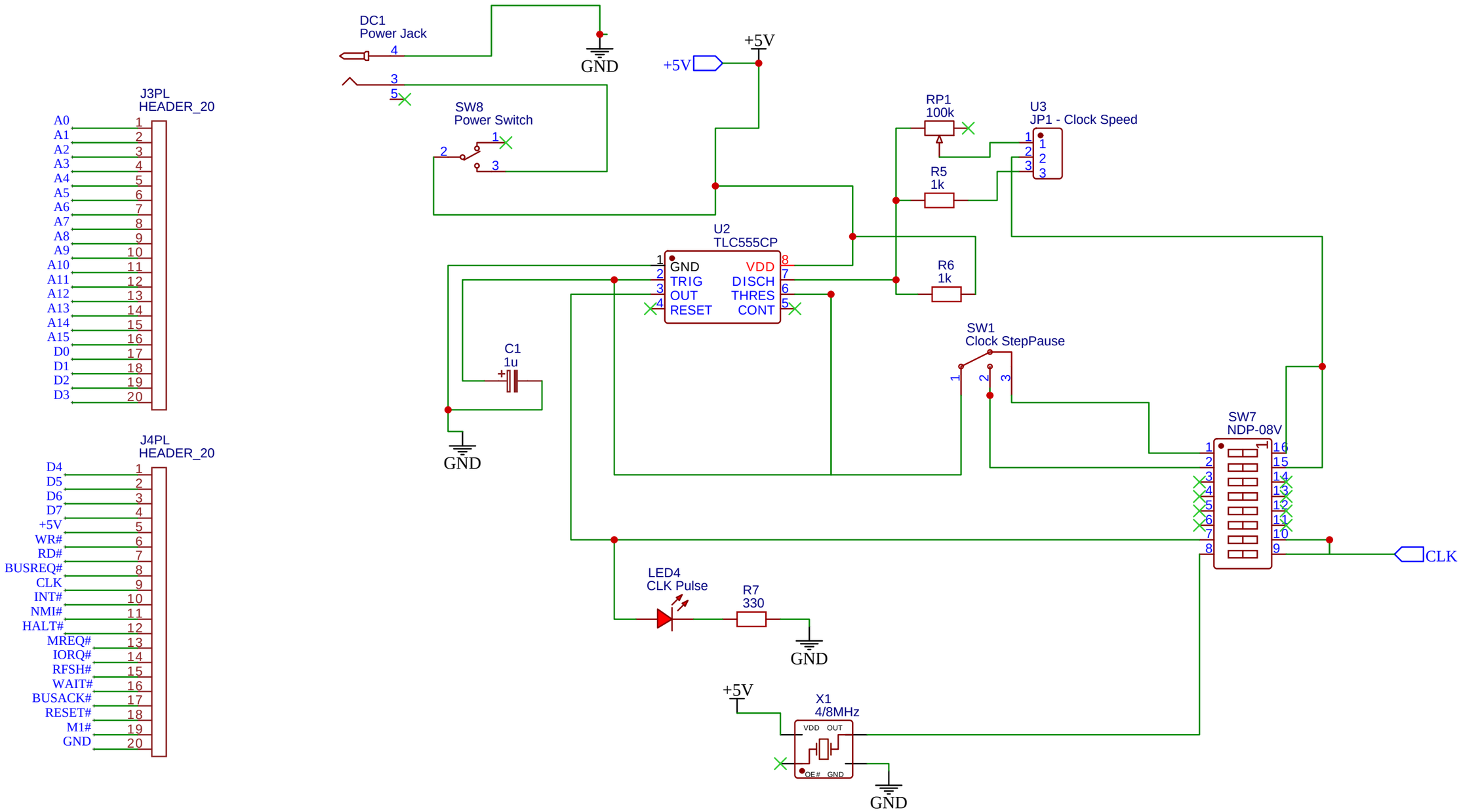

TITLE: Z80 System - Power Layer	REV: 1.0
EasyEDA — Company: kgroveshok	Sheet: 1/1
Date: 2022-03-21 Drawn By:	