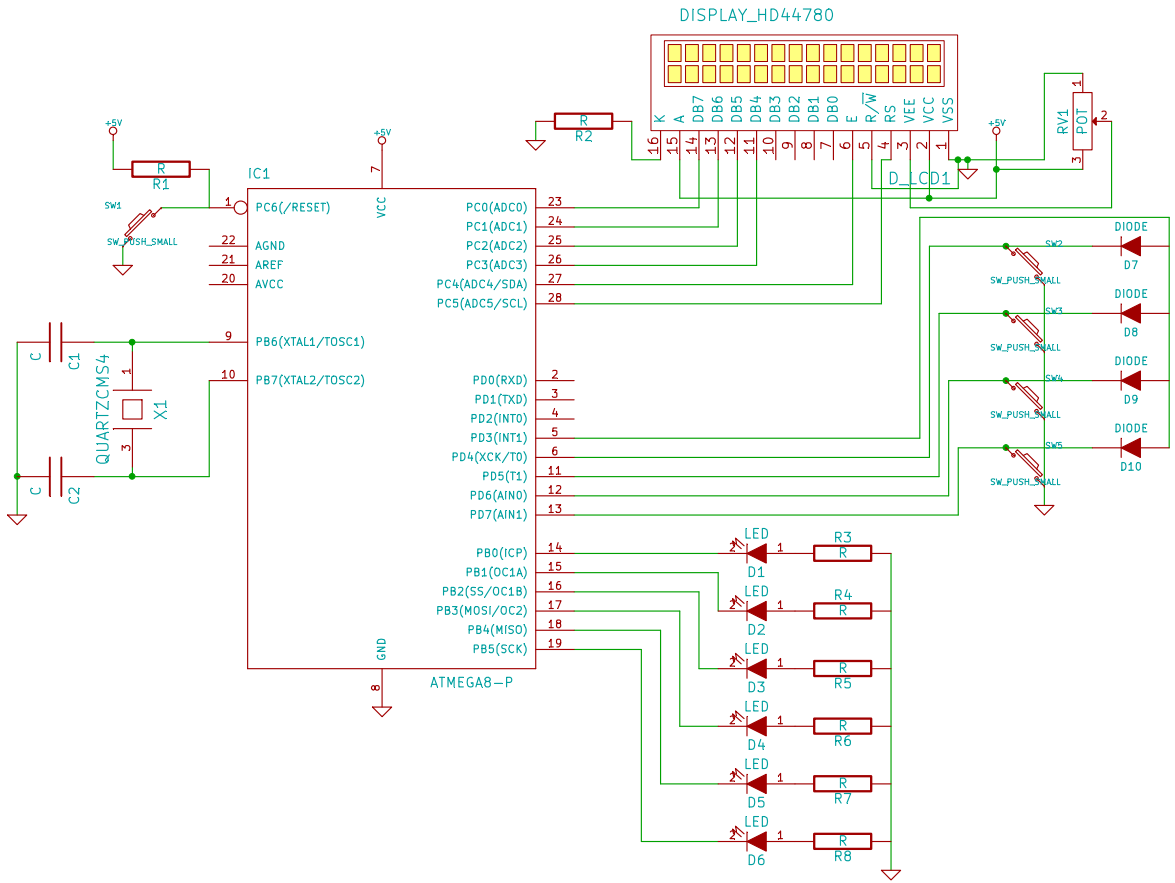

File: avr-lab01.sch		
Sheet: /		
Title: AVR-lab01		
Size: A4	Date: 24 aug 2010	**Rev:**
KiCad E.D.A. eeschema (2010-05-05 BZR 2356)-stable		Id: 1/1