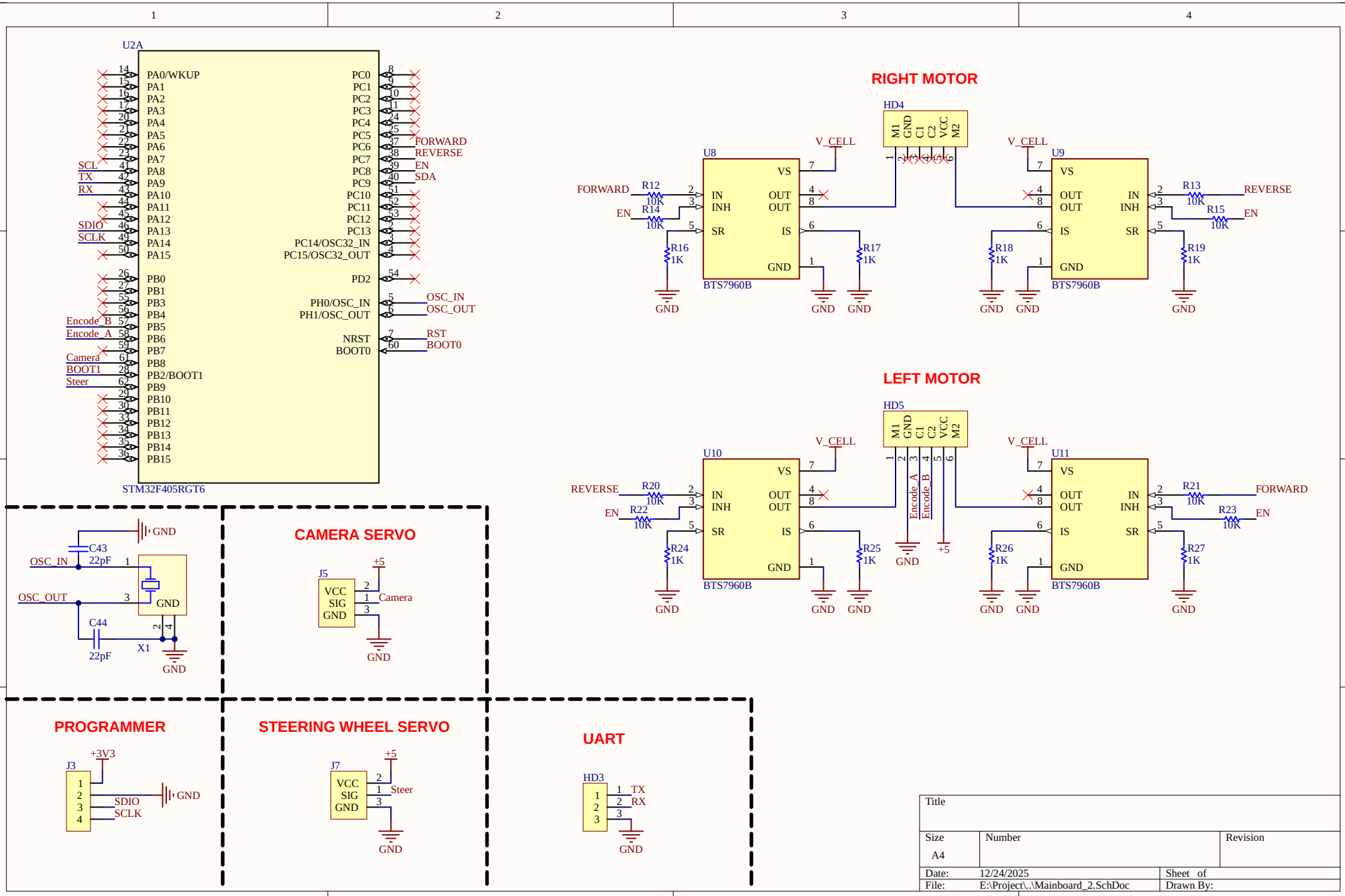
U2A
STM32F405RGT6
PA0/WKUP
PA1
PA2
PA3
PA4
PA5
PA6
PA7
PA8
PA9
PA10
PA11
PA12
PA13
PA14
PA15
PB0
PB1
PB3
PB4
PB5
PB6
PB7
PB8
PB2/BOOT1
PB9
PB10
PB11
PB12
PB13
PB14
PB15
PC0
PC1
PC2
PC3
PC4
PC5
PC6
PC7
PC8
PC9
PC10
PC11
PC12
PC13
PC14/OSC32_IN
PC15/OSC32_OUT
PD2
PH0/OSC_IN
PH1/OSC_OUT
NRST
BOOT0
SCL
TX
RX
SDIO
SCLK
Encode_B
Encode_A
Camera
BOOT1
Steer
FORWARD
REVERSE
EN
SDA
OSC_IN
OSC_OUT
RST
BOOT0
RIGHT MOTOR
HD4
M1 GND C1 C2 VCC M2
V_CELL
U8
U9
BTS7960B
VS
IN
INH
OUT
SR
IS
GND
R12 10K
R13 10K
R14 10K
R15 10K
R16 1K
R17 1K
R18 1K
R19 1K
LEFT MOTOR
HD5
U10
U11
Encode_A
Encode_B
+5
R20 10K
R21 10K
R22 10K
R23 10K
R24 1K
R25 1K
R26 1K
R27 1K
C43 22pF
C44 22pF
X1
CAMERA SERVO
J5
VCC
SIG
GND
Camera
PROGRAMMER
J3
+3V3
SDIO
SCLK
STEERING WHEEL SERVO
J7
Steer
UART
HD3
TX
RX
Title
Size
A4
Number
Revision
Date: 12/24/2025
File: E:\Project\..\Mainboard_2.SchDoc
Sheet of
Drawn By: