JETSON NANO PROTECTION CIRCUIT

****NOTE
** V_CELL cấp từ pin
** +5V cấp từ XL4015 mainboard

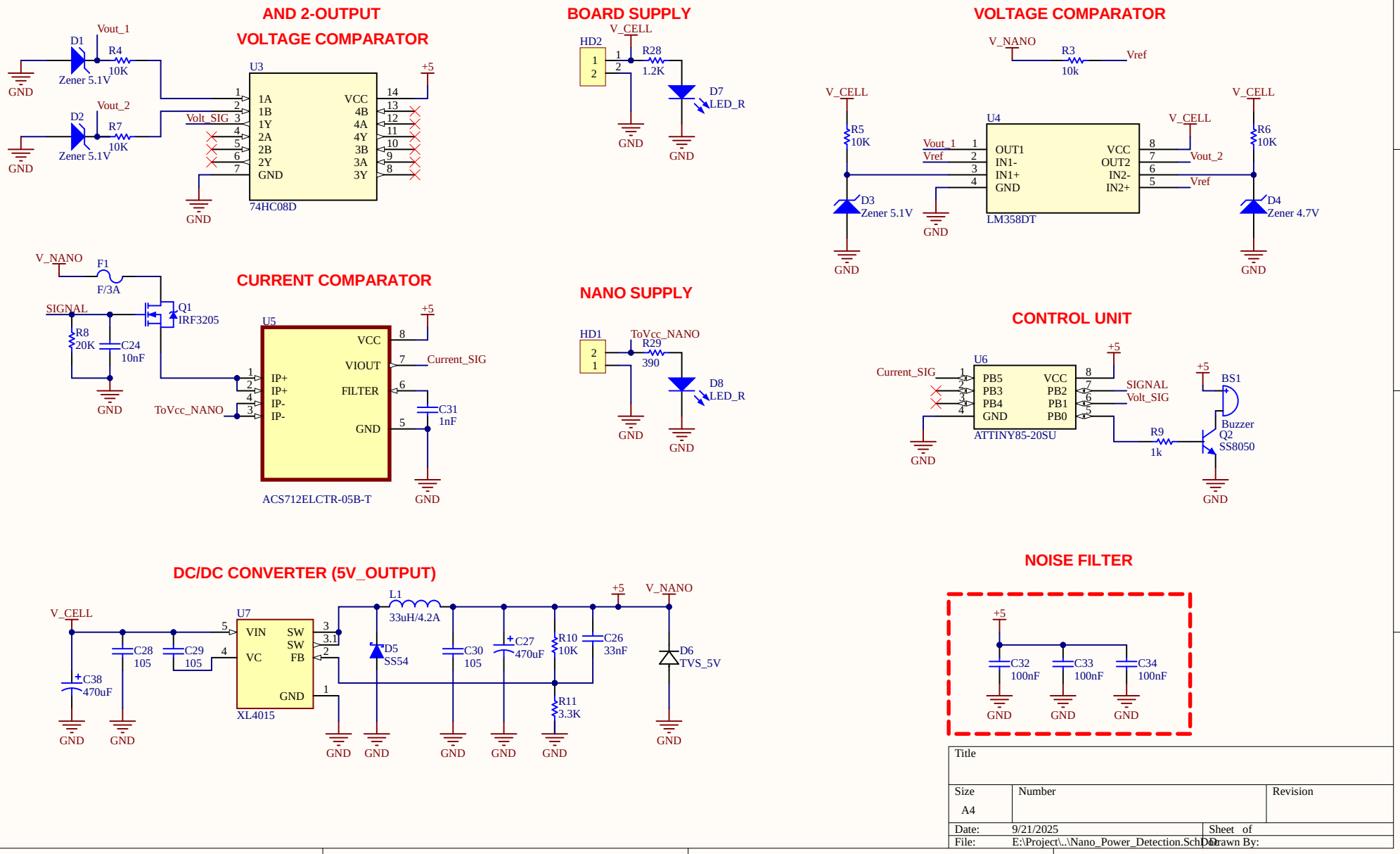

Title		
Size A4	Number	Revision
Date: 9/21/2025		Sheet of
File: E:\Project\..\Nano_Power_Detection.SchDoc		Drawn By: