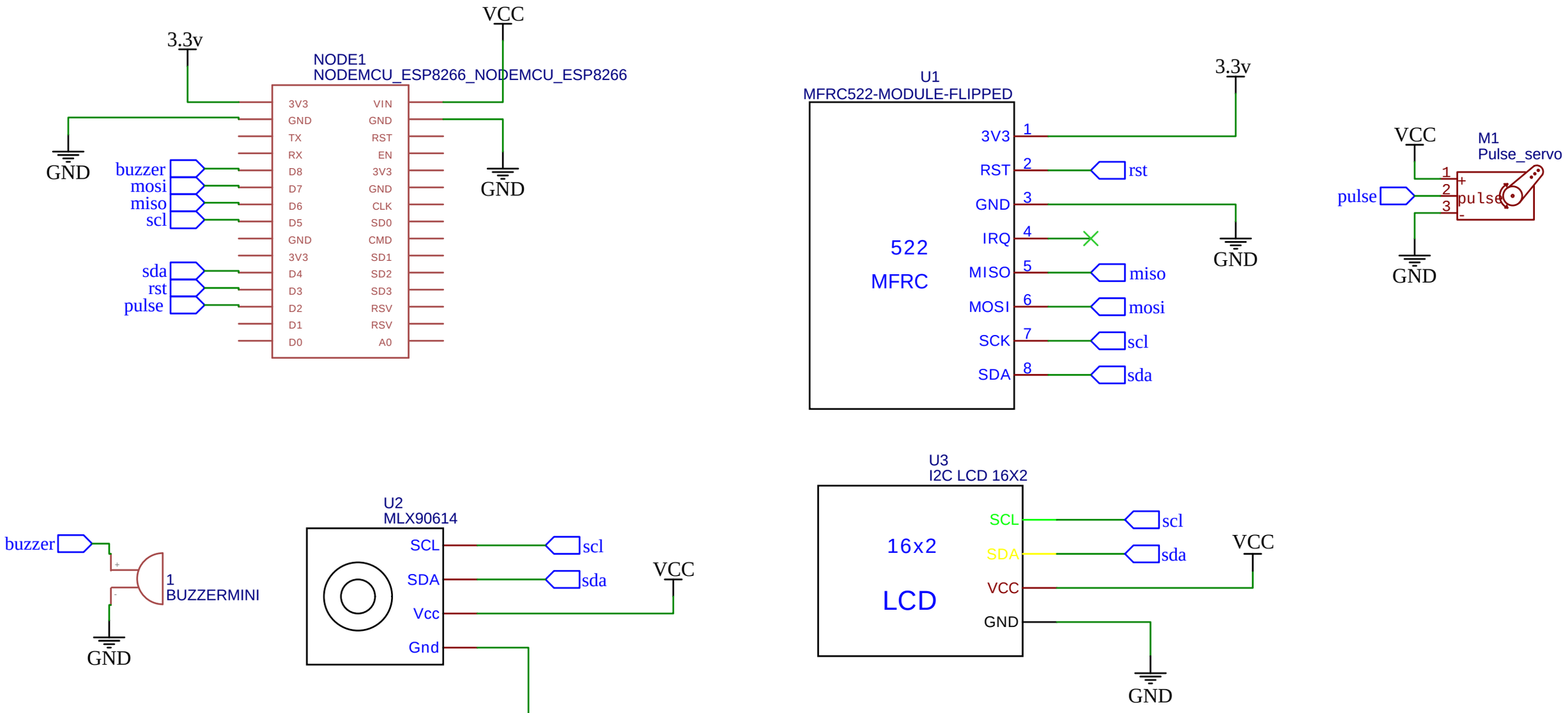

TITLE: rfid		REV: 1.0
嘉立创EDA	Company: Your Company	Sheet: 1/1
	Date: 2022-11-16 Drawn By: Christlight	