BEYTEC

... your gateway to success

Company / customer	BeyTec
Project description	Golden Poultry
Job number	Part II
Mounting location	Field 1

Technical data:

Operating voltage	400 V
Operating frequency	50 Hz
Operating current	
Power network	
Control voltage	24VDC
Protection class electrical	SK I
Degree of protection	IP54
Responsible for project	Willen

Created on	21.10.2019		
Edit date	12.12.2019	by (short name) willen	Number of pages 605

Table of contents

Column X: An automatically generated page was edited

F06_001_EN

Page	Page description	supplementary page field	Date	Edited by	X
++A1+F21&BAA/1	Title page / cover sheet		03.12.2019	willen	
++A1+F21&BAB/2	Table of contents : ++A1+F21&BAA/1 - =286++A1+F21&EFS/20		12.12.2019	willen	
++A1+F21&BPA/3	Summarized parts list : WAC.PAXS - ETN.M22-XGPV		12.12.2019	willen	X
++A1+F21&BPA/4	Summarized parts list : DOE.DRCBO3B16/0,03/1N-A - DOE.DLS6IC16		12.12.2019	willen	X
++A1+F21&ETL1/5	Panel layout		12.12.2019	willen	
=GB1++A1+F21&EFS/6	Power supply		12.12.2019	willen	
=GB2++A1+F21&EFS/7	Control voltage 230V AC		12.12.2019	willen	
=GD1++A1+F21&EFS/8	Control voltage 24V DC		12.12.2019	willen	
=GD1++A1+F21&EFS/9	Control voltage 24V DC		12.12.2019	willen	
=F01++A1+F21&EFS/10	Emergency stop		12.12.2019	willen	
=E01++A1+F21&EFS/11	Control cabinet lighting		12.12.2019	willen	
=E01++A1+F21&EFS/12	Control cabinet lighting		12.12.2019	willen	
=E01++A1+F21&EFS/13	switch cabinet ventilation		12.12.2019	willen	
=0++A1+F21&EFS/14	Control voltage fields 2 - 4		12.12.2019	willen	
=0++A1+F21&EFS/15	Control voltage fields 5 - 7		12.12.2019	willen	
=0++A1+F21&EFS/16	Control voltage fields 8 - 9		12.12.2019	willen	
=0++A1+F21&EFS/17	Power supply		12.12.2019	willen	
=284++A1+F21&EFS/18	Bagging		12.12.2019	willen	
=285++A1+F21&EFS/19	Sewing machine		12.12.2019	willen	
=286++A1+F21&EFS/20	belt		12.12.2019	willen	

Summarized parts list

F02_002_en_US

Order number	Quantity	Designation	Type number	Supplier
	1	Digitalanzeige für Dehnungsmeßstreifen PAXS	PAXS001 0/B: 1	Wachendorff
K3HB-CPB 24VAC/VDC	2	Digital panel indicators, 1/8 DIN advanced indicators, K3HB-C, -P, -R	K3HB-CPB 24VAC/VDC	OMR
1SVR730824R9300	1	CM-PFS.S Three-phase monitoring relay	CM-PFS.S	
09916109	1	LS-Schalter B6A / 3pol	DLS6iB06-3	DOEPKE
101457	4	Busbar adapter, 55mm, 63A, 1TS	BBA4-63	ETN
	0			
265759	1	Circuit-breaker, 3p, 800A	NZMN4-AE800	ETN
9342300	1	SV Connection adaptor, 800 A, 690 V, 3-pole, cable outet bottom	SV.9342300	RIT
2277145	3	Current transformer	PACT MCR-V2-4012- 70- 800-5A-1	PXC
09916197	1	LS- Schalter C4 / 1-pol	DLS 6I C04	Doepke
09917985	1	Auxilliary contact, 1N/O+1N/C, integrated	DHi4	DOEPKE
088912	1	Transformer-protective circuit-breaker, 3p, Ir=1-1.6A, screw connection	PKZM0-1,6-T	ETN
082882	1	Standard auxiliary contact, 1N/O+1N/C, flush mounting, screw connection	NHI-E-11-PKZ0	EATON
101451	1	Busbar adapter, 45mm, 25A, 1TS	BBA0-25	ETN
STE 500/4/23	1	control- and isolation transformer 500 VA - pri.: 400V // sec.: 230V	STE 500/4/23	BLO
09916113	1	LS-Schalter B16A / 3pol	DLS6iB16-3	DOEPKE
716401	12	Elektronische Lastüberwachung bis DC 10 A	LOCC-Box-FB 7-6401	LUETZE
2903156	1	Power supply unit	TRIO-PS-2G/3AC/24DC/40	PHOENIX
	1			
2963912	1	Safety relays	PSR-SCP- 24UC/ESAM4/8X1/1X2	PHOENIX
216376	1	Contact element, 1N/O, front mount, 6. contact, screw connection	M22-K10	EATON
216925	1	Illuminated pushbutton actuator, flush, red, momentary	M22-DL-R	EATON
	2	Mounting adapter	M22-A	EATON
216392	1	Schildträger	M22S-ST-X	EATON
216558	1	LED element, red, front mount, 12-30VAC/DC	M22-LED-R	ETN
216378	2	Contact element, 1 N/C, front mount, 6. contact, screw connection	M22-K01	EATON
216876	1	Emergency-Stop actuator, non-illuminated	M22-PV	EATON
231273	1	Guard-ring, emergency switching off	M22-XGPV	EATON

Summarized parts list

F02_002_en_US

Order number	Quantity	Designation	Type number	Supplier
09932104	1	FI/LS-Schalter 1p+N B16 0,03mA	DRCBO 3 B16/0,03/1N-A	DOEPKE
2702226	1	LED enclosure light	PLD E 608 W 315/F	PXC
3240100	2	SK TopTherm fan-and-filter unit, 180/160 m³/h, 230 V, 1~, 50/60 Hz	SK.3240100	RITTAL
3240200	2	SK Outlet filter, for fan-and-filter units, WHD: 255x255x25 mm	SK.3240200	RIT
7T.81.0.000.2303	1	Panel thermostat, 1 pole, 10 A - NO (nPDT-NO) - (0...+60)°C	7T.81.0.000.2303	FIN
09916298	1	LS- Schalter C50 / 3-pol	DLS 6I C50-3	Doepke
09914203	1	LS-Schalter C16A / 1pol	DLS6hC16-16KA	DOEPKE
4970765	1	LS-Schalter B16A / 1pol	DLS6HB16-16KA	DOEPKE
4970886	3	LS- Schalter C16 / 3-pol	DLS 6I C16-3	Doepke

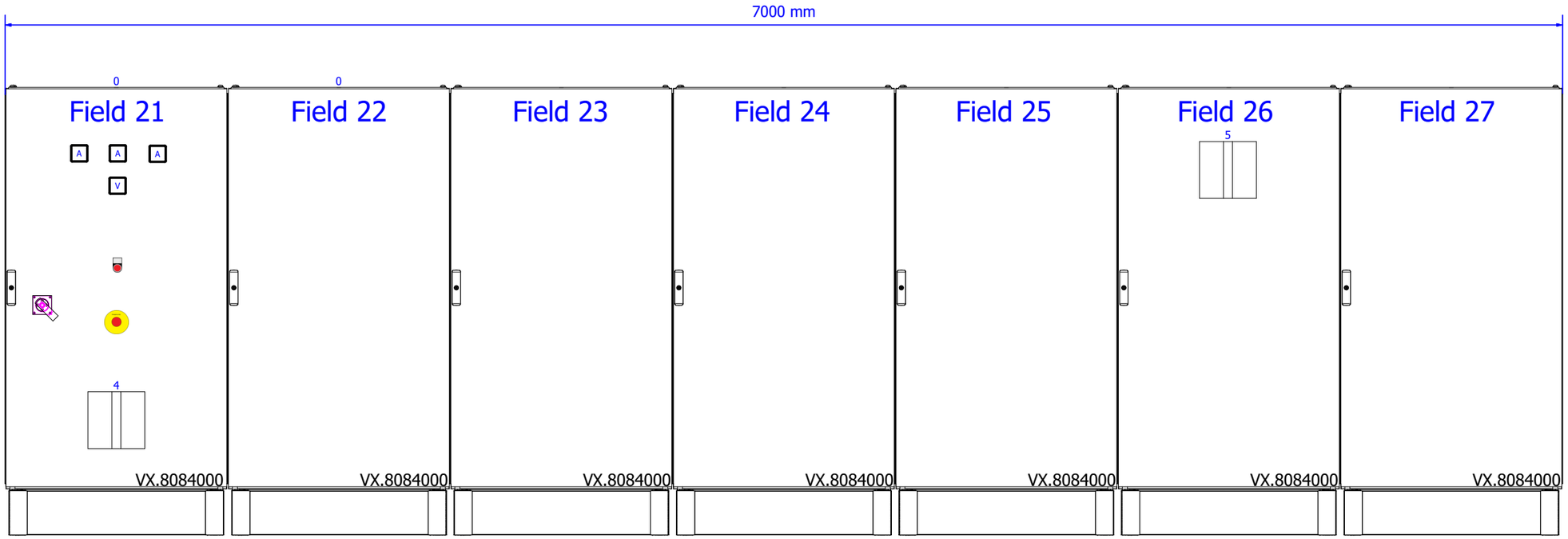

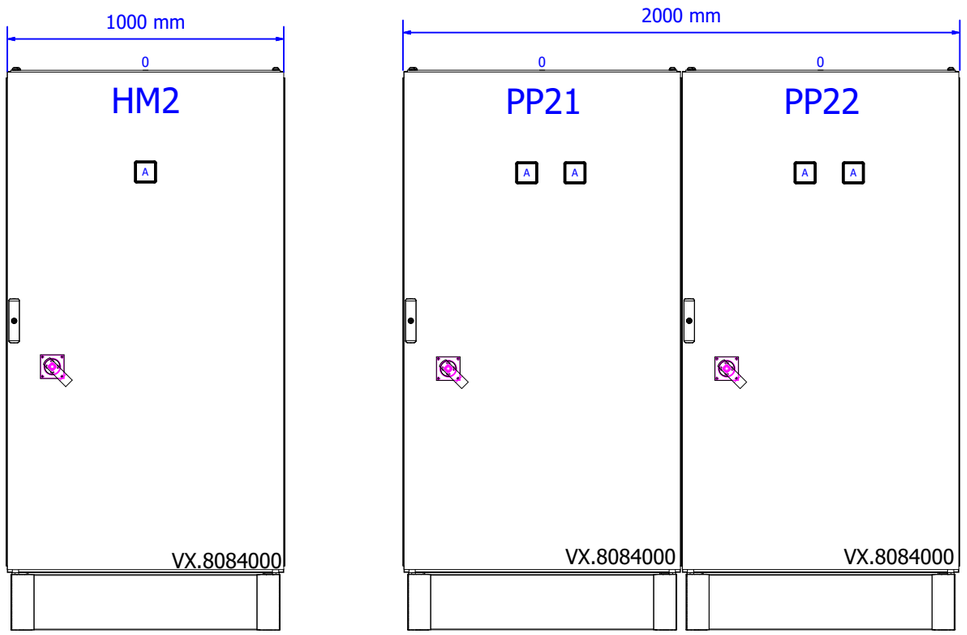

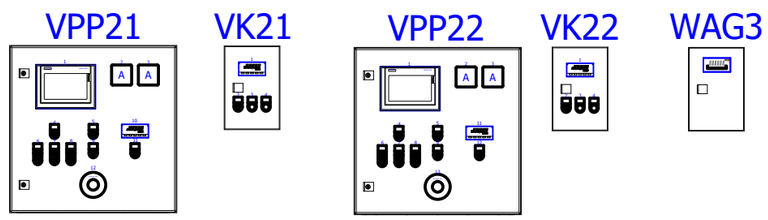

&BPA/4

+F22&BAA/21

			Date	12.12.2019	Mixed feed plant Golden Poultry	BEYTEC ... your gateway to success	Panel layout
			Ed.	willen			
			Appr		Field 1		
Modification	Date	Name	Original	V:\EPLAN\Projekte\Company\Alsad\Beytec\2018\Feed Mill Alssad.elk	Replaced by		

=
+ F21

1 : 22 | Part II | Page 5 | Page 605

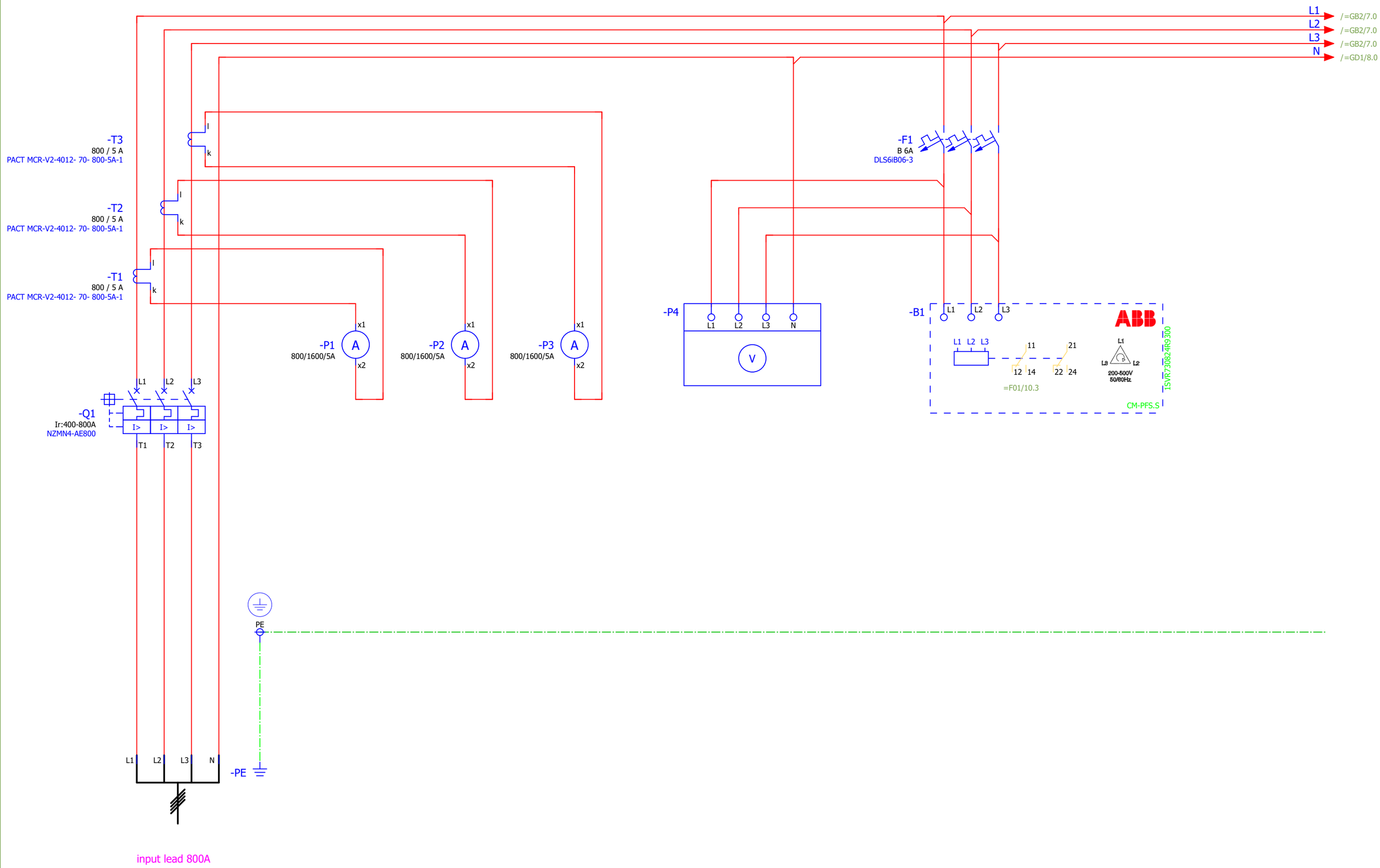

=++A3+HM2&ETL1/494

++A2+PP21/517

			Date	12.12.2019	Mixed feed plant Golden Poultry	BEYTEC ... your gateway to success	Power supply
			Ed.	willen			
			Appr		Field 1		
Modification	Date	Name	Original	V:\EPLAN\Projekte\Company\Replace\Beytec\2018\Feed Mill Alssad.elk	Replaced by		

= GB1
+ F21

1 : 1 | Part II | Page 6 | Page 605

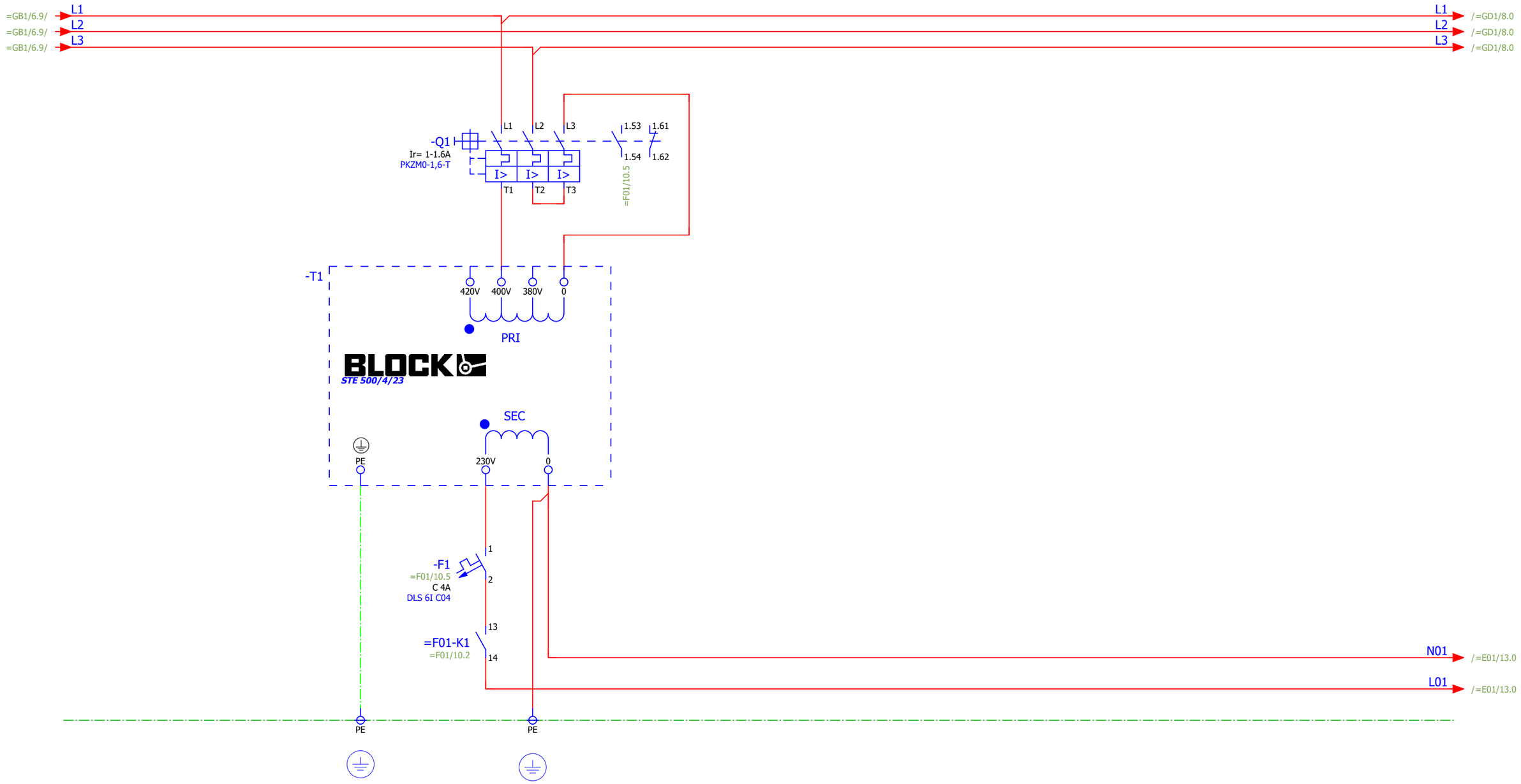

230VAC power supply unit

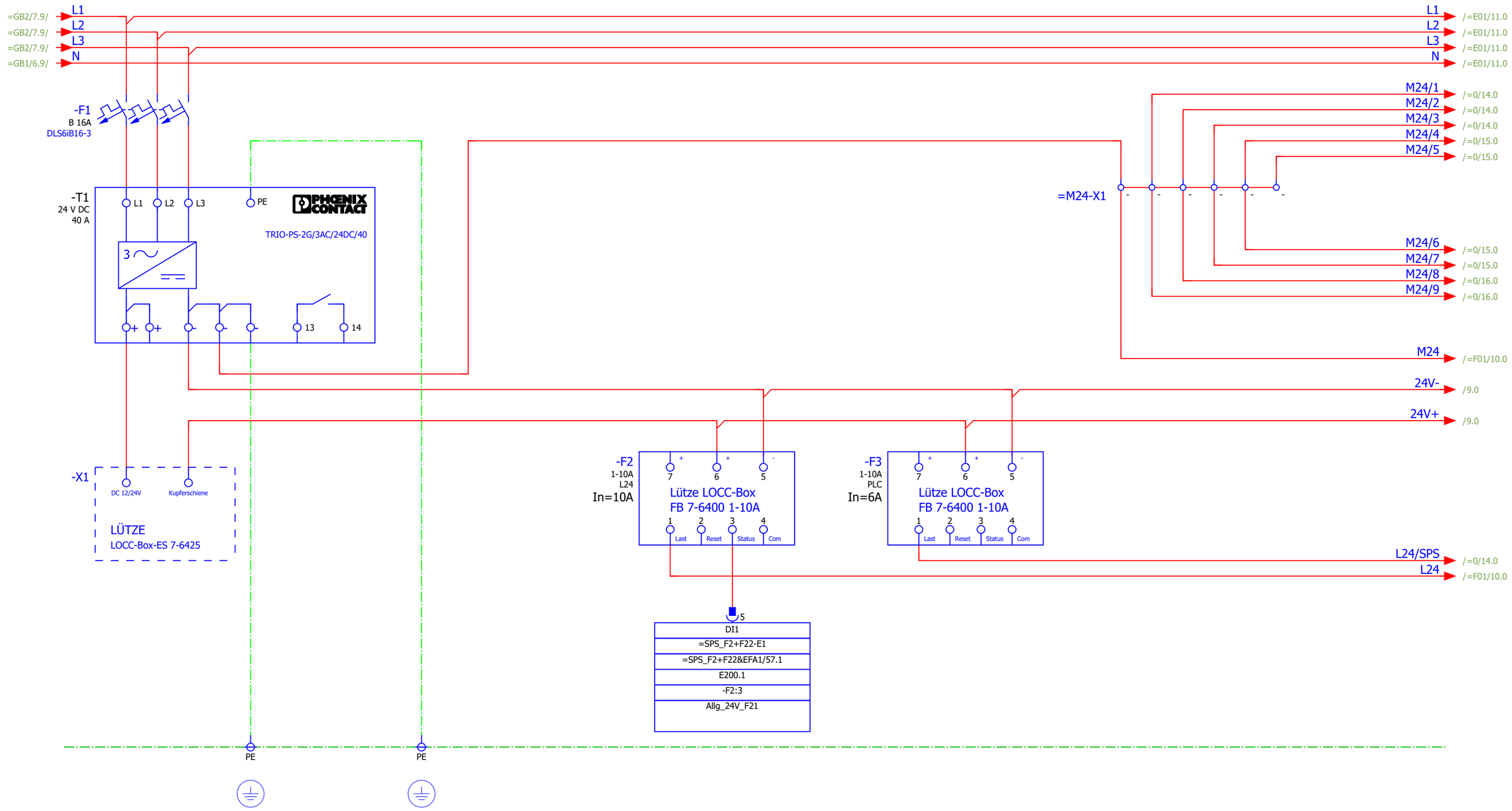

24VDC power supply unit

Control voltage 24VDC

power supply PLC 24VDC

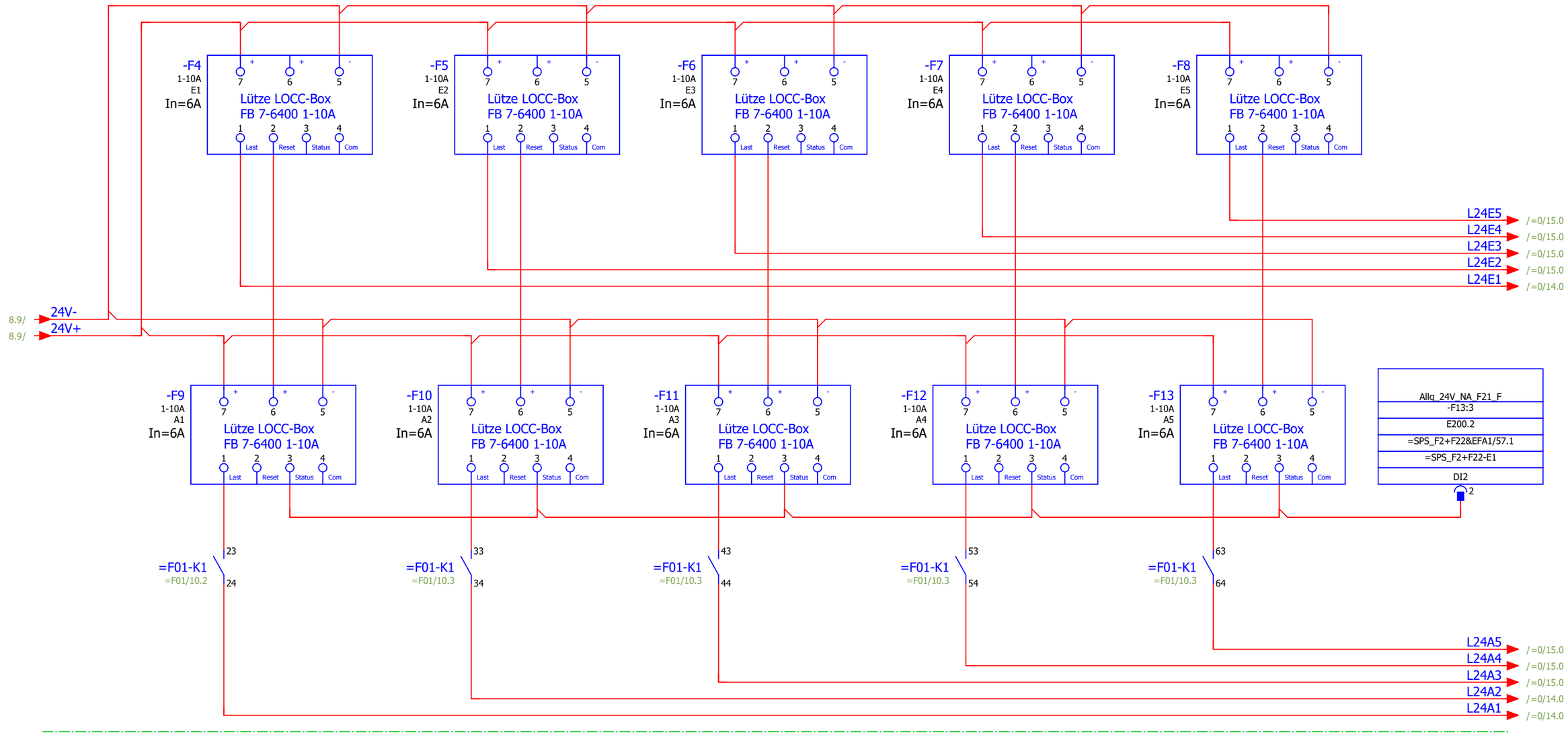
-F4
1-10A
E1
In=6A
-F5
1-10A
E2
In=6A
-F6
1-10A
E3
In=6A
-F7
1-10A
E4
In=6A
-F8
1-10A
E5
In=6A
Lütze LOCC-Box
FB 7-6400 1-10A
Last
Reset
Status
Com
L24E5
L24E4
L24E3
L24E2
L24E1
/=0/15.0
/=0/14.0
8.9/
24V-
24V+
-F9
1-10A
A1
In=6A
-F10
1-10A
A2
In=6A
-F11
1-10A
A3
In=6A
-F12
1-10A
A4
In=6A
-F13
1-10A
A5
In=6A
Allg_24V_NA_F21_F
-F13:3
E200.2
=SPS_F2+F22&EFA1/57.1
=SPS_F2+F22-E1
DI2
=F01-K1
=F01/10.2
=F01/10.3
23
24
33
34
43
44
53
54
63
64
L24A5
L24A4
L24A3
L24A2
L24A1

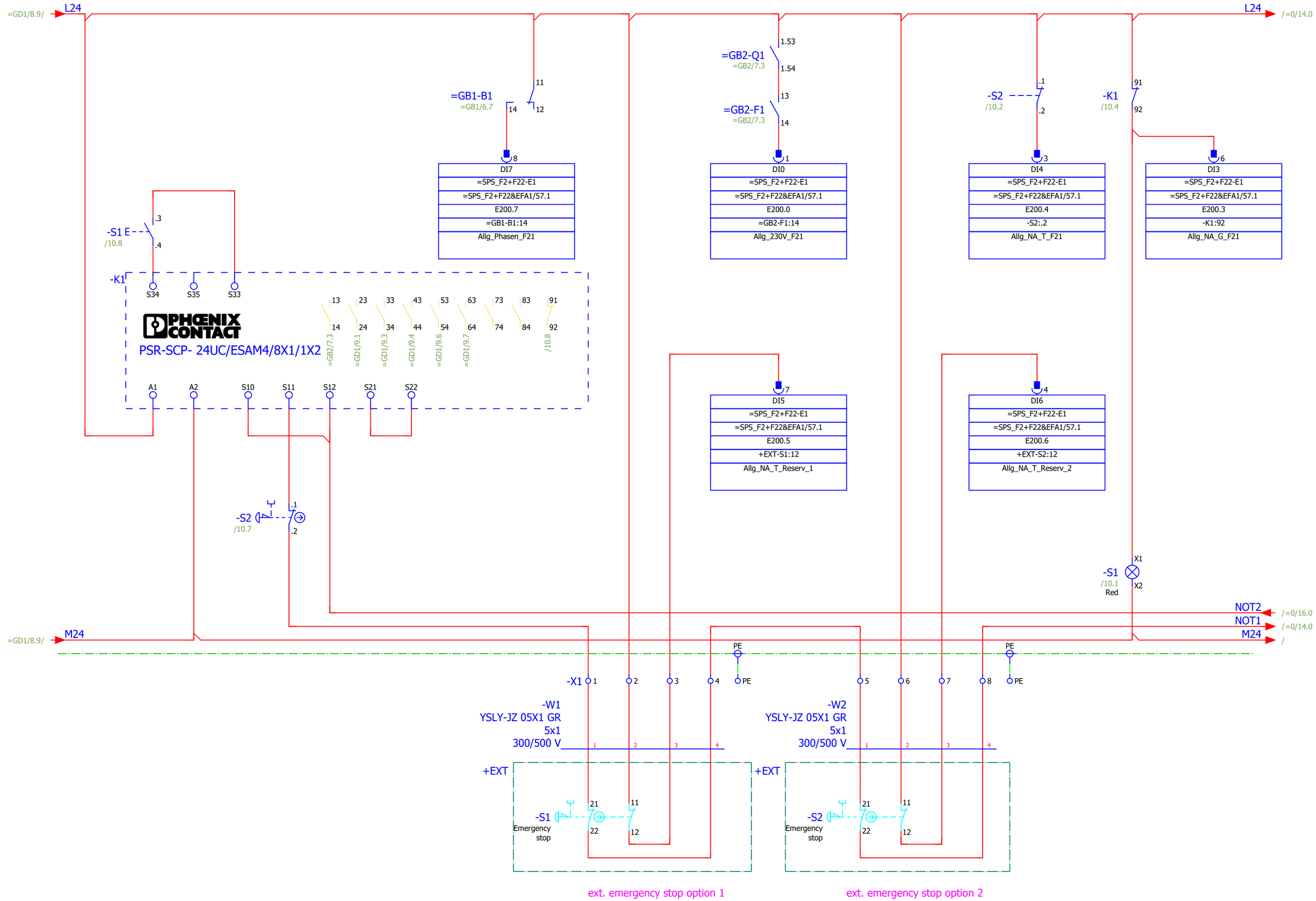

=GD1/9

=E01/11

			Date	12.12.2019	Mixed feed plant Golden Poultry	BEYTEC ... your gateway to success	Emergency stop	= F01	
			Ed.	willen				+ F21	
			Appr		Field 1			1 : 1	Part II
Modification	Date	Name	Original	V:\EPLAN\Projekte\Company Replace\Beytec\2018\Feed Mill Alssad.elk	Replaced by			Page 10	Page 605

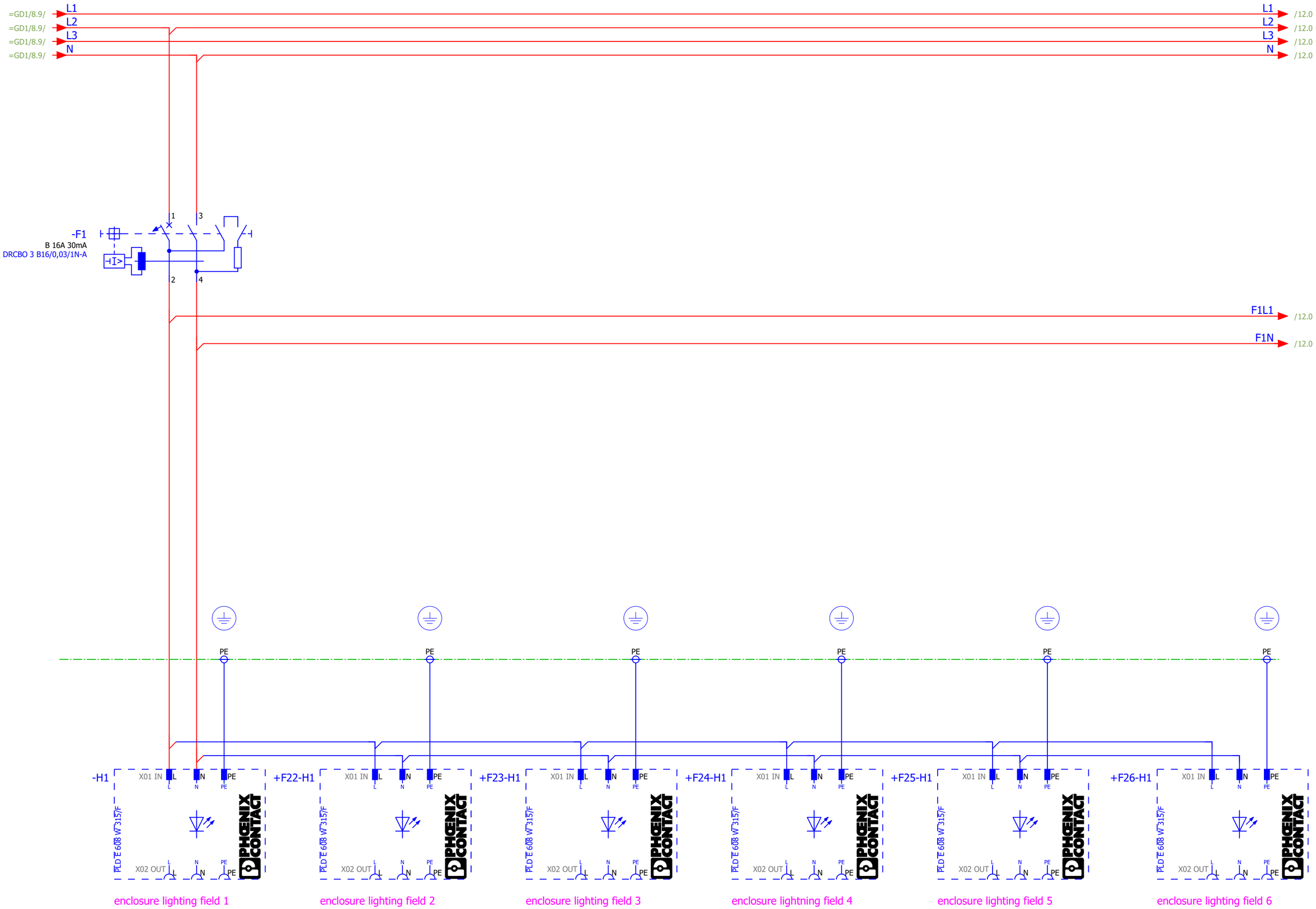
=GD1/8.9/ L1
=GD1/8.9/ L2
=GD1/8.9/ L3
=GD1/8.9/ N
L1 /12.0
L2 /12.0
L3 /12.0
N /12.0
-F1
B 16A 30mA
DRCBO 3 B16/0,03/1N-A
F1L1 /12.0
F1N /12.0
PE
-H1
+F22-H1
+F23-H1
+F24-H1
+F25-H1
+F26-H1
X01 IN
X02 OUT
enclosure lighting field 1
enclosure lighting field 2
enclosure lighting field 3
enclosure lightning field 4
enclosure lighting field 5
enclosure lighting field 6

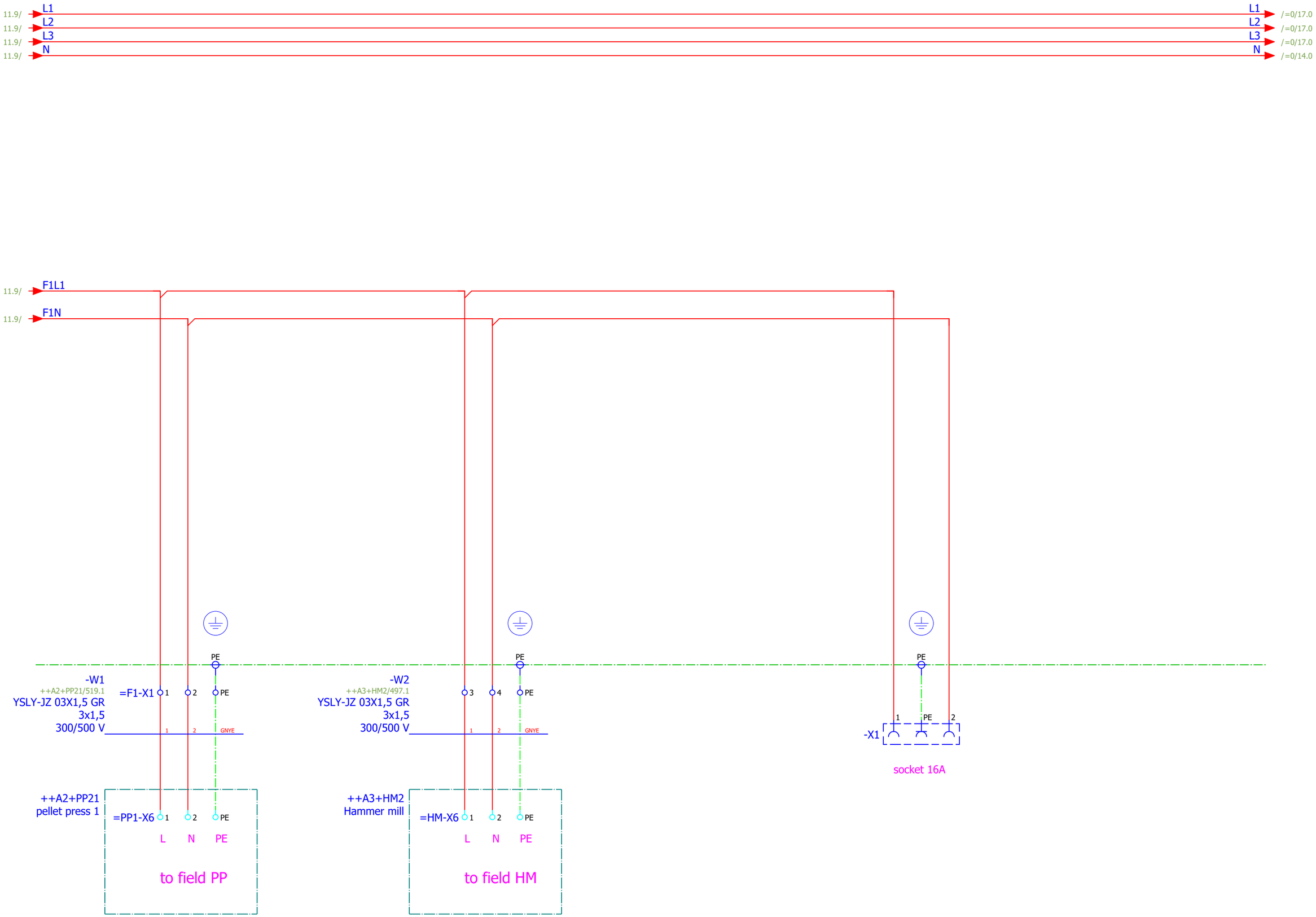

11

13

			Date	12.12.2019	Mixed feed plant Golden Poultry	BEYTEC ... your gateway to success	Control cabinet lighting	= E01	
			Ed.	willen				+ F21	
			Appr		Field 1			1 : 1 Part II	Page 12
Modification	Date	Name	Original	V:\EPLAN\Projekte\Company\Replace\Beytec\2018\Feed Mill Alssad.elk	Replaced by				Page 605

Replace(Beytec)

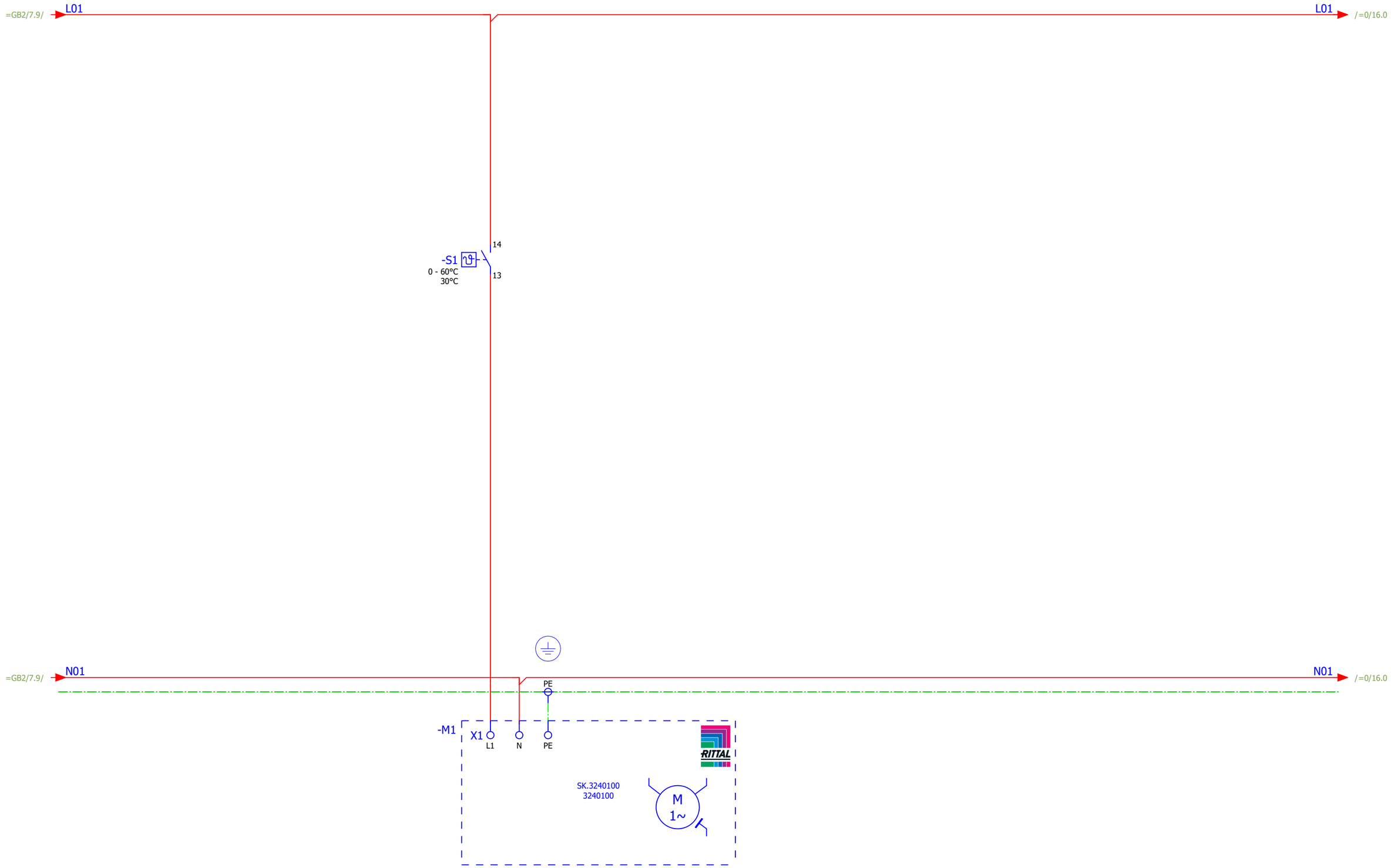

Switch cabinet fan

++A2+PP21/519

			Date	12.12.2019	Mixed feed plant Golden Poultry	BEYTEC ... your gateway to success	switch cabinet ventilation
			Ed.	willen			
			Appr		Field 1		
Modification	Date	Name	Original	V:\EPLAN\Projekte\Company\Replace\Beytec\2018\Feed Mill Alssad.elk	Replaced by		

= E01
+ F21

1 : 1 | Part II | Page 13 | Page 605

Replace Beytec

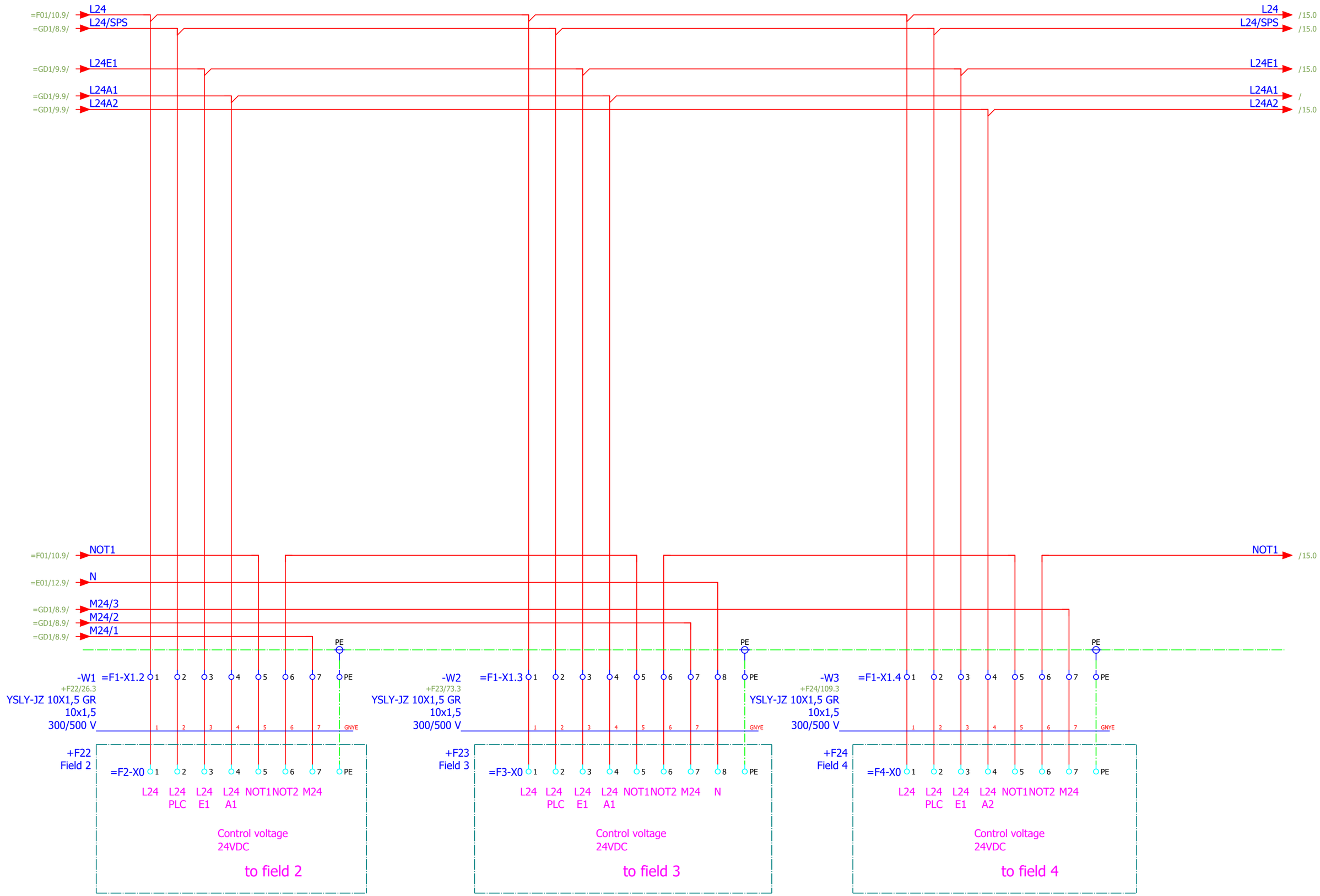

=E01++A3+HM2/497

15

			Date	12.12.2019	Mixed feed plant Golden Poultry	BEYTEC ... your gateway to success	Control voltage fields 2 - 4	= 0
			Ed.	willen				+ F21
			Appr		Field 1		1 : 1	Part II
Modification	Date	Name	Original	V:\EPLAN\Projekte\Company\Replace\Beytec\2018\Feed Mill Alssad.elk	Replaced by			Page 14 / Page 605

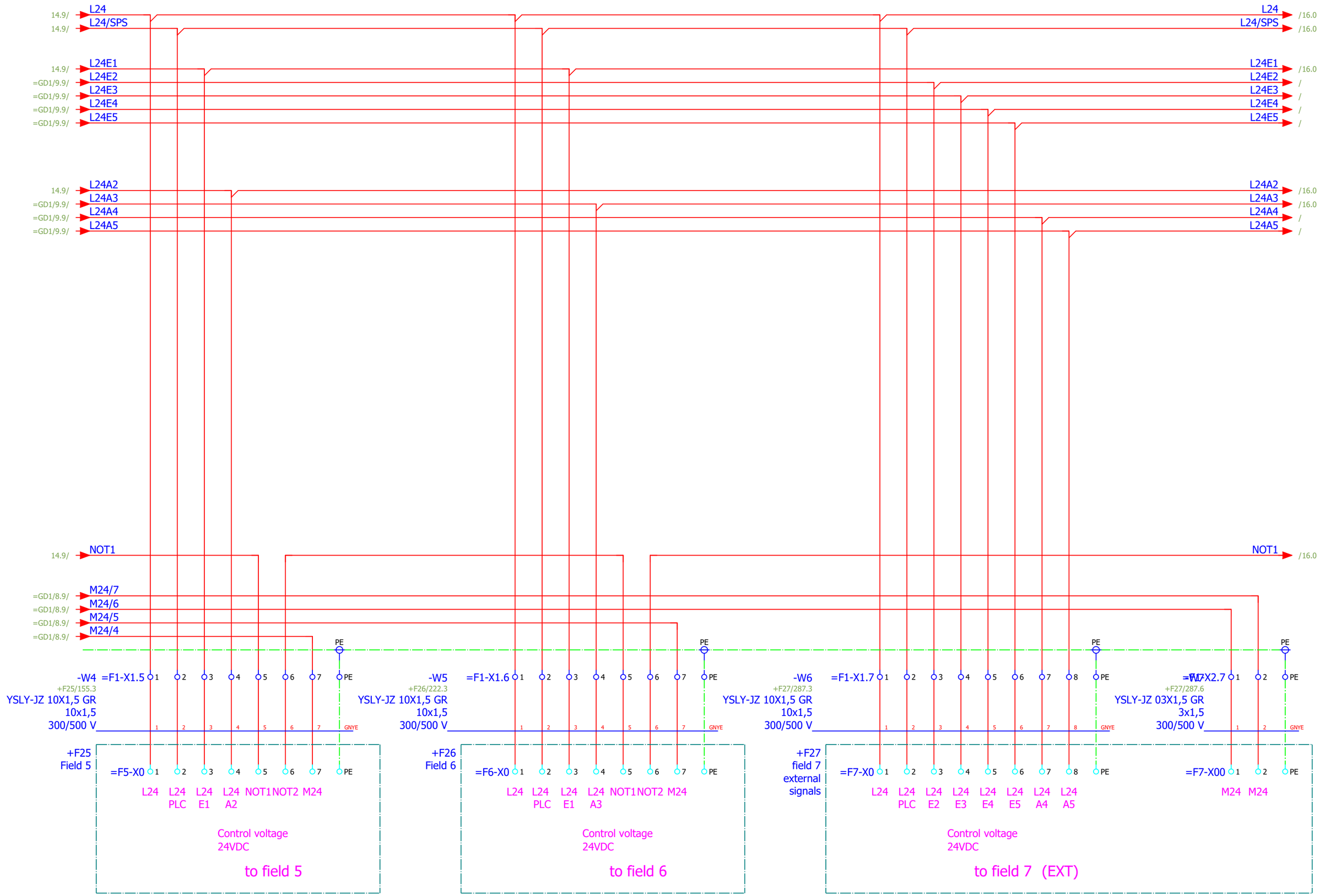

14 16

			Date	12.12.2019	Mixed feed plant Golden Poultry	BEYTEC ... your gateway to success	Control voltage fields 5 - 7	= 0	
			Ed.	willen				+ F21	
			Appr		Field 1			1 : 1 Part II	Page 15
Modification	Date	Name	Original	V:\EPLAN\Projekte\Company\Replace\Beytec\2018\Feed Mill Alssad.elk	Replaced by				Page 605

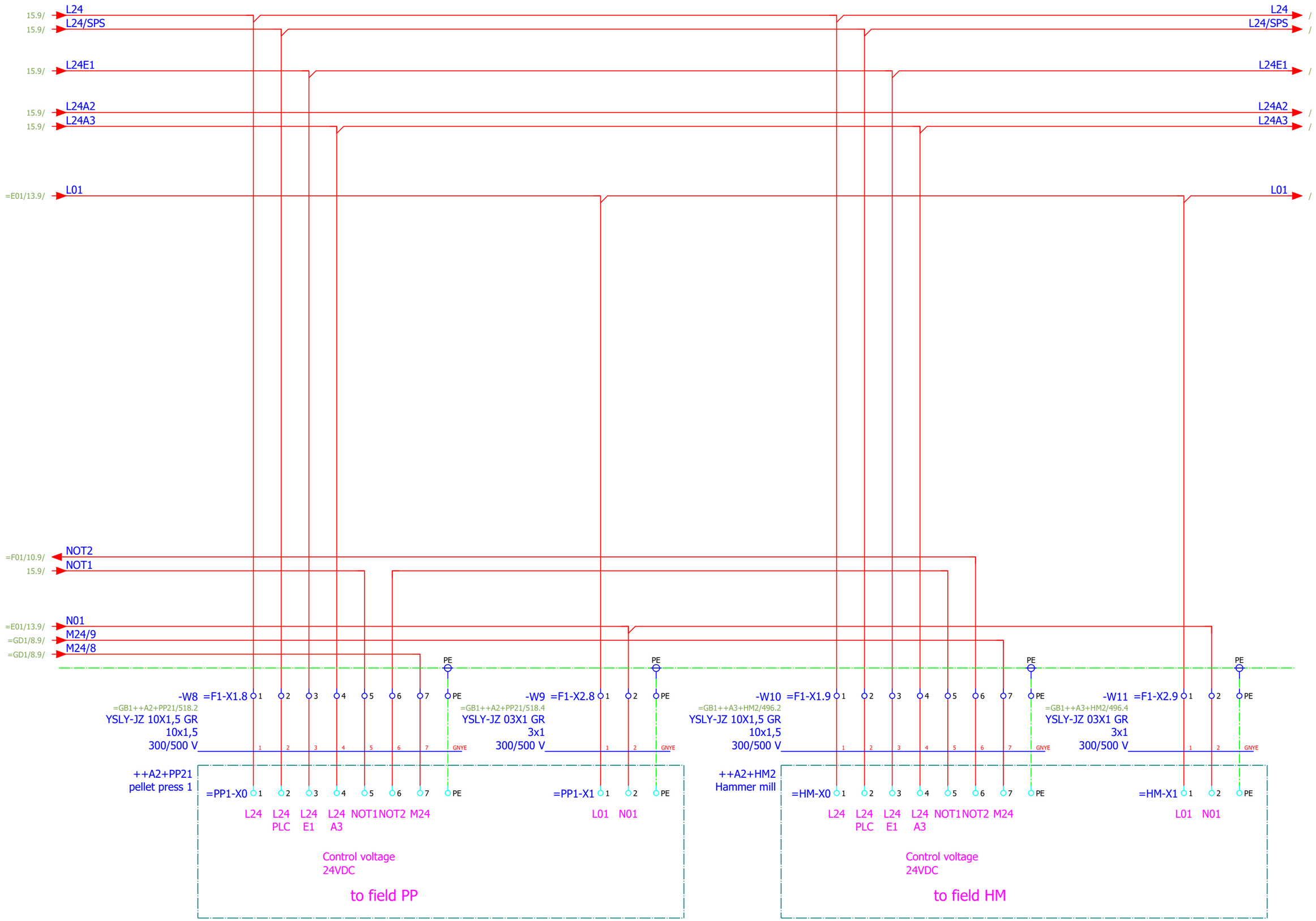

15 17

			Date	12.12.2019	Mixed feed plant Golden Poultry	BEYTEC ... your gateway to success	Control voltage fields 8 - 9	= 0	
			Ed.	willen				+ F21	
			Appr		Field 1			1 : 1 Part II	Page 16
Modification	Date	Name	Original	V:\EPLAN\Projekte\Company\Replace\Beytec\2018\Feed Mill Alssad.elk	Replaced by				Page 605

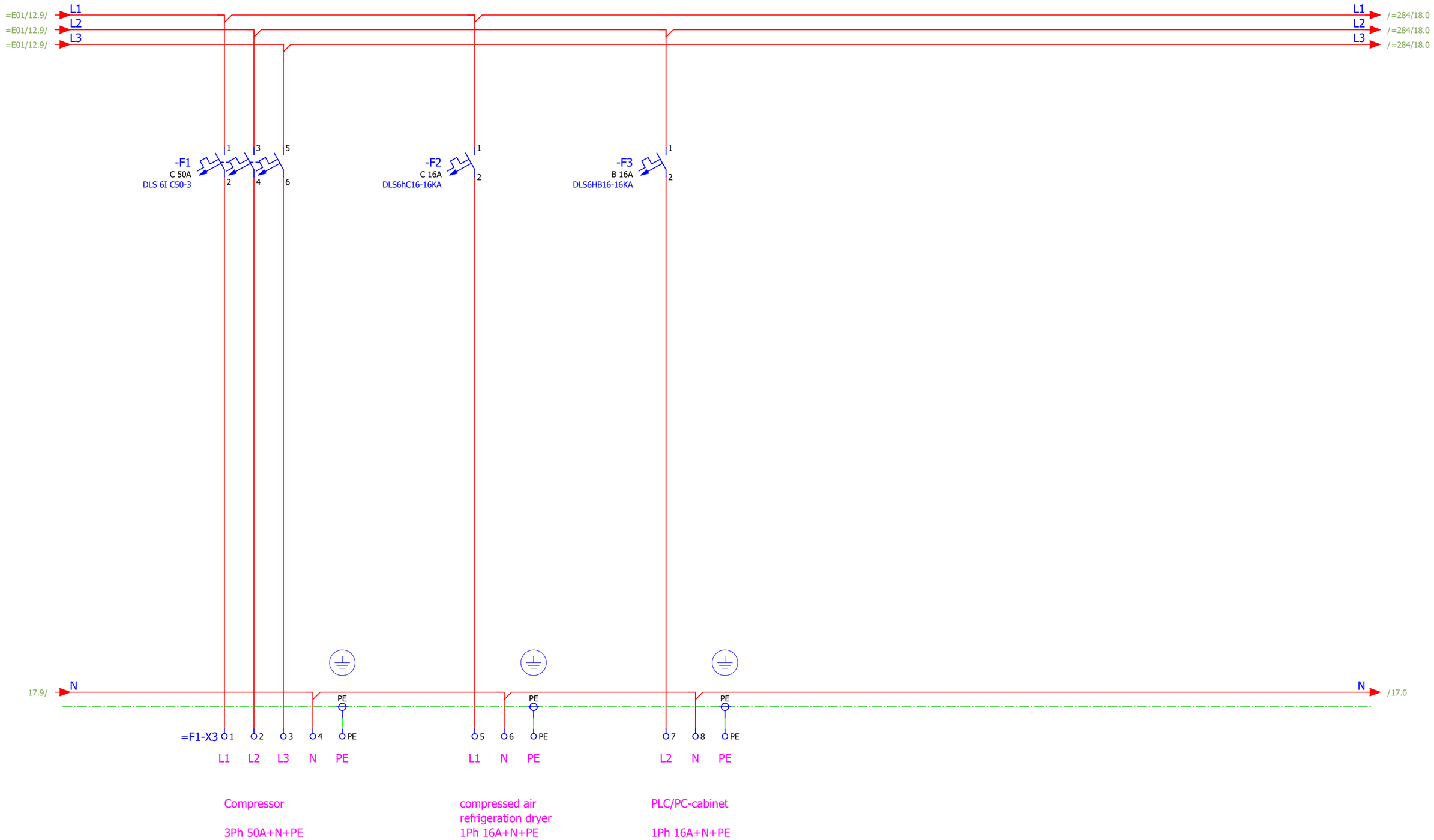

			Date	12.12.2019	Mixed feed plant Golden Poultry	BEYTEC ... your gateway to success	Power supply	= 0	
			Ed.	willen				+ F21	
			Appr		Field 1			1 : 1 Part II	Page 17
Modification	Date	Name	Original	V:\EPLAN\Projekte\Company\Replace\Beytec\2018\Feed Mill Alssad.elk	Replaced by				Page 605

Replace Beytec

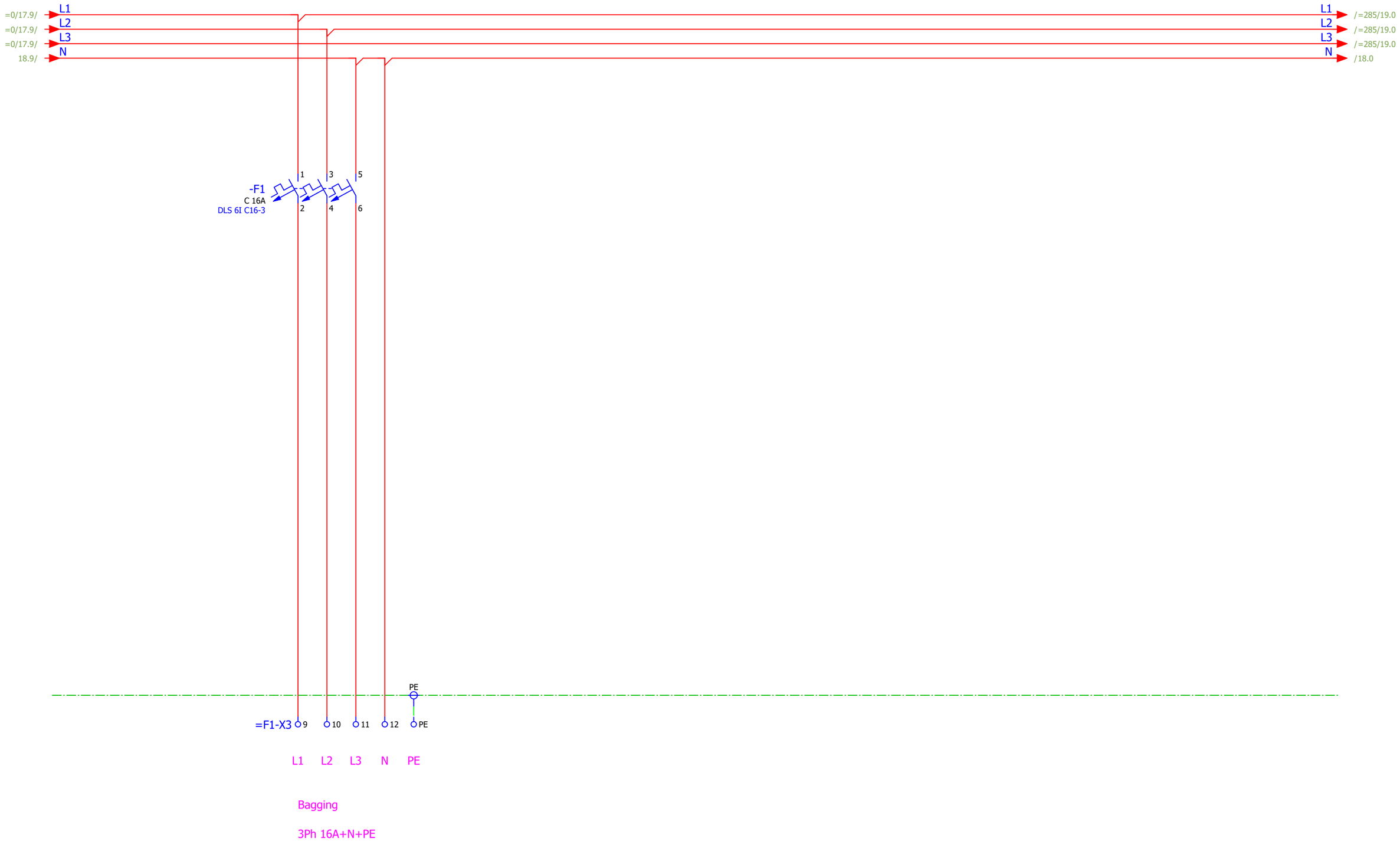
=0/17.9/
L1
=0/17.9/
L2
=0/17.9/
L3
18.9/
N
L1
/=285/19.0
L2
/=285/19.0
L3
/=285/19.0
N
/18.0
-F1
C 16A
DLS 6I C16-3
1
3
5
2
4
6
PE
=F1-X3
9
10
11
12
PE
L1
L2
L3
N
PE
Bagging
3Ph 16A+N+PE

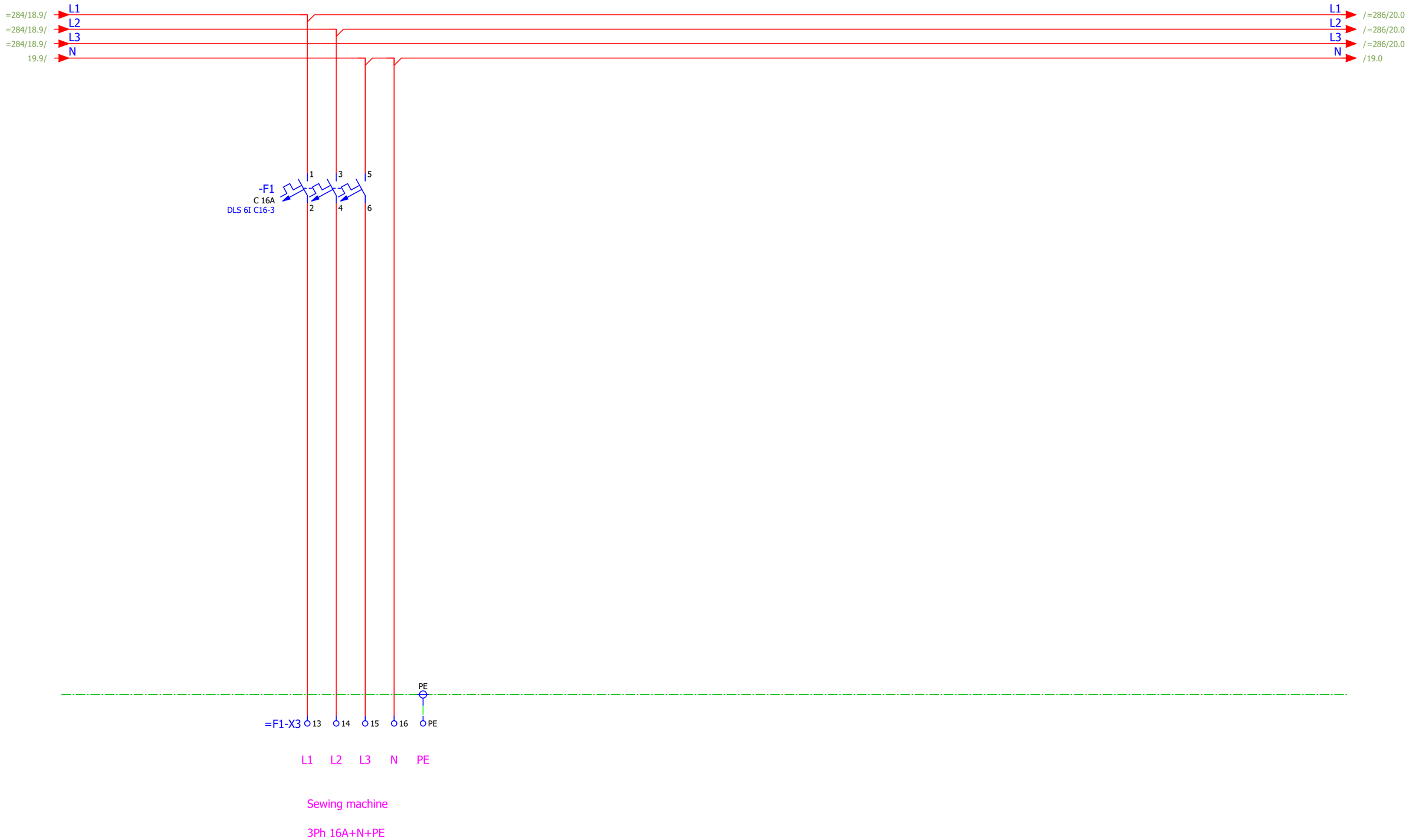
=284/18.9/ L1
=284/18.9/ L2
=284/18.9/ L3
19.9/ N
L1 /=286/20.0
L2 /=286/20.0
L3 /=286/20.0
N /19.0
-F1
C 16A
DLS 6I C16-3
1 3 5
2 4 6
PE
=F1-X3 13 14 15 16 PE
L1 L2 L3 N PE
Sewing machine
3Ph 16A+N+PE

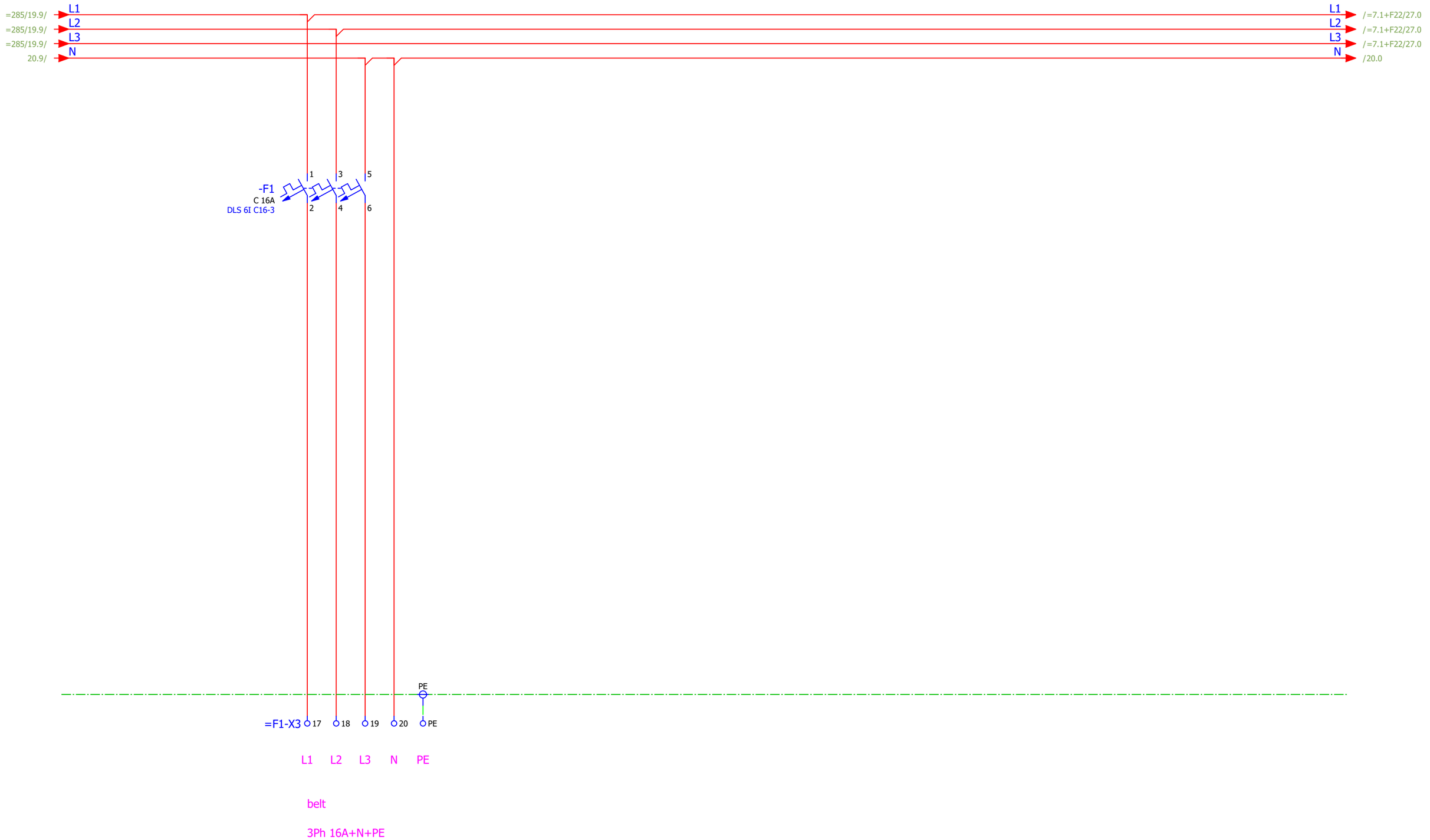
=285/19.9/
L1
=285/19.9/
L2
=285/19.9/
L3
20.9/
N
L1
/=7.1+F22/27.0
L2
/=7.1+F22/27.0
L3
/=7.1+F22/27.0
N
/20.0
-F1
C 16A
DLS 6I C16-3
1
3
5
2
4
6
PE
=F1-X3
17
18
19
20
PE
L1
L2
L3
N
PE
belt
3Ph 16A+N+PE

BEYTEC

... your gateway to success

Company / customer	BeyTec
Project description	Golden Poultry
Job number	Part II
Mounting location	Field 2

Technical data:

Operating voltage	400 V
Operating frequency	50 Hz
Operating current	
Power network	
Control voltage	24VDC
Protection class electrical	SK I
Degree of protection	IP54
Responsible for project	Willen

Created on	21.10.2019		
Edit date	12.12.2019	by (short name) willen	Number of pages 605

Table of contents

Column X: An automatically generated page was edited

F06_001_EN

Page	Page description	supplementary page field	Date	Edited by	X
++A1+F22&BAA/21	Title page / cover sheet		12.12.2019	willen	X
++A1+F22&BAB/22	Table of contents : ++A1+F22&BAA/21 - =56++A1+F22&EFS/53		12.12.2019	willen	
++A1+F22&BAB/23	Table of contents : =56++A1+F22&EFS/54 - =SPS_F2++A1+F22&ETC/67		12.12.2019	willen	
++A1+F22&BPA/24	Summarized parts list : PXC.2702226 - IFM.IG511A		12.12.2019	willen	X
++A1+F22&BPA/25	Summarized parts list : SIE.6ES7132-4BF00-0AA0+TM-E15C24-01 - SIE.6ES7138-4CA01-0AA0+TM-P15C23-A0		12.12.2019	willen	X
=0++A1+F22&EFS/26	Control voltage field 2		12.12.2019	willen	
=7.1++A1+F22&EFS/27	mot. slide 1		12.12.2019	willen	
=8.10.4++A1+F22&EFS/28	Lastkreis Gebläse		12.12.2019	willen	
=8.10.5++A1+F22&EFS/29	Lastkreis Gebläse		12.12.2019	willen	
=8.10.6++A1+F22&EFS/30	Lastkreis Gebläse		12.12.2019	willen	
=8.10.7++A1+F22&EFS/31	Lastkreis Gebläse		12.12.2019	willen	
=8.10.8++A1+F22&EFS/32	Lastkreis Gebläse		12.12.2019	willen	
=9.4++A1+F22&EFS/33	load circuit Sweep auger		12.12.2019	willen	
=9.5++A1+F22&EFS/34	load circuit Sweep auger		12.12.2019	willen	
=9.6++A1+F22&EFS/35	load circuit Sweep auger		12.12.2019	willen	
=9.7++A1+F22&EFS/36	load circuit Sweep auger		12.12.2019	willen	
=9.8++A1+F22&EFS/37	load circuit Sweep auger		12.12.2019	willen	
=10.2.4++A1+F22&EFS/38	mot. slide		12.12.2019	willen	
=10.2.5++A1+F22&EFS/39	mot. slide		12.12.2019	willen	
=10.2.6++A1+F22&EFS/40	mot. slide		12.12.2019	willen	
=10.2.7++A1+F22&EFS/41	mot. slide		12.12.2019	willen	
=10.2.8++A1+F22&EFS/42	mot. slide		12.12.2019	willen	
=13++A1+F22&EFS/43	load circuit trough chain conveyor		12.12.2019	willen	
=50++A1+F22&EFS/44	load circuit trough chain conveyor		12.12.2019	willen	
=50++A1+F22&EFS/45	Steuerstromkreis Trogkettenförderer		12.12.2019	willen	
=51++A1+F22&EFS/46	load circuit trough chain conveyor		12.12.2019	willen	
=51++A1+F22&EFS/47	Steuerstromkreis Trogkettenförderer		12.12.2019	willen	
=51.1.1++A1+F22&EFS/48	mot. slide 1		12.12.2019	willen	
=51.1.2++A1+F22&EFS/49	mot. slide		12.12.2019	willen	
=51.1.3++A1+F22&EFS/50	mot. slide		12.12.2019	willen	
=51.1.4++A1+F22&EFS/51	mot. slide		12.12.2019	willen	
=55++A1+F22&EFS/52	load circuit trough chain conveyor		12.12.2019	willen	
=56++A1+F22&EFS/53	load circuit trough chain conveyor		12.12.2019	willen	

Table of contents

Column X: An automatically generated page was edited

F06_001_EN

Page	Page description	supplementary page field	Date	Edited by	X
=56++A1+F22&EFS/54	Steuerstromkreis Trogkettenförderer		12.12.2019	willen	
=57.1++A1+F22&EFS/55	Flap box		12.12.2019	willen	
=SPS_F2++A1+F22&EFA1/56	overview bus coupler and power module		12.12.2019	willen	
=SPS_F2++A1+F22&EFA1/57	overview inputs		12.12.2019	willen	
=SPS_F2++A1+F22&EFA1/58	overview inputs		12.12.2019	willen	
=SPS_F2++A1+F22&EFA1/59	overview inputs		12.12.2019	willen	
=SPS_F2++A1+F22&EFA1/60	overview inputs		12.12.2019	willen	
=SPS_F2++A1+F22&EFA1/61	overview inputs		12.12.2019	willen	
=SPS_F2++A1+F22&EFA1/62	overview outputs		12.12.2019	willen	
=SPS_F2++A1+F22&EFA1/63	overview outputs		12.12.2019	willen	
=SPS_F2++A1+F22&EFA1/64	overview outputs		12.12.2019	willen	
=SPS_F2++A1+F22&EFS/65	PLC power supply bus coupler		12.12.2019	willen	
=SPS_F2++A1+F22&EFS/66	PLC power supply power module		12.12.2019	willen	
=SPS_F2++A1+F22&ETC/67	PLC overview field 2		12.12.2019	willen	

Summarized parts list

F02_002_en_US

Order number	Quantity	Designation	Type number	Supplier
2702226	1	LED enclosure light	PLD E 608 W 315/F	PXC
IG512A	20	Inductive sensor, DC PNP, Normally closed	IGK3005-APKG/AM/US104DPO/3G/3D	IFM
2900574	11	Hybrid motor starter	ELR H5-I-SC- 24DC/500AC-2	PXC
2903334	22	relay module 24DC/2X21	RIF-1-RPT-LDP-24DC/2X21	PHOENIX
046988	9	Motor-protective circuit-breaker, 3p, Ir=16-20A, screw connection	PKZM0-20	EATON
082882	16	Standard auxiliary contact, 1N/O+1N/C, flush mounting, screw connection	NHI-E-11-PKZ0	EATON
101451	15	Busbar adapter, 45mm, 25A, 1TS	BBA0-25	ETN
276705	5	Contactor, 3p+1N/O, 4kW/400V/AC3	DILM9-10(24VDC)	ETN
072739	5	Motor-protective circuit-breaker, 3p, Ir=6.3-10A, screw connection	PKZM0-10	EATON
283149	5	Kit, +component adapter, for DOL starter for DILM7-M15	PKZM0-XDM12	ETN
	0			
277146	9	Contactor, 3p+1N/O, 11kW/400V/AC3	DILM25-10(RDC24)	ETN
239349	7	Wiring module, for DILM17-M32	PKZM0-XM32DE	ETN
T221761	3	MS220K, PTC-resistor trip device, AC/DC24V	MS220K	ZIEHL
277018	4	Contactor, 3p+1N/O, 7.5kW/400V/AC3	DILM17-10(RDC24)	ETN
283131	6	Secondary terminal wire kit, star-delta, for DILM17-32	DILM32-XSL	ETN
276421	4	Auxiliary contact module, 1NO+1N/C, surface mounting, screw connection	DILA-XHI11	ETN
83.82.0.240.0000	3	Modular timer, Star-delta (SD) - AC (50/60 Hz)/DC - 24...240 V	83.82.0.240.0000	FINDER
2903370	3	????	RIF-0-RPT-24DC/21	PHOENIX
278489	1	Motor-protective circuit-breaker, 3p, Ir=25-32A	PKZM0-32	EATON
277780	3	Contactor, 3p, 18.5kW/400V/AC3	DILM40(RDC24)	ETN
277946	3	Auxiliary contact module, 1N/O+1N/C	DILM150-XHI11	ETN
265721	1	Circuit-breaker, 3p, 80A	NZMN1-M80	ETN
216376	1	Contact element, 1N/O, front mount, 6. contact, screw connection	M22-K10	EATON
216378	1	Contact element, 1 N/C, front mount, 6. contact, screw connection	M22-K01	EATON
104554	1	Sammelschienenadapter, 90 mm, 160 A,	NZM1-XAD160	ETN
222355	1	Motor-protective circuit-breaker, 3p, Ir=40-50A, screw connection	PKZM4-50	EATON
IG511A	2	Inductive sensor, DC PNP, normally open	IGK3012-BPKG/AM/P/US104/3G/3D	IFM

Summarized parts list

F02_002_en_US

Order number	Quantity	Designation	Type number	Supplier
6ES7132-4BF00-0AA0 / 6ES7193-4CB30-0AA0	5	8DO, 24V DC, 0.5A / TM-E15C24-01	6ES7132-4BF00-0AA0 / 6ES7193-4CB30-0AA0	SIE
6ES7131-4BF00-0AA0 / 6ES7193-4CB30-0AA0	9	8DI, 24V DC / TM-E15C24-01	6ES7131-4BF00-0AA0 / 6ES7193-4CB30-0AA0	SIE
6ES7151-1AA06-0AB0	1	ET200S, IM151-1 STD, 12MBIT/S	6ES7151-1AA06-0AB0	SIE
6ES7138-4CA01-0AA0 / 6ES7193-4CD30-0AA0	2	PM-E, DC 24V / TM-P15C23-A0	6ES7138-4CA01-0AA0 / 6ES7193-4CD30-0AA0	SIE

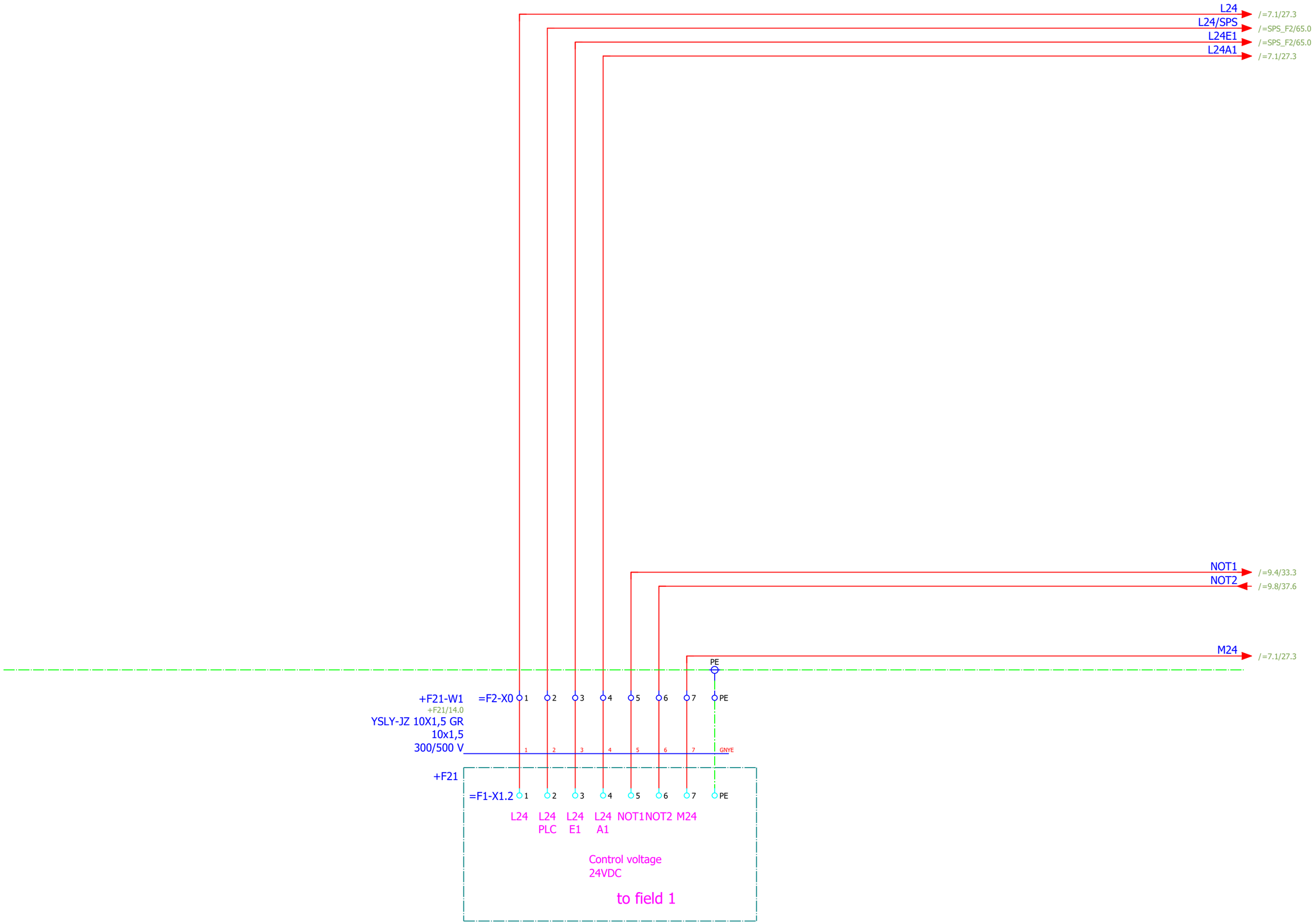
L24
/=7.1/27.3
L24/SPS
/=SPS_F2/65.0
L24E1
/=SPS_F2/65.0
L24A1
/=7.1/27.3
NOT1
/=9.4/33.3
NOT2
/=9.8/37.6
M24
/=7.1/27.3
PE
+F21-W1
+F21/14.0
YSLY-JZ 10X1,5 GR
10x1,5
300/500 V
=F2-X0
1 2 3 4 5 6 7 PE
GNYE
+F21
=F1-X1.2
1 2 3 4 5 6 7 PE
L24 L24 PLC L24 E1 L24 A1 NOT1 NOT2 M24
Control voltage
24VDC
to field 1

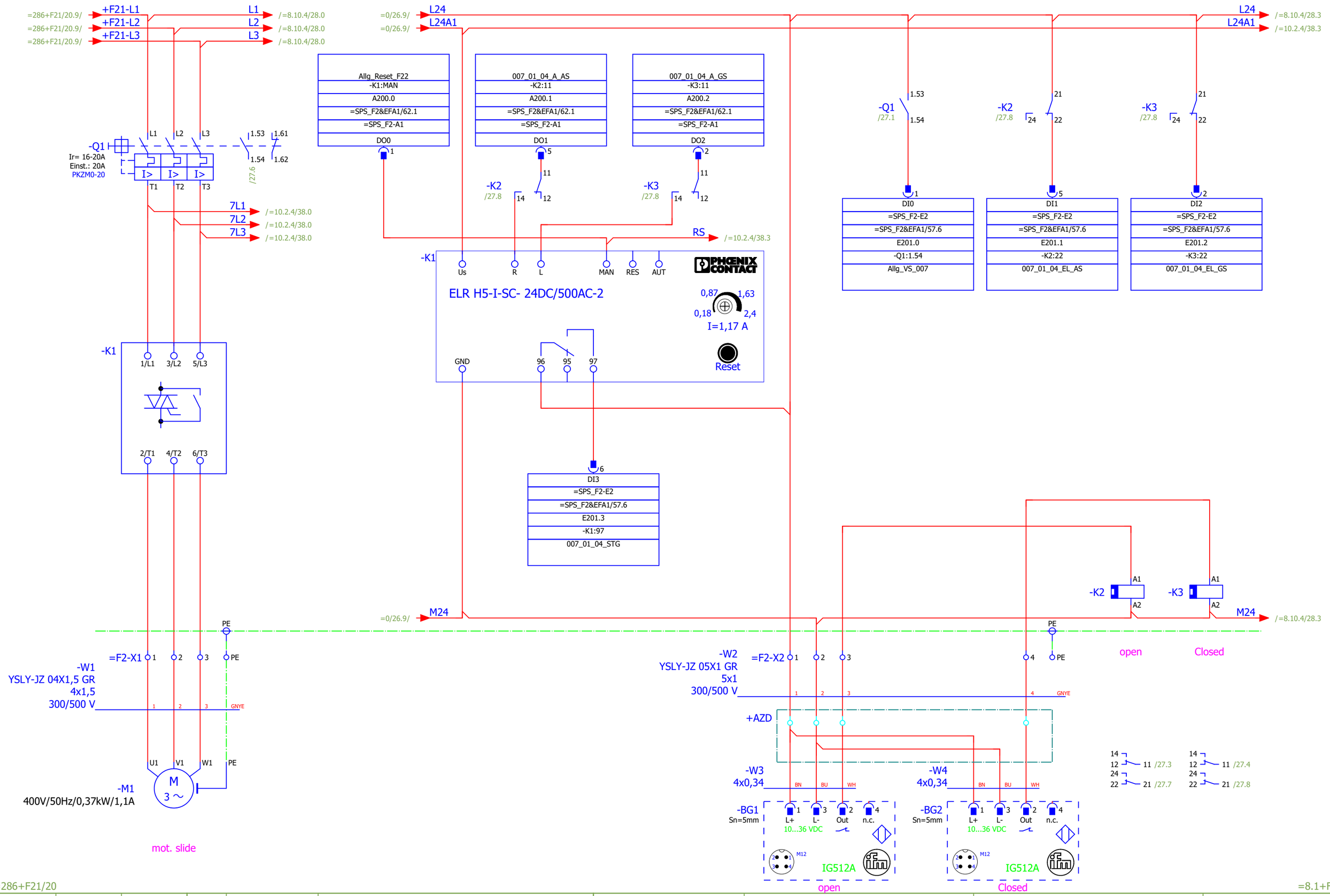

			Date	12.12.2019	Mixed feed plant Golden Poultry	BEYTEC ... your gateway to success	mot. slide 1	= 7.1	
			Ed.	willen				+ F22	
			Appr		Field 2		1 : 1	Part II	Page 27
Modification	Date	Name	Original	V:\EPLAN\Projekte\Company\Replace\Beytec\2018\Feed Mill Alssad.elk	Replaced by				Page 605

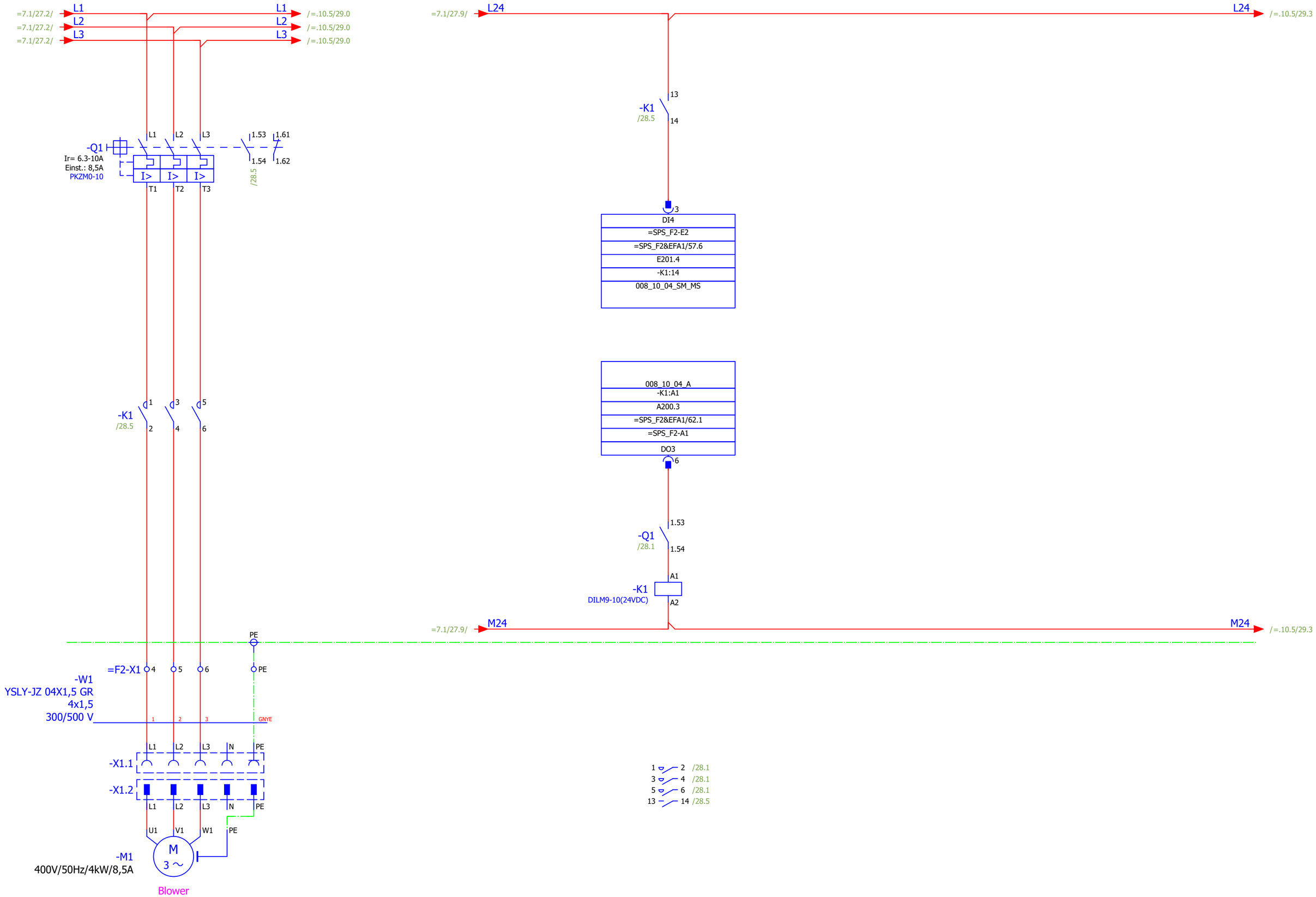

=.2+F27/297

=.10.5/29

			Date	12.12.2019	Mixed feed plant Golden Poultry	BEYTEC ... your gateway to success	Lastkreis Gebläse		= 8.10.4	
			Ed.	willen	Field 2				+ F22	
			Appr					1 : 1	Part II	Page 28
Modification	Date	Name	Original	V:\EPLAN\Projekte\Company\Beytec\2018\Feed Mill Alssad.elk	Replaced by					Page 605

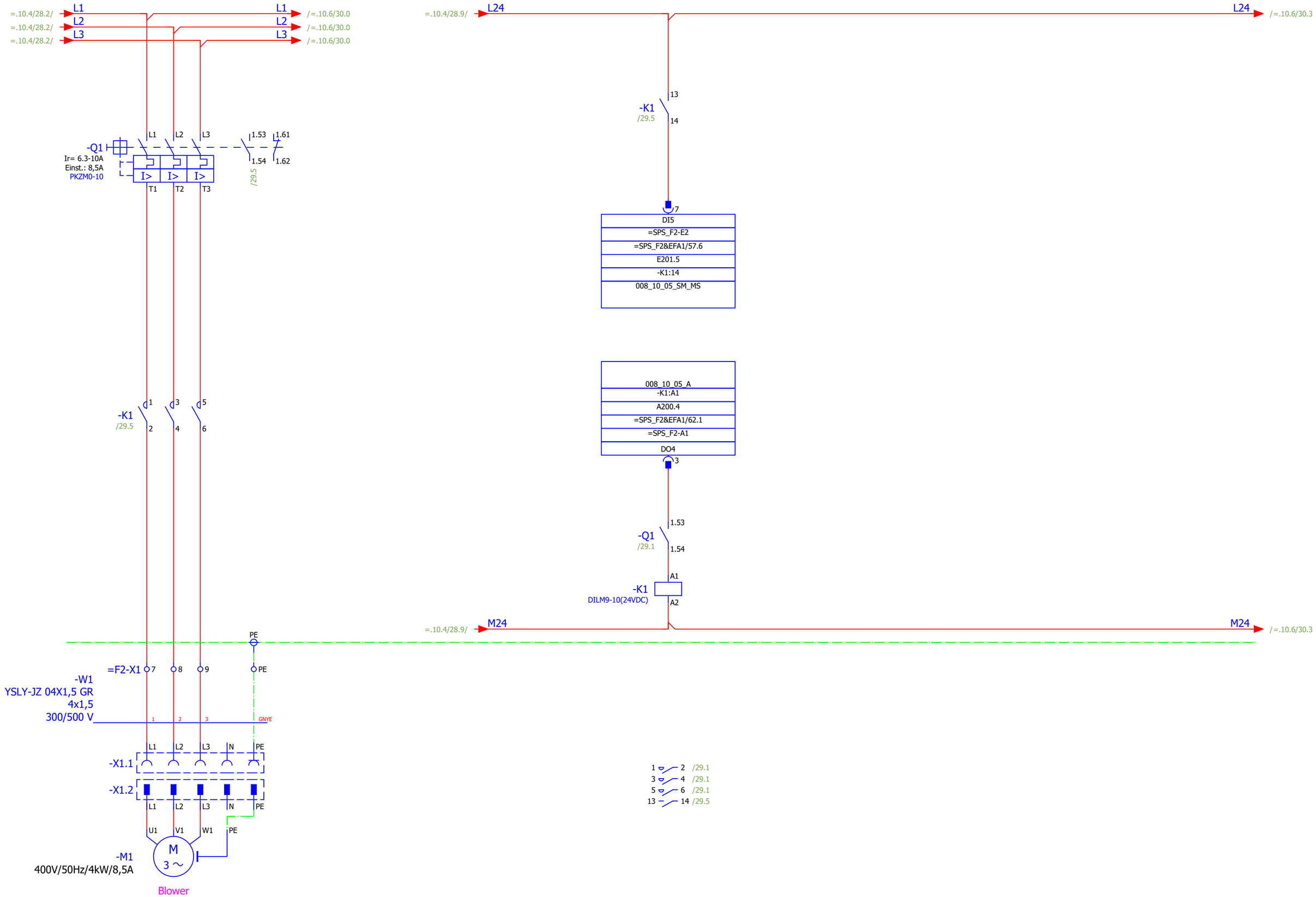

=.10.4/28

=.10.6/30

			Date	12.12.2019	Mixed feed plant Golden Poultry	BEYTEC ... your gateway to success	Lastkreis Gebläse	= 8.10.5	
			Ed.	willen	Field 2			+ F22	
			Appr				1 : 1	Part II	Page 29
Modification	Date	Name	Original	V:\EPLAN\Projekte\Company\Beytec\2018\Feed Mill Alssad.elk	Replaced by				Page 605

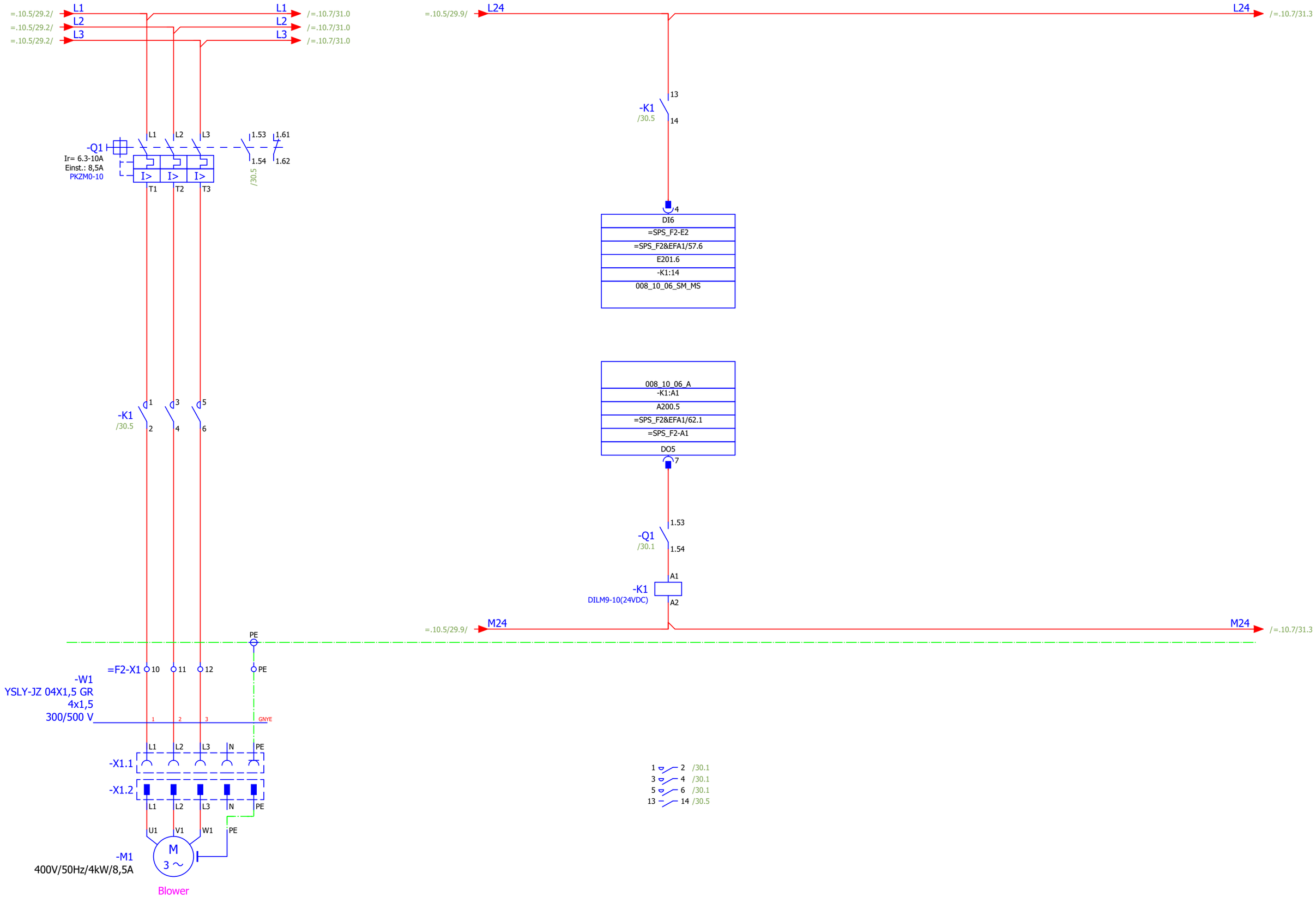

=.10.5/29

=.10.7/31

			Date	12.12.2019	Mixed feed plant Golden Poultry	BEYTEC	Lastkreis Gebläse			= 8.10.6	
			Ed.	willen	Field 2	... your gateway to success				+ F22	
			Appr					1 : 1	Part II	Page	30
Modification	Date	Name	Original	V:\EPLAN\Projekte\Company\Beytec\2018\Feed Mill Alssad.elk	Replaced by					Page	605

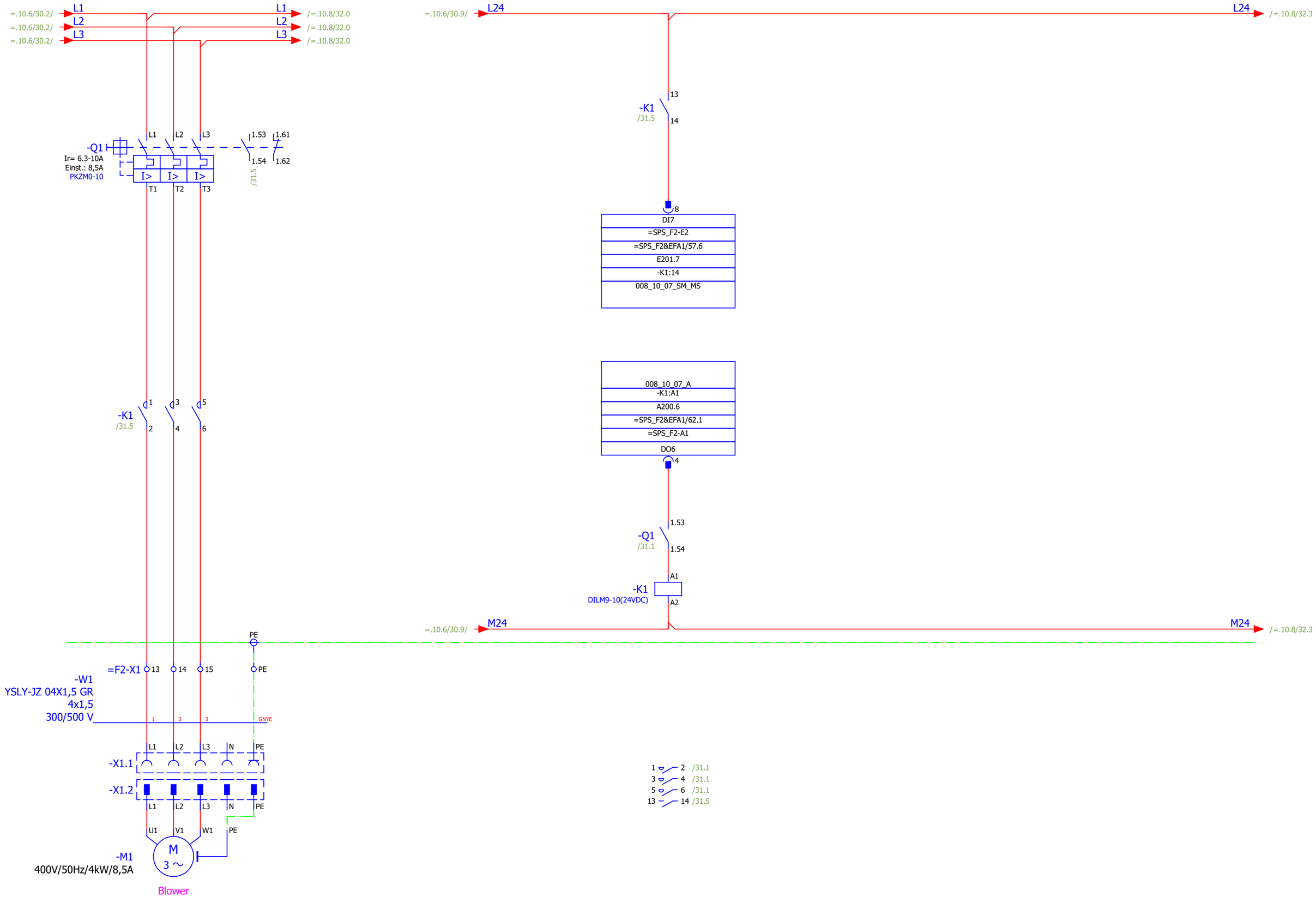

=.10.6/30

=.10.8/32

			Date	12.12.2019	Mixed feed plant Golden Poultry	BEYTEC	Lastkreis Gebläse		= 8.10.7	
			Ed.	willen	Field 2	... your gateway to success			+ F22	
			Appr					1 : 1	Part II	Page 31
Modification	Date	Name	Original	V:\EPLAN\Projekte\Company\Beytec\2018\Feed Mill Alssad.elk	Replaced by					Page 605

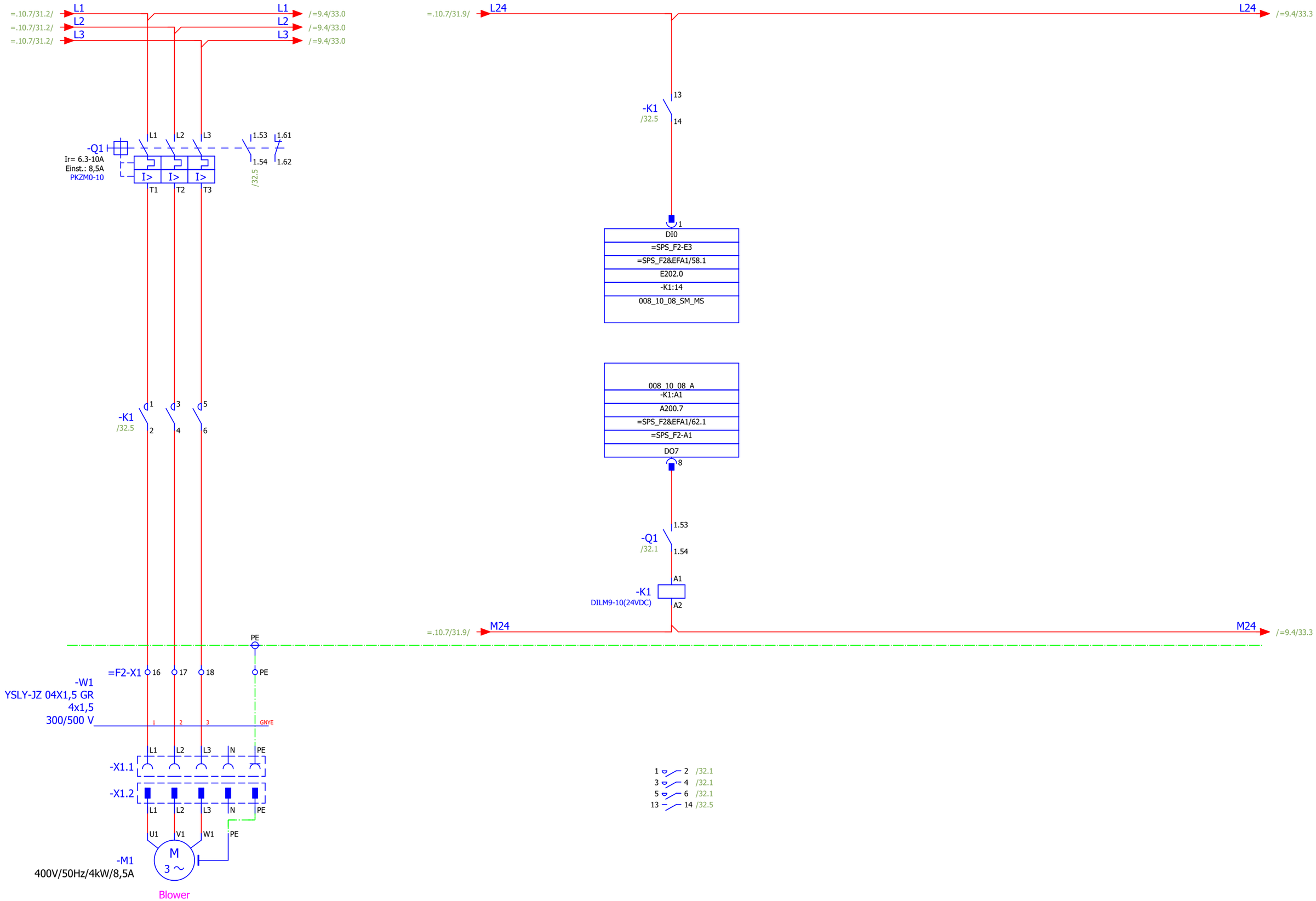

=.10.7/31 =9.4/33

			Date	12.12.2019	Mixed feed plant Golden Poultry	BEYTEC	Lastkreis Gebläse		= 8.10.8	
			Ed.	willen	Field 2	... your gateway to success			+ F22	
			Appr					1 : 1	Part II	Page 32
Modification	Date	Name	Original	V:\EPLAN\Projekte\Company\Beytec\2018\Feed Mill Alssad.elk	Replaced by					Page 605

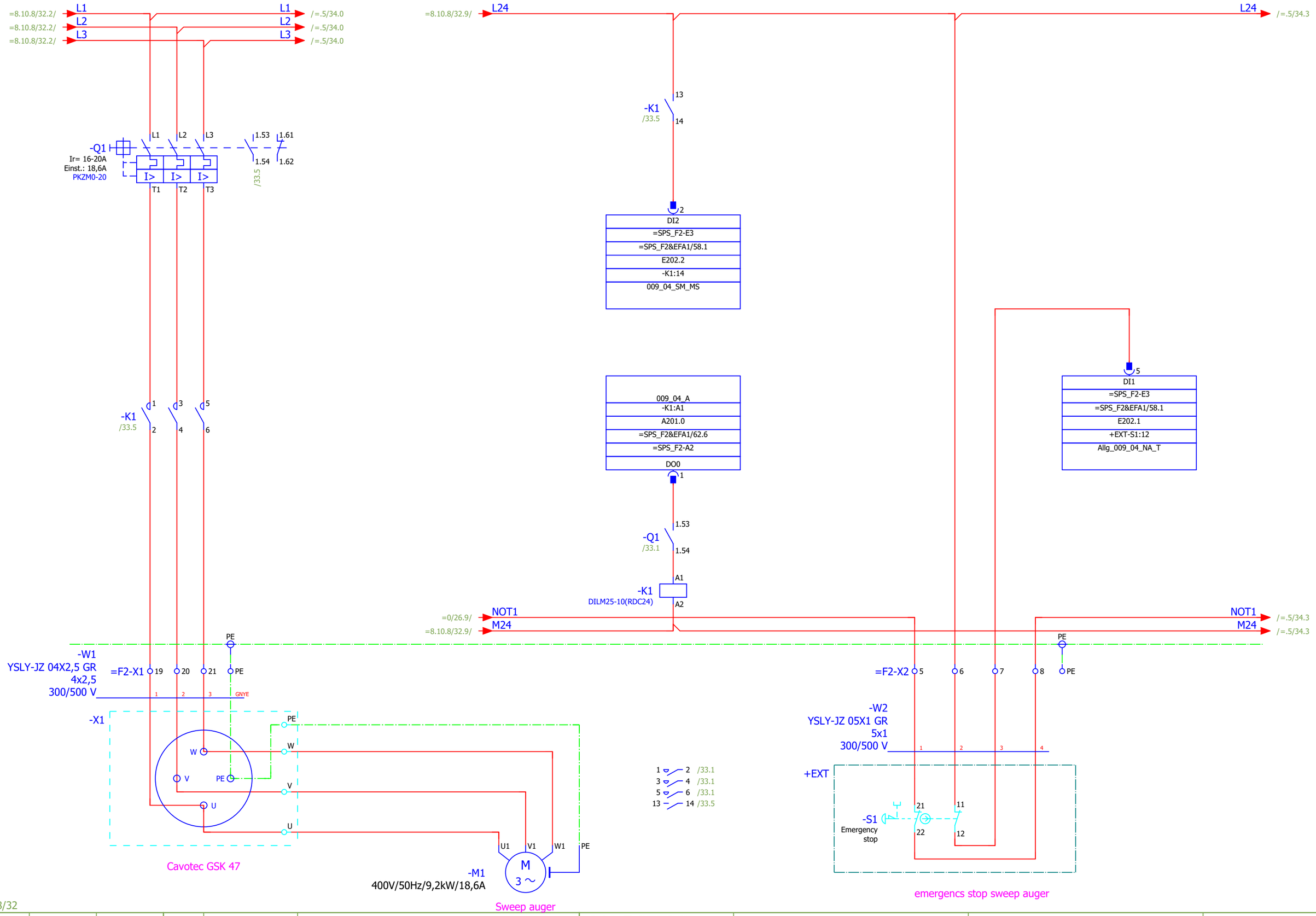

=8.10.8/32 +F27/298

			Date	12.12.2019	Mixed feed plant Golden Poultry	BEYTEC ... your gateway to success	load circuit Sweep auger	= 9.4
			Ed.	willen	Field 2			+ F22
			Appr				1 : 1	Part II
Modification	Date	Name	Original	V:\EPLAN\Projekte\Company\Beytec\2018\Feed Mill Alssad.elk	Replaced by			Page 33 / Page 605

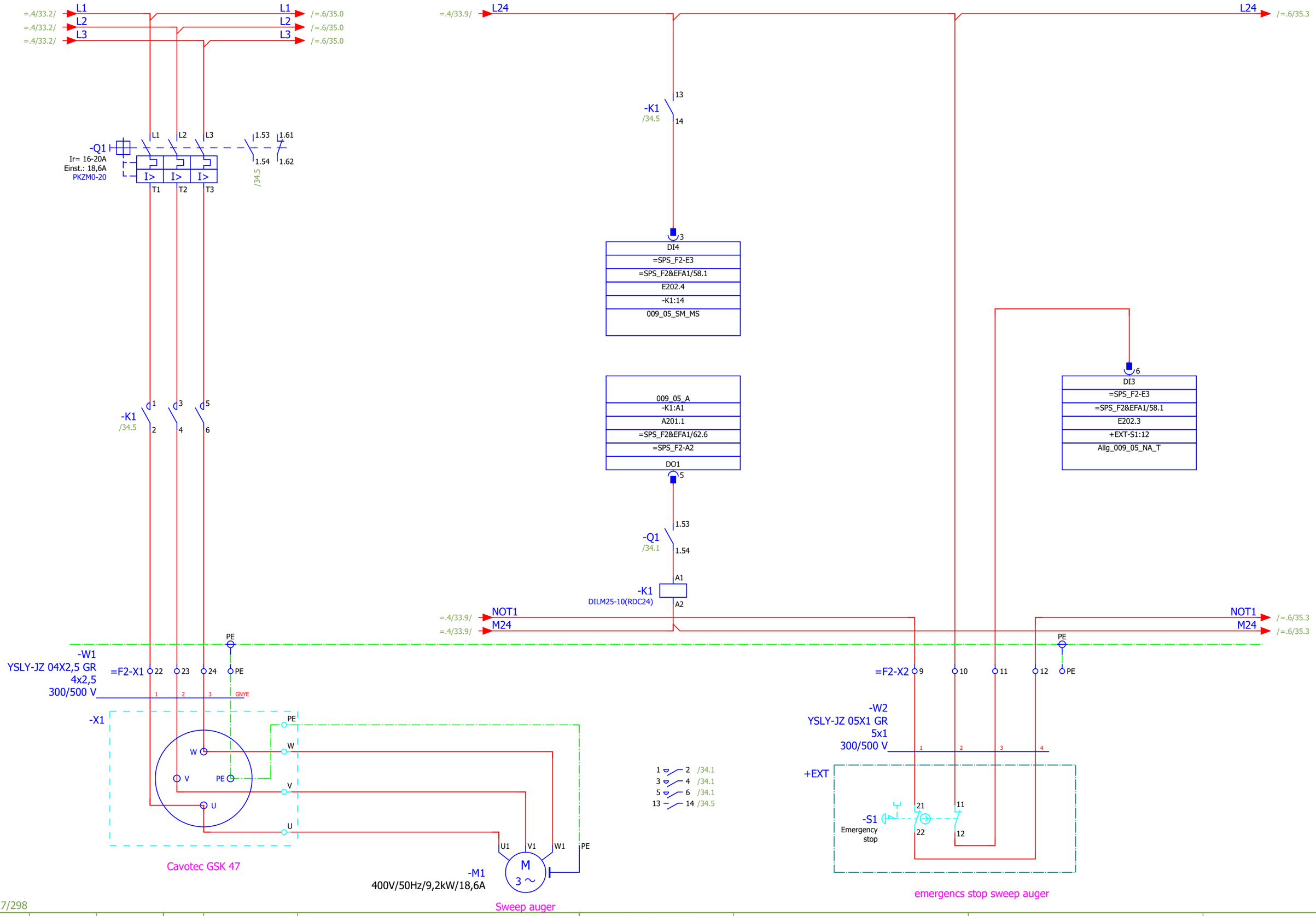

=.4+F27/298

+F27/299

			Date	12.12.2019	Mixed feed plant Golden Poultry	BEYTEC ... your gateway to success	load circuit Sweep auger	= 9.5
			Ed.	willen	Field 2			+ F22
			Appr				1 : 1	Part II
Modification	Date	Name	Original	V:\EPLAN\Projekte\Company\Beytec\2018\Feed Mill Alssad.elk	Replaced by			Page 34 / Page 605

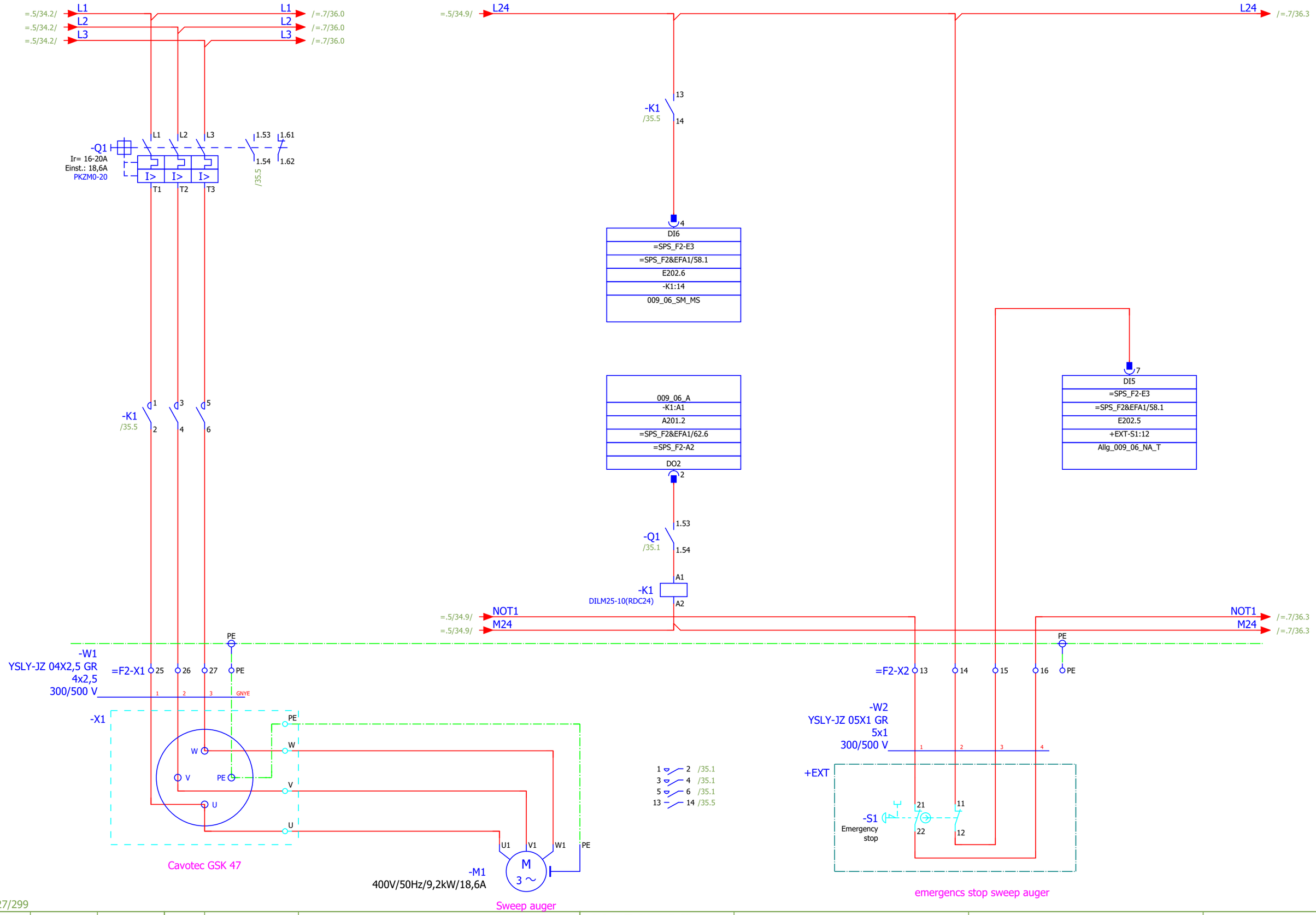

=.5+F27/299

+F27/300

			Date	12.12.2019	Mixed feed plant Golden Poultry	BEYTEC ... your gateway to success	load circuit Sweep auger	= 9.6
			Ed.	willen	Field 2			+ F22
			Appr				1 : 1	Part II
Modification	Date	Name	Original	V:\EPLAN\Projekte\Company\Beytec\2018\Feed Mill Alssad.elk	Replaced by			Page 35 / Page 605

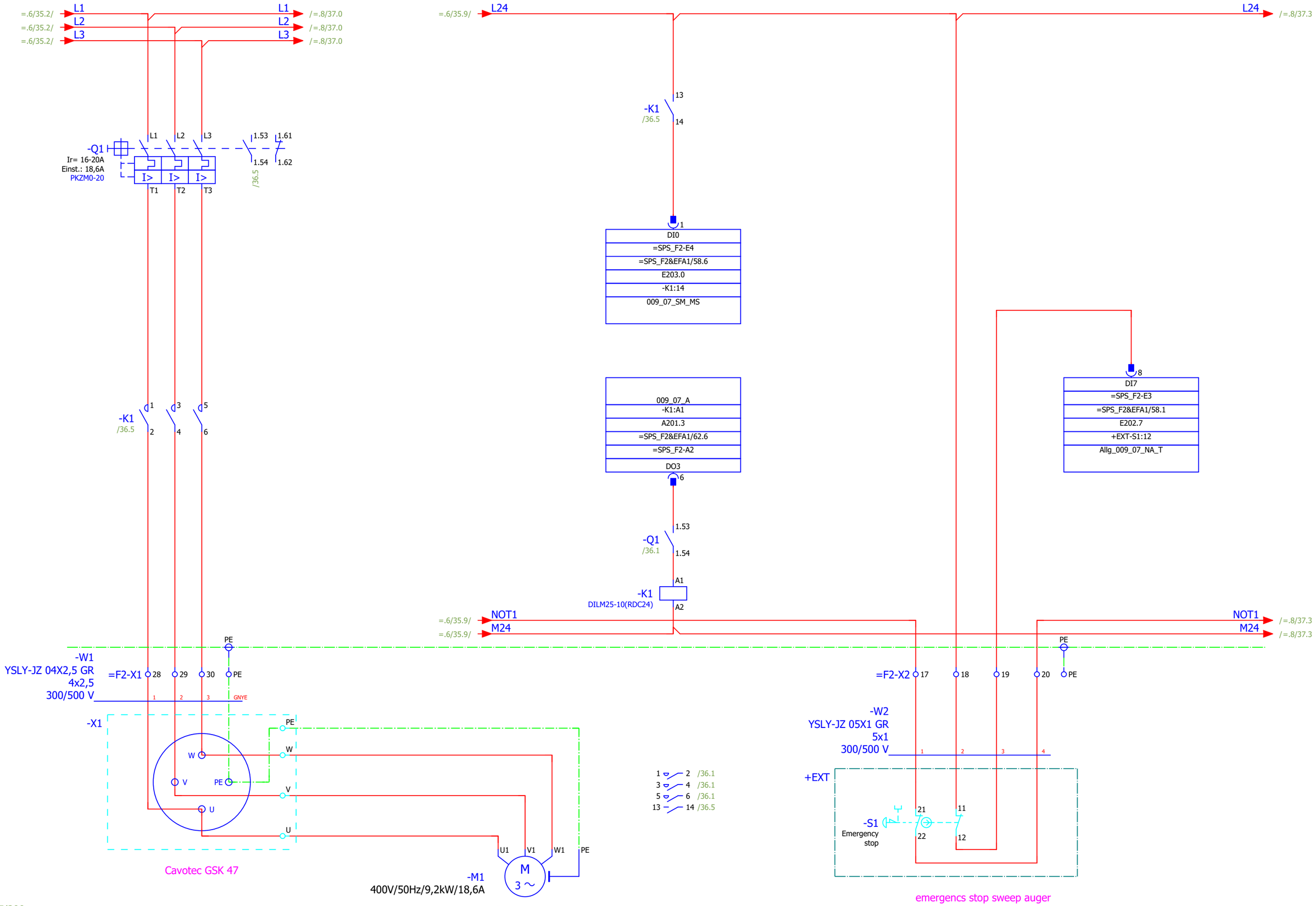

=.6+F27/300

+F27/301

			Date	12.12.2019	Mixed feed plant Golden Poultry	BEYTEC ... your gateway to success	load circuit Sweep auger	= 9.7
			Ed.	willen	Field 2			+ F22
			Appr				1 : 1	Part II
Modification	Date	Name	Original	V:\EPLAN\Projekte\Company\Beytec\2018\Feed Mill Alssad.elk	Replaced by			Page 36 / Page 605

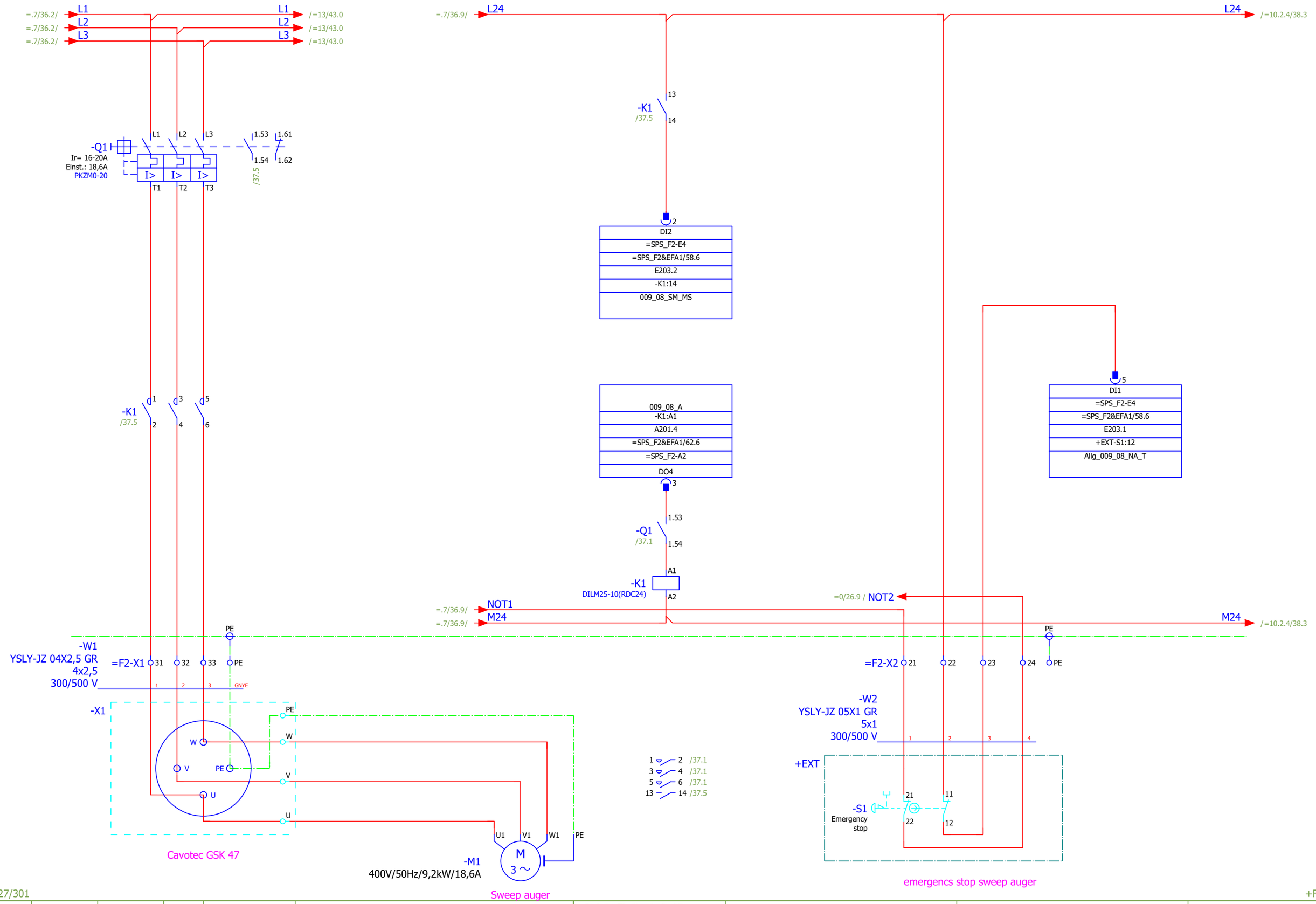

=.7+F27/301

+F27/302

			Date	12.12.2019	Mixed feed plant Golden Poultry	BEYTEC ... your gateway to success	load circuit Sweep auger	= 9.8
			Ed.	willen				+ F22
			Appr		Field 2		1 : 1	Part II
Modification	Date	Name	Original	V:\EPLAN\Projekte\Company\Beytec\2018\Feed Mill Alssad.elk	Replaced by			Page 37 / Page 605

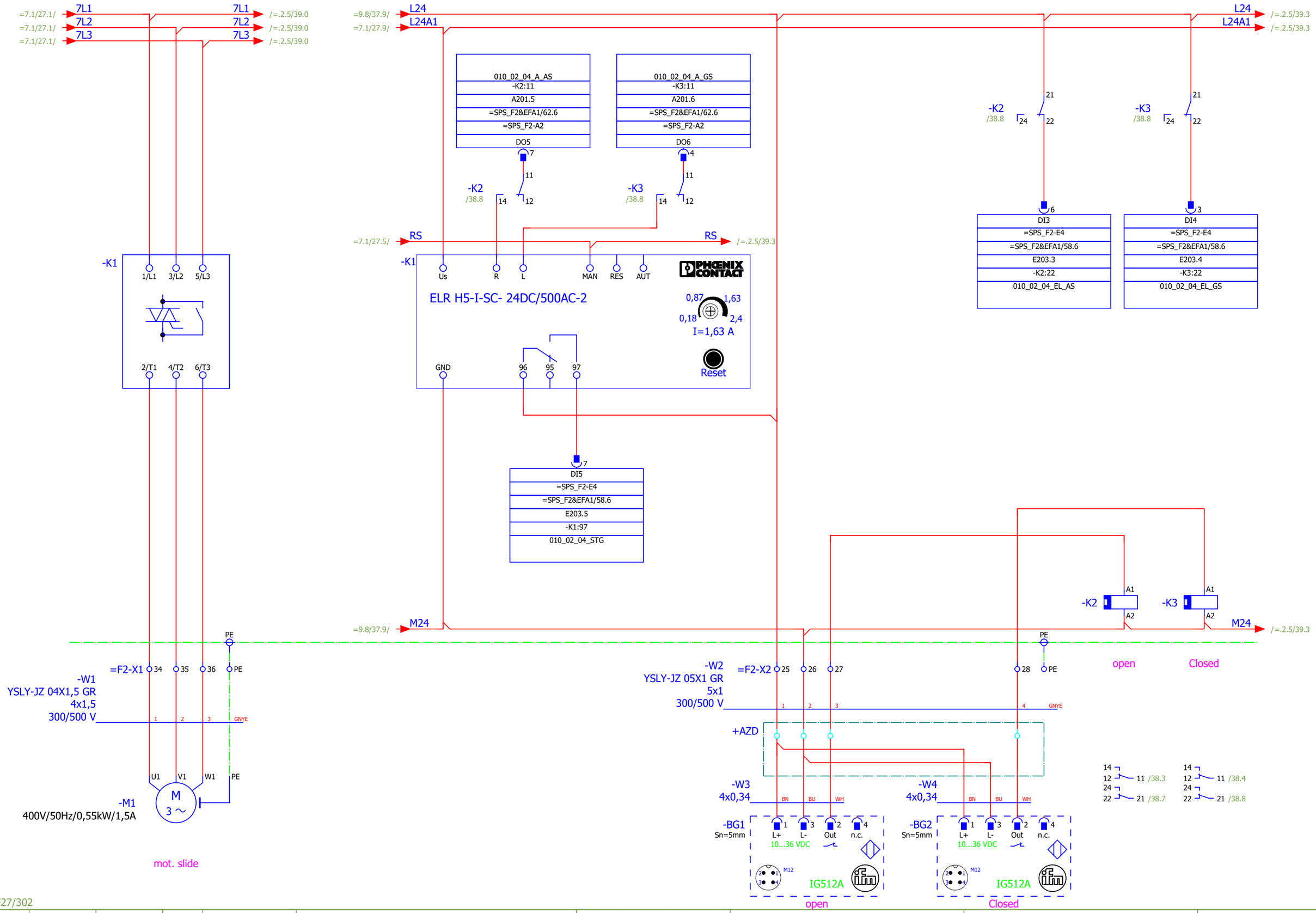

=9.8+F27/302

=.2.5/39

			Date	12.12.2019	Mixed feed plant Golden Poultry	BEYTEC	mot. slide	= 10.2.4	
			Ed.	willen				+ F22	
			Appr		Field 2	... your gateway to success		1 : 1 Part II	Page 38
Modification	Date	Name	Original	V:\EPLAN\Projekte\Company\Beytec\2018\Feed Mill Alssad.elk	Replaced by				Page 605

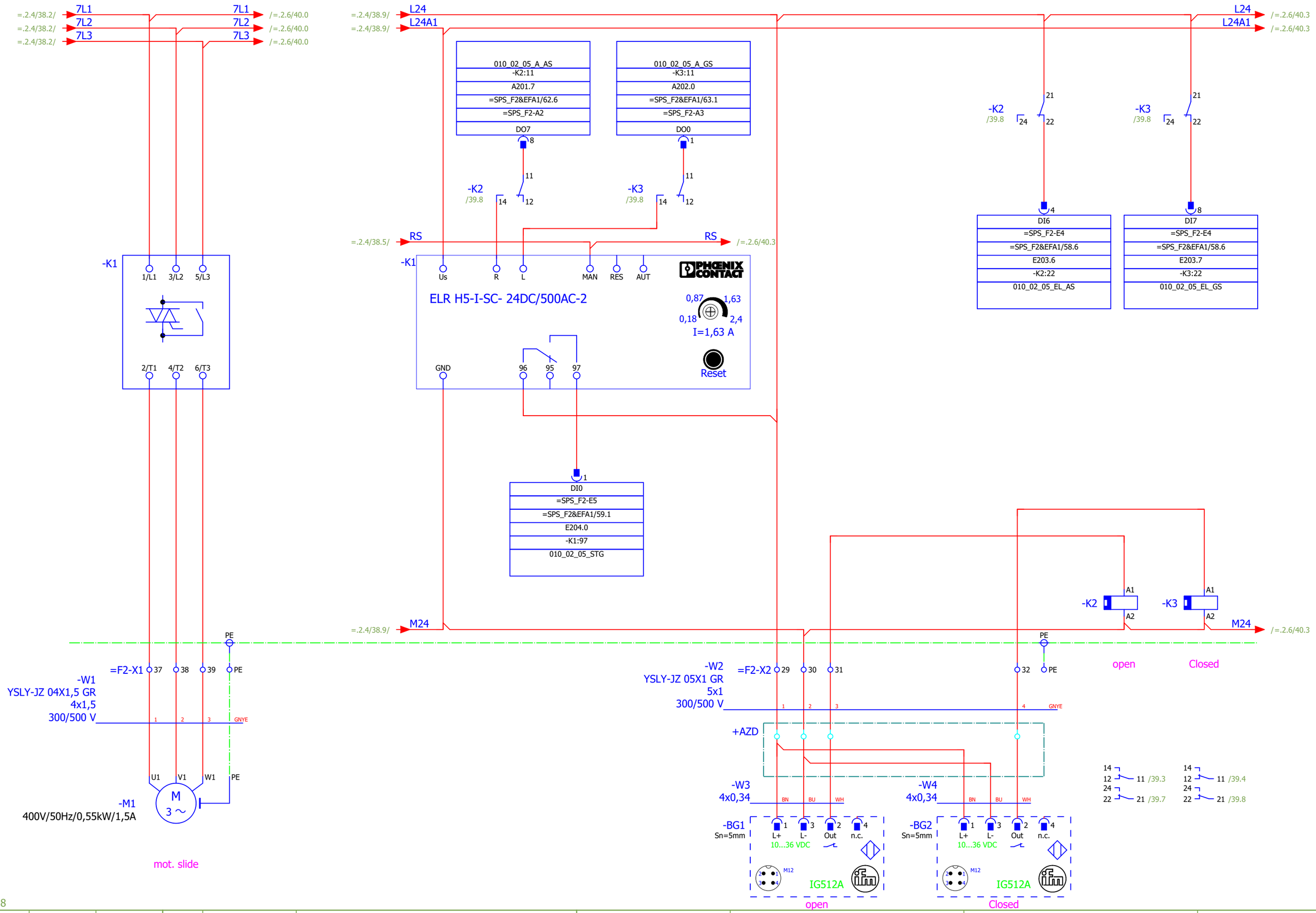

=.2.4/38

=.2.6/40

			Date	12.12.2019	Mixed feed plant Golden Poultry	BEYTEC ... your gateway to success	mot. slide
			Ed.	willen			
			Appr		Field 2		
Modification	Date	Name	Original	V:\EPLAN\Projekte\Company\Replace\Beytec\2018\Feed Mill Alssad.elk	Replaced by		

= 10.2.5
+ F22

1 : 1 | Part II | Page 39 | Page 605

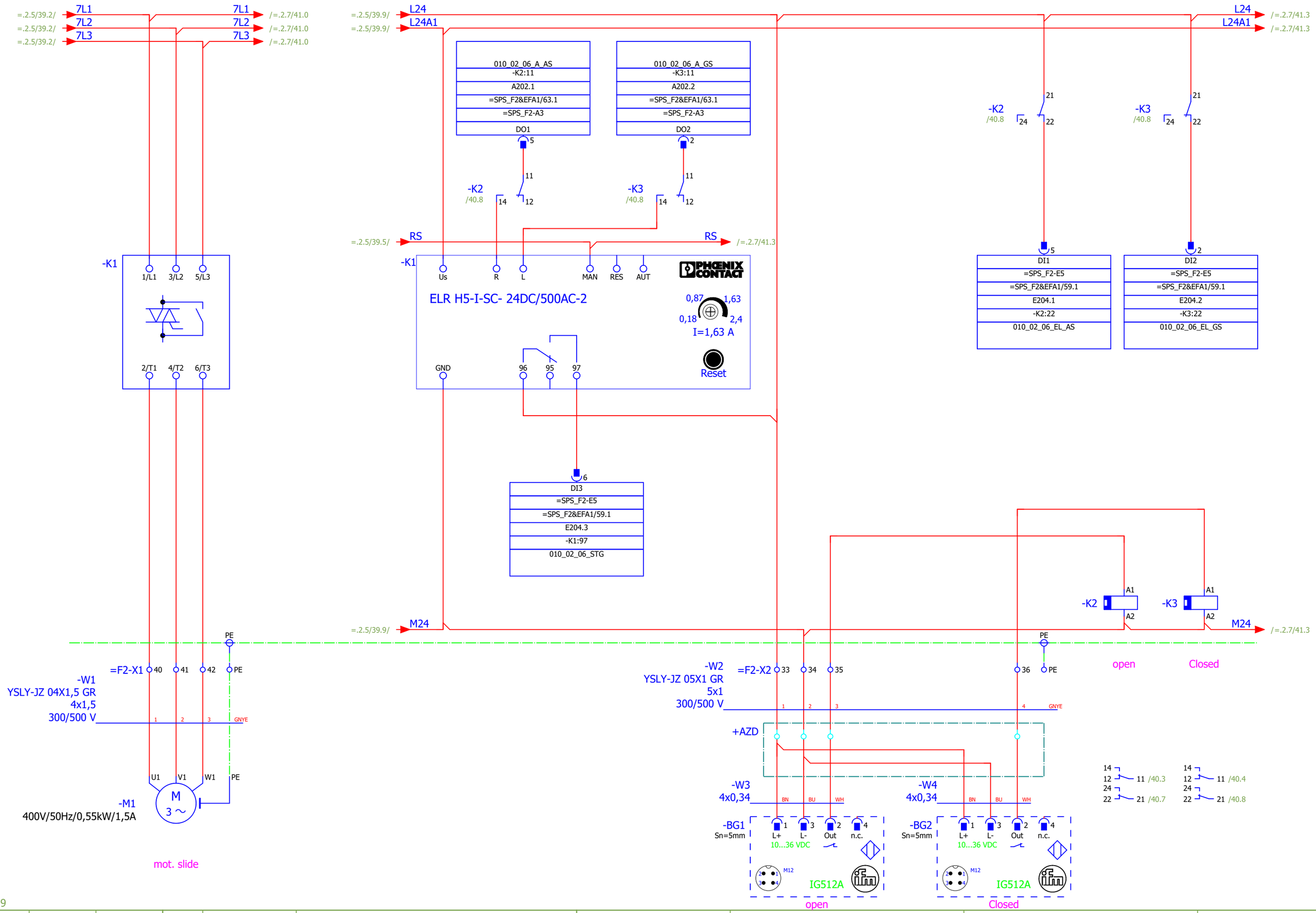

=.2.5/39

=.2.7/41

			Date	12.12.2019	Mixed feed plant Golden Poultry	BEYTEC ... your gateway to success	mot. slide
			Ed.	willen			
			Appr		Field 2		
Modification	Date	Name	Original	V:\EPLAN\Projekte\Company\Replace\Beytec\2018\Feed Mill Alssad.elk	Replaced by		

= 10.2.6
+ F22

1 : 1 | Part II | Page 40 | Page 605

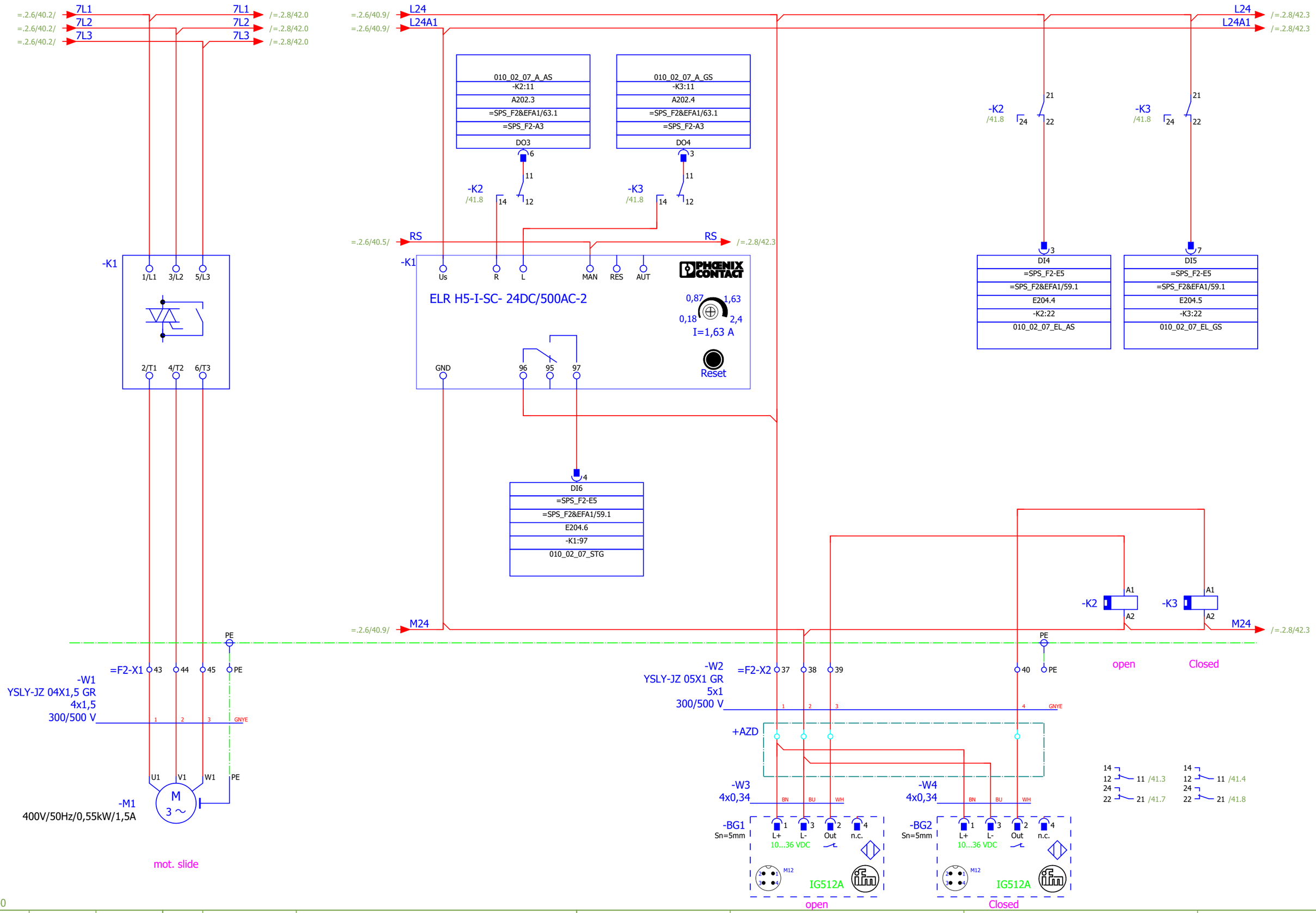

=.2.6/40

=.2.8/42

			Date	12.12.2019	Mixed feed plant Golden Poultry	BEYTEC ... your gateway to success	mot. slide
			Ed.	willen			
			Appr		Field 2		
Modification	Date	Name	Original	V:\EPLAN\Projekte\Company\Replace\Beytec\2018\Feed Mill Alssad.elk	Replaced by		

= 10.2.7
+ F22

1 : 1 | Part II | Page 41 | Page 605

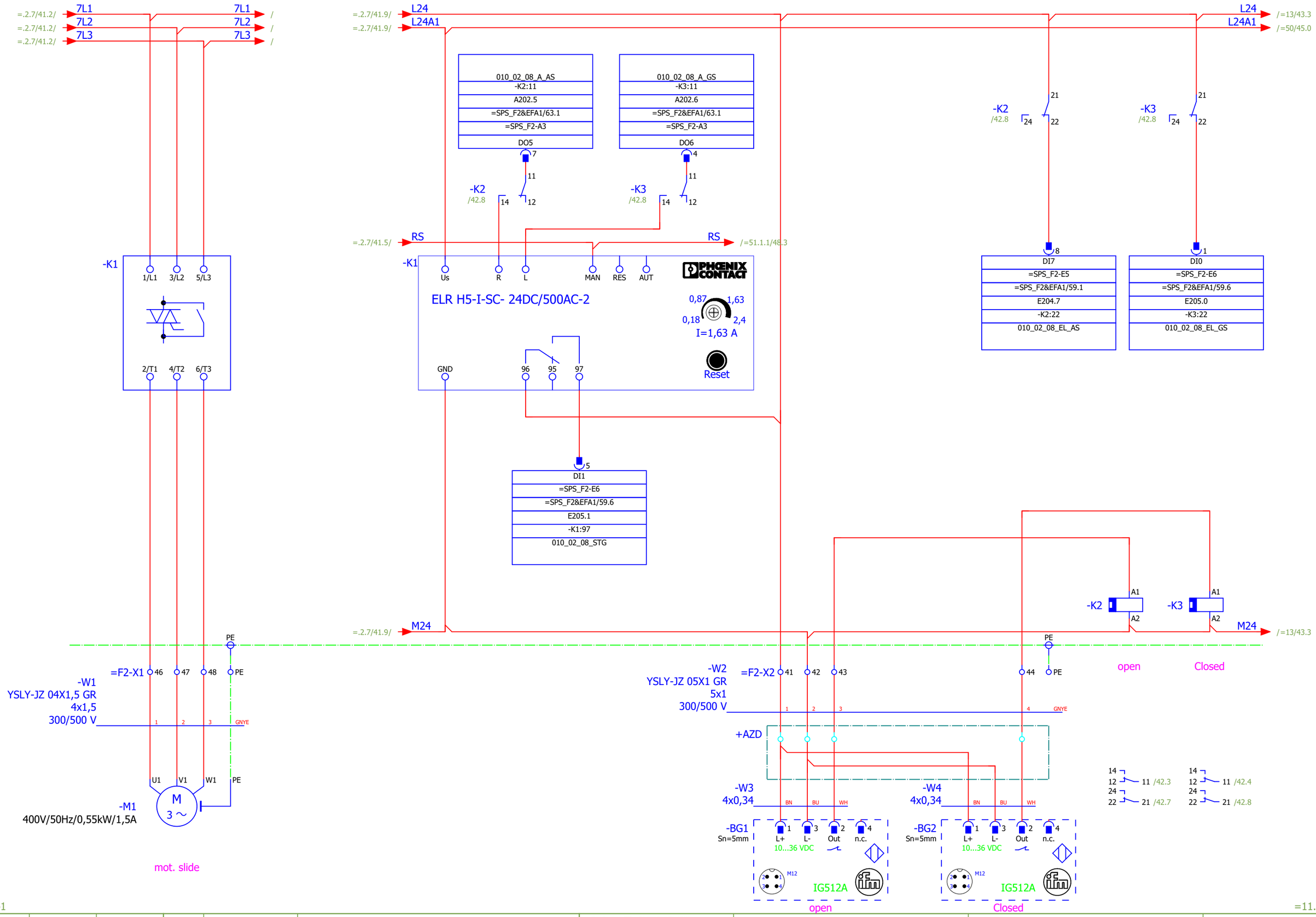

=.2.7/41

=11.4+F27/303

			Date	12.12.2019	Mixed feed plant Golden Poultry	BEYTEC ... your gateway to success	mot. slide	= 10.2.8	
			Ed.	willen	Field 2			+ F22	
			Appr				1 : 1	Part II	Page 42
Modification	Date	Name	Original	V:\EPLAN\Projekte\Company\Beytec\2018\Feed Mill Alssad.elk	Replaced by				Page 605

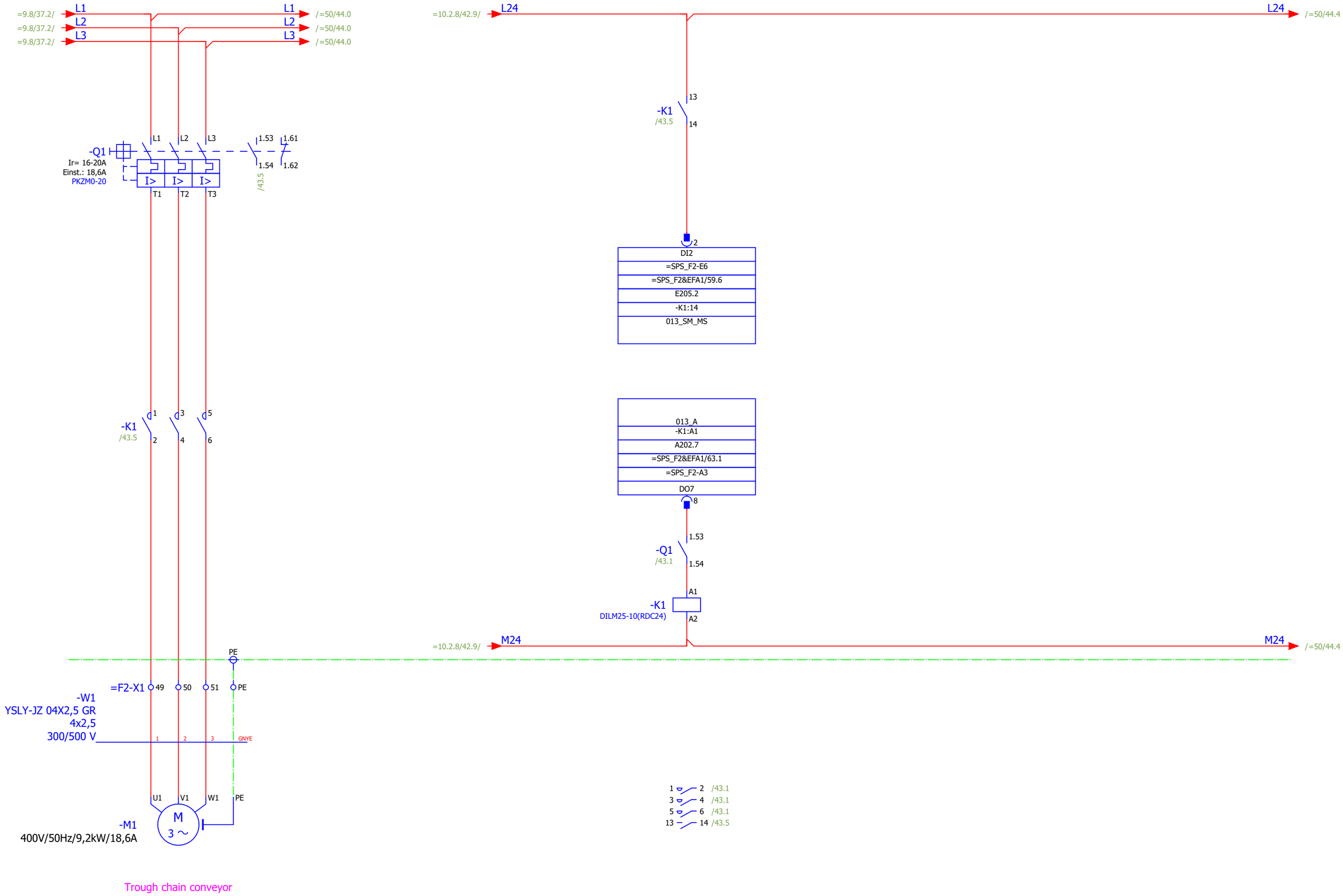

Trough chain conveyor

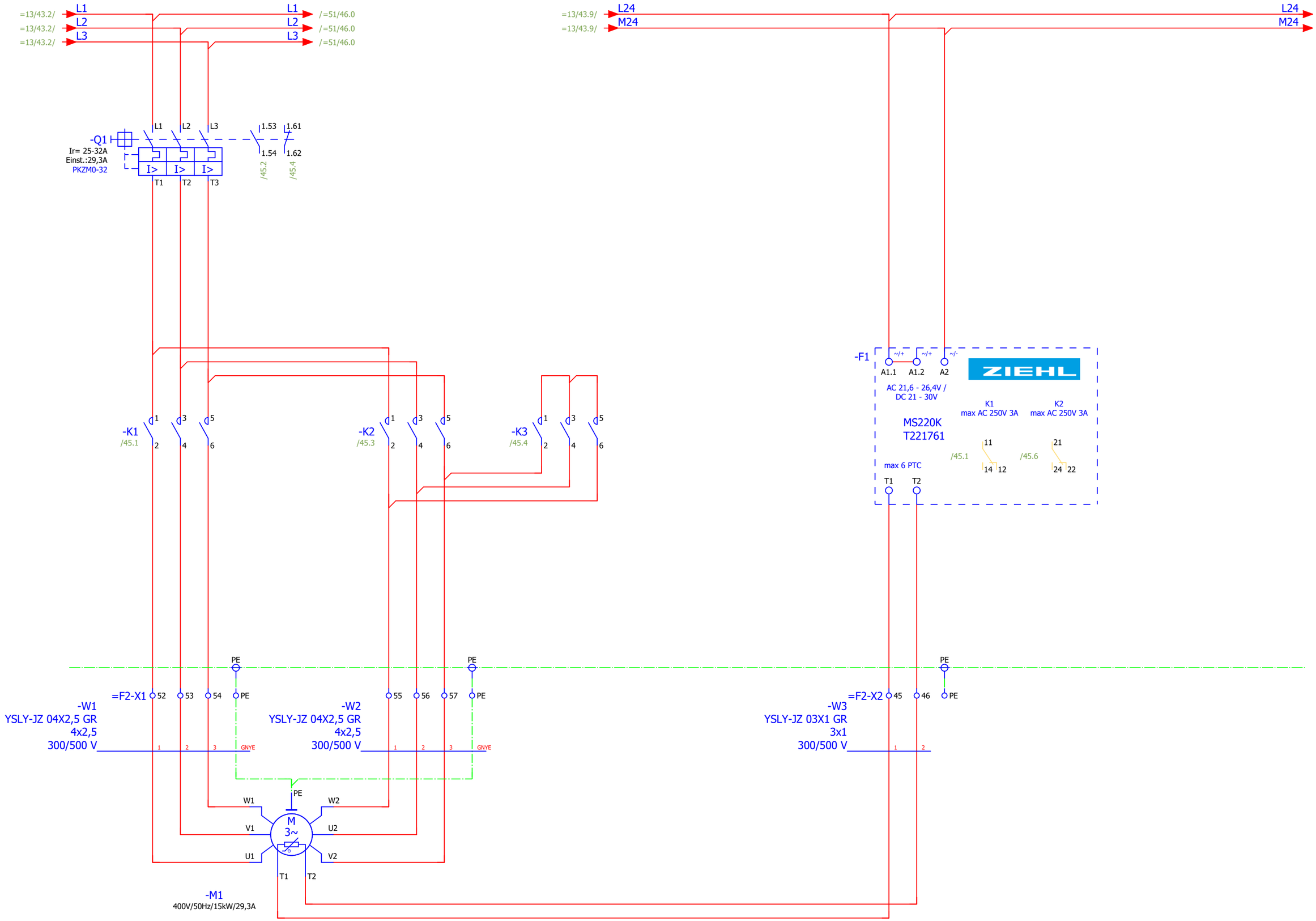
=13/43.2/ L1
=13/43.2/ L2
=13/43.2/ L3
L1 /=51/46.0
L2 /=51/46.0
L3 /=51/46.0
=13/43.9/ L24
=13/43.9/ M24
L24 /45.0
M24 /45.0
-Q1
Ir= 25-32A
Einst.:29,3A
PKZM0-32
I> I> I>
T1 T2 T3
1.53 1.61
1.54 1.62
/45.2
/45.4
-K1
/45.1
-K2
/45.3
-K3
/45.4
-F1
~/+ ~/+ ~/-
A1.1 A1.2 A2
ZIEHL
AC 21,6 - 26,4V /
DC 21 - 30V
MS220K
T221761
K1
max AC 250V 3A
K2
max AC 250V 3A
/45.1
/45.6
max 6 PTC
T1 T2
PE
=F2-X1 52 53 54 PE
-W1
YSLY-JZ 04X2,5 GR
4x2,5
300/500 V
55 56 57 PE
-W2
YSLY-JZ 04X2,5 GR
4x2,5
300/500 V
=F2-X2 45 46 PE
-W3
YSLY-JZ 03X1 GR
3x1
300/500 V
GNYE
W1 W2
V1 U2
U1 V2
M
3~
T1 T2
-M1
400V/50Hz/15kW/29,3A

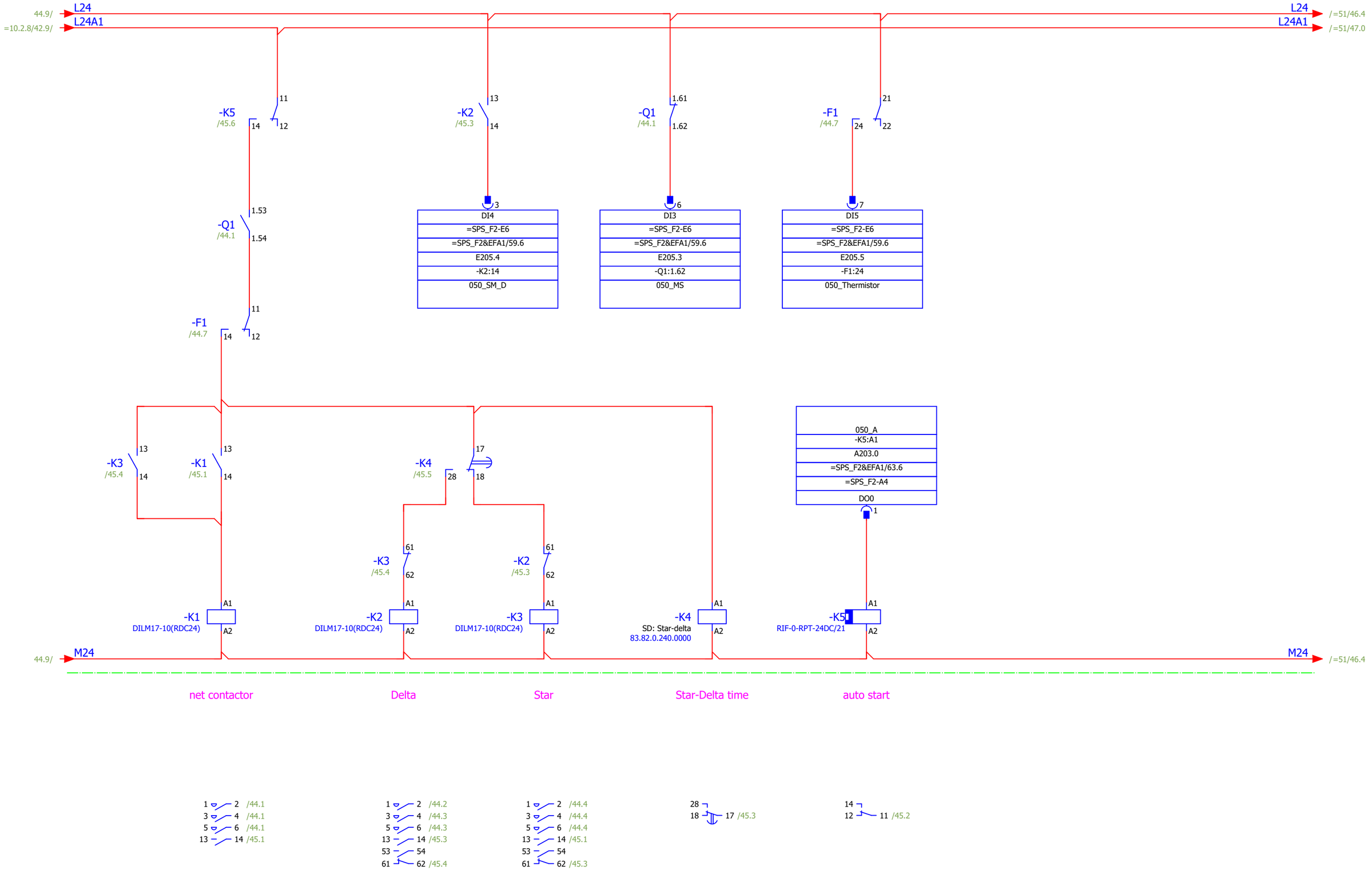

			Date	12.12.2019	Mixed feed plant Golden Poultry	BEYTEC ... your gateway to success	Steuerstromkreis Trogkettenförderer
			Ed.	willen	Field 2		
			Appr				
Modification	Date	Name	Original	V:\EPLAN\Projekte\Company\Beytec\2018\Feed Mill Alssad.elk	Replaced by		

= 50
+ F22
1 : 1
Part II
Page 45
Page 605

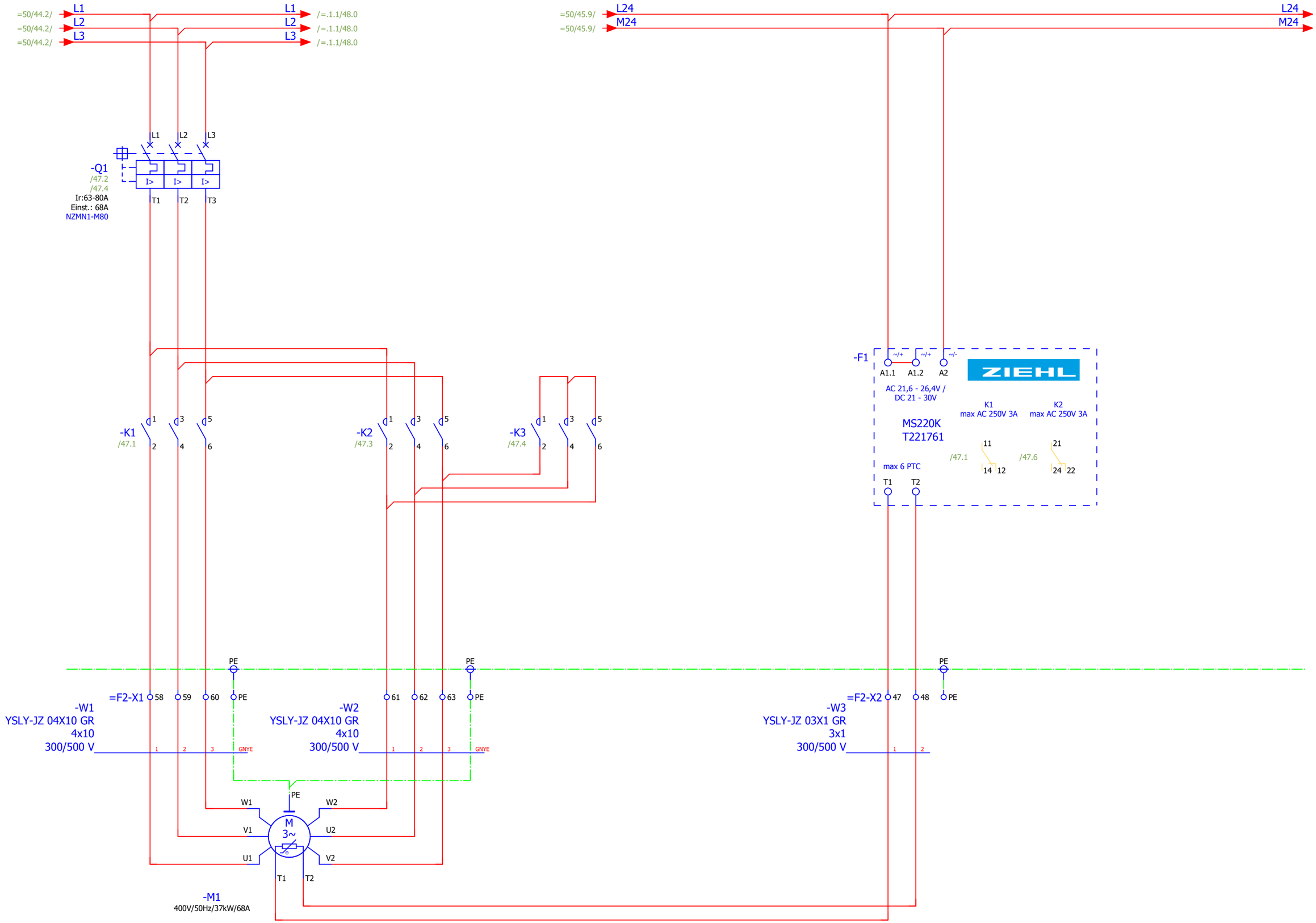
=50/44.2/ L1
=50/44.2/ L2
=50/44.2/ L3
L1 /=.1.1/48.0
L2 /=.1.1/48.0
L3 /=.1.1/48.0
=50/45.9/ L24
=50/45.9/ M24
L24 /47.0
M24 /47.0
-Q1
/47.2
/47.4
Ir:63-80A
Einst.: 68A
NZMN1-M80
I>
T1 T2 T3
-K1
/47.1
-K2
/47.3
-K3
/47.4
-F1
~/+ ~/+ ~/-
A1.1 A1.2 A2
ZIEHL
AC 21,6 - 26,4V /
DC 21 - 30V
MS220K
T221761
K1
max AC 250V 3A
K2
max AC 250V 3A
/47.1
/47.6
max 6 PTC
T1 T2
PE
=F2-X1 58 59 60 PE
-W1
YSLY-JZ 04X10 GR
4x10
300/500 V
61 62 63 PE
-W2
YSLY-JZ 04X10 GR
4x10
300/500 V
=F2-X2 47 48 PE
-W3
YSLY-JZ 03X1 GR
3x1
300/500 V
GNYE
W1 W2
V1 U2
U1 V2
M
3~
T1 T2
-M1
400V/50Hz/37kW/68A

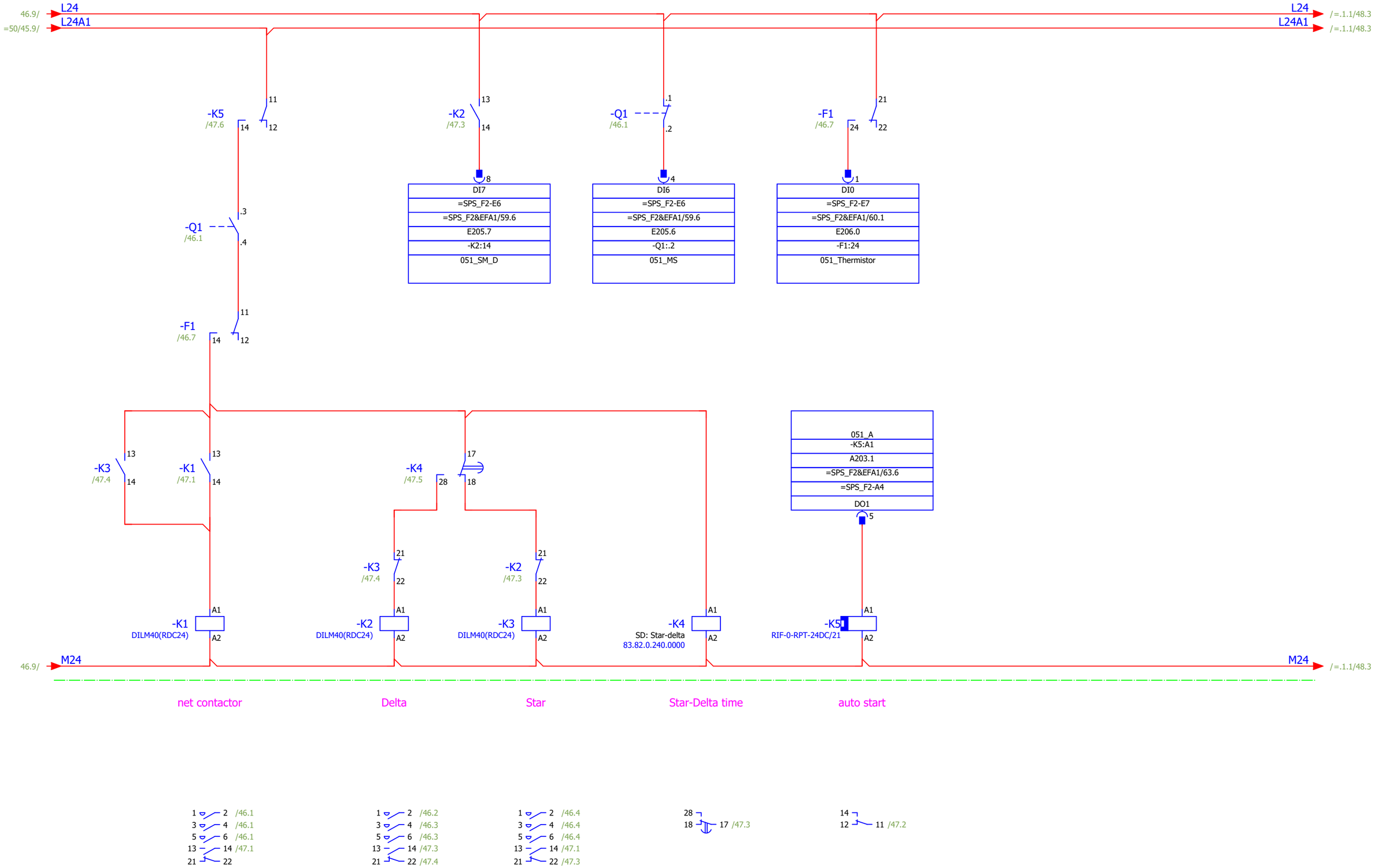

			Date	12.12.2019	Mixed feed plant Golden Poultry	BEYTEC	Steuerstromkreis Trogkettenförderer		= 51
			Ed.	willen					+ F22
			Appr		Field 2	... your gateway to success		1 : 1	Part II	Page 47
Modification	Date	Name	Original	V:\EPLAN\Projekte\Company\Replace\Beytec\2018\Feed Mill Alssad.elk	Replaced by				Page 605

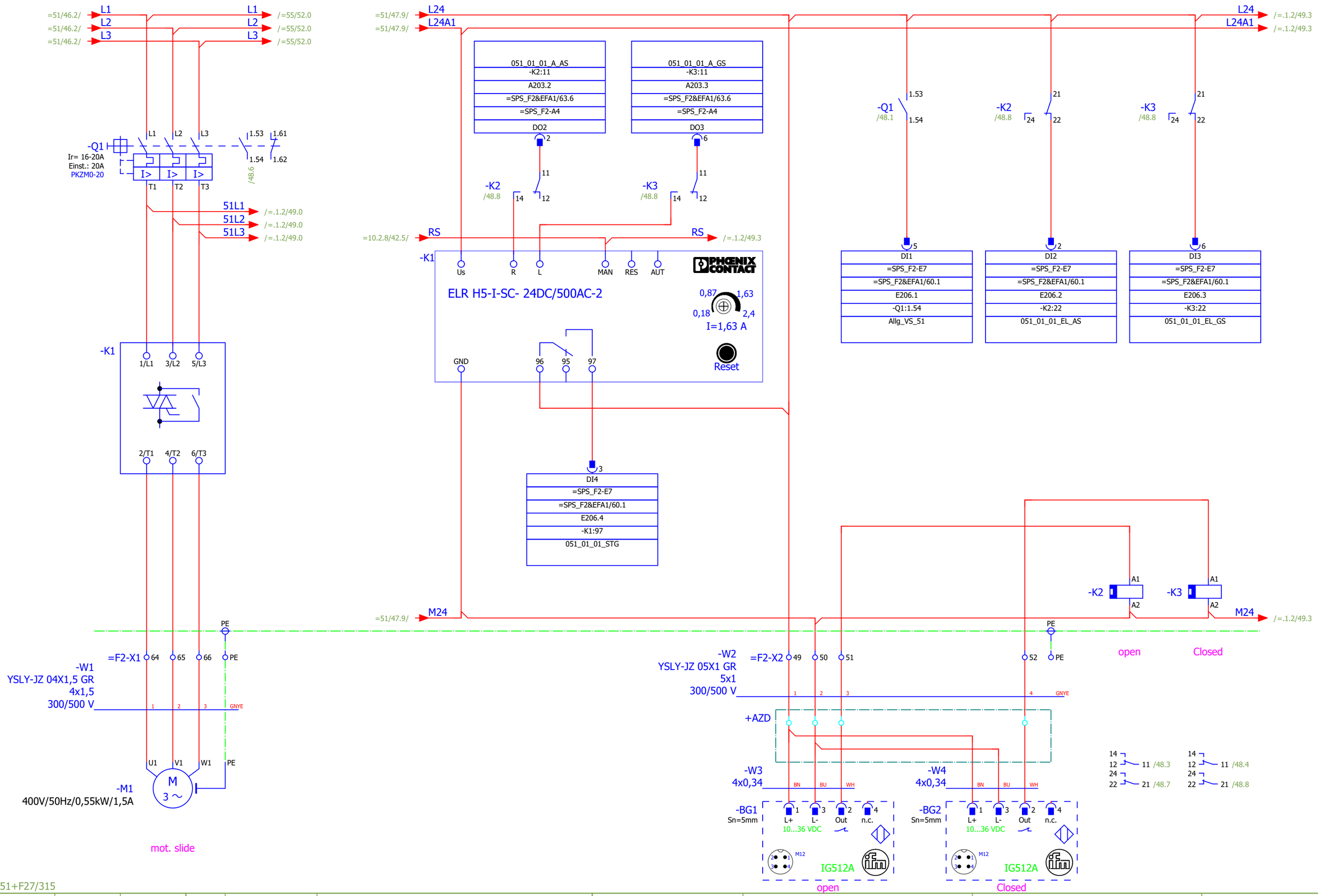

=51+F27/315

=.1.2/49

			Date	12.12.2019	Mixed feed plant Golden Poultry	BEYTEC ... your gateway to success	mot. slide 1
			Ed.	willen			
			Appr		Field 2		
Modification	Date	Name	Original	V:\EPLAN\Projekte\Company\Replace\Beytec\2018\Feed Mill Alssad.elk	Replaced by		

= 51.1.1
+ F22
1 : 1
Part II
Page 48
Page 605

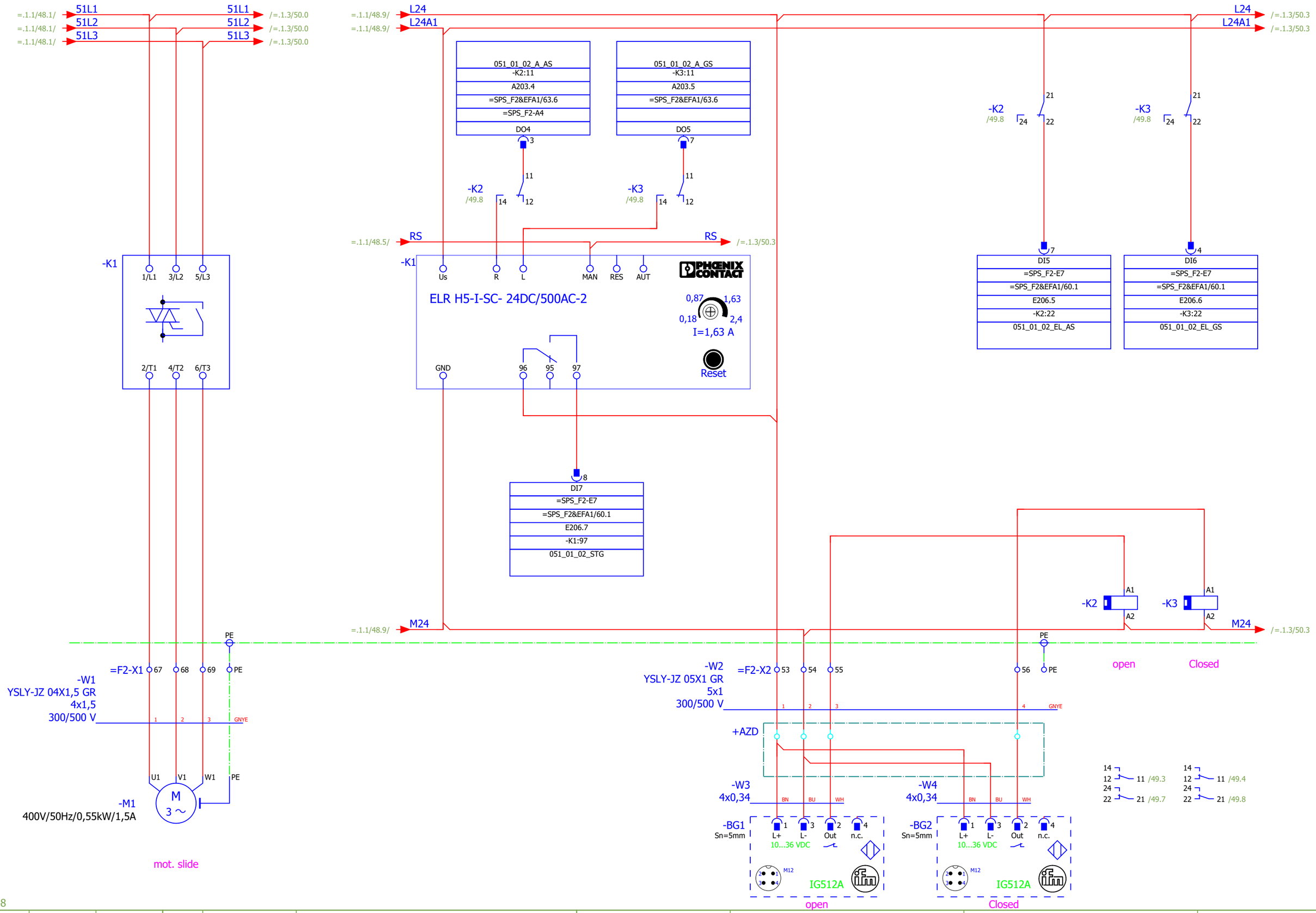

=.1.1/48 =.1.3/50

			Date	12.12.2019	Mixed feed plant Golden Poultry	BEYTEC ... your gateway to success	mot. slide	= 51.1.2	
			Ed.	willen				+ F22	
			Appr		Field 2			1 : 1 Part II	Page 49
Modification	Date	Name	Original	V:\EPLAN\Projekte\Company\Replace\Beytec\2018\Feed Mill Alssad.elk	Replaced by				Page 605

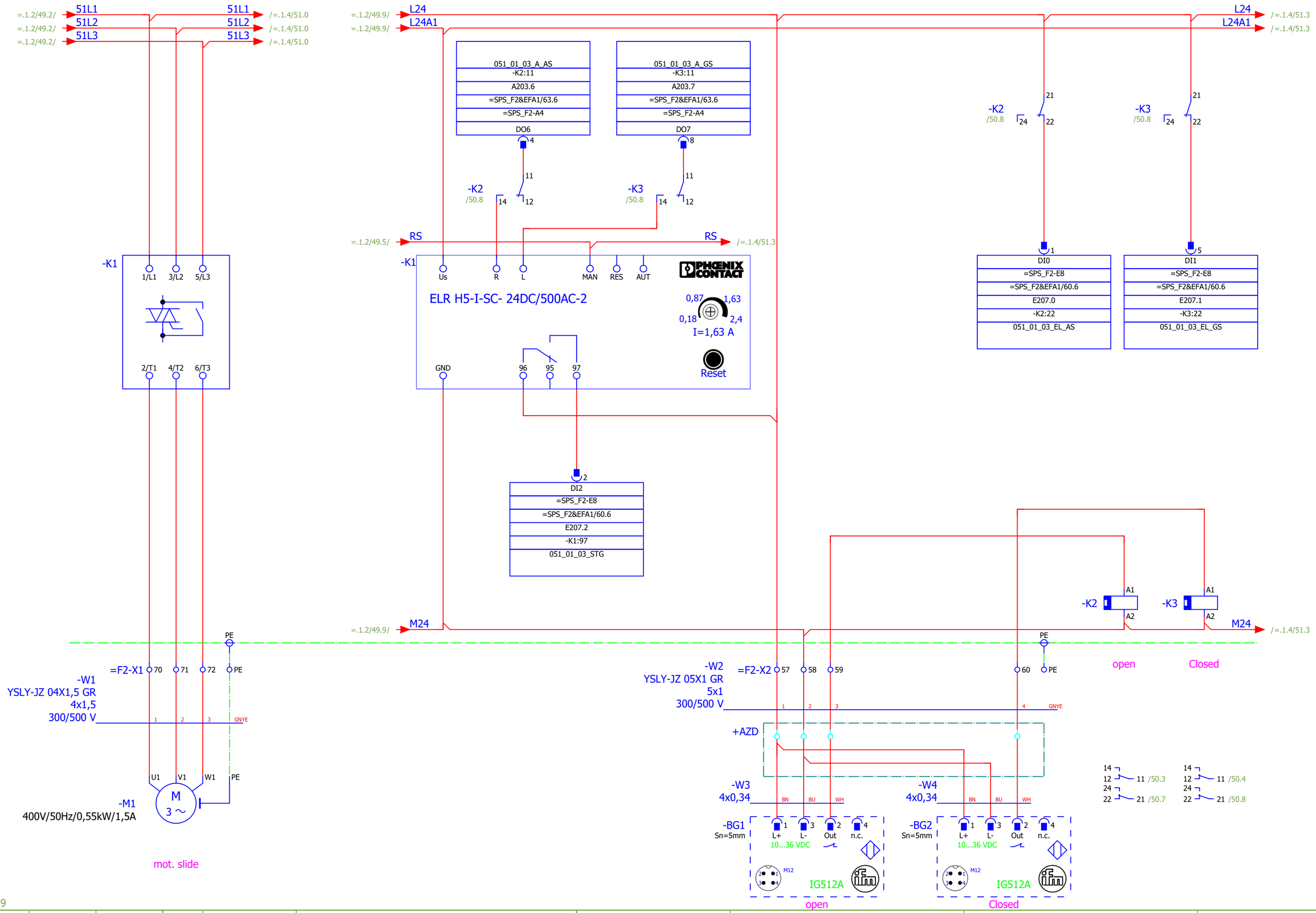

=.1.2/49

=.1.4/51

			Date	12.12.2019	Mixed feed plant Golden Poultry	BEYTEC ... your gateway to success	mot. slide
			Ed.	willen			
			Appr		Field 2		
Modification	Date	Name	Original	V:\EPLAN\Projekte\Company\Replace\Beytec\2018\Feed Mill Alssad.elk	Replaced by		

= 51.1.3
+ F22
1 : 1
Part II
Page 50
Page 605

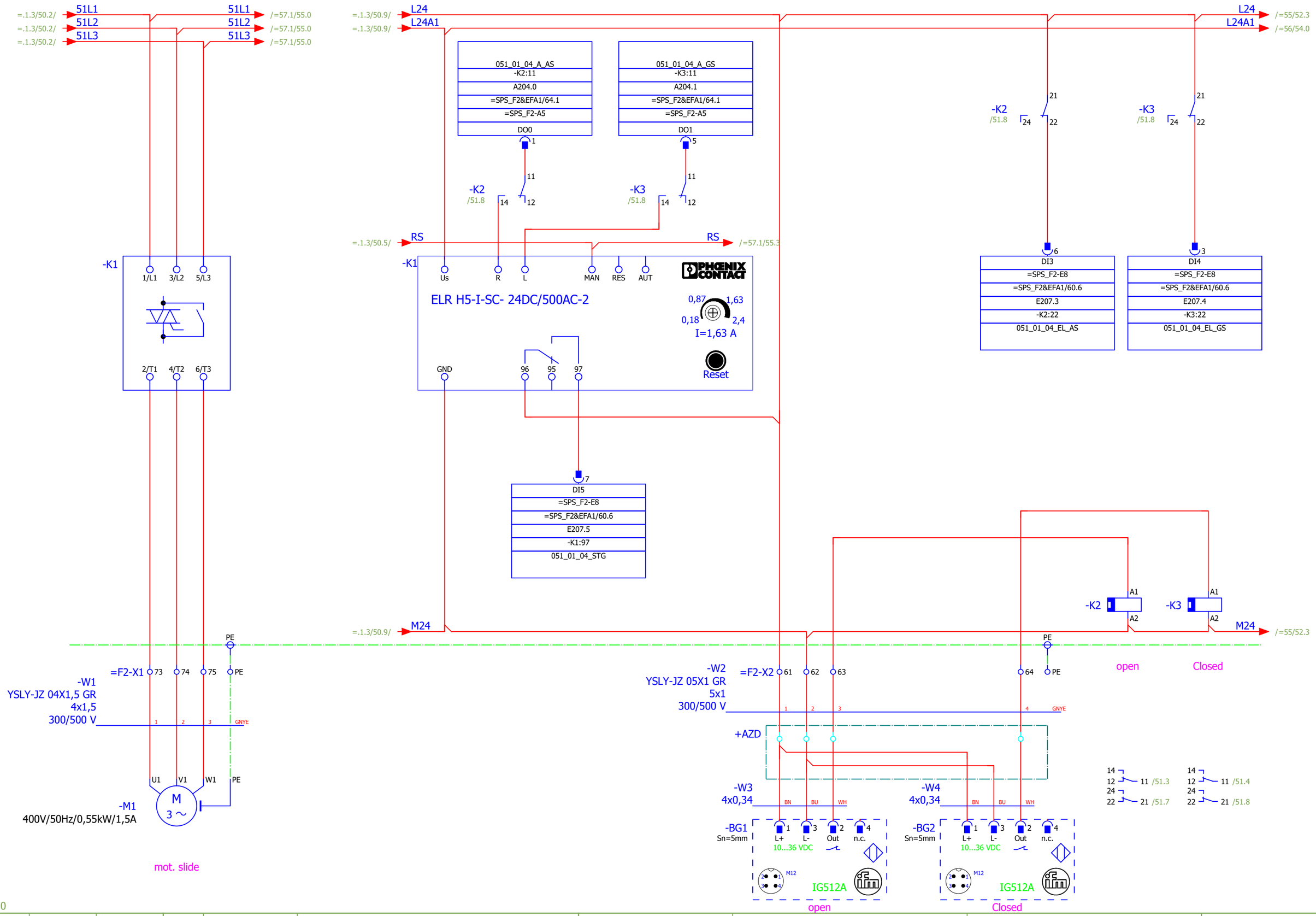

=.1.3/50

=55/52

			Date	12.12.2019	Mixed feed plant Golden Poultry	BEYTEC ... your gateway to success	mot. slide
			Ed.	willen			
			Appr		Field 2		
Modification	Date	Name	Original	V:\EPLAN\Projekte\Company\Replace\Beytec\2018\Feed Mill Alssad.elk	Replaced by		

= 51.1.4
+ F22
1 : 1
Part II
Page 51
Page 605

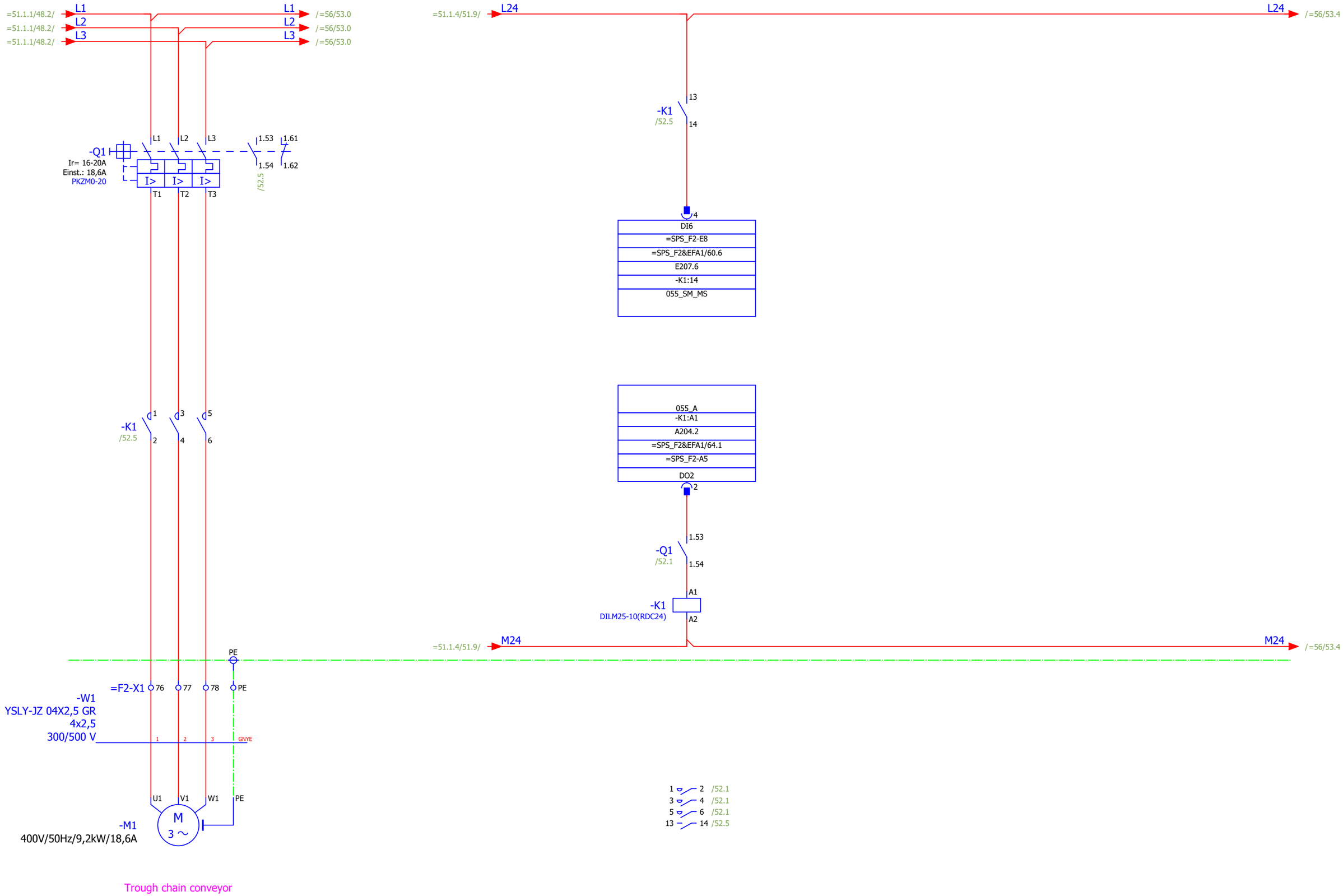

Trough chain conveyor

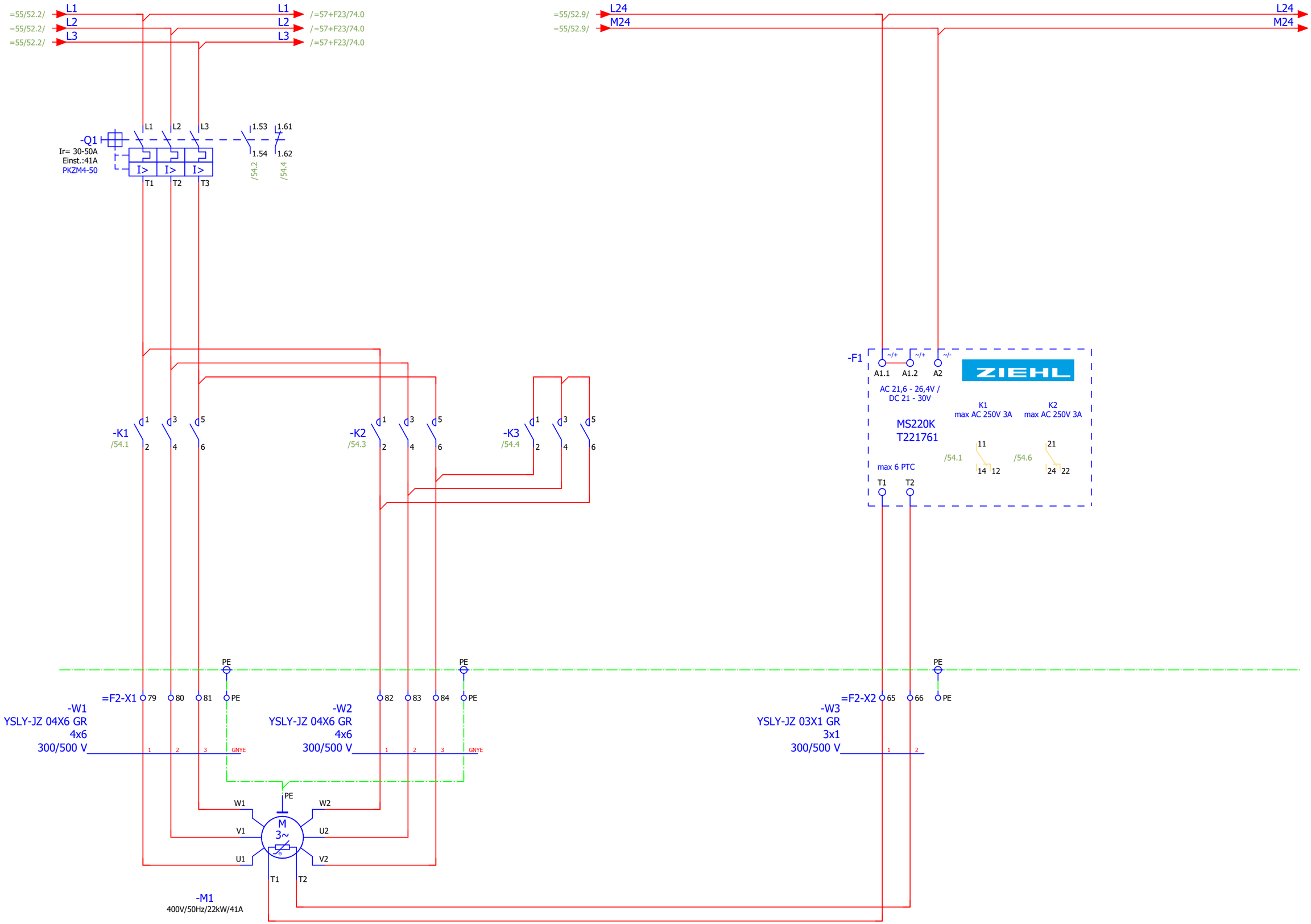
=55/52.2/ L1
=55/52.2/ L2
=55/52.2/ L3
L1 /=57+F23/74.0
L2 /=57+F23/74.0
L3 /=57+F23/74.0
=55/52.9/ L24
=55/52.9/ M24
L24 /54.0
M24 /54.0
-Q1
Ir= 30-50A
Einst.:41A
PKZM4-50
I> I> I>
L1 L2 L3
T1 T2 T3
1.53 1.61
1.54 1.62
/54.2
/54.4
-K1
/54.1
-K2
/54.3
-K3
/54.4
-F1
~/+ ~/+ ~/-
A1.1 A1.2 A2
ZIEHL
AC 21,6 - 26,4V /
DC 21 - 30V
MS220K
T221761
K1
max AC 250V 3A
K2
max AC 250V 3A
/54.1
/54.6
max 6 PTC
T1 T2
PE
=F2-X1 79 80 81 PE
-W1
YSLY-JZ 04X6 GR
4x6
300/500 V
82 83 84 PE
-W2
YSLY-JZ 04X6 GR
4x6
300/500 V
=F2-X2 65 66 PE
-W3
YSLY-JZ 03X1 GR
3x1
300/500 V
GNYE
W1 W2
V1 U2
U1 V2
M
3~
T1 T2
-M1
400V/50Hz/22kW/41A

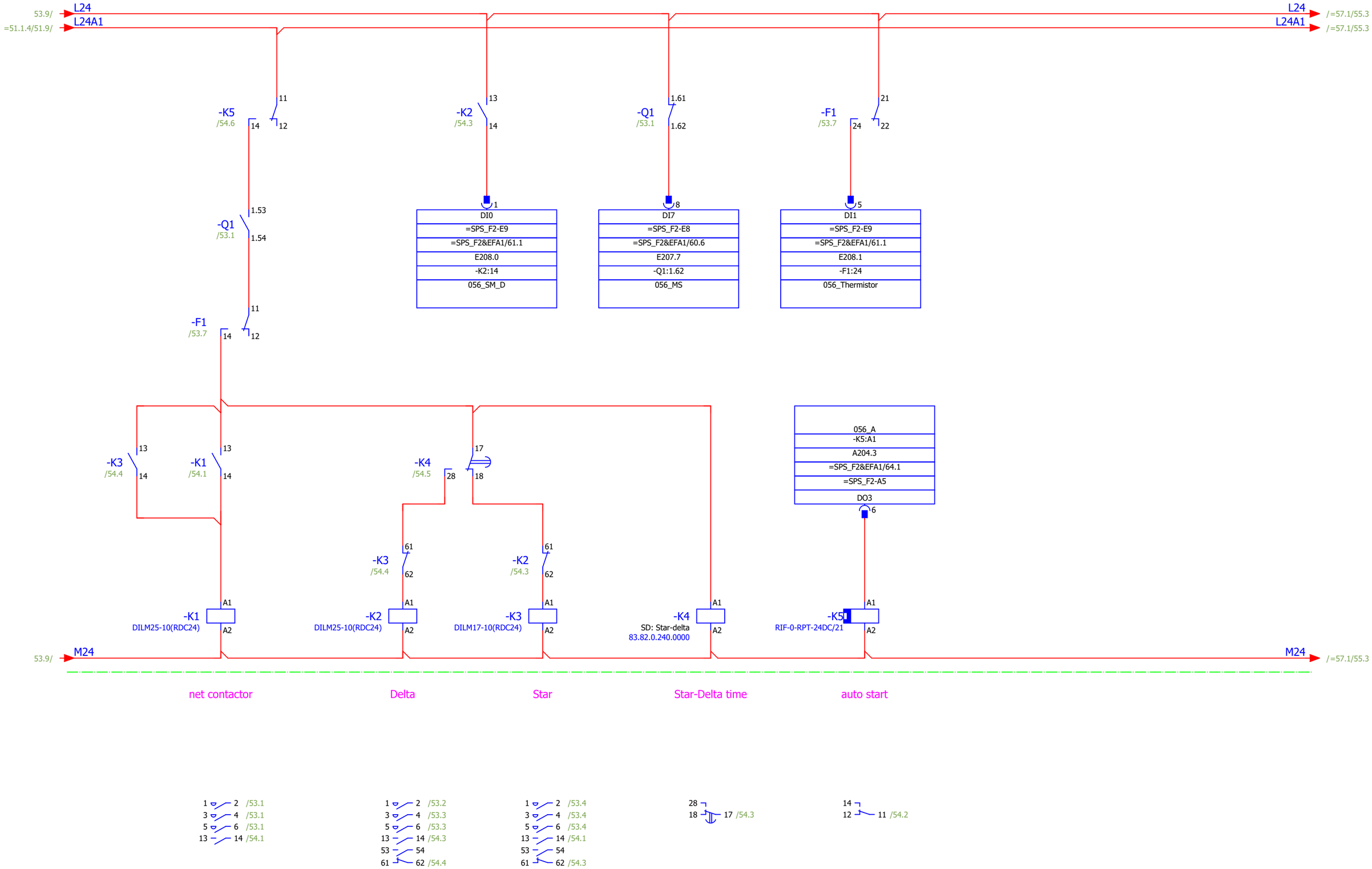

			Date	12.12.2019	Mixed feed plant Golden Poultry	BEYTEC ... your gateway to success	Steuerstromkreis Trogkettenförderer		= 56
			Ed.	willen					+ F22
			Appr		Field 2			1 : 1	Part II	Page 54
Modification	Date	Name	Original	V:\EPLAN\Projekte\Company\Beytec\2018\Feed Mill Alssad.elk	Replaced by				Page 605

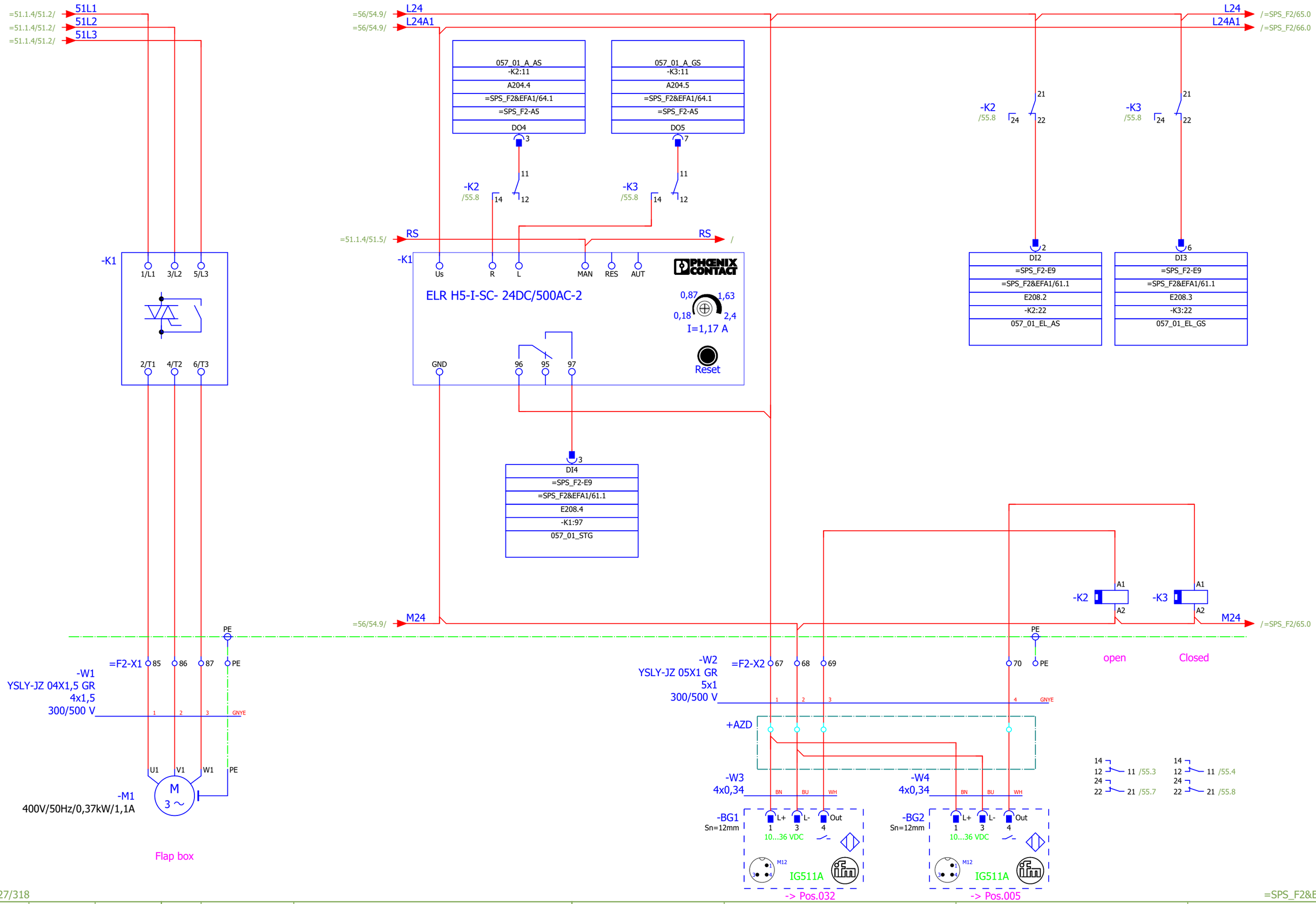

=57+F27/318

=SPS_F2&EFA1/56

			Date	12.12.2019	Mixed feed plant Golden Poultry	BEYTEC ... your gateway to success	Flap box	= 57.1
			Ed.	willen	Field 2			+ F22
			Appr				1 : 1	Part II
Modification	Date	Name	Original	V:\EPLAN\Projekte\Company\Beytec\2018\Feed Mill Alssad.elk	Replaced by	Replaced by		Page 55 / Page 605

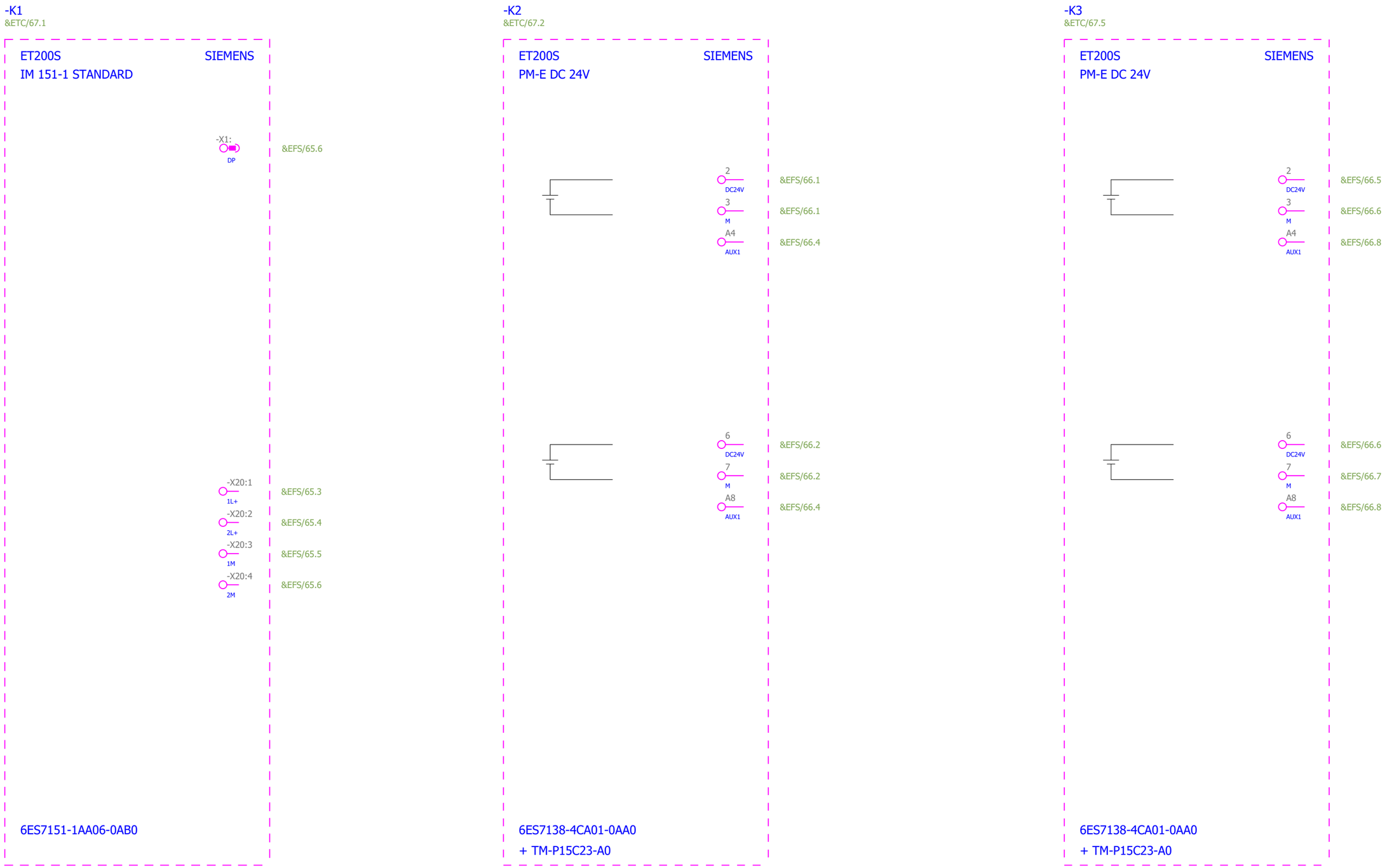
-K1
&ETC/67.1
ET200S
SIEMENS
IM 151-1 STANDARD
-X1:
DP
&EFS/65.6
-X20:1
1L+
&EFS/65.3
-X20:2
2L+
&EFS/65.4
-X20:3
1M
&EFS/65.5
-X20:4
2M
&EFS/65.6
6ES7151-1AA06-0AB0
-K2
&ETC/67.2
ET200S
SIEMENS
PM-E DC 24V
2
DC24V
&EFS/66.1
3
M
&EFS/66.1
A4
AUX1
&EFS/66.4
6
DC24V
&EFS/66.2
7
M
&EFS/66.2
A8
AUX1
&EFS/66.4
6ES7138-4CA01-0AA0
+ TM-P15C23-A0
-K3
&ETC/67.5
ET200S
SIEMENS
PM-E DC 24V
2
DC24V
&EFS/66.5
3
M
&EFS/66.6
A4
AUX1
&EFS/66.8
6
DC24V
&EFS/66.6
7
M
&EFS/66.7
A8
AUX1
&EFS/66.8
6ES7138-4CA01-0AA0
+ TM-P15C23-A0

-E1
&ETC/67.2

ET200S SIEMENS
8 DI DC 24 S

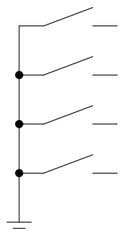

E200.0	1 DI0	=F01+F21&EFS/GB3=GB3+F21-F1:14	Allg_230V_F21
E200.2	2 DI2	=GD1+F21&EFS/GD1=GD1+F21-F13:3	Allg_24V_NA_F21_F
E200.4	3 DI4	=F01+F21&EFS/F01=F01+F21-S2:.2	Allg_NA_T_F21
E200.6	4 DI6	=F01+F21&EFS/F01=F01+EXT-S2:12	Allg_NA_T_Reserv_2

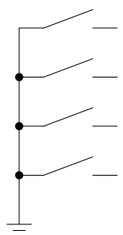

E200.1	5 DI1	=GD1+F21&EFS/GD1=GD1+F21-F2:3	Allg_24V_F21
E200.3	6 DI3	=F01+F21&EFS/F01=F01+F21-K1:92	Allg_NA_G_F21
E200.5	7 DI5	=F01+F21&EFS/F01=F01+EXT-S1:12	Allg_NA_T_Reserv_1
E200.7	8 DI7	=F01+F21&EFS/GB3=GB3+F21-B1:14	Allg_Phasen_F21

6ES7131-4BF00-0AA0
+ TM-E15C24-01

-E2
&ETC/67.2

ET200S SIEMENS
8 DI DC 24 V

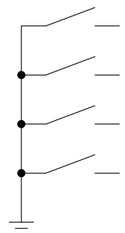

E201.0	1 DI0	=7.1&EFS/27.6=7.1-Q1:1.54	Allg_VS_007
E201.2	2 DI2	=7.1&EFS/27.8=7.1-K3:22	007_01_04_EL_GS
E201.4	3 DI4	=8.10.4&EFS/29.8=8.10.4-K1:14	008_10_04_SM_MS
E201.6	4 DI6	=8.10.6&EFS/30.8=8.10.6-K1:14	008_10_06_SM_MS

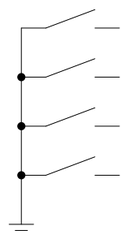

E201.1	5 DI1	=7.1&EFS/27.7=7.1-K2:22	007_01_04_EL_AS
E201.3	6 DI3	=7.1&EFS/27.4=7.1-K1:97	007_01_04_STG
E201.5	7 DI5	=8.10.5&EFS/29.8=8.10.5-K1:14	008_10_05_SM_MS
E201.7	8 DI7	=8.10.7&EFS/31.8=8.10.7-K1:14	008_10_07_SM_MS

6ES7131-4BF00-0AA0
+ TM-E15C24-01

-E3
&ETC/67.3

ET200S SIEMENS
8 DI DC 24 V

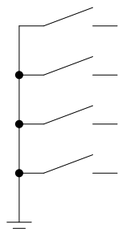

E202.0	1 DI0	=8.10.8&EFS/32.8=8.10.8-K1:14	008_10_08_SM_MS
E202.2	2 DI2	=9.4&EFS/33.5=9.4-K1:14	009_04_SM_MS
E202.4	3 DI4	=9.5&EFS/34.5=9.5-K1:14	009_05_SM_MS
E202.6	4 DI6	=9.6&EFS/35.5=9.6-K1:14	009_06_SM_MS

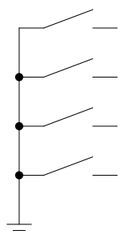

E202.1	5 DI1	=9.4&EFS/33.8=9.4+EXT-S1:12	Allg_009_04_NA_T
E202.3	6 DI3	=9.5&EFS/34.8=9.5+EXT-S1:12	Allg_009_05_NA_T
E202.5	7 DI5	=9.6&EFS/35.8=9.6+EXT-S1:12	Allg_009_06_NA_T
E202.7	8 DI7	=9.7&EFS/36.8=9.7+EXT-S1:12	Allg_009_07_NA_T

6ES7131-4BF00-0AA0
+ TM-E15C24-01

-E4
&ETC/67.3

ET200S SIEMENS
8 DI DC 24 V

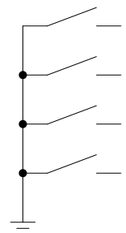

E203.0	1 DI0	=9.7&EFS/36.5=9.7-K1:14	009_07_SM_MS
E203.2	2 DI2	=9.8&EFS/37.5=9.8-K1:14	009_08_SM_MS
E203.4	3 DI4	=10.2.4&EFS/38.5=10.2.4-K3:22	010_02_04_EL_GS
E203.6	4 DI6	=10.2.5&EFS/39.5=10.2.5-K2:22	010_02_05_EL_AS

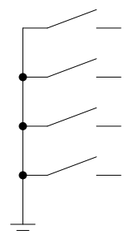

E203.1	5 DI1	=9.8&EFS/37.8=9.8+EXT-S1:12	Allg_009_08_NA_T
E203.3	6 DI3	=10.2.4&EFS/38.5=10.2.4-K2:22	010_02_04_EL_AS
E203.5	7 DI5	=10.2.4&EFS/38.8=10.2.4-K1:97	010_02_04_STG
E203.7	8 DI7	=10.2.5&EFS/39.5=10.2.5-K3:22	010_02_05_EL_GS

6ES7131-4BF00-0AA0
+ TM-E15C24-01

-E5
&ETC/67.3

ET200S SIEMENS
8 DI DC 24 V

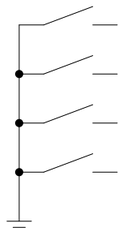

E204.0	1 DI0	=10.2.5&EFS/39.1 =10.2.5-K1:97	010_02_05_STG
E204.2	2 DI2	=10.2.6&EFS/40.1 =10.2.6-K3:22	010_02_06_EL_GS
E204.4	3 DI4	=10.2.7&EFS/41.1 =10.2.7-K2:22	010_02_07_EL_AS
E204.6	4 DI6	=10.2.7&EFS/41.1 =10.2.7-K1:97	010_02_07_STG

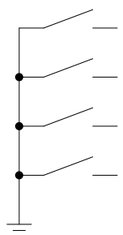

E204.1	5 DI1	=10.2.6&EFS/40.1 =10.2.6-K2:22	010_02_06_EL_AS
E204.3	6 DI3	=10.2.6&EFS/40.1 =10.2.6-K1:97	010_02_06_STG
E204.5	7 DI5	=10.2.7&EFS/41.1 =10.2.7-K3:22	010_02_07_EL_GS
E204.7	8 DI7	=10.2.8&EFS/42.1 =10.2.8-K2:22	010_02_08_EL_AS

6ES7131-4BF00-0AA0
+ TM-E15C24-01

-E6
&ETC/67.4

ET200S SIEMENS
8 DI DC 24 V

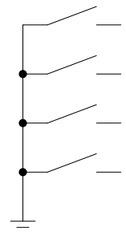

E205.0	1 DI0	=10.2.8&EFS/42.1 =10.2.8-K3:22	010_02_08_EL_GS
E205.2	2 DI2	=13&EFS/43.5 =13-K1:14	013_SM_MS
E205.4	3 DI4	=50&EFS/45.3 =50-K2:14	050_SM_D
E205.6	4 DI6	=51&EFS/47.4 =51-Q1:.2	051_MS

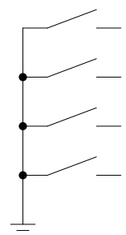

E205.1	5 DI1	=10.2.8&EFS/42.1 =10.2.8-K1:97	010_02_08_STG
E205.3	6 DI3	=50&EFS/45.4 =50-Q1:1.62	050_MS
E205.5	7 DI5	=50&EFS/45.6 =50-F1:24	050_Thermistor
E205.7	8 DI7	=51&EFS/47.3 =51-K2:14	051_SM_D

6ES7131-4BF00-0AA0
+ TM-E15C24-01

-E7
&ETC/67.4

ET200S SIEMENS
8 DI DC 24 V

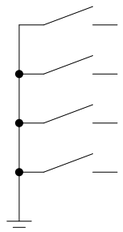

E206.0	1 DI0	=51&EFS/47.6 =51-F1:24	051_Thermistor
E206.2	2 DI2	=51.1.1&EFS/48.5 =51.1.1-K2:22	051_01_01_EL_AS
E206.4	3 DI4	=51.1.1&EFS/48.5 =51.1.1-K1:97	051_01_01_STG
E206.6	4 DI6	=51.1.2&EFS/49.5 =51.1.2-K3:22	051_01_02_EL_GS

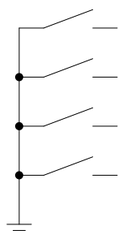

E206.1	5 DI1	=51.1.1&EFS/48.5 =51.1.1-Q1:1.54	Allg_VS_51
E206.3	6 DI3	=51.1.1&EFS/48.5 =51.1.1-K3:22	051_01_01_EL_GS
E206.5	7 DI5	=51.1.2&EFS/49.5 =51.1.2-K2:22	051_01_02_EL_AS
E206.7	8 DI7	=51.1.2&EFS/49.5 =51.1.2-K1:97	051_01_02_STG

6ES7131-4BF00-0AA0
+ TM-E15C24-01

-E8
&ETC/67.5

ET200S SIEMENS
8 DI DC 24 V

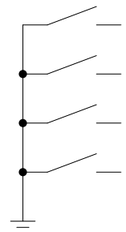

E207.0	1 DI0	=51.1.3&EFS/50.5 =51.1.3-K2:22	051_01_03_EL_AS
E207.2	2 DI2	=51.1.3&EFS/50.5 =51.1.3-K1:97	051_01_03_STG
E207.4	3 DI4	=51.1.4&EFS/51.5 =51.1.4-K3:22	051_01_04_EL_GS
E207.6	4 DI6	=55&EFS/52.5 =55-K1:14	055_SM_MS

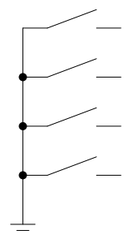

E207.1	5 DI1	=51.1.3&EFS/50.5 =51.1.3-K3:22	051_01_03_EL_GS
E207.3	6 DI3	=51.1.4&EFS/51.5 =51.1.4-K2:22	051_01_04_EL_AS
E207.5	7 DI5	=51.1.4&EFS/51.5 =51.1.4-K1:97	051_01_04_STG
E207.7	8 DI7	=56&EFS/54.4 =56-Q1:1.62	056_MS

6ES7131-4BF00-0AA0
+ TM-E15C24-01

-E9
&ETC/67.5

ET200S SIEMENS
8 DI DC 24 V

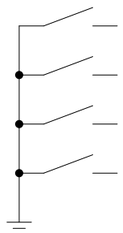

E208.0	1 DI0	=56&EFS/54.3 =56-K2:14	056_SM_D
E208.2	2 DI2	=57.1&EFS/55.7 =57.1-K2:22	057_01_EL_AS
E208.4	3 DI4	=57.1&EFS/55.4 =57.1-K1:97	057_01_STG
E208.6	4 DI6		Spare

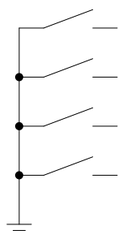

E208.1	5 DI1	=56&EFS/54.6 =56-F1:24	056_Thermistor
E208.3	6 DI3	=57.1&EFS/55.8 =57.1-K3:22	057_01_EL_GS
E208.5	7 DI5		Spare
E208.7	8 DI7		Spare

6ES7131-4BF00-0AA0
+ TM-E15C24-01

			Date	12.12.2019	Mixed feed plant Golden Poultry	BEYTEC ... your gateway to success	overview inputs		= SPS_F2
			Ed.	willen	Field 2				+ F22
			Appr					1 : 1	Part II
Modification	Date	Name	Original	V:\EPLAN\Projekte\Company\Alssad\Beytec\2018\Feed Mill Alssad.elk	Replaced by				Page 61 / Page 605

-A1
&ETC/67.6

ET200S SIEMENS
8 DO DC24V 0,5A

A200.0 1/QX.0/DO0	1 DO0	=7.1&EFS/27.2=7.1-K1:MAN	Allg_Reset_F22
A200.2 2/QX.2/DO2	2 DO2	=7.1&EFS/27.5=7.1-K3:11	007_01_04_A_GS
A200.4 3/QX.4/DO4	3 DO4	=8.10.5&EFS/29.5=8.10.5-K1:A1	008_10_05_A
A200.6 4/QX.6/DO6	4 DO6	=8.10.7&EFS/31.5=8.10.7-K1:A1	008_10_07_A
A200.1 5/QX.1/DO1	5 DO1	=7.1&EFS/27.4=7.1-K2:11	007_01_04_A_AS
A200.3 6/QX.3/DO3	6 DO3	=8.10.4&EFS/28.5=8.10.4-K1:A1	008_10_04_A
A200.5 7/QX.5/DO5	7 DO5	=8.10.6&EFS/30.5=8.10.6-K1:A1	008_10_06_A
A200.7 8/QX.7/DO7	8 DO7	=8.10.8&EFS/32.5=8.10.8-K1:A1	008_10_08_A

6ES7132-4BF00-0AA0
+ TM-E15C24-01

-A2
&ETC/67.6

ET200S SIEMENS
8 DO DC24V 0,5A

A201.0 1/QX.0/DO0	1 DO0	=9.4&EFS/33.5=9.4-K1:A1	009_04_A
A201.2 2/QX.2/DO2	2 DO2	=9.6&EFS/35.5=9.6-K1:A1	009_06_A
A201.4 3/QX.4/DO4	3 DO4	=9.8&EFS/37.5=9.8-K1:A1	009_08_A
A201.6 4/QX.6/DO6	4 DO6	=10.2.4&EFS/38.5=10.2.4-K3:11	010_02_04_A_GS
A201.1 5/QX.1/DO1	5 DO1	=9.5&EFS/34.5=9.5-K1:A1	009_05_A
A201.3 6/QX.3/DO3	6 DO3	=9.7&EFS/36.5=9.7-K1:A1	009_07_A
A201.5 7/QX.5/DO5	7 DO5	=10.2.4&EFS/38.5=10.2.4-K2:11	010_02_04_A_AS
A201.7 8/QX.7/DO7	8 DO7	=10.2.5&EFS/39.5=10.2.5-K2:11	010_02_05_A_AS

6ES7132-4BF00-0AA0
+ TM-E15C24-01

-A3
&ETC/67.6

ET200S SIEMENS
8 DO DC24V 0,5A

A202.0	1/QX.0/DO0	1 DO0	=10.2.5&EFS/39.5 =10.2.5-K3:11	010_02_05_A_GS
A202.2	2/QX.2/DO2	2 DO2	=10.2.6&EFS/40.5 =10.2.6-K3:11	010_02_06_A_GS
A202.4	3/QX.4/DO4	3 DO4	=10.2.7&EFS/41.5 =10.2.7-K3:11	010_02_07_A_GS
A202.6	4/QX.6/DO6	4 DO6	=10.2.8&EFS/42.5 =10.2.8-K3:11	010_02_08_A_GS
A202.1	5/QX.1/DO1	5 DO1	=10.2.6&EFS/40.5 =10.2.6-K2:11	010_02_06_A_AS
A202.3	6/QX.3/DO3	6 DO3	=10.2.7&EFS/41.5 =10.2.7-K2:11	010_02_07_A_AS
A202.5	7/QX.5/DO5	7 DO5	=10.2.8&EFS/42.5 =10.2.8-K2:11	010_02_08_A_AS
A202.7	8/QX.7/DO7	8 DO7	=13&EFS/43.5 =13-K1:A1	013_A

6ES7132-4BF00-0AA0
+ TM-E15C24-01

-A4
&ETC/67.7

ET200S SIEMENS
8 DO DC24V 0,5A

A203.0	1/QX.0/DO0	1 DO0	=50&EFS/45.6 =50-K5:A1	050_A
A203.2	2/QX.2/DO2	2 DO2	=51.1.1&EFS/48.5 =51.1.1-K2:11	051_01_01_A_AS
A203.4	3/QX.4/DO4	3 DO4	=51.1.2&EFS/49.5 =51.1.2-K2:11	051_01_02_A_AS
A203.6	4/QX.6/DO6	4 DO6	=51.1.3&EFS/50.5 =51.1.3-K2:11	051_01_03_A_AS
A203.1	5/QX.1/DO1	5 DO1	=51&EFS/47.6 =51-K5:A1	051_A
A203.3	6/QX.3/DO3	6 DO3	=51.1.1&EFS/48.5 =51.1.1-K3:11	051_01_01_A_GS
A203.5	7/QX.5/DO5	7 DO5	=51.1.2&EFS/49.5 =51.1.2-K3:11	051_01_02_A_GS
A203.7	8/QX.7/DO7	8 DO7	=51.1.3&EFS/50.5 =51.1.3-K3:11	051_01_03_A_GS

6ES7132-4BF00-0AA0
+ TM-E15C24-01

-A5
&ETC/67.7

ET200S SIEMENS
8 DO DC24V 0,5A

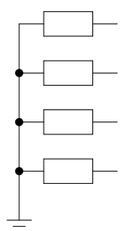

A204.0 1/QX.0/DO0	1 DO0	=51.1.4&EFS/51.5 =51.1.4-K2:11	051_01_04_A_AS
A204.2 2/QX.2/DO2	2 DO2	=55&EFS/52.5 =55-K1:A1	055_A
A204.4 3/QX.4/DO4	3 DO4	=57.1&EFS/55.4 =57.1-K2:11	057_01_A_AS
A204.6 4/QX.6/DO6	4 DO6		Spare

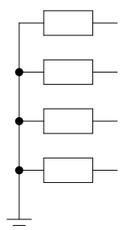

A204.1 5/QX.1/DO1	5 DO1	=51.1.4&EFS/51.5 =51.1.4-K3:11	051_01_04_A_GS
A204.3 6/QX.3/DO3	6 DO3	=56&EFS/54.6 =56-K5:A1	056_A
A204.5 7/QX.5/DO5	7 DO5	=57.1&EFS/55.5 =57.1-K3:11	057_01_A_GS
A204.7 8/QX.7/DO7	8 DO7		Spare

6ES7132-4BF00-0AA0
+ TM-E15C24-01

			Date	12.12.2019	Mixed feed plant Golden Poultry	BEYTEC ... your gateway to success	overview outputs	= SPS_F2
			Ed.	willen	Field 2			+ F22
			Appr				1 : 1	Part II Page 64
Modification	Date	Name	Original	V:\EPLAN\Projekte\Company\Beytec\2018\Feed Mill Alssad.elk	Replaced by			Page 605

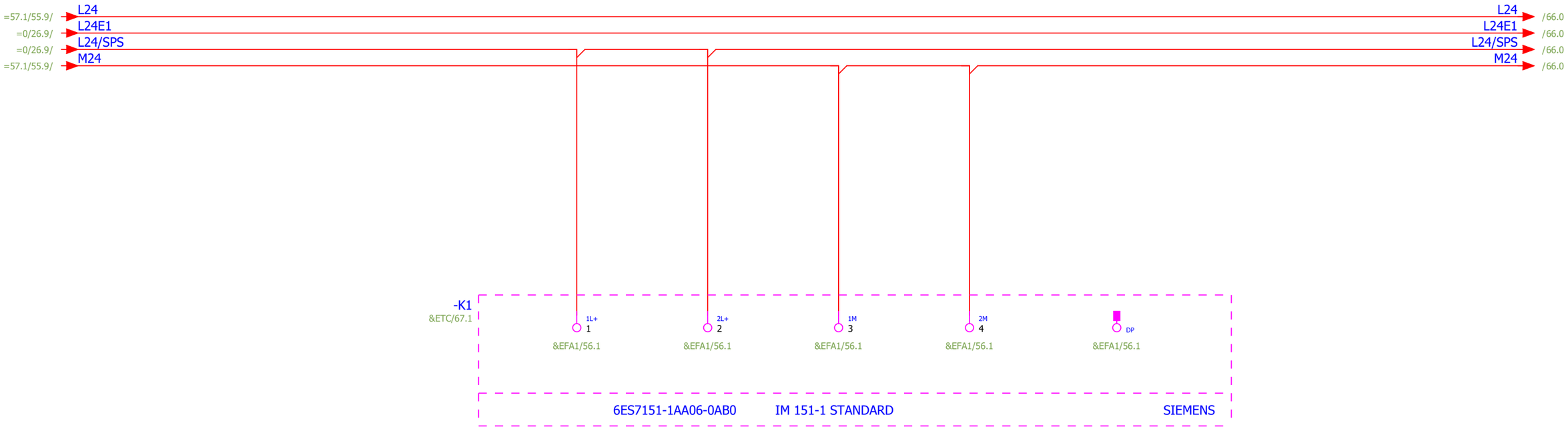
=57.1/55.9/
L24
=0/26.9/
L24E1
=0/26.9/
L24/SPS
=57.1/55.9/
M24
L24
/66.0
L24E1
/66.0
L24/SPS
/66.0
M24
/66.0
-K1
&ETC/67.1
1L+
1
&EFA1/56.1
2L+
2
&EFA1/56.1
1M
3
&EFA1/56.1
2M
4
&EFA1/56.1
DP
&EFA1/56.1
6ES7151-1AA06-0AB0
IM 151-1 STANDARD
SIEMENS

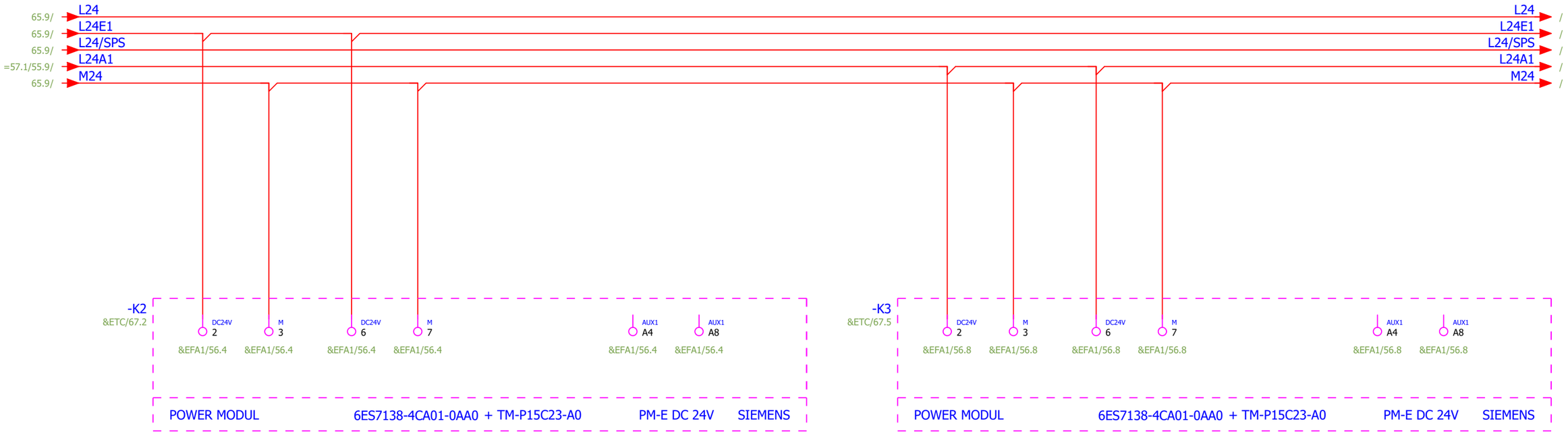

			Date	12.12.2019	Mixed feed plant Golden Poultry	BEYTEC ... your gateway to success	PLC power supply power module		= SPS_F2	
			Ed.	willen					+ F22	
			Appr		Field 2			1 : 1	Part II	Page 66
Modification	Date	Name	Original	V:\EPLAN\Projekte\Company\Alssad\Beytec\2018\Feed Mill Alssad.elk	Replaced by					Page 605

Replaced by BEYTEC

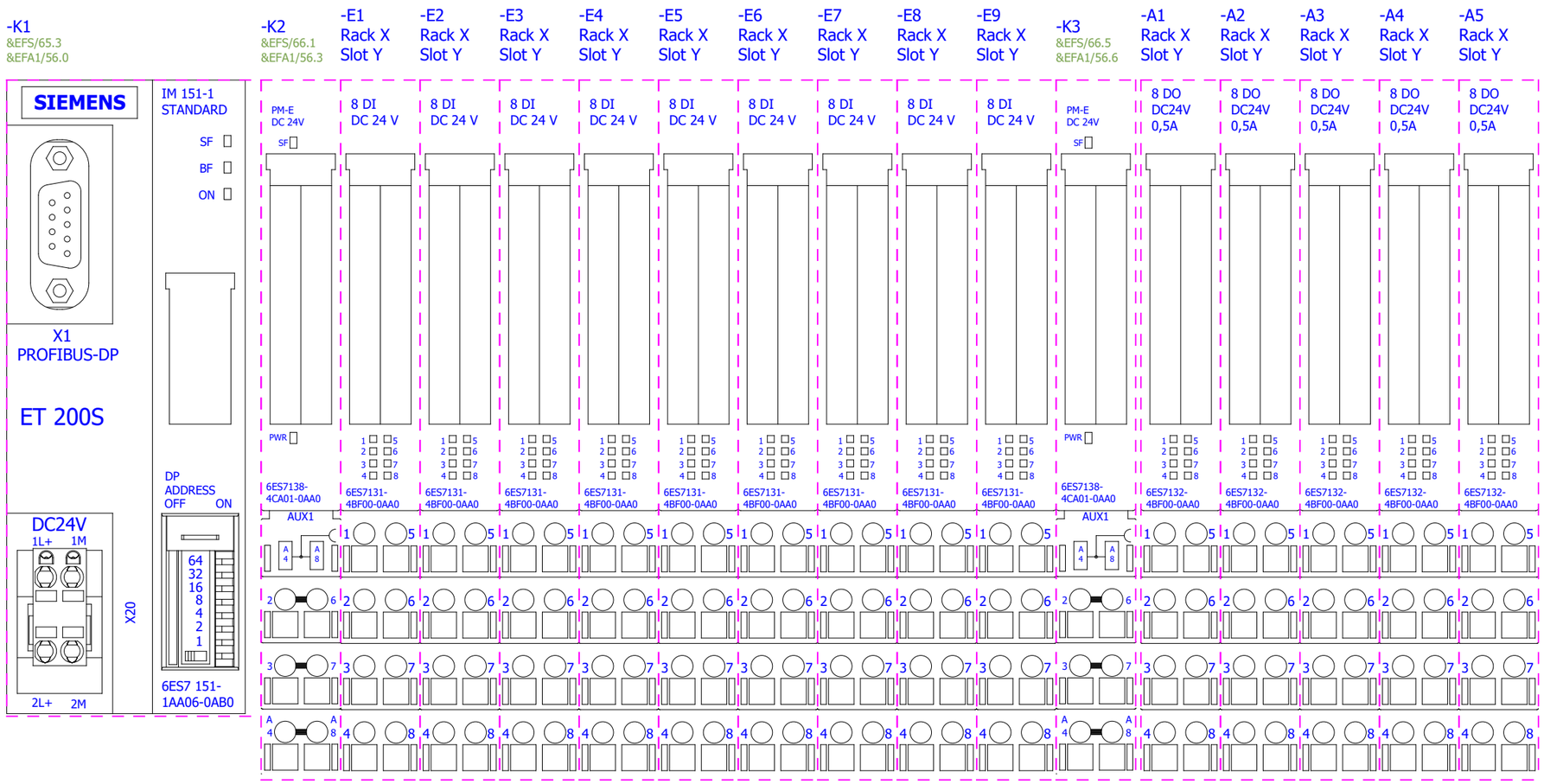
-K1
&EFS/65.3
&EFA1/56.0
SIEMENS
IM 151-1
STANDARD
SF
BF
ON
X1
PROFIBUS-DP
ET 200S
DP
ADDRESS
OFF ON
64
32
16
8
4
2
1
6ES7 151-
1AA06-0AB0
DC24V
1L+ 1M
2L+ 2M
X20
-K2
&EFS/66.1
&EFA1/56.3
PM-E
DC 24V
SF
PWR
6ES7138-
4CA01-0AA0
AUX1
-E1
Rack X
Slot Y
8 DI
DC 24 V
6ES7131-
4BF00-0AA0
-E2
-E3
-E4
-E5
-E6
-E7
-E8
-E9
-K3
&EFS/66.5
&EFA1/56.6
-A1
8 DO
DC24V
0,5A
6ES7132-
4BF00-0AA0
-A2
-A3
-A4
-A5

BEYTEC

... your gateway to success

Company / customer	BeyTec
Project description	Golden Poultry
Job number	Part II
Mounting location	Field 3

Technical data:

Operating voltage	400 V
Operating frequency	50 Hz
Operating current	
Power network	
Control voltage	24VDC
Protection class electrical	SK I
Degree of protection	IP54
Responsible for project	Willen

Created on 21.10.2019

Edit date 12.12.2019 by (short name) willen

Number of pages 605

Table of contents

Column X: An automatically generated page was edited

F06_001_EN

Page	Page description	supplementary page field	Date	Edited by	X
++A1+F23&BAA/68	Title page / cover sheet		12.12.2019	willen	X
++A1+F23&BAB/69	Table of contents : ++A1+F23&BAA/68 - =SPS_F3++A1+F23&EFA1/100		12.12.2019	willen	
++A1+F23&BAB/70	Table of contents : =SPS_F3++A1+F23&EFS/101 - =SPS_F3++A1+F23&ETC/103		12.12.2019	willen	
++A1+F23&BPA/71	Summarized parts list : PXC.2702226 - ETN.PKZM0-4		12.12.2019	willen	X
++A1+F23&BPA/72	Summarized parts list : ETN.PKZM0-XDM12 - SIE.6ES7134-4GB11-0AB0+TM-E15C24-01		12.12.2019	willen	X
=0++A1+F23&EFS/73	Control voltage field 3		12.12.2019	willen	
=57++A1+F23&EFS/74	load circuit trough chain conveyor		12.12.2019	willen	
=113++A1+F23&EFS/75	activation feed screw roller mill		12.12.2019	willen	
=113++A1+F23&EFS/76	load circuit infeed screw roller mill		12.12.2019	willen	
=115++A1+F23&EFS/77	emergency stop roller mill		12.12.2019	willen	
=115.1++A1+F23&EFS/78	load circuit upper rollers roller mill		12.12.2019	willen	
=115.1++A1+F23&EFS/79	control circuit upper roll roller mill		12.12.2019	willen	
=115.2++A1+F23&EFS/80	load circuit lower rollers roller mill		12.12.2019	willen	
=115.2++A1+F23&EFS/81	control circuit lower roll roller mill		12.12.2019	willen	
=115.3++A1+F23&EFS/82	activation internal fedding roller mill		12.12.2019	willen	
=115.3++A1+F23&EFS/83	load circuit internal feeding roller mill		12.12.2019	willen	
=205++A1+F23&EFS/84	load circuit elevator		12.12.2019	willen	
=207++A1+F23&EFS/85	activation dosing screw		12.12.2019	willen	
=207.1++A1+F23&EFS/86	Dosing screw		12.12.2019	willen	
=207.2++A1+F23&EFS/87	Dosing screw		12.12.2019	willen	
=207.3++A1+F23&EFS/88	Dosing screw		12.12.2019	willen	
=210++A1+F23&EFS/89	activation filter		12.12.2019	willen	
=210.2++A1+F23&EFS/90	activation ventilator		12.12.2019	willen	
=211++A1+F23&EFS/91	activation screw		12.12.2019	willen	
=212++A1+F23&EFS/92	activation screw		12.12.2019	willen	
=213++A1+F23&EFS/93	activation feed screw roller mill		12.12.2019	willen	
=213++A1+F23&EFS/94	load circuit infeed screw roller mill		12.12.2019	willen	
=SPS_F3++A1+F23&EFA1/95	overview bus coupler and power module		12.12.2019	willen	
=SPS_F3++A1+F23&EFA1/96	overview inputs		12.12.2019	willen	
=SPS_F3++A1+F23&EFA1/97	overview inputs		12.12.2019	willen	
=SPS_F3++A1+F23&EFA1/98	Übersicht Analogeingänge		12.12.2019	willen	
=SPS_F3++A1+F23&EFA1/99	overview outputs		12.12.2019	willen	
=SPS_F3++A1+F23&EFA1/100	overview analog outputs		12.12.2019	willen	

Table of contents

Column X: An automatically generated page was edited

F06_001_EN

Page	Page description	supplementary page field	Date	Edited by	X
=SPS_F3++A1+F23&EFS/101	PLC power supply bus coupler		12.12.2019	willen	
=SPS_F3++A1+F23&EFS/102	PLC power supply power module		12.12.2019	willen	
=SPS_F3++A1+F23&ETC/103	PLC overview field 3		12.12.2019	willen	

Summarized parts list

F02_002_en_US

Order number	Quantity	Designation	Type number	Supplier
2702226	1	LED enclosure light	PLD E 608 W 315/F	PXC
277146	4	Contactor, 3p+1N/O, 11kW/400V/AC3	DILM25-10(RDC24)	ETN
046988	1	Motor-protective circuit-breaker, 3p, Ir=16-20A, screw connection	PKZM0-20	EATON
082882	11	Standard auxiliary contact, 1N/O+1N/C, flush mounting, screw connection	NHI-E-11-PKZ0	EATON
101451	6	Busbar adapter, 45mm, 25A, 1TS	BBA0-25	ETN
239349	3	Wiring module, for DILM17-M32	PKZM0-XM32DE	ETN
4970886	2	LS- Schalter C16 / 3-pol	DLS 6I C16-3	Doepke
101457	6	Busbar adapter, 55mm, 63A, 1TS	BBA4-63	ETN
234804	2	Inverter, degree of protection IP 20	FR-E740-060SC-EC	MITSUBISHI
2903370	8	????	RIF-0-RPT-24DC/21	PHOENIX
312355	2	EMC filter	FFR-MSH-095-16A-SF1	MIT
T221761	6	MS220K, PTC-resistor trip device, AC/DC24V	MS220K	ZIEHL
277274	4	Contactor, 3p+1N/O, 15kW/400V/AC3	DILM32-10(RDC24)	ETN
276421	6	Auxiliary contact module, 1NO+1N/C, surface mounting, screw connection	DILA-XHI11	ETN
283131	2	Secondary terminal wire kit, star-delta, for DILM17-32	DILM32-XSL	ETN
83.82.0.240.0000	2	Modular timer, Star-delta (SD) - AC (50/60 Hz)/DC - 24...240 V	83.82.0.240.0000	FINDER
222394	2	Motor-protective circuit-breaker, 3p, Ir=50-58A, screw connection	PKZM4-58	EATON
3804650155	2	Current transformer	TABB10C100	IME
VW3SKFN007UA2	1	Funkentstörfilter, 7A	VW3SKFN007UA2	SCHNEIDER
072739	1	Motor-protective circuit-breaker, 3p, Ir=6.3-10A, screw connection	PKZM0-10	EATON
	1	Altivar 312	ATV312H075N4	SCHNEIDER
277018	1	Contactor, 3p+1N/O, 7.5kW/400V/AC3	DILM17-10(RDC24)	ETN
046938	1	Motor-protective circuit-breaker, 3p, Ir=10-16A, screw connection	PKZM0-16	EATON
234807	1	Inverter, degree of protection IP 20	FR-E740-170SC-EC	MIT
215005	1	EMC filter	FFR-MSH-170-30A-RF1	MIT
4970889	1	LS- Schalter C25	DLS 6I C25-3	Doepke
276565	5	Contactor, 3p+1N/O, 3kW/400V/AC3	DILM7-10(24VDC)	ETN
072737	4	Motor-protective circuit-breaker, 3p, Ir=2.5-4A, screw connection	PKZM0-4	EATON

Summarized parts list

F02_002_en_US

Order number	Quantity	Designation	Type number	Supplier
283149	5	Kit, +component adapter, for DOL starter for DILM7-M15	PKZM0-XDM12	ETN
4970762	1	LS-Schalter B6A / 1pol	DLS6HB6-16KA	DOEPKE
2903334	1	relay module 24DC/2X21	RIF-1-RPT-LDP-24DC/2X21	PHOENIX
	0			
KFD2-SR2-Ex1.W	1	????	KFD2-SR2-Ex1.W	P+F
046989	1	Motor-protective circuit-breaker, 3p, Ir=20-25A, screw connection	PKZM0-25	EATON
072738	1	Motor-protective circuit-breaker, 3p, Ir=4-6.3A, screw connection	PKZM0-6,3	EATON
6ES7132-4BF00-0AA0 / 6ES7193-4CB30-0AA0	2	8DO, 24V DC, 0.5A / TM-E15C24-01	6ES7132-4BF00-0AA0 / 6ES7193-4CB30-0AA0	SIE
6ES7131-4BF00-0AA0 / 6ES7193-4CB30-0AA0	4	8DI, 24V DC / TM-E15C24-01	6ES7131-4BF00-0AA0 / 6ES7193-4CB30-0AA0	SIE
6ES7151-1AA06-0AB0	1	ET200S, IM151-1 STD, 12MBIT/S	6ES7151-1AA06-0AB0	SIE
6ES7138-4CA01-0AA0 / 6ES7193-4CD30-0AA0	2	PM-E, DC 24V / TM-P15C23-A0	6ES7138-4CA01-0AA0 / 6ES7193-4CD30-0AA0	SIE
6ES7135-4FB01-0AB0 / 6ES7193-4CB30-0AA0	2	2AO U, +/-10V, 1-5V, 13BIT / TM-E15C24-01	6ES7135-4FB01-0AB0 / 6ES7193-4CB30-0AA0	SIE
6ES7134-4GB11-0AB0 / 6ES7193-4CB30-0AA0	1	2AI STD I-4DMU, 4-20MA / TM-E15C24-01	6ES7134-4GB11-0AB0 / 6ES7193-4CB30-0AA0	SIE

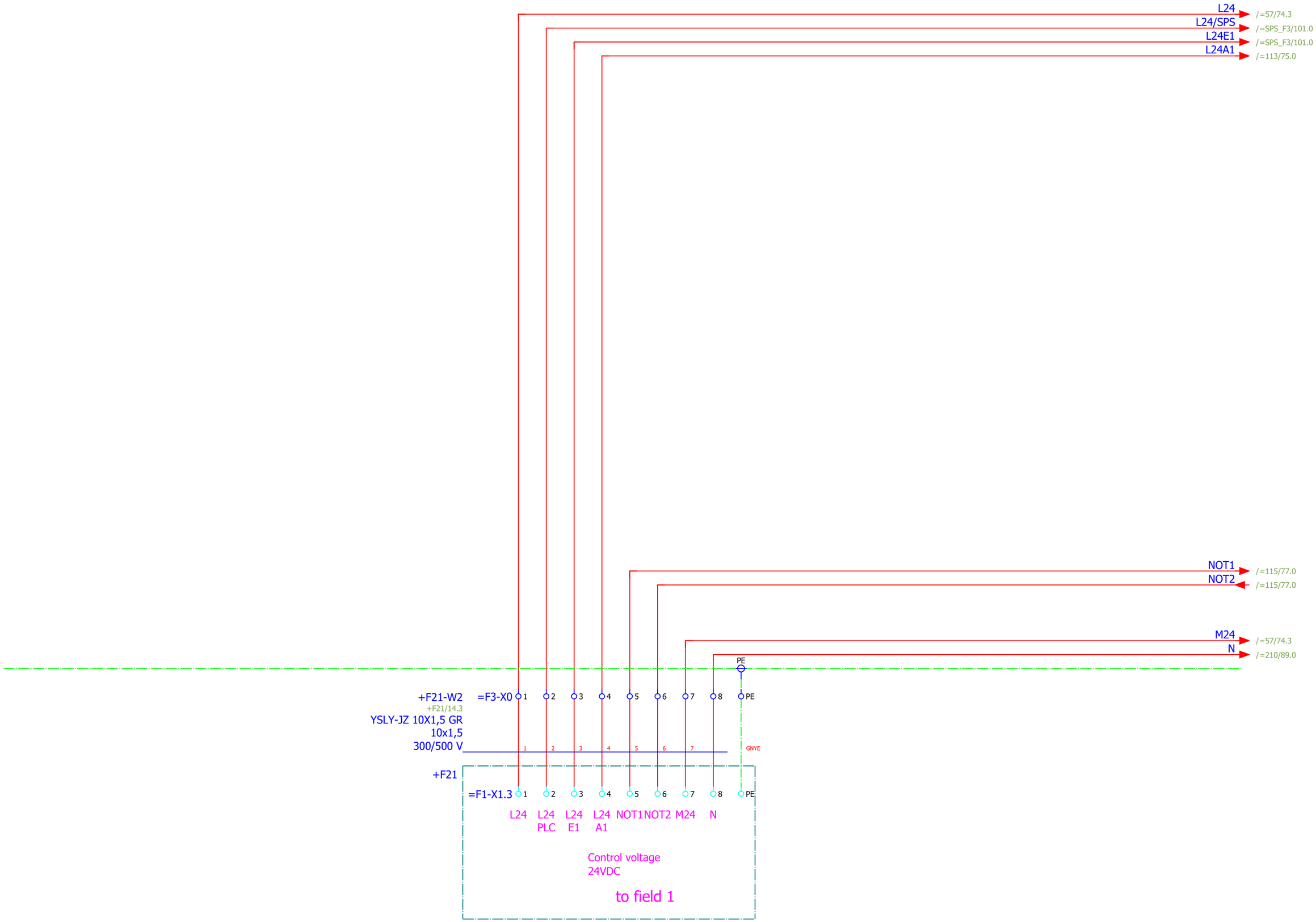
L24
/=57/74.3
L24/SPS
/=SPS_F3/101.0
L24E1
/=SPS_F3/101.0
L24A1
/=113/75.0
NOT1
/=115/77.0
NOT2
/=115/77.0
M24
/=57/74.3
N
/=210/89.0
PE
+F21-W2
=F3-X0
+F21/14.3
YSLY-JZ 10X1,5 GR
10x1,5
300/500 V
GNYE
+F21
=F1-X1.3
L24
L24 PLC
L24 E1
L24 A1
NOT1
NOT2
M24
N
Control voltage
24VDC
to field 1

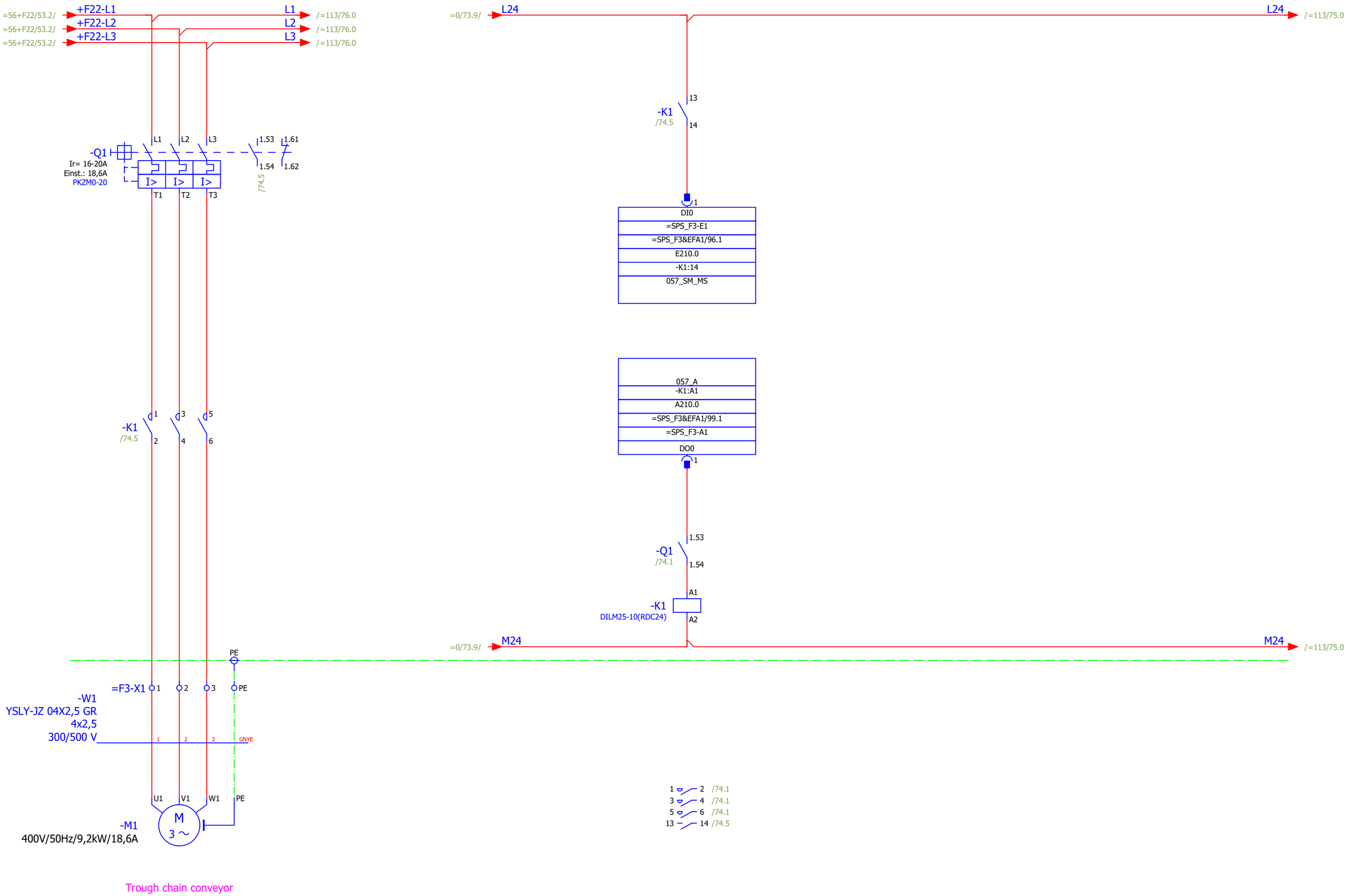
=56+F22/53.2/
+F22-L1
+F22-L2
+F22-L3
L1
L2
L3
/=113/76.0
=0/73.9/
L24
/=113/75.0
-K1
/74.5
13
14
1
DI0
=SPS_F3-E1
=SPS_F3&EFA1/96.1
E210.0
-K1:14
057_SM_MS
-Q1
Ir= 16-20A
Einst.: 18,6A
PKZM0-20
1.53
1.61
1.54
1.62
I>
T1
T2
T3
057_A
-K1:A1
A210.0
=SPS_F3&EFA1/99.1
=SPS_F3-A1
DO0
-Q1
/74.1
A1
A2
DILM25-10(RDC24)
M24
PE
=F3-X1
-W1
YSLY-JZ 04X2,5 GR
4x2,5
300/500 V
GNYE
U1
V1
W1
-M1
400V/50Hz/9,2kW/18,6A
M
3 ~
Trough chain conveyor
/74.1
/74.5

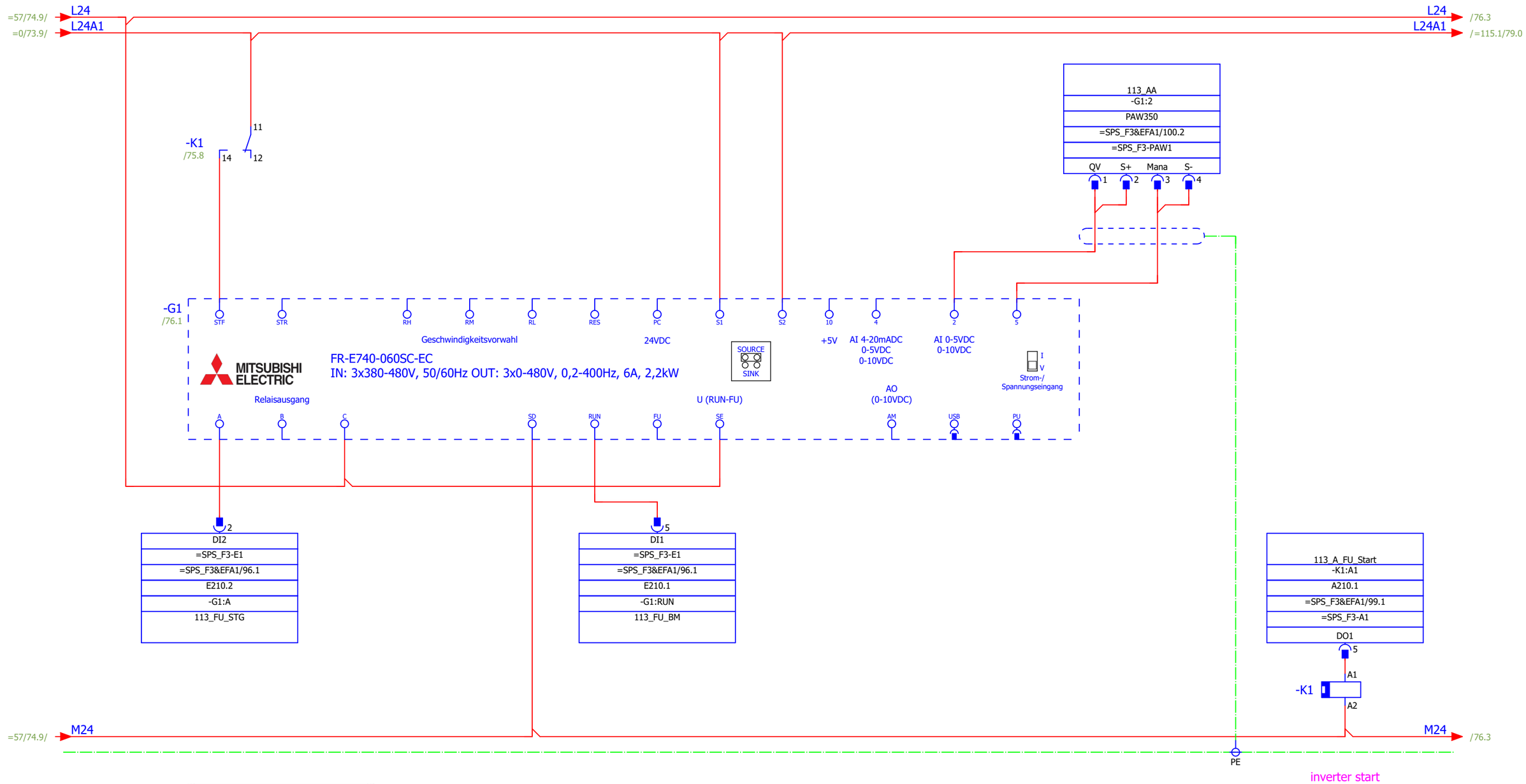

Parameter settings		
P1	=	50Hz
P7	=	5s
P8	=	5s
P73	=	0
P80	=	1,5kW
P125	=	50Hz
P192	=	99

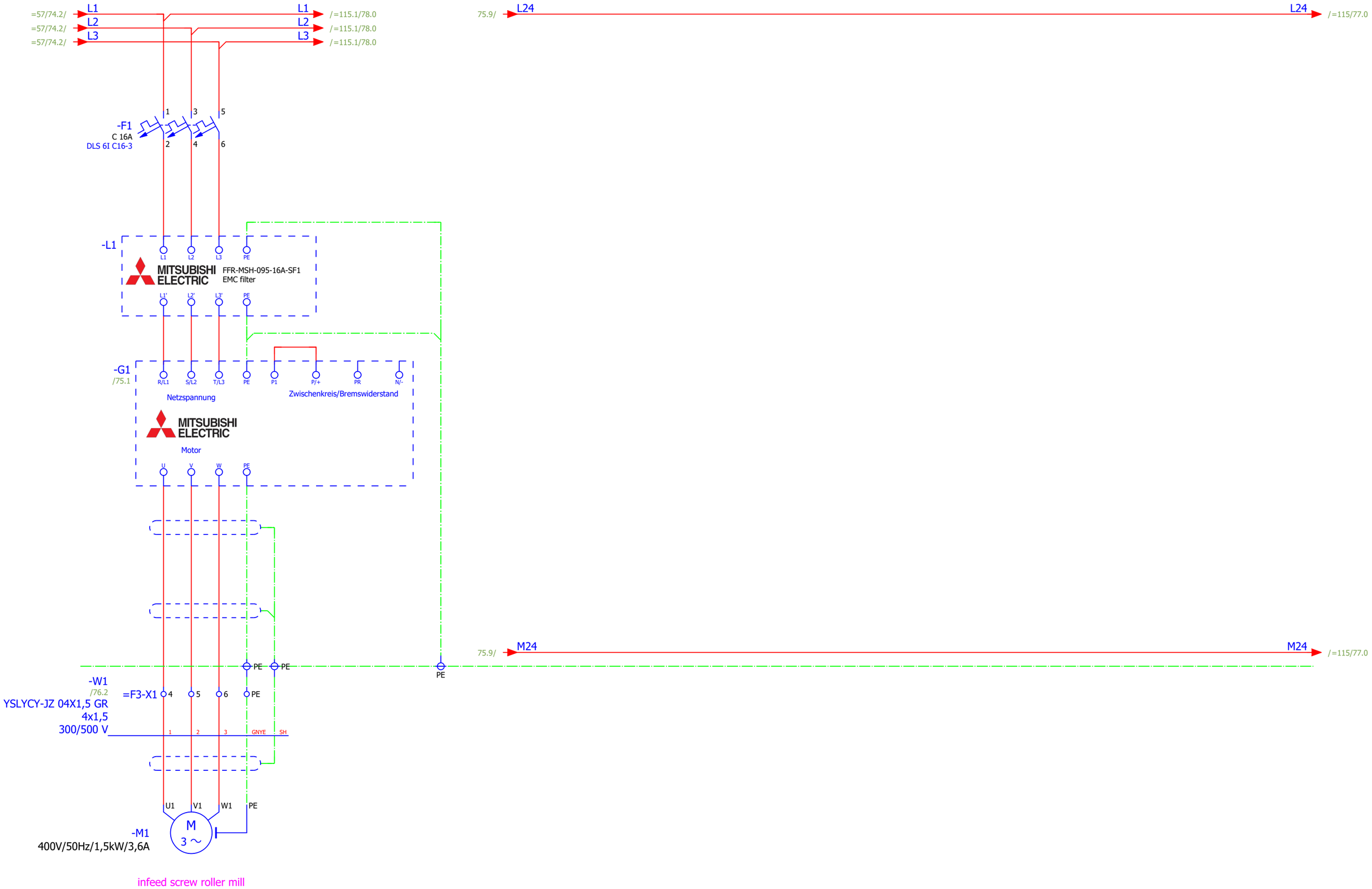
=57/74.2/ L1
=57/74.2/ L2
=57/74.2/ L3
L1 /=115.1/78.0
L2 /=115.1/78.0
L3 /=115.1/78.0
75.9/ L24
L24 /=115/77.0
-F1
C 16A
DLS 6I C16-3
1 3 5
2 4 6
-L1
L1 L2 L3 PE
MITSUBISHI ELECTRIC
FFR-MSH-095-16A-SF1
EMC filter
L1' L2' L3' PE
-G1
/75.1
R/L1 S/L2 T/L3 PE P1 P/+ PR N/-
Netzspannung
Zwischenkreis/Bremswiderstand
MITSUBISHI ELECTRIC
Motor
U V W PE
75.9/ M24
M24 /=115/77.0
PE PE
PE
-W1
/76.2
YSLYCY-JZ 04X1,5 GR
4x1,5
300/500 V
=F3-X1 4 5 6 PE
1 2 3 GNYE SH
U1 V1 W1 PE
M
3 ~
-M1
400V/50Hz/1,5kW/3,6A
infeed screw roller mill

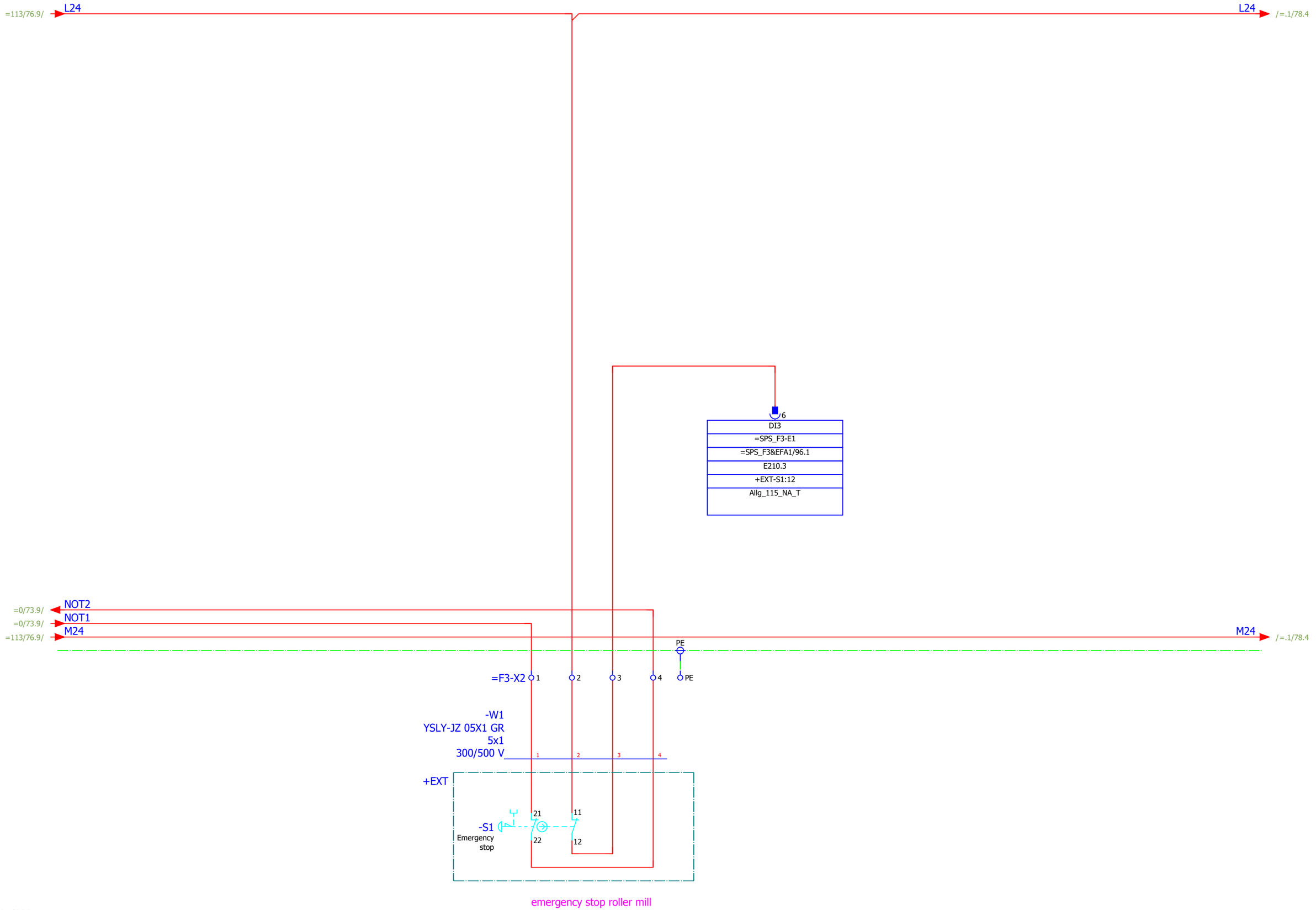

=114.2+F27/320

=.1/78

			Date	12.12.2019	Mixed feed plant Golden Poultry	BEYTEC ... your gateway to success	emergency stop roller mill	= 115	
			Ed.	willen				+ F23	
			Appr		Field 3			1 : 1 / Part II	Page 77
Modification	Date	Name	Original	V:\EPLAN\Projekte\Company\Alsad\Beytec\2018\Feed Mill Alssad.elk	Replaced by				Page 605

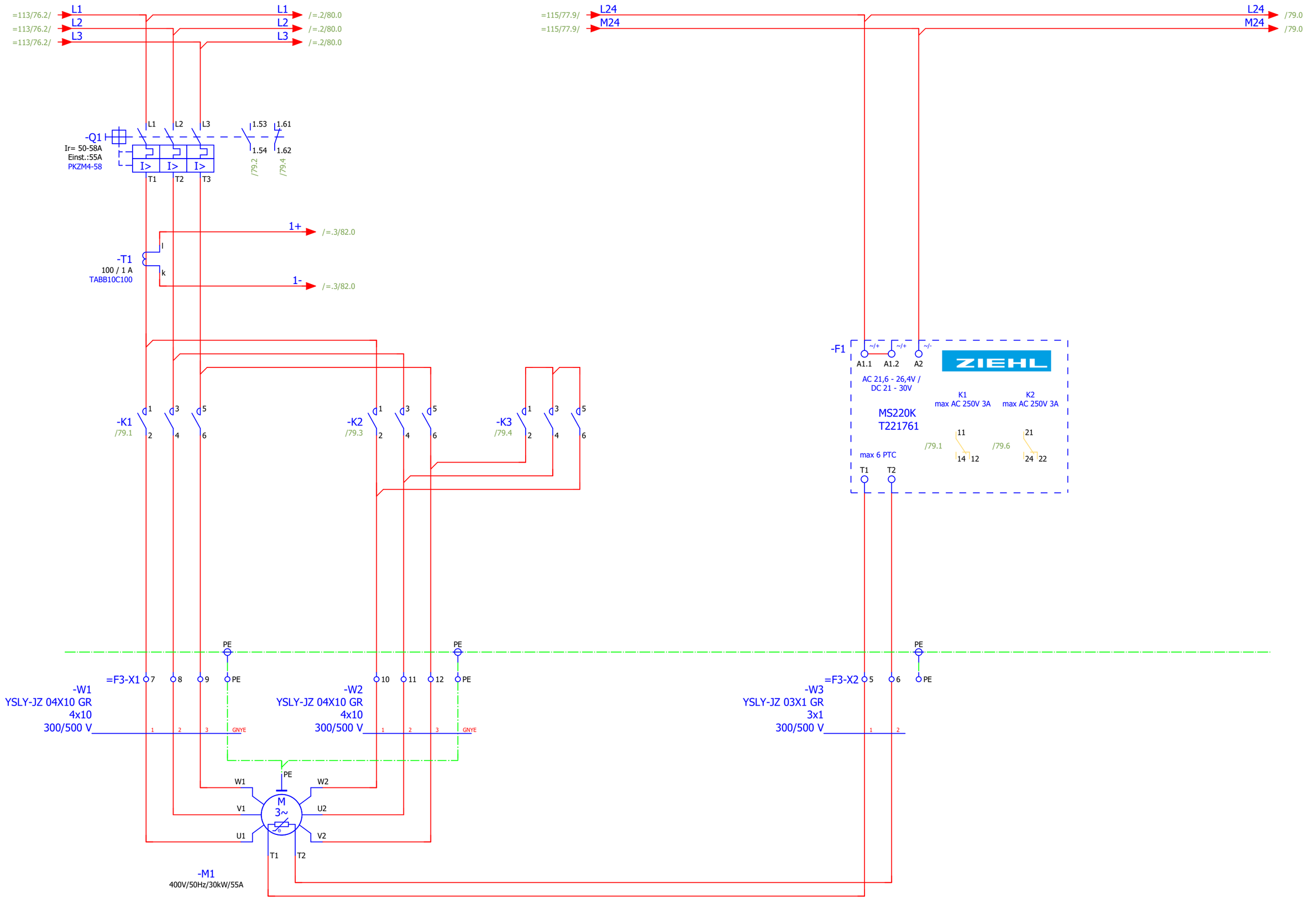
=113/76.2/ L1
=113/76.2/ L2
=113/76.2/ L3
L1 /=.2/80.0
L2 /=.2/80.0
L3 /=.2/80.0
=115/77.9/ L24
=115/77.9/ M24
L24 /79.0
M24 /79.0
-Q1
Ir= 50-58A
Einst.:55A
PKZM4-58
1.53
1.54
1.61
1.62
/79.2
/79.4
1+ /=.3/82.0
1- /=.3/82.0
-T1
100 / 1 A
TABB10C100
-K1
/79.1
-K2
/79.3
-K3
/79.4
-F1
A1.1
A1.2
A2
AC 21,6 - 26,4V /
DC 21 - 30V
ZIEHL
MS220K
T221761
K1
max AC 250V 3A
K2
max AC 250V 3A
/79.1
/79.6
max 6 PTC
T1
T2
PE
=F3-X1
-W1
YSLY-JZ 04X10 GR
4x10
300/500 V
-W2
YSLY-JZ 04X10 GR
4x10
300/500 V
=F3-X2
-W3
YSLY-JZ 03X1 GR
3x1
300/500 V
GNYE
W1
V1
U1
W2
U2
V2
M
3~
-M1
400V/50Hz/30kW/55A

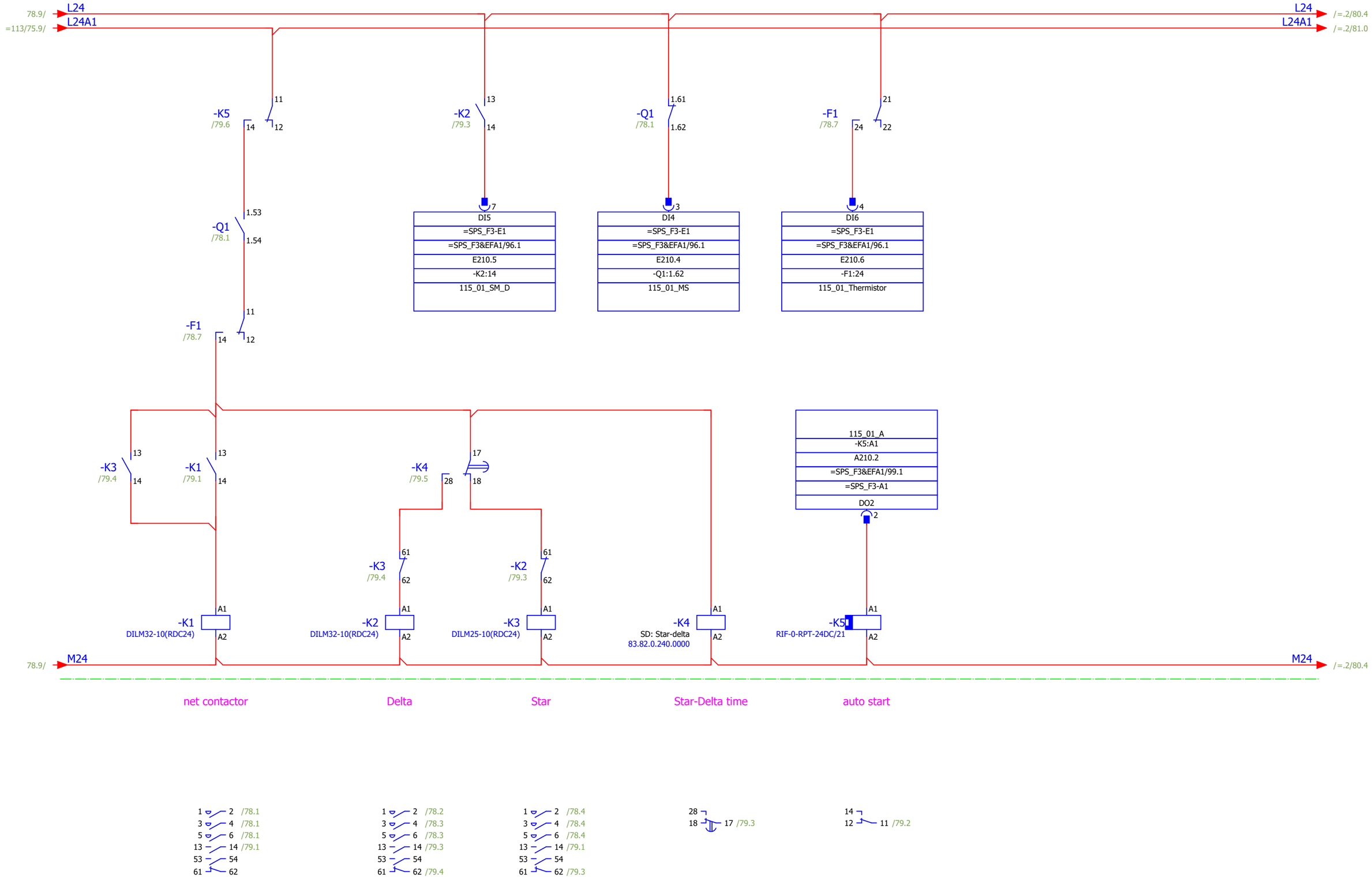

			Date	12.12.2019	Mixed feed plant Golden Poultry	BEYTEC	control circuit upper roll roller mill		= 115.1
			Ed.	willen		... your gateway to success			+ F23
			Appr		Field 3			1 : 1	Part II
Modification	Date	Name	Original	V:\EPLAN\Projekte\Company\Beytec\2018\Feed Mill Alssad.elk	Replaced by				Page 79 / Page 605

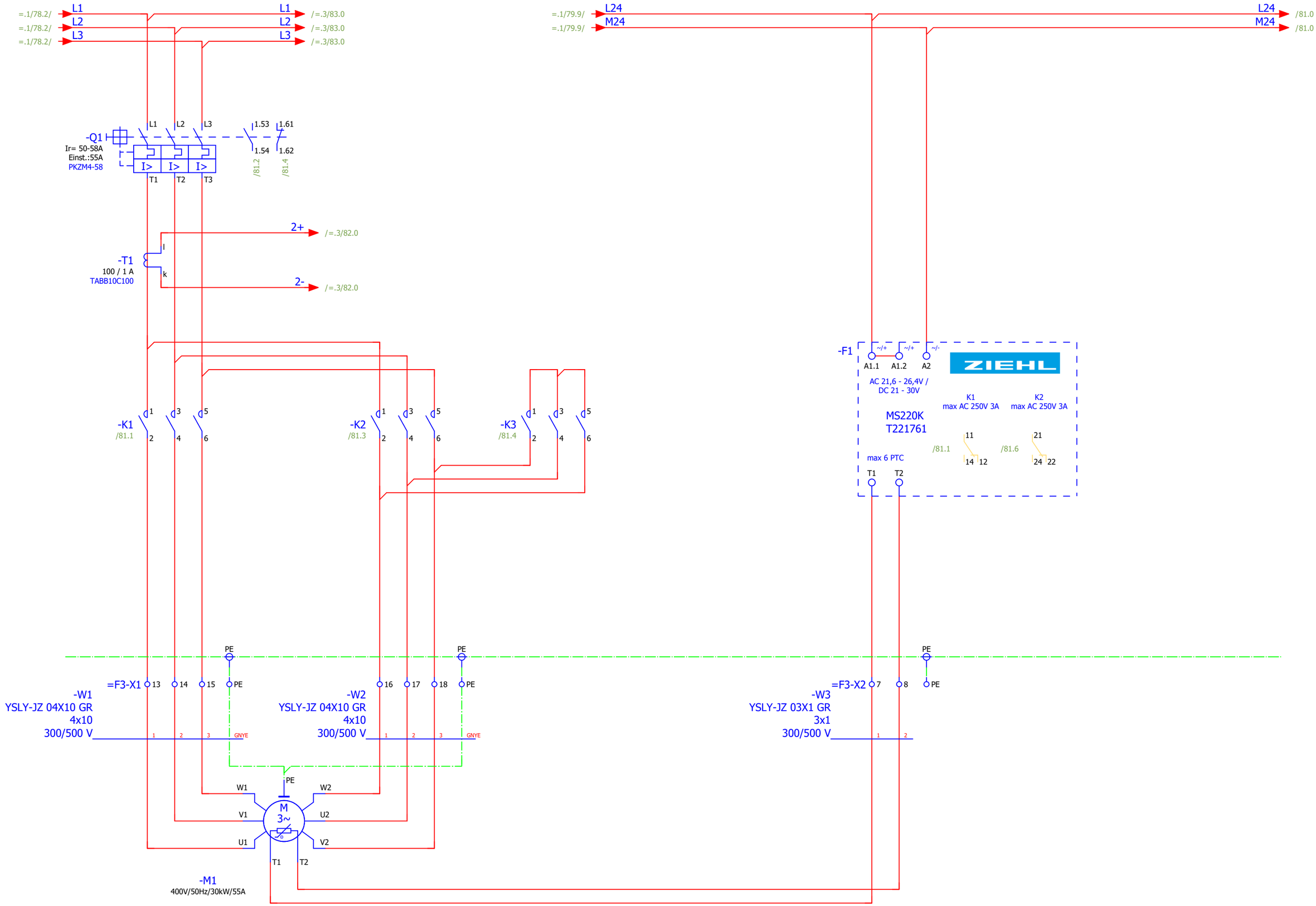

			Date	12.12.2019	Mixed feed plant Golden Poultry	BEYTEC ... your gateway to success	load circuit lower rollers roller mill	= 115.2	
			Ed.	willen				+ F23	
			Appr		Field 3			1 : 1 Part II	Page 80
Modification	Date	Name	Original	V:\EPLAN\Projekte\Company\Replace\Beytec\2018\Feed Mill Alssad.elk	Replaced by				Page 605

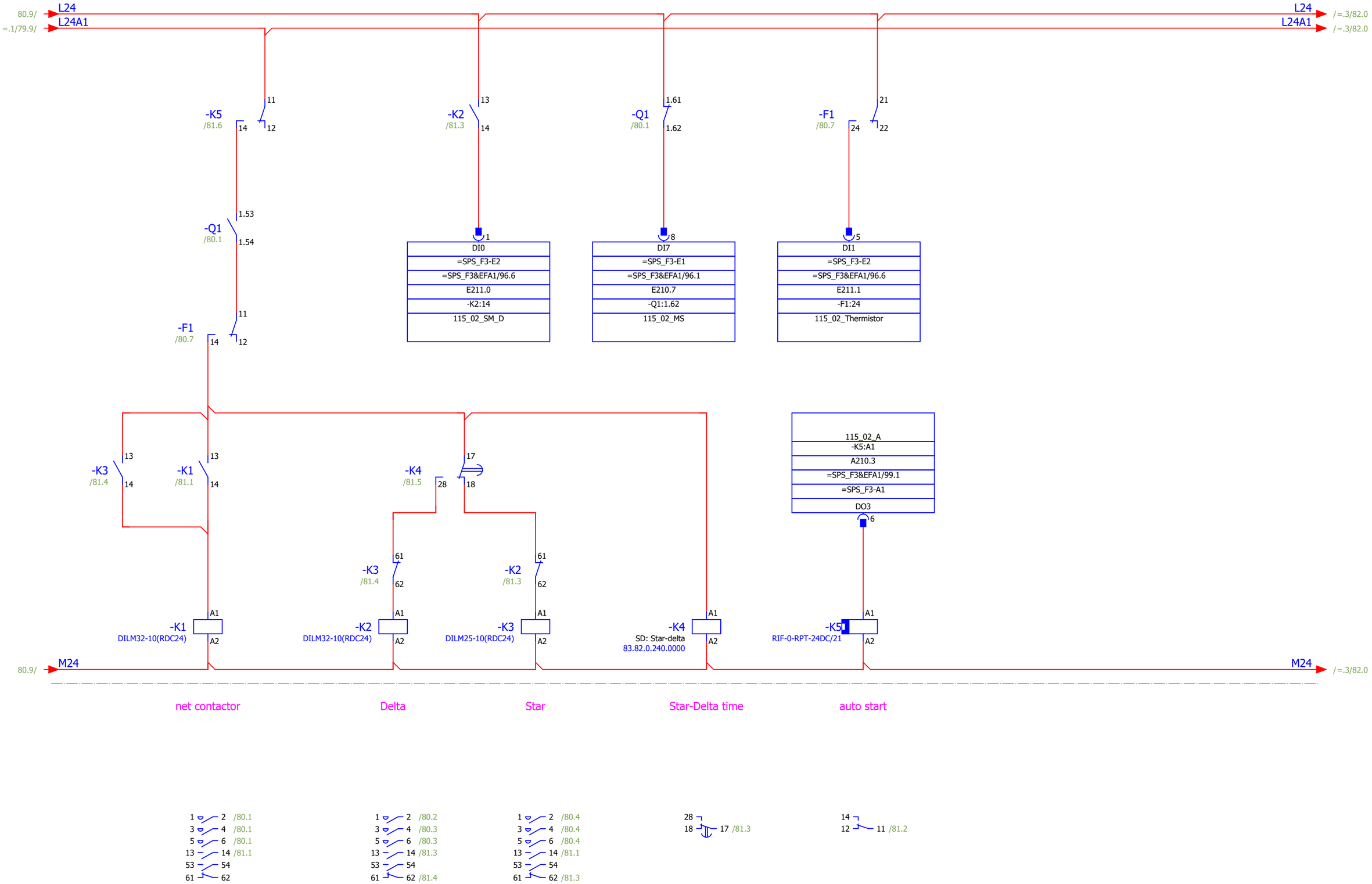

			Date	12.12.2019	Mixed feed plant Golden Poultry	BEYTEC ... your gateway to success	control circuit lower roll roller mill		= 115.2
			Ed.	willen					+ F23
			Appr		Field 3			1 : 1 / Part II	Page 81
Modification	Date	Name	Original	V:\EPLAN\Projekte\Company\Beytec\2018\Feed Mill Alssad.elk	Replaced by				Page 605

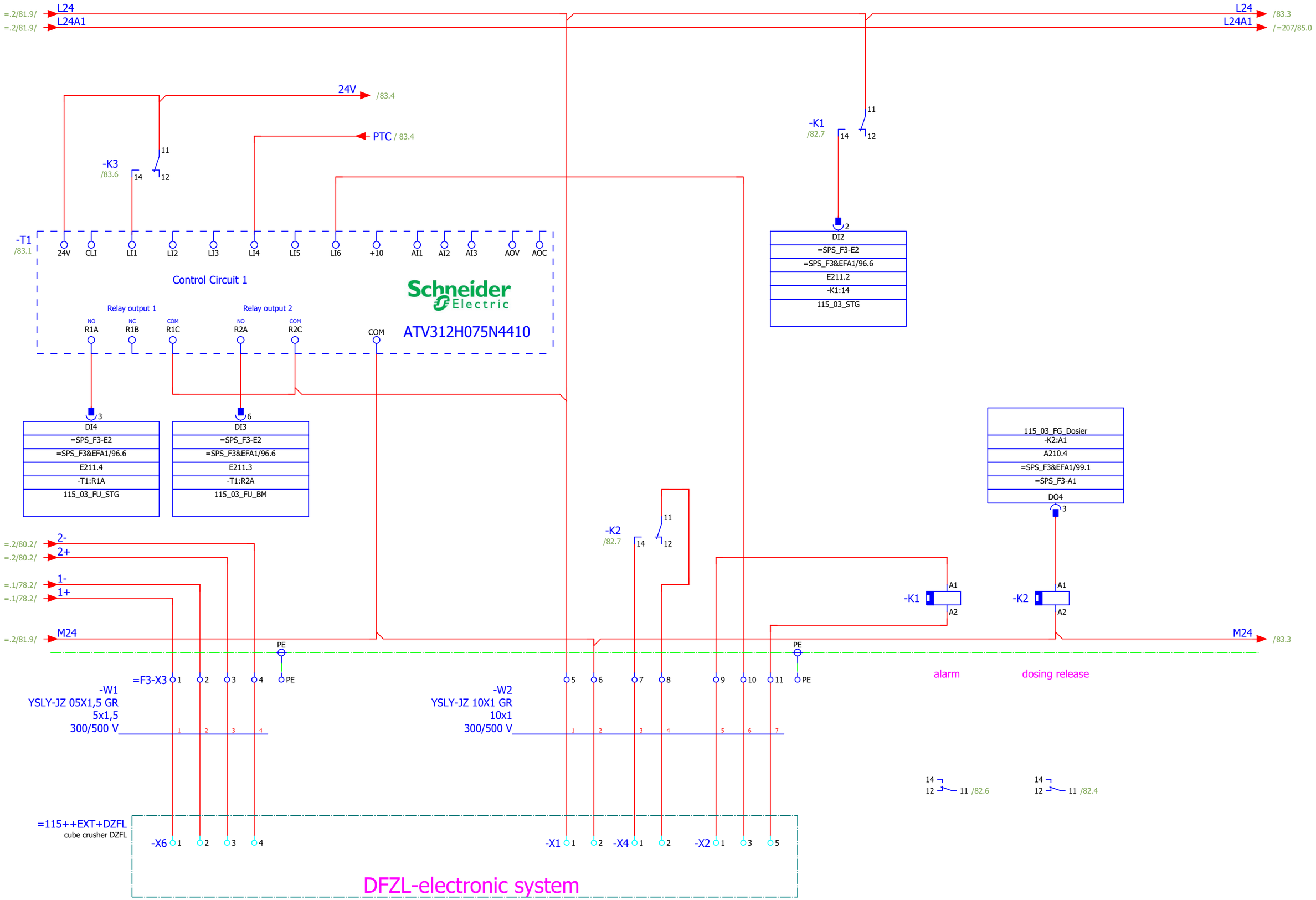
=.2/81.9/ L24
=.2/81.9/ L24A1
L24 /83.3
L24A1 /=207/85.0
24V /83.4
PTC / 83.4
-K3 /83.6
-K1 /82.7
-T1 /83.1
24V CLI LI1 LI2 LI3 LI4 LI5 LI6 +10 AI1 AI2 AI3 AOV AOC
Control Circuit 1
Relay output 1
Relay output 2
NO NC COM NO COM
R1A R1B R1C R2A R2C COM
Schneider Electric
ATV312H075N4410
DI2
=SPS_F3-E2
=SPS_F3&EFA1/96.6
E211.2
-K1:14
115_03_STG
DI4
=SPS_F3-E2
=SPS_F3&EFA1/96.6
E211.4
-T1:R1A
115_03_FU_STG
DI3
=SPS_F3-E2
=SPS_F3&EFA1/96.6
E211.3
-T1:R2A
115_03_FU_BM
115_03_FG_Dosier
-K2:A1
A210.4
=SPS_F3&EFA1/99.1
=SPS_F3-A1
DO4
-K2 /82.7
=.2/80.2/ 2-
=.2/80.2/ 2+
=.1/78.2/ 1-
=.1/78.2/ 1+
=.2/81.9/ M24
M24 /83.3
PE
=F3-X3
-W1
YSLY-JZ 05X1,5 GR
5x1,5
300/500 V
-W2
YSLY-JZ 10X1 GR
10x1
300/500 V
alarm
dosing release
/82.6
/82.4
=115++EXT+DZFL
cube crusher DZFL
-X6 -X1 -X4 -X2
DFZL-electronic system

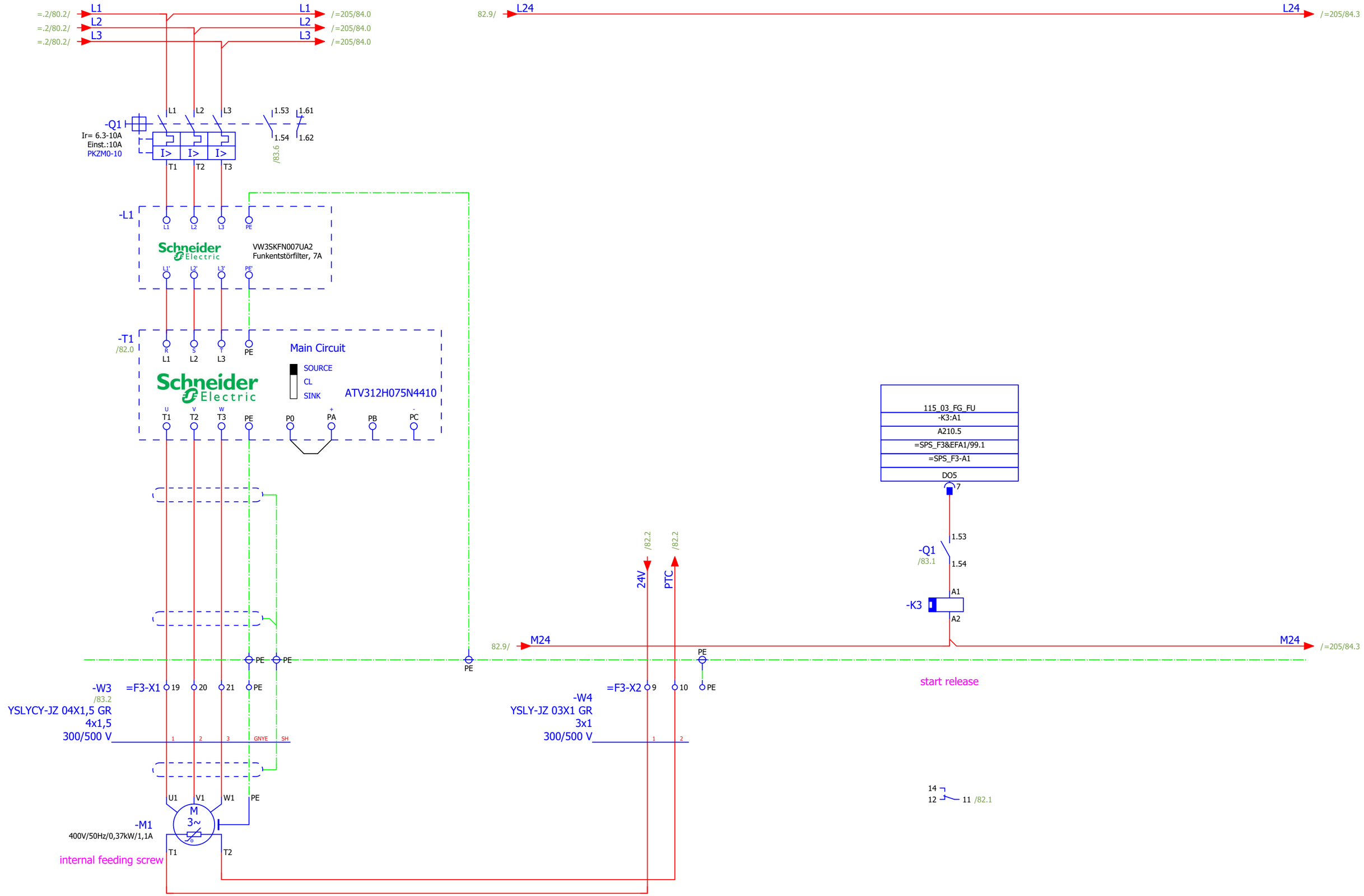

82

=205/84

			Date	12.12.2019	Mixed feed plant Golden Poultry	BEYTEC ... your gateway to success	load circuit internal feeding roller mill	= 115.3	
			Ed.	willen				+ F23	
			Appr		Field 3			1 : 1 Part II	Page 83
Modification	Date	Name	Original	V:\EPLAN\Projekte\Company\Beytec\2018\Feed Mill Alssad.elk	Replaced by				Page 605

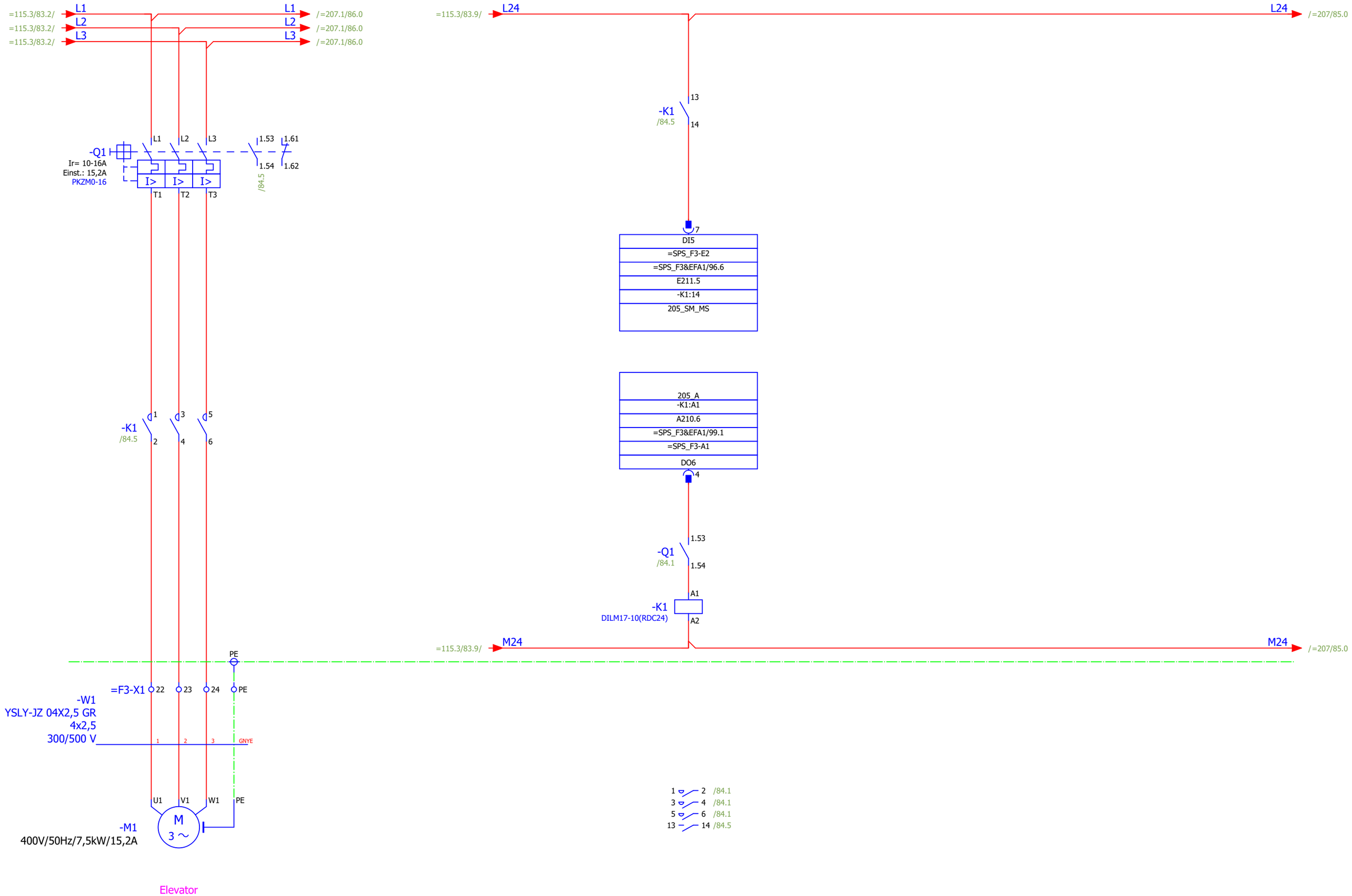

=115.3/83 +F27/321

			Date	12.12.2019	Mixed feed plant Golden Poultry	BEYTEC ... your gateway to success	load circuit elevator	= 205	
			Ed.	willen	Field 3			+ F23	
			Appr				1 : 1	Part II	Page 84
Modification	Date	Name	Original	V:\EPLAN\Projekte\Company\Alsad\Beytec\2018\Feed Mill Alssad.elk	Replaced by				Page 605

Replaced by

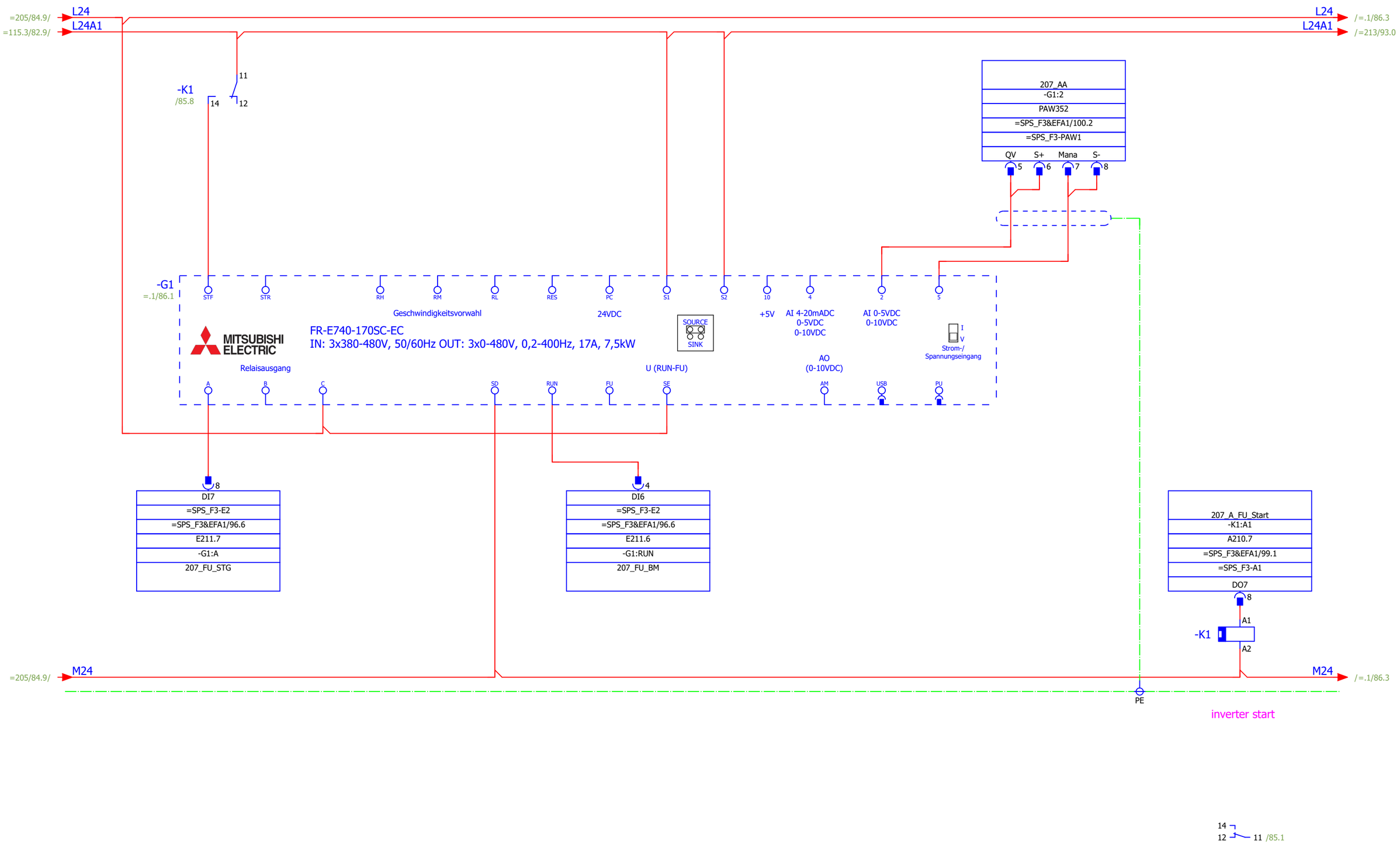

=206.2.2+F27/326

=.1/86

			Date	12.12.2019	Mixed feed plant Golden Poultry	BEYTEC	activation dosing screw		= 207	
			Ed.	willen					+ F23	
			Appr		Field 3	... your gateway to success		1 : 1	Part II	Page 85
Modification	Date	Name	Original	V:\EPLAN\Projekte\Company\Beytec\2018\Feed Mill Alssad.elk	Replaced by					Page 605

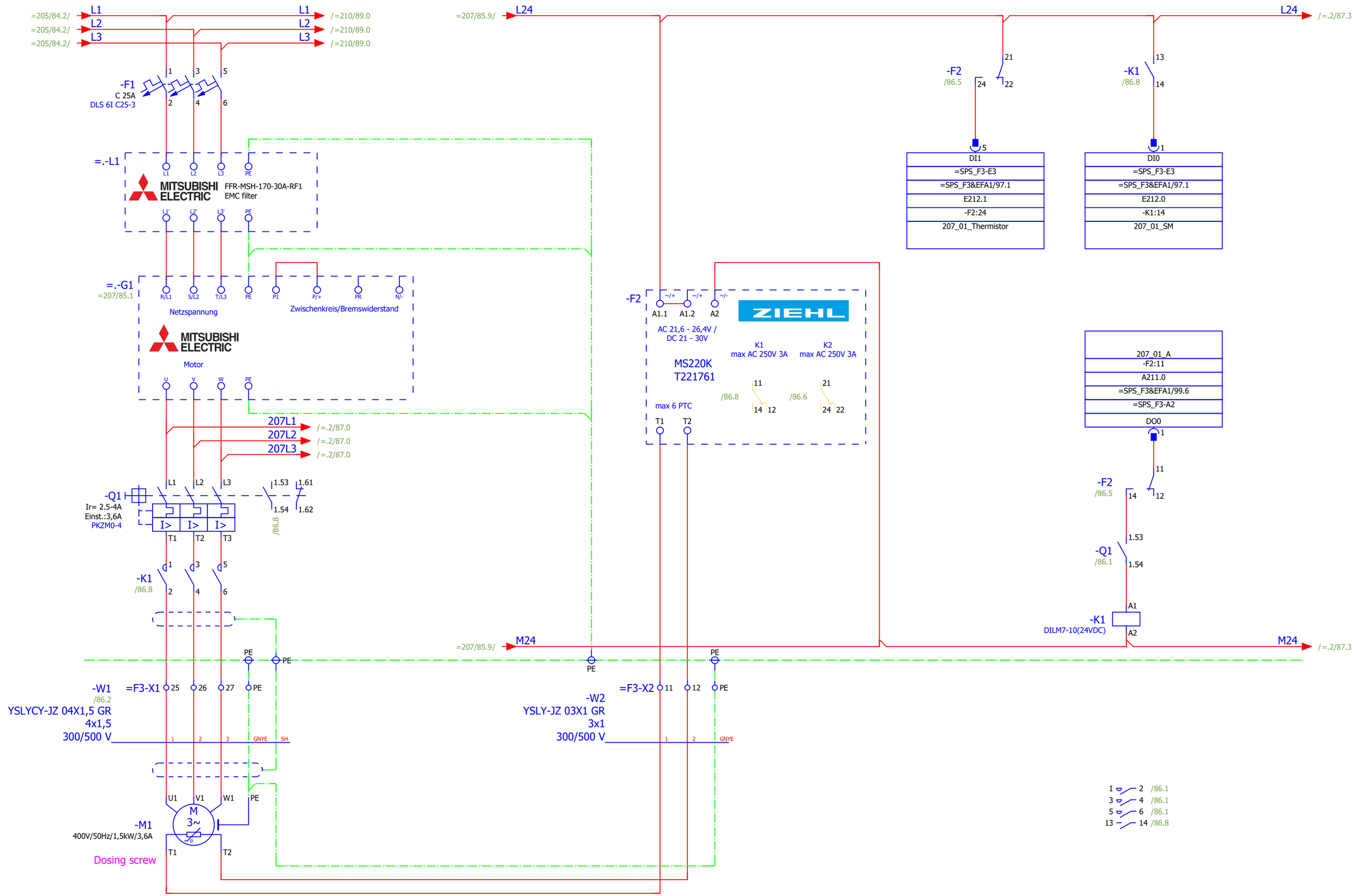

=207/85

=.2/87

			Date	12.12.2019	Mixed feed plant Golden Poultry	BEYTEC	Dosing screw			= 207.1	
			Ed.	willen						+ F23	
			Appr		Field 3	... your gateway to success		1 : 1	Part II	Page	86
Modification	Date	Name	Original	V:\EPLAN\Projekte\Company\Replace\Beytec\2018\Feed Mill Alssad.elk	Replaced by					Page	605

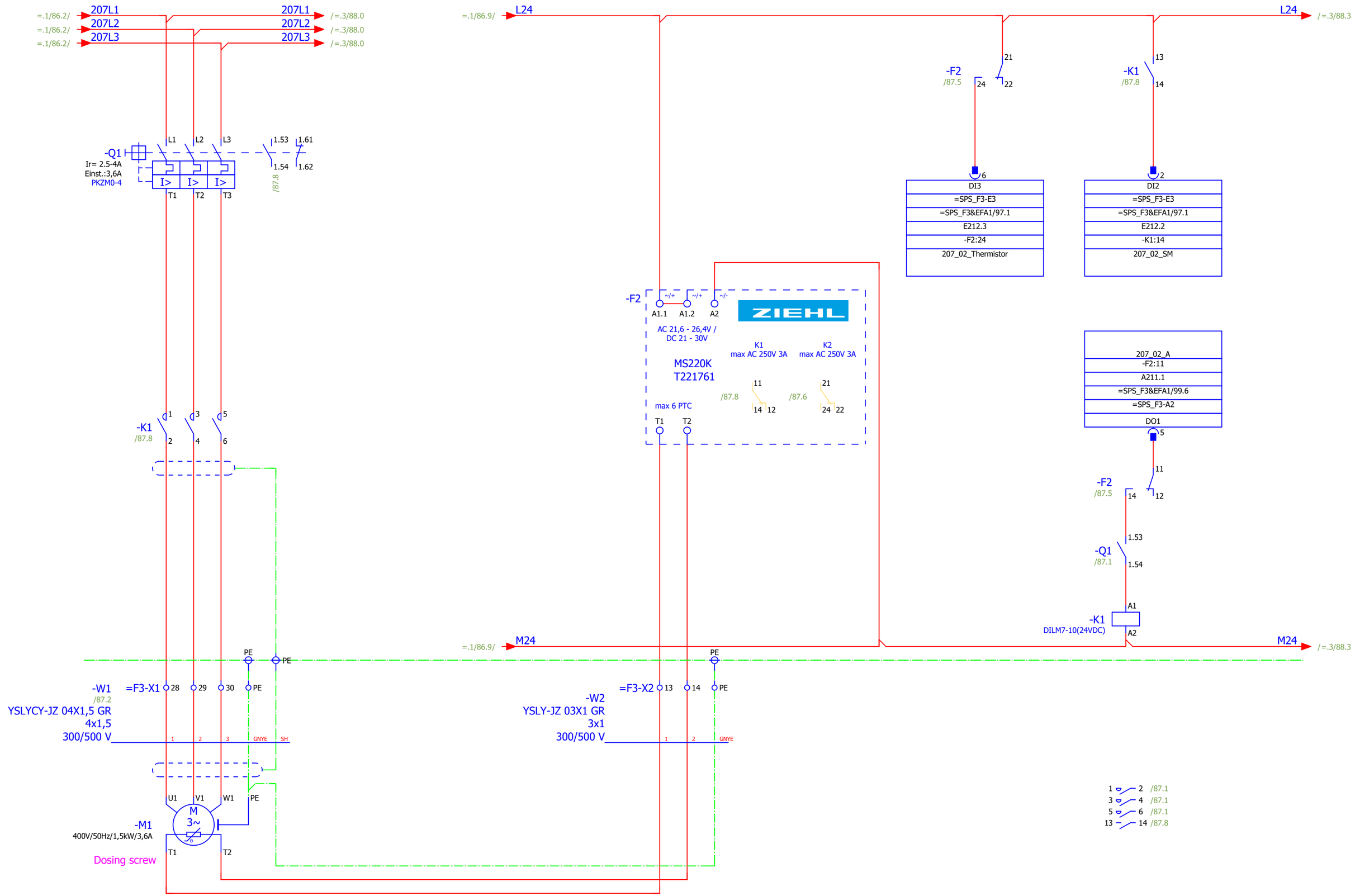

=.1/86

=.3/88

			Date	12.12.2019	Mixed feed plant Golden Poultry	BEYTEC	Dosing screw			= 207.2	
			Ed.	willen						+ F23	
			Appr		Field 3	... your gateway to success		1 : 1	Part II	Page 87	
Modification	Date	Name	Original	V:\EPLAN\Projekte\Company\Replace\Beytec\2018\Feed Mill Alssad.elk	Replaced by					Page 605	

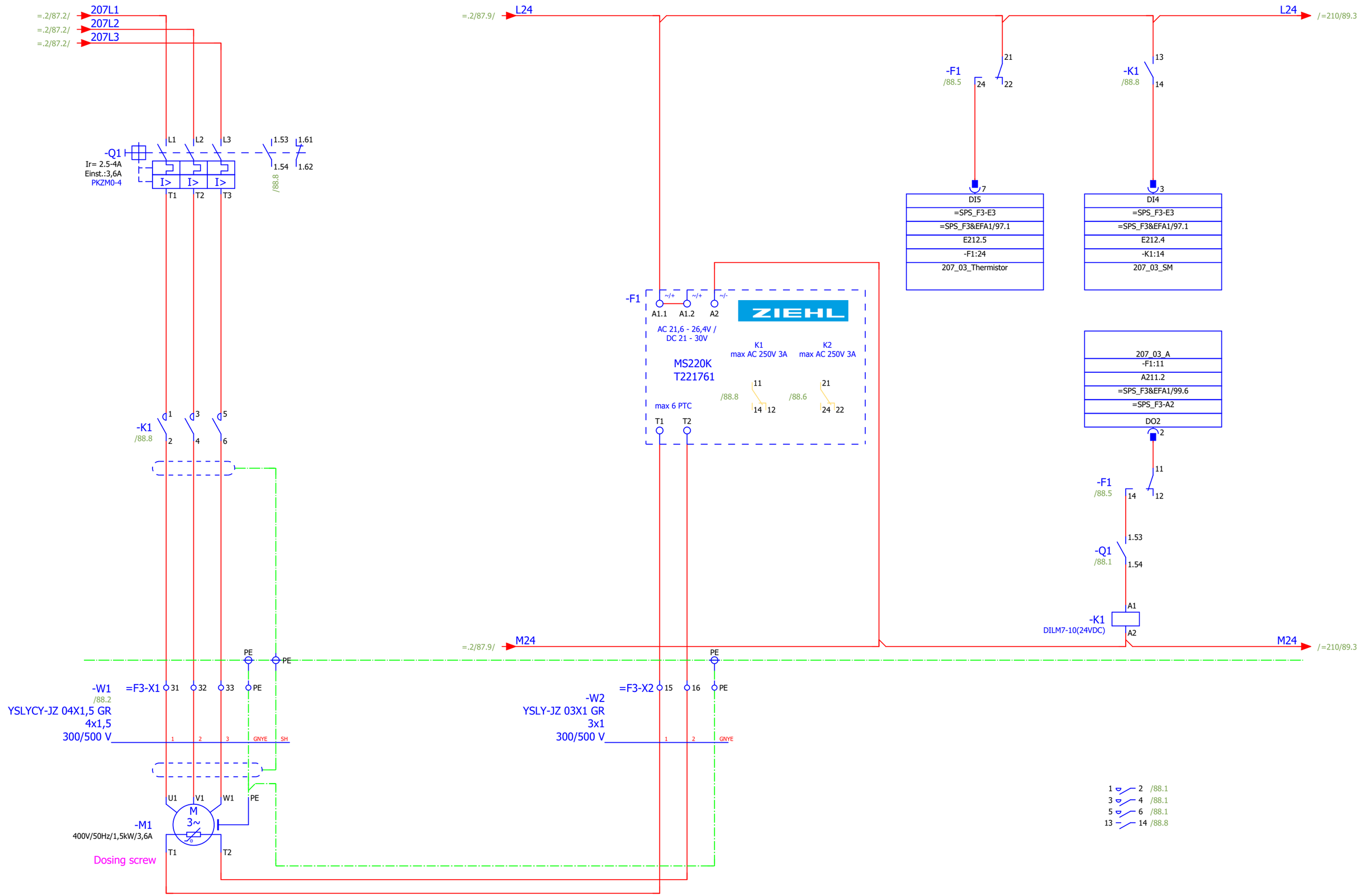

=.2/87

=209.1+F27/327

			Date	12.12.2019	Mixed feed plant Golden Poultry	BEYTEC	Dosing screw		= 207.3	
			Ed.	willen					+ F23	
			Appr		Field 3	... your gateway to success		1 : 1	Part II	Page 88
Modification	Date	Name	Original	V:\EPLAN\Projekte\Company\Replace\Beytec\2018\Feed Mill Alssad.elk	Replaced by					Page 605

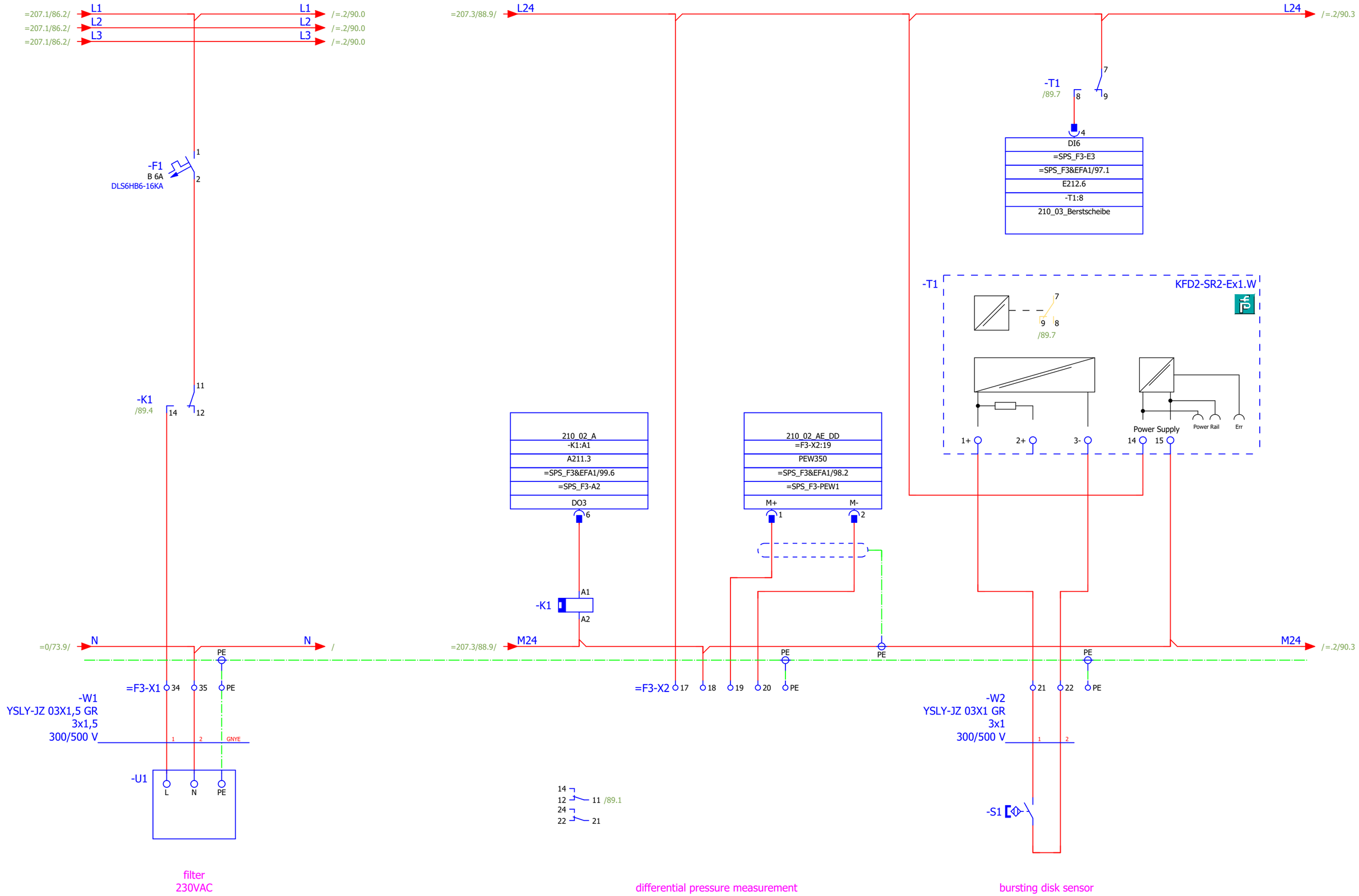

=209.2+F27/328

=.2/90

			Date	12.12.2019	Mixed feed plant Golden Poultry	BEYTEC ... your gateway to success	activation filter	= 210
			Ed.	willen				+ F23
			Appr		Field 3		1 : 1	Part II
Modification	Date	Name	Original	V:\EPLAN\Projekte\Company\Replace\Beytec\2018\Feed Mill Alssad.elk	Replaced by			Page 89 / Page 605

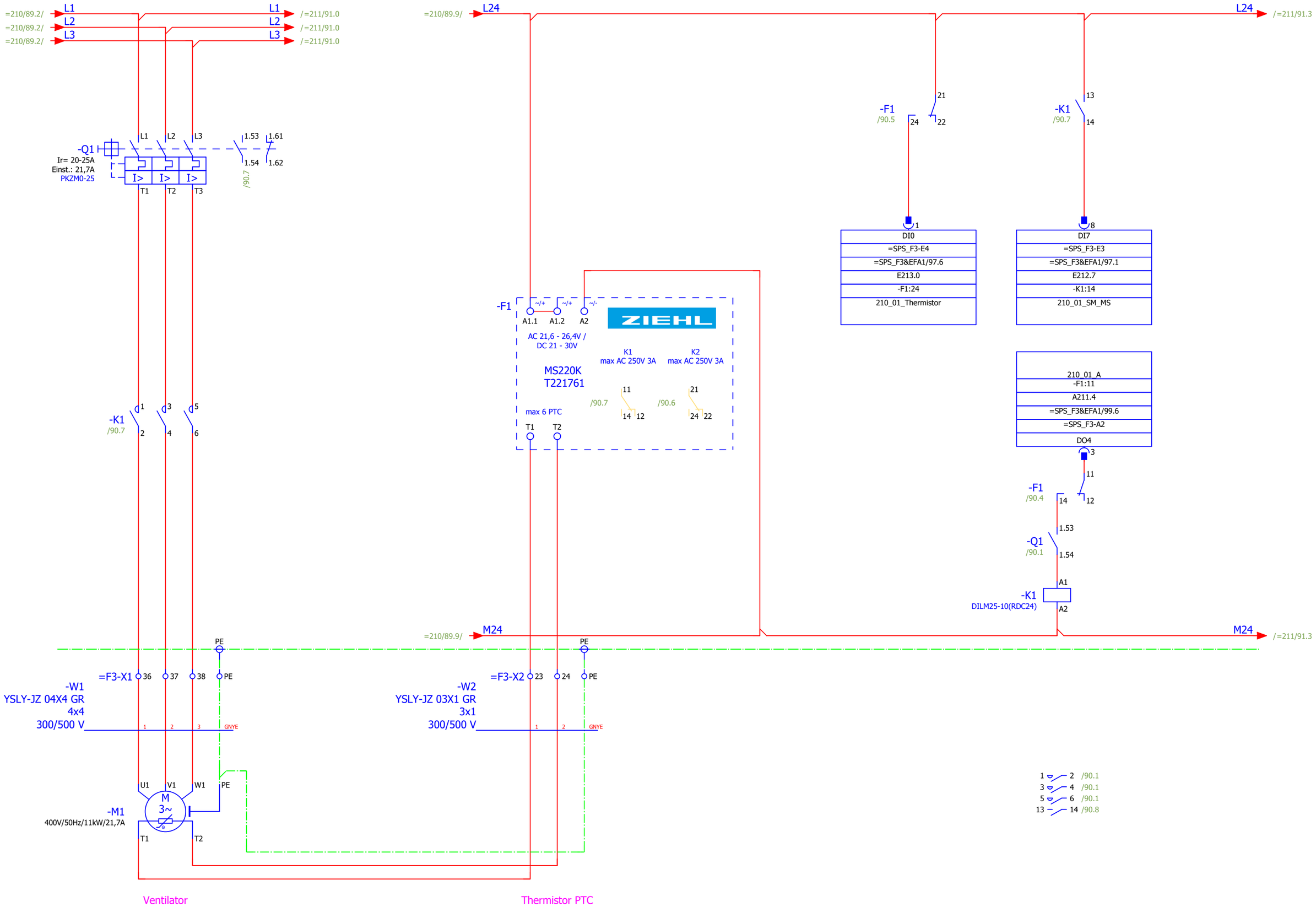
=210/89.2/ L1
=210/89.2/ L2
=210/89.2/ L3
L1 /=211/91.0
L2 /=211/91.0
L3 /=211/91.0
=210/89.9/ L24
L24 /=211/91.3
-Q1
Ir= 20-25A
Einst.: 21,7A
PKZM0-25
I> I> I>
T1 T2 T3
L1 L2 L3
1.53 1.61
1.54 1.62
/90.7
-K1
/90.7
1 3 5
2 4 6
-F1
/90.5
21
24 22
-K1
/90.7
13
14
1
DI0
=SPS_F3-E4
=SPS_F3&EFA1/97.6
E213.0
-F1:24
210_01_Thermistor
8
DI7
=SPS_F3-E3
=SPS_F3&EFA1/97.1
E212.7
-K1:14
210_01_SM_MS
-F1
~/+ ~/+ ~/-
A1.1 A1.2 A2
ZIEHL
AC 21,6 - 26,4V /
DC 21 - 30V
K1
max AC 250V 3A
K2
max AC 250V 3A
MS220K
T221761
11
14 12
/90.7
21
24 22
/90.6
max 6 PTC
T1 T2
210_01_A
-F1:11
A211.4
=SPS_F3&EFA1/99.6
=SPS_F3-A2
DO4
3
11
12
-F1
/90.4
14
1.53
-Q1
/90.1
1.54
A1
-K1
DILM25-10(RDC24)
A2
=210/89.9/ M24
M24 /=211/91.3
PE
=F3-X1 36 37 38 PE
-W1
YSLY-JZ 04X4 GR
4x4
300/500 V
1 2 3 GNYE
PE
=F3-X2 23 24 PE
-W2
YSLY-JZ 03X1 GR
3x1
300/500 V
1 2 GNYE
U1 V1 W1 PE
M
3~
-M1
400V/50Hz/11kW/21,7A
T1 T2
1 2 /90.1
3 4 /90.1
5 6 /90.1
13 14 /90.8
Ventilator
Thermistor PTC

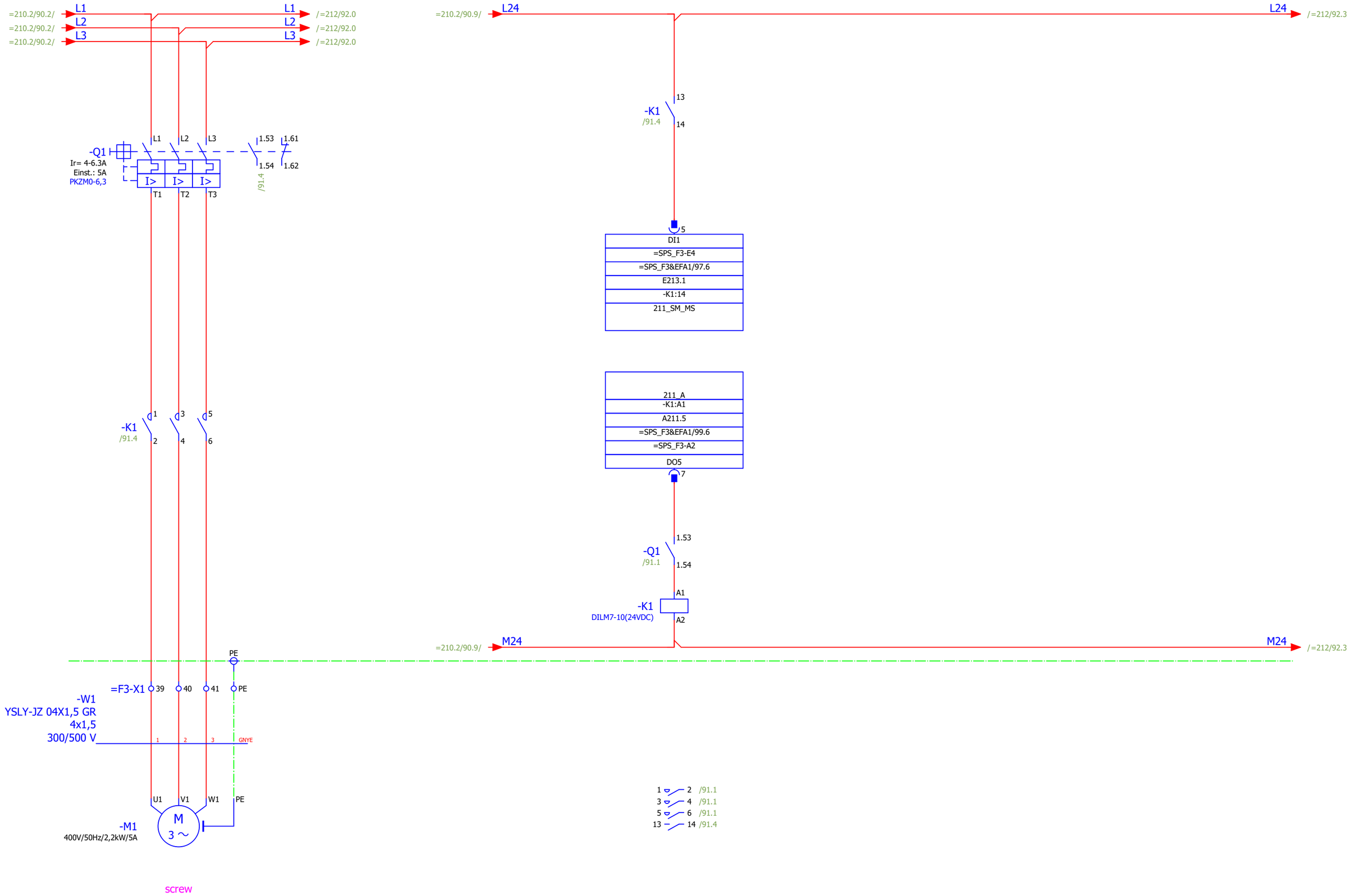
=210.2/90.2/ L1
=210.2/90.2/ L2
=210.2/90.2/ L3
L1 /=212/92.0
L2 /=212/92.0
L3 /=212/92.0
=210.2/90.9/ L24
L24 /=212/92.3
-K1
/91.4
13
14
-Q1
Ir= 4-6.3A
Einst.: 5A
PKZM0-6,3
L1 L2 L3
1.53 1.61
1.54 1.62
/91.4
I> I> I>
T1 T2 T3
5
DI1
=SPS_F3-E4
=SPS_F3&EFA1/97.6
E213.1
-K1:14
211_SM_MS
211_A
-K1:A1
A211.5
=SPS_F3&EFA1/99.6
=SPS_F3-A2
DO5
7
-K1
/91.4
1 3 5
2 4 6
1.53
-Q1
/91.1
1.54
A1
-K1
DILM7-10(24VDC)
A2
=210.2/90.9/ M24
M24 /=212/92.3
PE
=F3-X1 39 40 41 PE
-W1
YSLY-JZ 04X1,5 GR
4x1,5
300/500 V
1 2 3 GNYE
U1 V1 W1 PE
M
3 ~
-M1
400V/50Hz/2,2kW/5A
screw
1 2 /91.1
3 4 /91.1
5 6 /91.1
13 14 /91.4

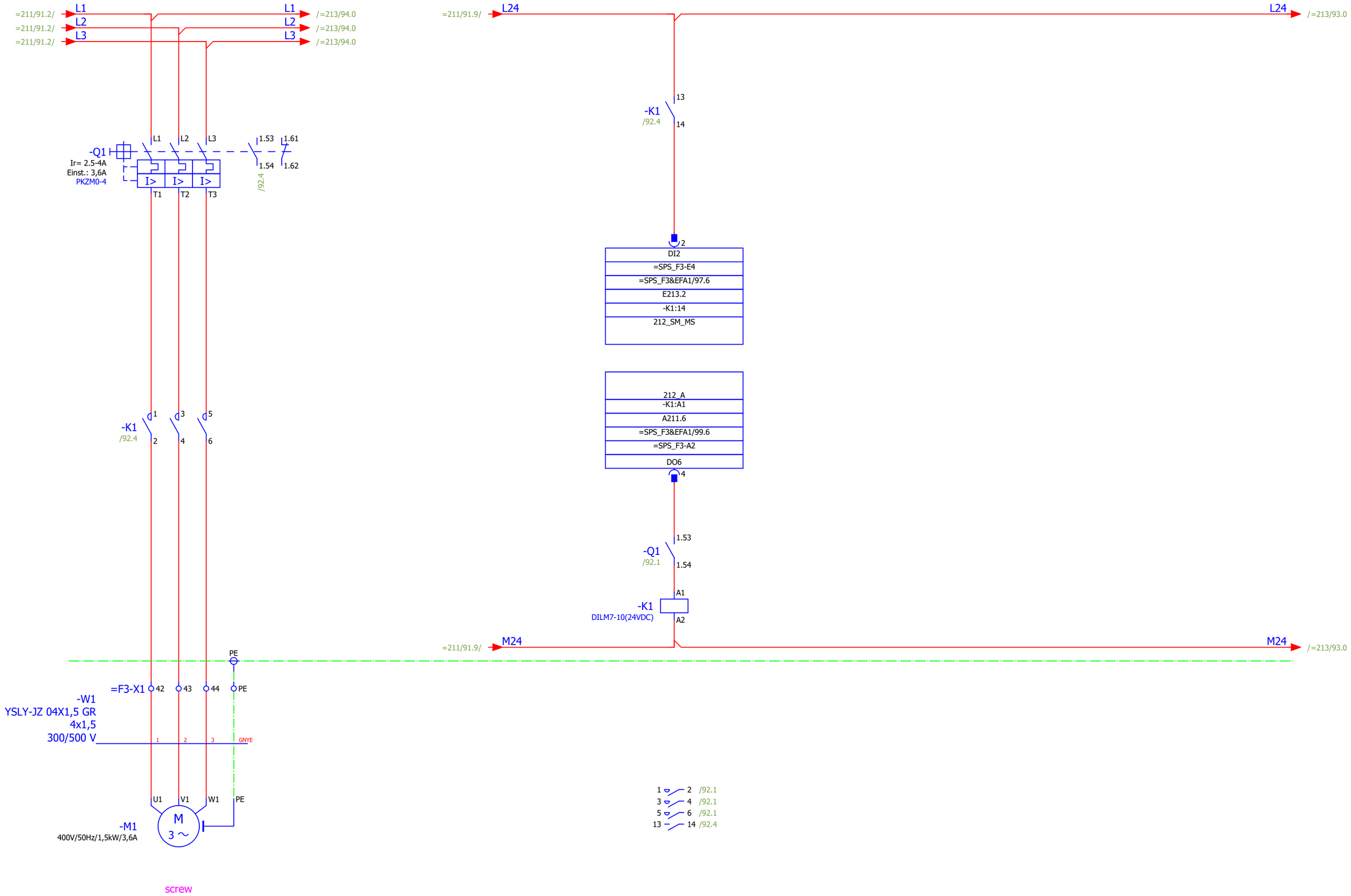

=211+F27/329

+F27/330

			Date	12.12.2019	Mixed feed plant Golden Poultry	BEYTEC	activation screw			= 212	
			Ed.	willen						+ F23	
			Appr		Field 3	... your gateway to success		1 : 1	Part II	Page	92
Modification	Date	Name	Original	V:\EPLAN\Projekte\Company\Alpaca\Beytec\2018\Feed Mill Alssad.elk	Replaced by					Page	605

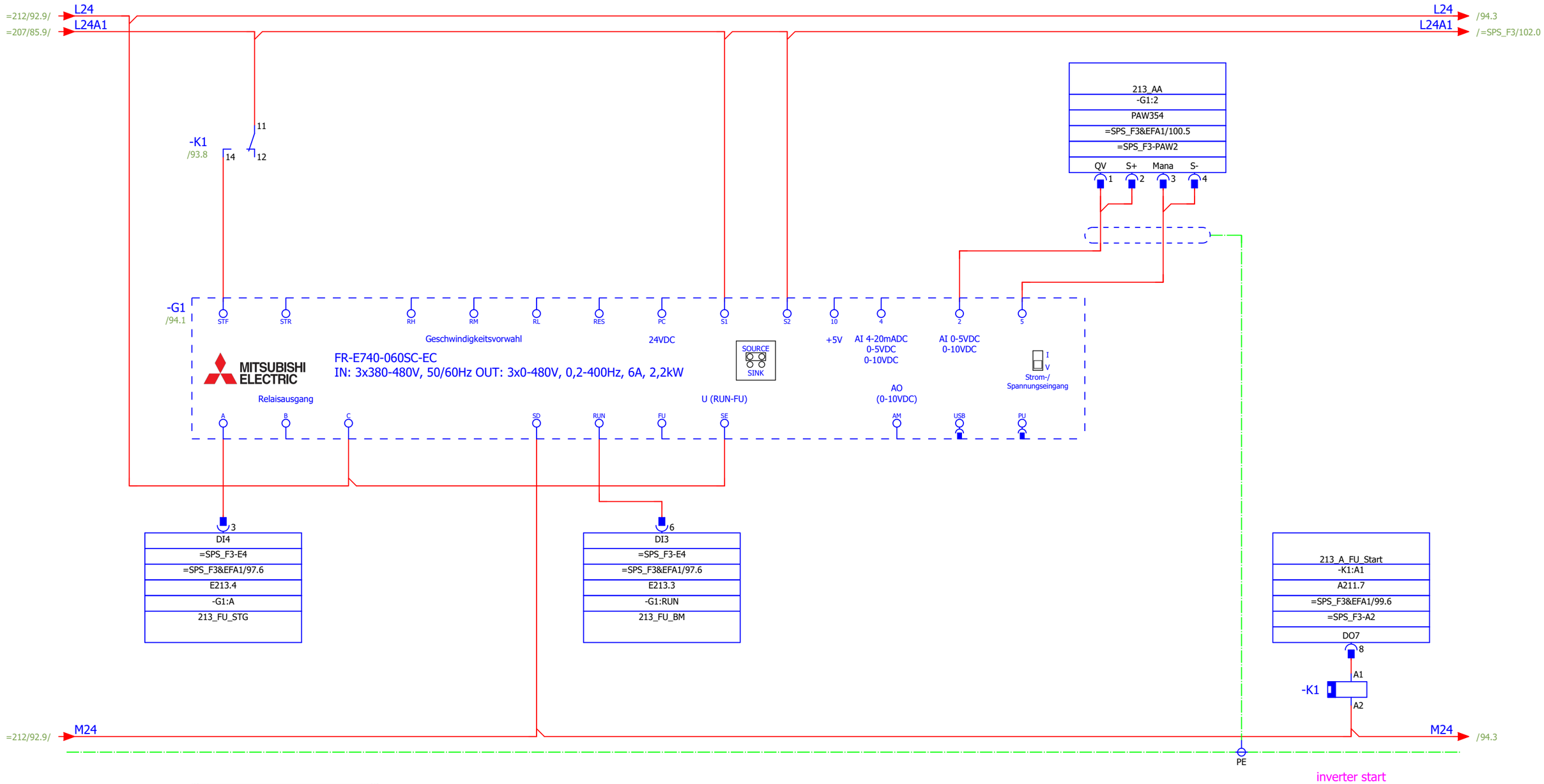

Parameter settings		
P1	=	50Hz
P7	=	5s
P8	=	5s
P73	=	0
P80	=	1,5kW
P125	=	50Hz
P192	=	99

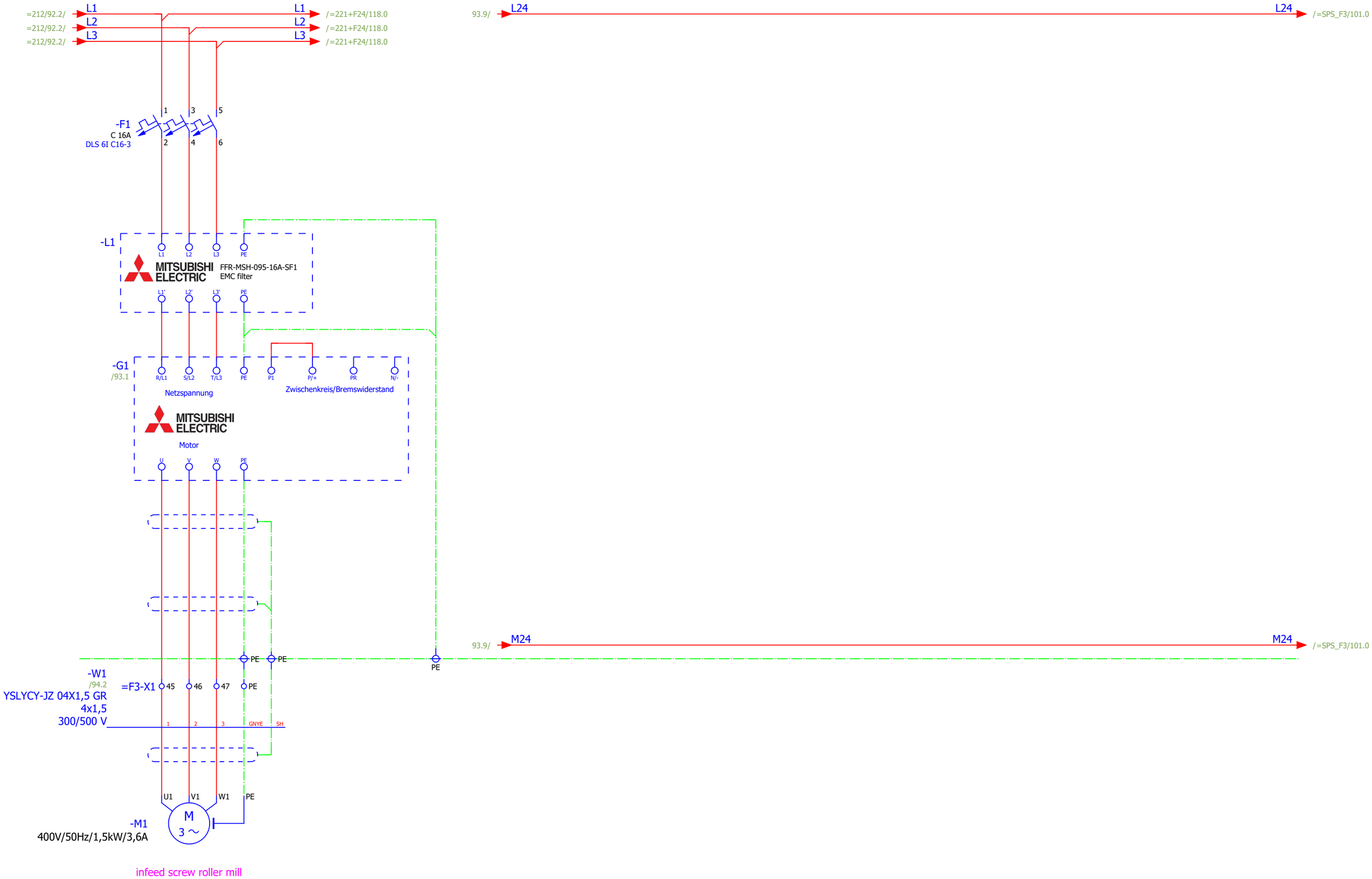

			Date	12.12.2019	Mixed feed plant Golden Poultry	BEYTEC ... your gateway to success	load circuit infeed screw roller mill	= 213	
			Ed.	willen				+ F23	
			Appr		Field 3			1 : 1 Part II	Page 94
Modification	Date	Name	Original	V:\EPLAN\Projekte\Company\Beytec\2018\Feed Mill Alssad.elk	Replaced by				Page 605

-K1
&ETC/103.2

ET200S SIEMENS
IM 151-1 STANDARD

-X1: DP — &EFS/101.6

-X20:1 1L+ — &EFS/101.3
-X20:2 2L+ — &EFS/101.4
-X20:3 1M — &EFS/101.5
-X20:4 2M — &EFS/101.6

6ES7151-1AA06-0AB0

-K2
&ETC/103.3

ET200S SIEMENS
PM-E DC 24V

2 DC24V — &EFS/102.1
3 M — &EFS/102.1
A4 AUX1 — &EFS/102.4

6 DC24V — &EFS/102.2
7 M — &EFS/102.2
A8 AUX1 — &EFS/102.4

6ES7138-4CA01-0AA0
+ TM-P15C23-A0

-K3
&ETC/103.5

ET200S SIEMENS
PM-E DC 24V

2 DC24V — &EFS/102.5
3 M — &EFS/102.6
A4 AUX1 — &EFS/102.8

6 DC24V — &EFS/102.6
7 M — &EFS/102.7
A8 AUX1 — &EFS/102.8

6ES7138-4CA01-0AA0
+ TM-P15C23-A0

			Date	12.12.2019	Mixed feed plant Golden Poultry	BEYTEC ... your gateway to success	overview bus coupler and power module	= SPS_F3	
			Ed.	willen	Field 3			+ F23	
			Appr				1 : 1	Part II	Page 95
Modification	Date	Name	Original	V:\EPLAN\Projekte\Company\Beytec\2018\Feed Mill Alssad.elk	Replaced by				Page 605

Replaced by

-E1
&ETC/103.3

ET200S SIEMENS
8 DI DC 24 S

E210.0	1 DI0	=57&EFS/74.5 =57-K1:14	057_SM_MS
E210.2	2 DI2	=113&EFS/75.1=113-G1:A	113_FU_STG
E210.4	3 DI4	=115.1&EFS/79=115.1-Q1:1.62	115_01_MS
E210.6	4 DI6	=115.1&EFS/79=115.1-F1:24	115_01_Thermistor
E210.1	5 DI1	=113&EFS/75.4=113-G1:RUN	113_FU_BM
E210.3	6 DI3	=115&EFS/77.5=115+EXT-S1:12	Allg_115_NA_T
E210.5	7 DI5	=115.1&EFS/79=115.1-K2:14	115_01_SM_D
E210.7	8 DI7	=115.2&EFS/81=115.2-Q1:1.62	115_02_MS

6ES7131-4BF00-0AA0
+ TM-E15C24-01

-E2
&ETC/103.4

ET200S SIEMENS
8 DI DC 24 V

E211.0	1 DI0	=115.2&EFS/81=115.2-K2:14	115_02_SM_D
E211.2	2 DI2	=115.3&EFS/82=115.3-K1:14	115_03_STG
E211.4	3 DI4	=115.3&EFS/82=115.3-T1:R1A	115_03_FU_STG
E211.6	4 DI6	=207&EFS/85.4=207-G1:RUN	207_FU_BM
E211.1	5 DI1	=115.2&EFS/81=115.2-F1:24	115_02_Thermistor
E211.3	6 DI3	=115.3&EFS/82=115.3-T1:R2A	115_03_FU_BM
E211.5	7 DI5	=205&EFS/84.5=205-K1:14	205_SM_MS
E211.7	8 DI7	=207&EFS/85.1=207-G1:A	207_FU_STG

6ES7131-4BF00-0AA0
+ TM-E15C24-01

			Date	12.12.2019	Mixed feed plant Golden Poultry	BEYTEC ... your gateway to success	overview inputs
			Ed.	willen	Field 3		
			Appr				
Modification	Date	Name	Original	V:\EPLAN\Projekte\Company\Beytec\2018\Feed Mill Alssad.elk	Replaced by		

= SPS_F3
+ F23
1 : 1 | Part II | Page 96 | Page 605

-E3
&ETC/103.4

ET200S SIEMENS
8 DI DC 24 V

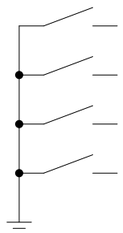

E212.0	1 DI0	=207.1&EFS/86=207.1-K1:14	207_01_SM
E212.2	2 DI2	=207.2&EFS/87=207.2-K1:14	207_02_SM
E212.4	3 DI4	=207.3&EFS/88=207.3-K1:14	207_03_SM
E212.6	4 DI6	=210&EFS/89.7=210-T1:8	210_03_Berstscheibe

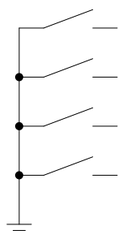

E212.1	5 DI1	=207.1&EFS/86=207.1-F2:24	207_01_Thermistor
E212.3	6 DI3	=207.2&EFS/87=207.2-F2:24	207_02_Thermistor
E212.5	7 DI5	=207.3&EFS/88=207.3-F1:24	207_03_Thermistor
E212.7	8 DI7	=210.2&EFS/90=210.2-K1:14	210_01_SM_MS

6ES7131-4BF00-0AA0
+ TM-E15C24-01

-E4
&ETC/103.4

ET200S SIEMENS
8 DI DC 24 V

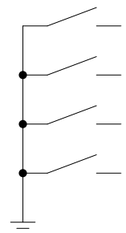

E213.0	1 DI0	=210.2&EFS/90=210.2-F1:24	210_01_Thermistor
E213.2	2 DI2	=212&EFS/92.4=212-K1:14	212_01_SM_MS
E213.4	3 DI4	=213&EFS/93.1=213-G1:A	213_FU_STG
E213.6	4 DI6		Spare

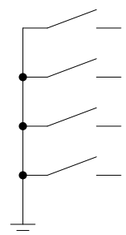

E213.1	5 DI1	=211&EFS/91.4=211-K1:14	211_01_SM_MS
E213.3	6 DI3	=213&EFS/93.4=213-G1:RUN	213_FU_BM
E213.5	7 DI5		Spare
E213.7	8 DI7		Spare

6ES7131-4BF00-0AA0
+ TM-E15C24-01

-PEW1
&ETC/103.5

ET200S SIEMENS
2 AI I 4-wire STANDARD

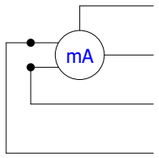

PEW350	1 M+	=210&EFS/89.5=F3-X2:19	210_02_AE_DD
PEW350	2 M-	=210&EFS/89.6	
	3 DC24V		
	4 Mana		

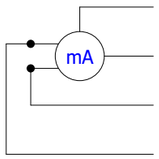

PEW352	5 M+		Spare
PEW352	6 M-		
	7 DC24V		
	8 Mana		

6ES7134-4GB11-0AB0
+ TM-E15C24-01

			Date	12.12.2019	Mixed feed plant Golden Poultry	BEYTEC ... your gateway to success	Übersicht Analogeingänge	= SPS_F3	
			Ed.	willen				+ F23	
			Appr		Field 3			1 : 1 Part II	Page 98
Modification	Date	Name	Original	V:\EPLAN\Projekte\Company\Beytec\2018\Feed Mill Alssad.elk	Replaced by				Page 605

Replaced by BEYTEC

-A1
&ETC/103.6

ET200S SIEMENS
8 DO DC24V 0,5A

A210.0 1/QX.0/DO0	1 DO0	=57&EFS/74.5 =57-K1:A1	057_A
A210.2 2/QX.2/DO2	2 DO2	=115.1&EFS/79=115.1-K5:A1	115_01_A
A210.4 3/QX.4/DO4	3 DO4	=115.3&EFS/82=115.3-K2:A1	115_03_FG_Dosier
A210.6 4/QX.6/DO6	4 DO6	=205&EFS/84.5=205-K1:A1	205_A
A210.1 5/QX.1/DO1	5 DO1	=113&EFS/75.8=113-K1:A1	113_A_FU_Start
A210.3 6/QX.3/DO3	6 DO3	=115.2&EFS/81=115.2-K5:A1	115_02_A
A210.5 7/QX.5/DO5	7 DO5	=115.3&EFS/83=115.3-K3:A1	115_03_FG_FU
A210.7 8/QX.7/DO7	8 DO7	=207&EFS/85.8=207-K1:A1	207_A_FU_Start

6ES7132-4BF00-0AA0
+ TM-E15C24-01

-A2
&ETC/103.6

ET200S SIEMENS
8 DO DC24V 0,5A

A211.0 1/QX.0/DO0	1 DO0	=207.1&EFS/86=207.1-F2:11	207_01_A
A211.2 2/QX.2/DO2	2 DO2	=207.3&EFS/88=207.3-F1:11	207_03_A
A211.4 3/QX.4/DO4	3 DO4	=210.2&EFS/90=210.2-F1:11	210_01_A
A211.6 4/QX.6/DO6	4 DO6	=212&EFS/92.4=212-K1:A1	212_A
A211.1 5/QX.1/DO1	5 DO1	=207.2&EFS/87=207.2-F2:11	207_02_A
A211.3 6/QX.3/DO3	6 DO3	=210&EFS/89.4=210-K1:A1	210_02_A
A211.5 7/QX.5/DO5	7 DO5	=211&EFS/91.4=211-K1:A1	211_A
A211.7 8/QX.7/DO7	8 DO7	=213&EFS/93.8=213-K1:A1	213_A_FU_Start

6ES7132-4BF00-0AA0
+ TM-E15C24-01

-PAW1
&ETC/103.6

ET200S SIEMENS
2 AO U STANDARD

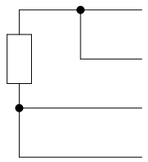

PAW350	1 QV	=113&EFS/75.7=113-G1:2	113_AA
	2 S+	=113&EFS/75.7	
	3 Mana	=113&EFS/75.7	
	4 S-	=113&EFS/75.7	

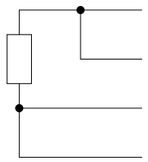

PAW352	5 QV	=207&EFS/85.7=207-G1:2	207_AA
	6 S+	=207&EFS/85.7	
	7 Mana	=207&EFS/85.7	
	8 S-	=207&EFS/85.7	

6ES7135-4FB00-0AB0
+ TM-E15C24-01

-PAW2
&ETC/103.7

ET200S SIEMENS
2 AO U STANDARD

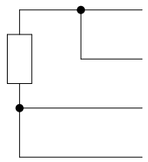

PAW354	1 QV	=213&EFS/93.7=213-G1:2	213_AA
	2 S+	=213&EFS/93.7	
	3 Mana	=213&EFS/93.7	
	4 S-	=213&EFS/93.7	

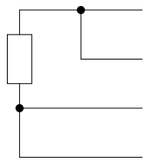

PAW356	5 QV		Spare
	6 S+		
	7 Mana		
	8 S-		

6ES7135-4FB00-0AB0
+ TM-E15C24-01

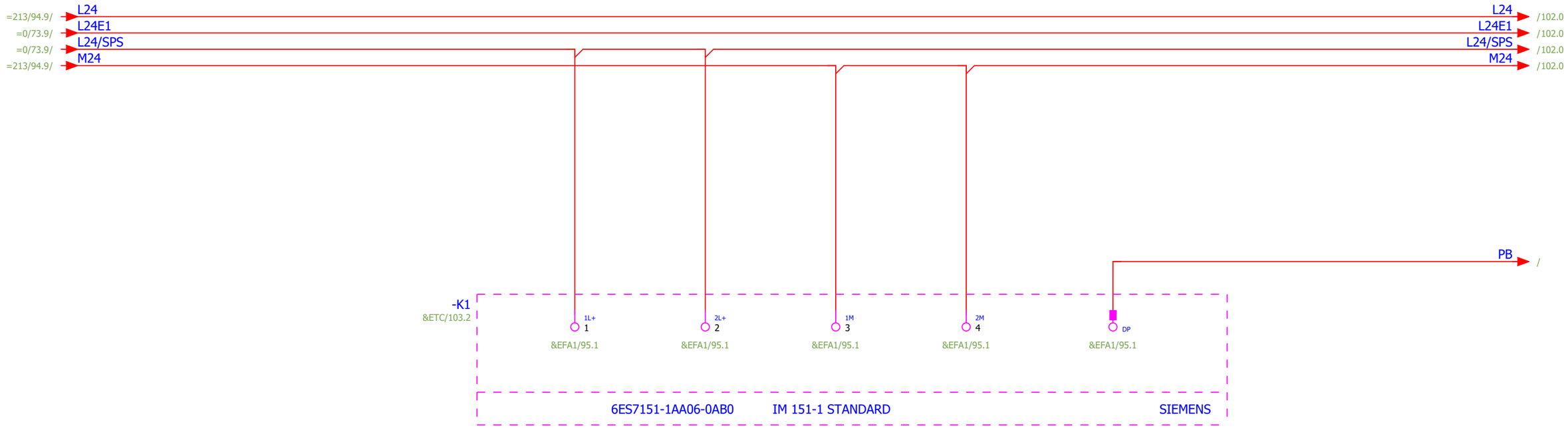
=213/94.9/
L24
=0/73.9/
L24E1
=0/73.9/
L24/SPS
=213/94.9/
M24
L24
/102.0
L24E1
/102.0
L24/SPS
/102.0
M24
/102.0
PB
/
-K1
&ETC/103.2
1L+
1
&EFA1/95.1
2L+
2
&EFA1/95.1
1M
3
&EFA1/95.1
2M
4
&EFA1/95.1
DP
&EFA1/95.1
6ES7151-1AA06-0AB0
IM 151-1 STANDARD
SIEMENS

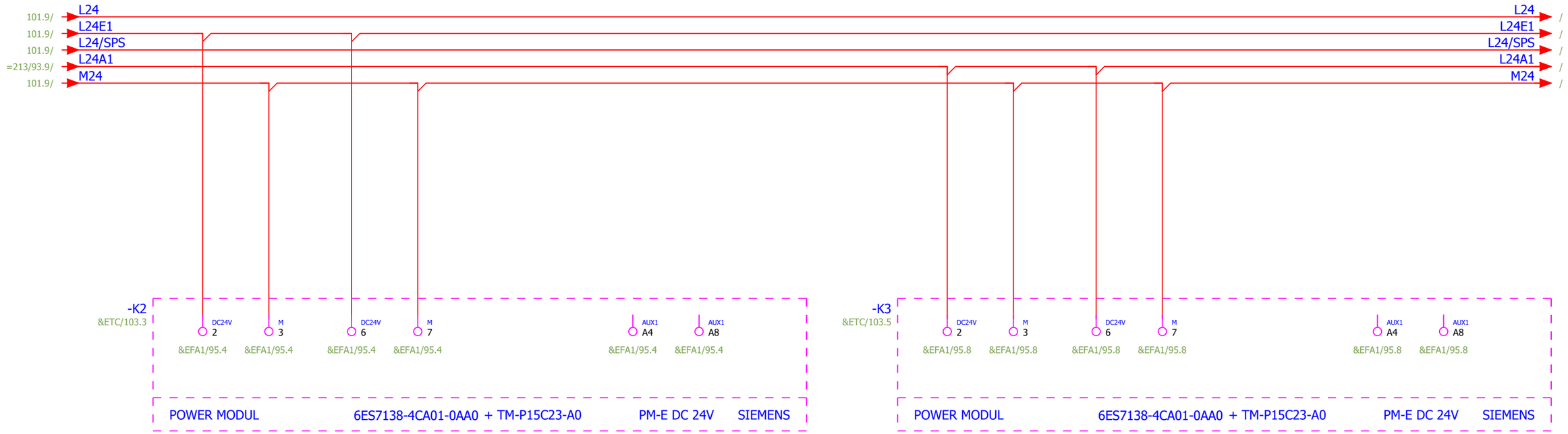

			Date	12.12.2019	Mixed feed plant Golden Poultry	BEYTEC ... your gateway to success	PLC power supply power module			= SPS_F3	
			Ed.	willen						+ F23	
			Appr		Field 3			1 : 1	Part II	Page 102	
Modification	Date	Name	Original	V:\EPLAN\Projekte\Company\Alsad\Beytec\2018\Feed Mill Alssad.elk	Replaced by					Page 605	

Replaced by

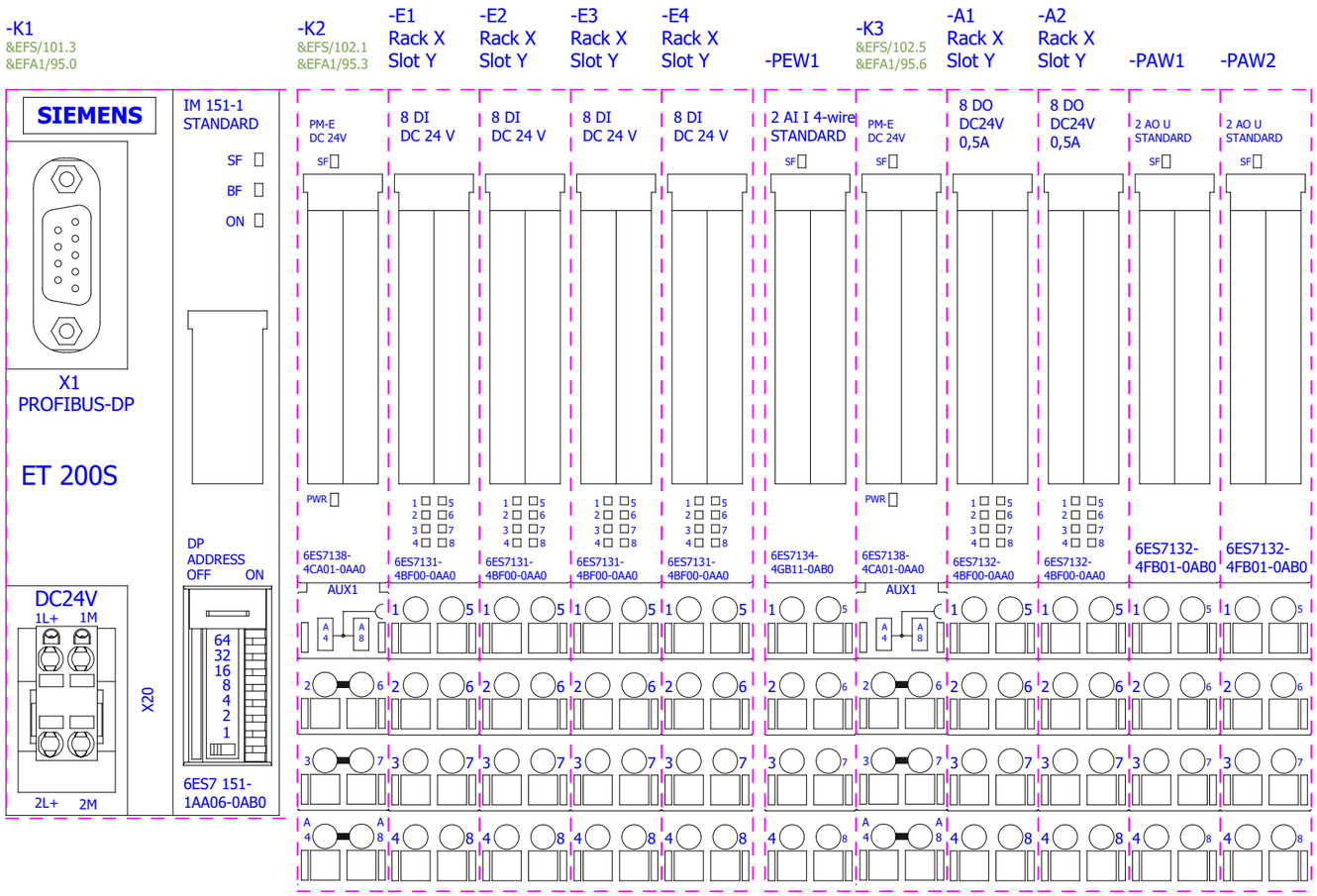
-K1
&EFS/101.3
&EFA1/95.0
SIEMENS
X1
PROFIBUS-DP
ET 200S
DC24V
1L+ 1M
2L+ 2M
X20
IM 151-1
STANDARD
SF
BF
ON
DP
ADDRESS
OFF ON
64
32
16
8
4
2
1
6ES7 151-
1AA06-0AB0
-K2
&EFS/102.1
&EFA1/95.3
PM-E
DC 24V
6ES7138-
4CA01-0AA0
AUX1
-E1
Rack X
Slot Y
8 DI
DC 24 V
6ES7131-
4BF00-0AA0
-E2
Rack X
Slot Y
8 DI
DC 24 V
6ES7131-
4BF00-0AA0
-E3
Rack X
Slot Y
8 DI
DC 24 V
6ES7131-
4BF00-0AA0
-E4
Rack X
Slot Y
8 DI
DC 24 V
6ES7131-
4BF00-0AA0
-PEW1
2 AI I 4-wire
STANDARD
6ES7134-
4GB11-0AB0
-K3
&EFS/102.5
&EFA1/95.6
PM-E
DC 24V
6ES7138-
4CA01-0AA0
AUX1
-A1
Rack X
Slot Y
8 DO
DC24V
0,5A
6ES7132-
4BF00-0AA0
-A2
Rack X
Slot Y
8 DO
DC24V
0,5A
6ES7132-
4BF00-0AA0
-PAW1
2 AO U
STANDARD
6ES7132-
4FB01-0AB0
-PAW2
2 AO U
STANDARD
6ES7132-
4FB01-0AB0
SF
PWR

BEYTEC

... your gateway to success

Company / customer	BeyTec
Project description	Golden Poultry
Job number	Part II
Mounting location	Field 4

Technical data:

Operating voltage	400 V
Operating frequency	50 Hz
Operating current	
Power network	
Control voltage	24VDC
Protection class electrical	SK I
Degree of protection	IP54
Responsible for project	Willen

Created on	21.10.2019		
Edit date	12.12.2019	by (short name) willen	Number of pages 605

Table of contents

Column X: An automatically generated page was edited

F06_001_EN

Page	Page description	supplementary page field	Date	Edited by	X
++A1+F24&BAA/104	Title page / cover sheet		12.12.2019	willen	X
++A1+F24&BAB/105	Table of contents : ++A1+F24&BAA/104 - =248.1++A1+F24&EFS/136		12.12.2019	willen	
++A1+F24&BAB/106	Table of contents : =248.2++A1+F24&EFS/137 - =SPS_F4++A1+F24&ETC/148		12.12.2019	willen	
++A1+F24&BPA/107	Summarized parts list : PXC.2702226 - ETN.M22-KC10		12.12.2019	willen	X
++A1+F24&BPA/108	Summarized parts list : ETN.M22-LEDC-G - SIE.6ES7134-4GB11-0AB0+TM-E15C24-01		12.12.2019	willen	X
=0++A1+F24&EFS/109	Control voltage field 4		12.12.2019	willen	
=215++A1+F24&EFS/110	emergency stop roller mill		12.12.2019	willen	
=215.1++A1+F24&EFS/111	load circuit upper rollers roller mill		12.12.2019	willen	
=215.1++A1+F24&EFS/112	control circuit upper roll roller mill		12.12.2019	willen	
=215.2++A1+F24&EFS/113	load circuit lower rollers roller mill		12.12.2019	willen	
=215.2++A1+F24&EFS/114	control circuit lower roll roller mill		12.12.2019	willen	
=215.3++A1+F24&EFS/115	activation internal fedding roller mill		12.12.2019	willen	
=215.3++A1+F24&EFS/116	load circuit internal feeding roller mill		12.12.2019	willen	
=221++A1+F24&EFS/117	emergency stop intake		12.12.2019	willen	
=221++A1+F24&EFS/118	load circuit screw		12.12.2019	willen	
=222++A1+F24&EFS/119	load circuit elevator		12.12.2019	willen	
=226++A1+F24&EFS/120	activation dosing screw		12.12.2019	willen	
=226.1++A1+F24&EFS/121	Dosing screw		12.12.2019	willen	
=226.2++A1+F24&EFS/122	Dosing screw		12.12.2019	willen	
=226.3++A1+F24&EFS/123	Dosing screw		12.12.2019	willen	
=226.4++A1+F24&EFS/124	Dosing screw		12.12.2019	willen	
=226.5++A1+F24&EFS/125	Dosing screw		12.12.2019	willen	
=227++A1+F24&EFS/126	Dosing scale 3		12.12.2019	willen	
=242++A1+F24&EFS/127	load circuit mixer		12.12.2019	willen	
=242++A1+F24&EFS/128	control circuit mixer		12.12.2019	willen	
=242++A1+F24&EFS/129	saftey circuit mixer		12.12.2019	willen	
=243++A1+F24&EFS/130	Ansteuerung Pumpe Öldosierung		12.12.2019	willen	
=243++A1+F24&EFS/131	load circuit pump oil metering		12.12.2019	willen	
=245++A1+F24&EFS/132	load circuit trough chain conveyor		12.12.2019	willen	
=246++A1+F24&EFS/133	load circuit elevator		12.12.2019	willen	
=247++A1+F24&EFS/134	load circuit trough chain conveyor		12.12.2019	willen	
=248++A1+F24&EFS/135	load circuit trough chain conveyor		12.12.2019	willen	
=248.1++A1+F24&EFS/136	mot. slide		12.12.2019	willen	

Table of contents

Column X: An automatically generated page was edited

F06_001_EN

Page	Page description	supplementary page field	Date	Edited by	X
=248.2++A1+F24&EFS/137	mot. slide		12.12.2019	willen	
=248.3++A1+F24&EFS/138	mot. slide		12.12.2019	willen	
=SPS_F4++A1+F24&EFA1/139	overview bus coupler and power module		12.12.2019	willen	
=SPS_F4++A1+F24&EFA1/140	overview inputs		12.12.2019	willen	
=SPS_F4++A1+F24&EFA1/141	overview inputs		12.12.2019	willen	
=SPS_F4++A1+F24&EFA1/142	overview inputs		12.12.2019	willen	
=SPS_F4++A1+F24&EFA1/143	overview outputs		12.12.2019	willen	
=SPS_F4++A1+F24&EFA1/144	overview outputs		12.12.2019	willen	
=SPS_F4++A1+F24&EFA1/145	overview analog outputs		12.12.2019	willen	
=SPS_F4++A1+F24&EFS/146	PLC power supply bus coupler		12.12.2019	willen	
=SPS_F4++A1+F24&EFS/147	PLC power supply power module		12.12.2019	willen	
=SPS_F4++A1+F24&ETC/148	PLC overview field 4		12.12.2019	willen	

Summarized parts list

F02_002_en_US

Order number	Quantity	Designation	Type number	Supplier
2702226	1	LED enclosure light	PLD E 608 W 315/F	PXC
T221761	3	MS220K, PTC-resistor trip device, AC/DC24V	MS220K	ZIEHL
277274	4	Contactor, 3p+1N/O, 15kW/400V/AC3	DILM32-10(RDC24)	ETN
276421	6	Auxiliary contact module, 1NO+1N/C, surface mounting, screw connection	DILA-XHI11	ETN
283131	2	Secondary terminal wire kit, star-delta, for DILM17-32	DILM32-XSL	ETN
277146	2	Contactor, 3p+1N/O, 11kW/400V/AC3	DILM25-10(RDC24)	ETN
83.82.0.240.0000	3	Modular timer, Star-delta (SD) - AC (50/60 Hz)/DC - 24...240 V	83.82.0.240.0000	FINDER
2903370	8	????	RIF-0-RPT-24DC/21	PHOENIX
222394	2	Motor-protective circuit-breaker, 3p, Ir=50-58A, screw connection	PKZM4-58	EATON
082882	15	Standard auxiliary contact, 1N/O+1N/C, flush mounting, screw connection	NHI-E-11-PKZ0	EATON
101457	4	Busbar adapter, 55mm, 63A, 1TS	BBA4-63	ETN
3804650155	2	Current transformer	TABB10C100	IME
VW3SKFN007UA2	1	Funkentstörfilter, 7A	VW3SKFN007UA2	SCHNEIDER
072739	1	Motor-protective circuit-breaker, 3p, Ir=6.3-10A, screw connection	PKZM0-10	EATON
101451	8	Busbar adapter, 45mm, 25A, 1TS	BBA0-25	ETN
	1	Altivar 312	ATV312H075N4	SCHNEIDER
277018	2	Contactor, 3p+1N/O, 7.5kW/400V/AC3	DILM17-10(RDC24)	ETN
046938	4	Motor-protective circuit-breaker, 3p, Ir=10-16A, screw connection	PKZM0-16	EATON
239349	2	Wiring module, for DILM17-M32	PKZM0-XM32DE	ETN
234804	1	Inverter, degree of protection IP 20	FR-E740-060SC-EC	MITSUBISHI
215004	1	EMC filter	FFR-MSH-095-16A-RF1	MITSUBISHI
4970886	2	LS- Schalter C16 / 3-pol	DLS 6I C16-3	Doepke
276565	8	Contactor, 3p+1N/O, 3kW/400V/AC3	DILM7-10(24VDC)	ETN
072737	7	Motor-protective circuit-breaker, 3p, Ir=2.5-4A, screw connection	PKZM0-4	EATON
283149	10	Kit, +component adapter, for DOL starter for DILM7-M15	PKZM0-XDM12	ETN
	0			
216535	1	Aufbaugehäuse einfach M22-I1	M22-I1	EATON
216380	1	Contact element, 1N/O, base fixing, 6. contact, screw connection	M22-KC10	EATON

Summarized parts list

F02_002_en_US

Order number	Quantity	Designation	Type number	Supplier
216562	1	LED element, green, base fixing, 12-30VAC/DC	M22-LEDC-G	EATON
216938	1	Illuminated pushbutton actuator, flush, green I, momentary	M22-DL-G-X1	EATON
277844	2	Contactor, 3p, 22kW/400V/AC3	DILM50(RDC24)	ETN
277949	2	Auxiliary contact module, 3N/O+1N/C	DILM150-XHI31	ETN
277946	1	Auxiliary contact module, 1N/O+1N/C	DILM150-XHI11	ETN
277780	1	Contactor, 3p, 18.5kW/400V/AC3	DILM40(RDC24)	ETN
265722	1	Circuit-breaker, 3p, 100A	NZMN1-M100	ETN
216376	1	Contact element, 1N/O, front mount, 6. contact, screw connection	M22-K10	EATON
216378	1	Contact element, 1 N/C, front mount, 6. contact, screw connection	M22-K01	EATON
104554	1	Sammelschienenadapter, 90 mm, 160 A,	NZM1-XAD160	ETN
PT100.VGS	1	PT100 Temperaturmeßfühler	PT100.VGS	WIK
T224107	1	TR111V, Pt 100 Temperature-Relay, -10….200°C, AC/DC 24-240V	TR111V	ZIEHL
234803	1	Inverter, degree of protection IP 20	FR-E740-040SC-EC	MIT
214953	1	EMC filter	FFR-MSH-040-8A-RF1	MIT
276845	1	Contactor, 3p+1N/O, 5.5kW/400V/AC3	DILM12-10(24VDC)	ETN
072738	1	Motor-protective circuit-breaker, 3p, Ir=4-6.3A, screw connection	PKZM0-6,3	EATON
IG512A	6	Inductive sensor, DC PNP, Normally closed	IGK3005-APKG/AM/US104DPO/3G/3D	IFM
2900574	3	Hybrid motor starter	ELR H5-I-SC- 24DC/500AC-2	PXC
2903334	6	relay module 24DC/2X21	RIF-1-RPT-LDP-24DC/2X21	PHOENIX
6ES7132-4BF00-0AA0 / 6ES7193-4CB30-0AA0	4	8DO, 24V DC, 0.5A / TM-E15C24-01	6ES7132-4BF00-0AA0 / 6ES7193-4CB30-0AA0	SIE
6ES7131-4BF00-0AA0 / 6ES7193-4CB30-0AA0	5	8DI, 24V DC / TM-E15C24-01	6ES7131-4BF00-0AA0 / 6ES7193-4CB30-0AA0	SIE
6ES7151-1AA06-0AB0	1	ET200S, IM151-1 STD, 12MBIT/S	6ES7151-1AA06-0AB0	SIE
6ES7138-4CA01-0AA0 / 6ES7193-4CD30-0AA0	2	PM-E, DC 24V / TM-P15C23-A0	6ES7138-4CA01-0AA0 / 6ES7193-4CD30-0AA0	SIE
6ES7135-4FB01-0AB0 / 6ES7193-4CB30-0AA0	1	2AO U, +/-10V, 1-5V, 13BIT / TM-E15C24-01	6ES7135-4FB01-0AB0 / 6ES7193-4CB30-0AA0	SIE
6ES7134-4GB11-0AB0 / 6ES7193-4CB30-0AA0	1	2AI STD I-4DMU, 4-20MA / TM-E15C24-01	6ES7134-4GB11-0AB0 / 6ES7193-4CB30-0AA0	SIE

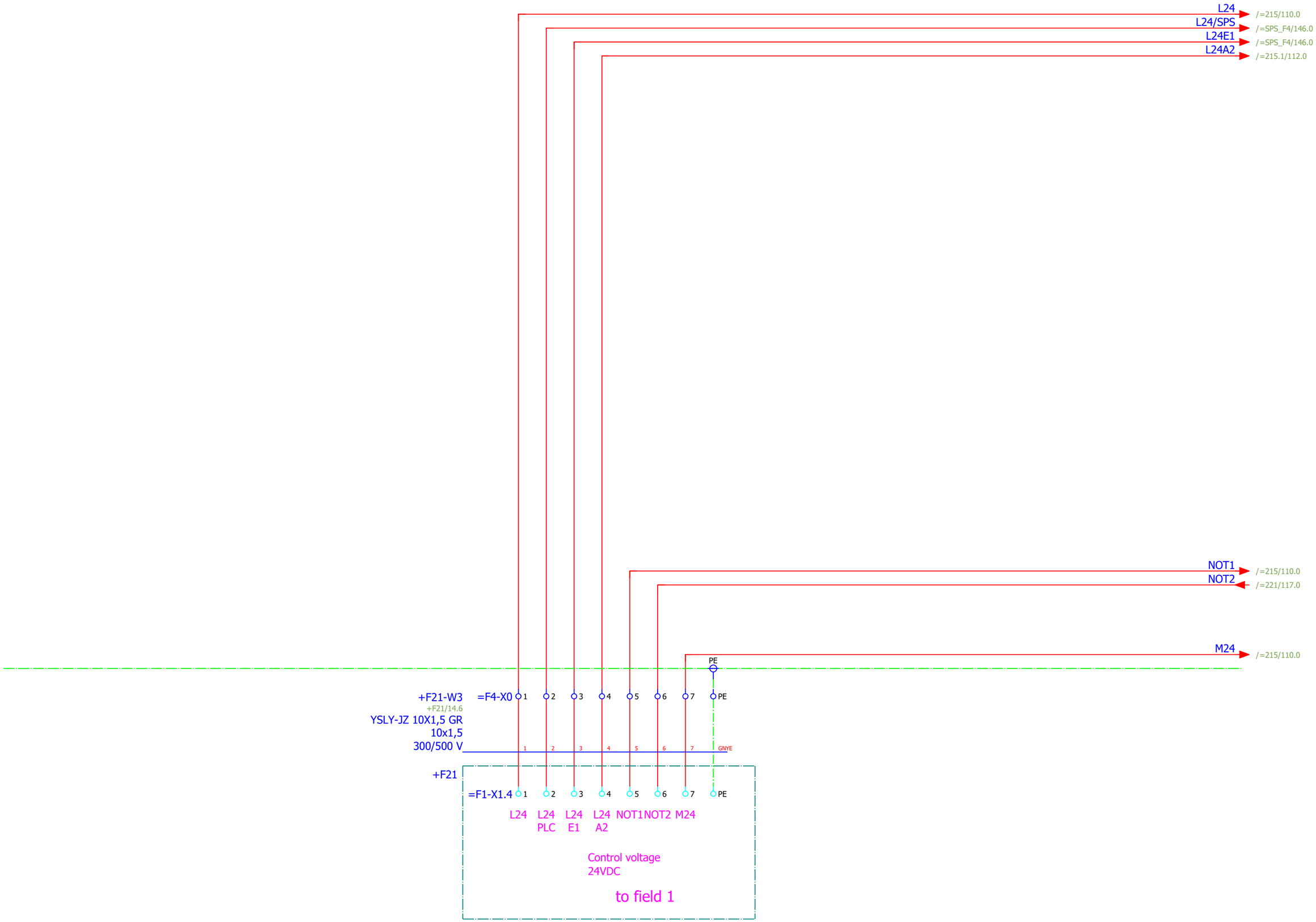

			Date	12.12.2019	Mixed feed plant Golden Poultry	BEYTEC ... your gateway to success	Control voltage field 4	= 0	
			Ed.	willen				+ F24	
			Appr		Field 4			1 : 1 / Part II	Page 109
Modification	Date	Name	Original	V:\EPLAN\Projekte\Company\Alsad\Beytec\2018\Feed Mill Alssad.elk	Replaced by				Page 605

Replaced by

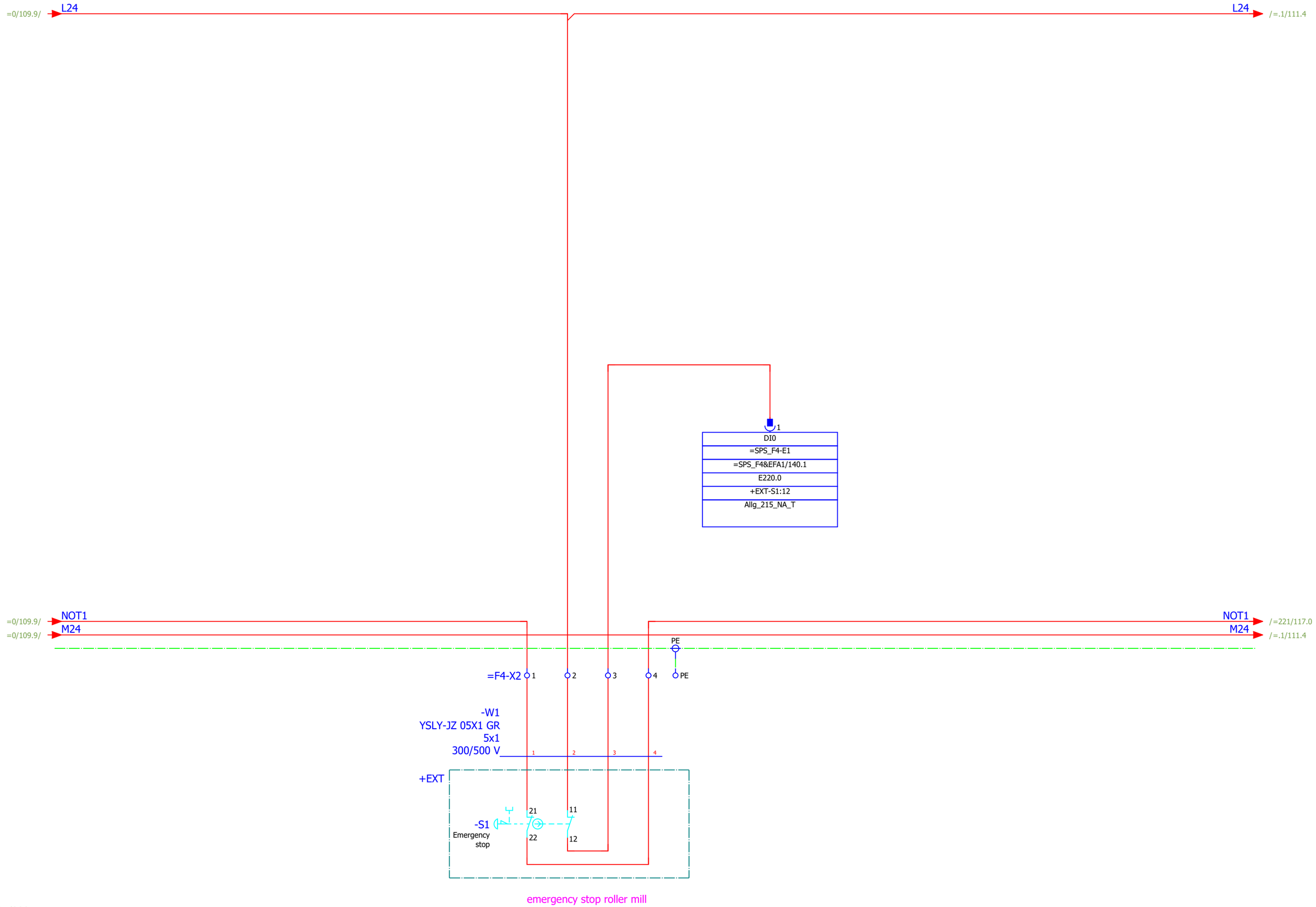

=214.2+F27/332

=.1/111

			Date	12.12.2019	Mixed feed plant Golden Poultry	BEYTEC ... your gateway to success	emergency stop roller mill	= 215	
			Ed.	willen				+ F24	
			Appr		Field 4			1 : 1 Part II	Page 110
Modification	Date	Name	Original	V:\EPLAN\Projekte\Company\Alssad\Beytec\2018\Feed Mill Alssad.elk	Replaced by				Page 605

Replaced by

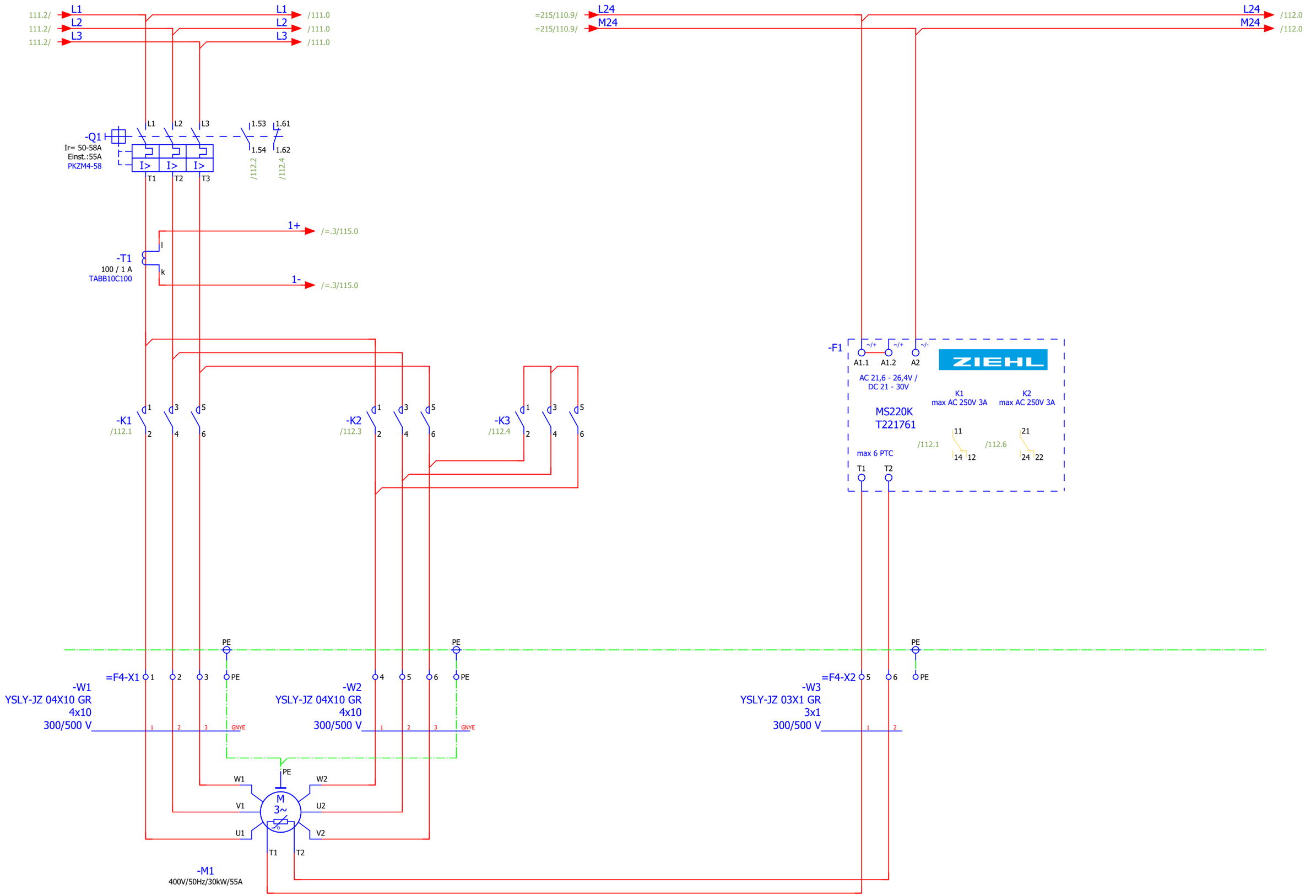
111.2/ L1
111.2/ L2
111.2/ L3
L1 /111.0
L2 /111.0
L3 /111.0
=215/110.9/ L24
=215/110.9/ M24
L24 /112.0
M24 /112.0
-Q1
Ir= 50-58A
Einst.:55A
PKZM4-58
I> I> I>
T1 T2 T3
1.53 1.61
1.54 1.62
/112.2
/112.4
1+ /=.3/115.0
1- /=.3/115.0
-T1
100 / 1 A
TABB10C100
-K1 /112.1
-K2 /112.3
-K3 /112.4
-F1
A1.1 A1.2 A2
AC 21,6 - 26,4V /
DC 21 - 30V
ZIEHL
MS220K
T221761
K1
max AC 250V 3A
K2
max AC 250V 3A
/112.1
/112.6
max 6 PTC
T1 T2
PE
=F4-X1
-W1
YSLY-JZ 04X10 GR
4x10
300/500 V
-W2
YSLY-JZ 04X10 GR
4x10
300/500 V
=F4-X2
-W3
YSLY-JZ 03X1 GR
3x1
300/500 V
GNYE
W1 W2 V1 U2 U1 V2 T1 T2
M
3~
-M1
400V/50Hz/30kW/55A

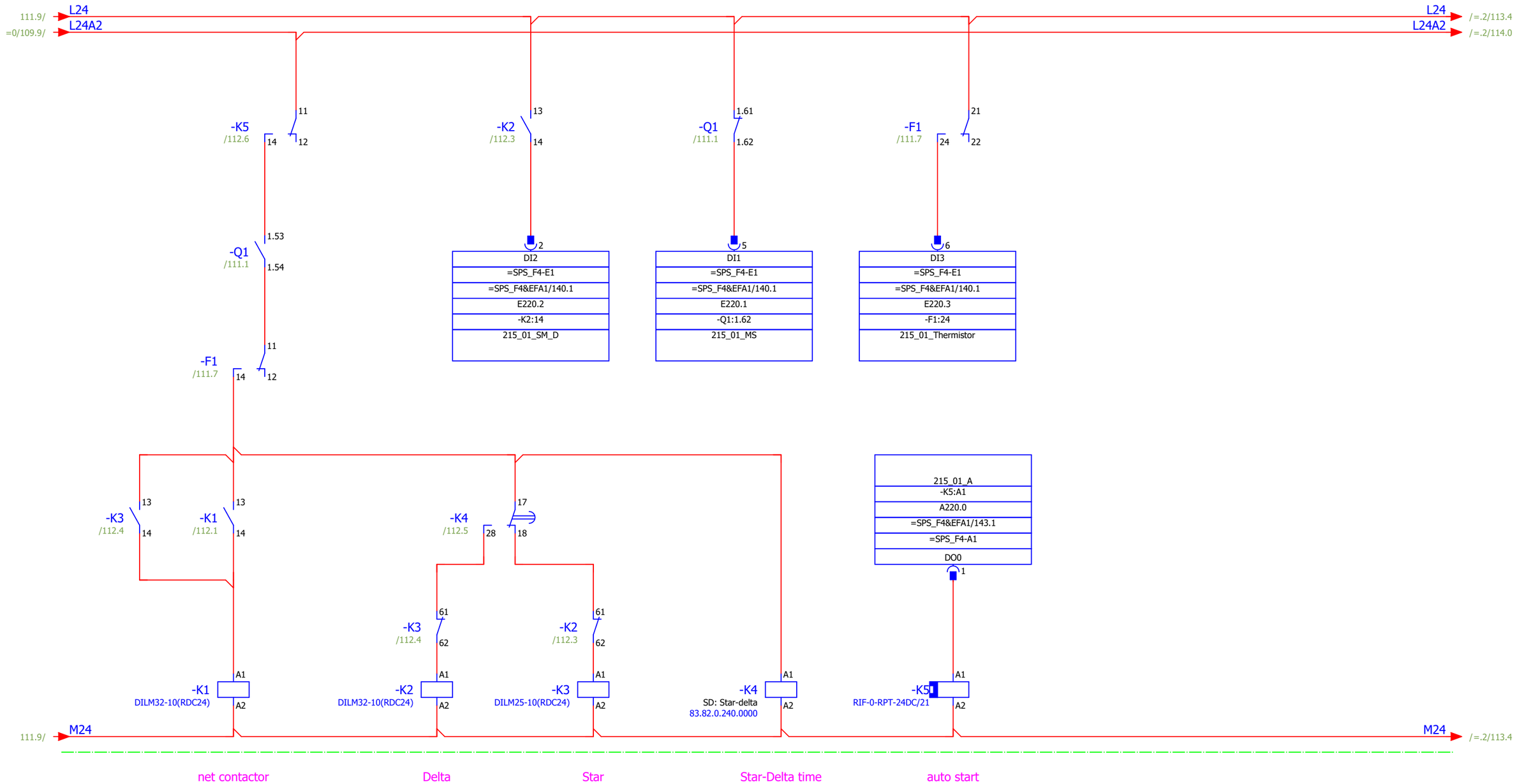

			Date	12.12.2019	Mixed feed plant Golden Poultry	BEYTEC ... your gateway to success	control circuit upper roll roller mill		= 215.1
			Ed.	willen					+ F24
			Appr		Field 4			1 : 1 / Part II	Page 112
Modification	Date	Name	Original	V:\EPLAN\Projekte\Company\Beytec\2018\Feed Mill Alssad.elk	Replaced by				Page 605

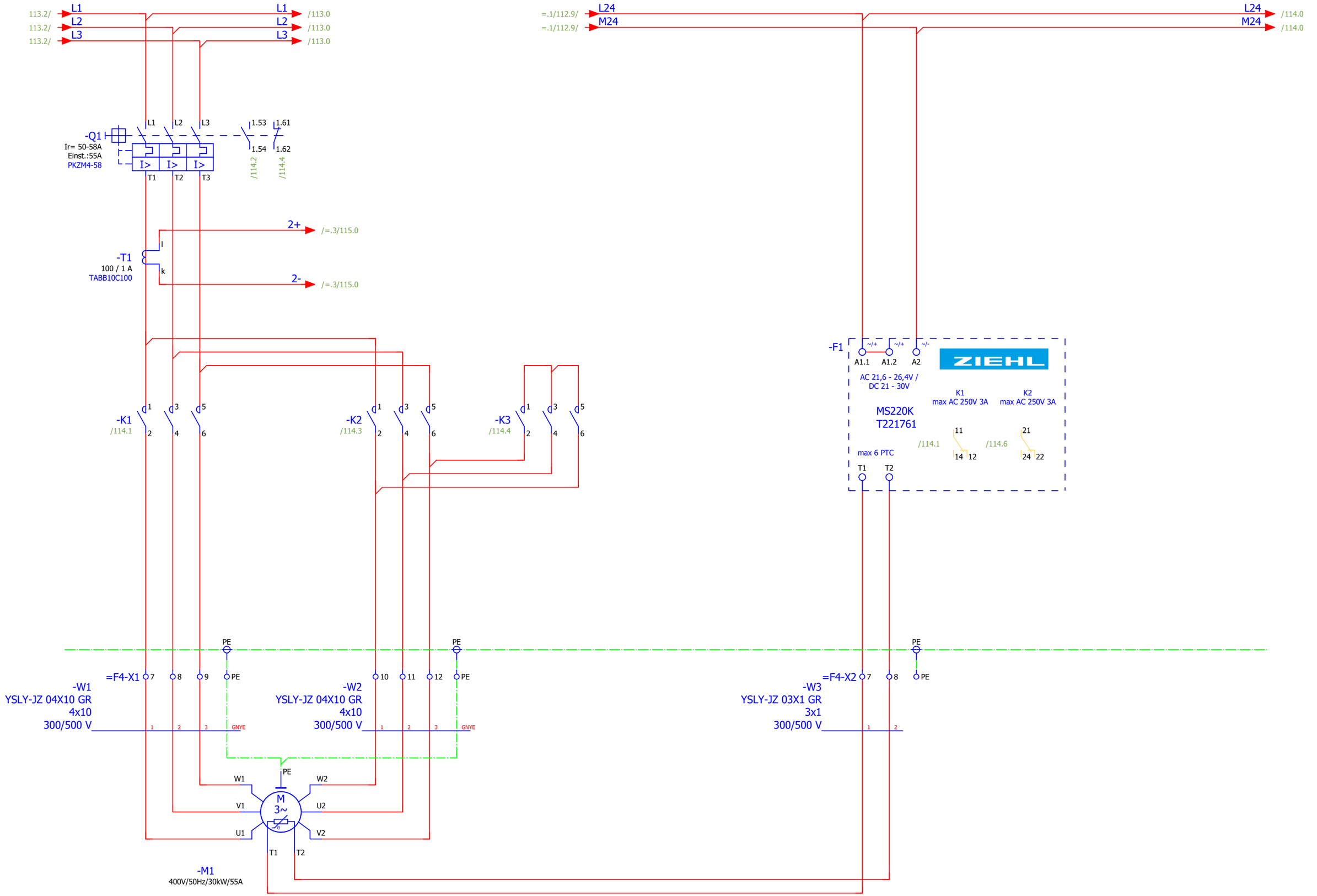
113.2/ L1
113.2/ L2
113.2/ L3
L1 /113.0
L2 /113.0
L3 /113.0
=.1/112.9/ L24
=.1/112.9/ M24
L24 /114.0
M24 /114.0
-Q1
Ir= 50-58A
Einst.:55A
PKZM4-58
I> I> I>
T1 T2 T3
1.53 1.61
1.54 1.62
/114.2
/114.4
2+ /=.3/115.0
2- /=.3/115.0
-T1
100 / 1 A
TABB10C100
-K1 /114.1
-K2 /114.3
-K3 /114.4
-F1
A1.1 A1.2 A2
AC 21,6 - 26,4V /
DC 21 - 30V
ZIEHL
MS220K
T221761
K1
max AC 250V 3A
K2
max AC 250V 3A
/114.1
/114.6
max 6 PTC
T1 T2
PE
=F4-X1
-W1
YSLY-JZ 04X10 GR
4x10
300/500 V
-W2
YSLY-JZ 04X10 GR
4x10
300/500 V
=F4-X2
-W3
YSLY-JZ 03X1 GR
3x1
300/500 V
GNYE
W1 W2 V1 U2 U1 V2 T1 T2
M
3~
-M1
400V/50Hz/30kW/55A

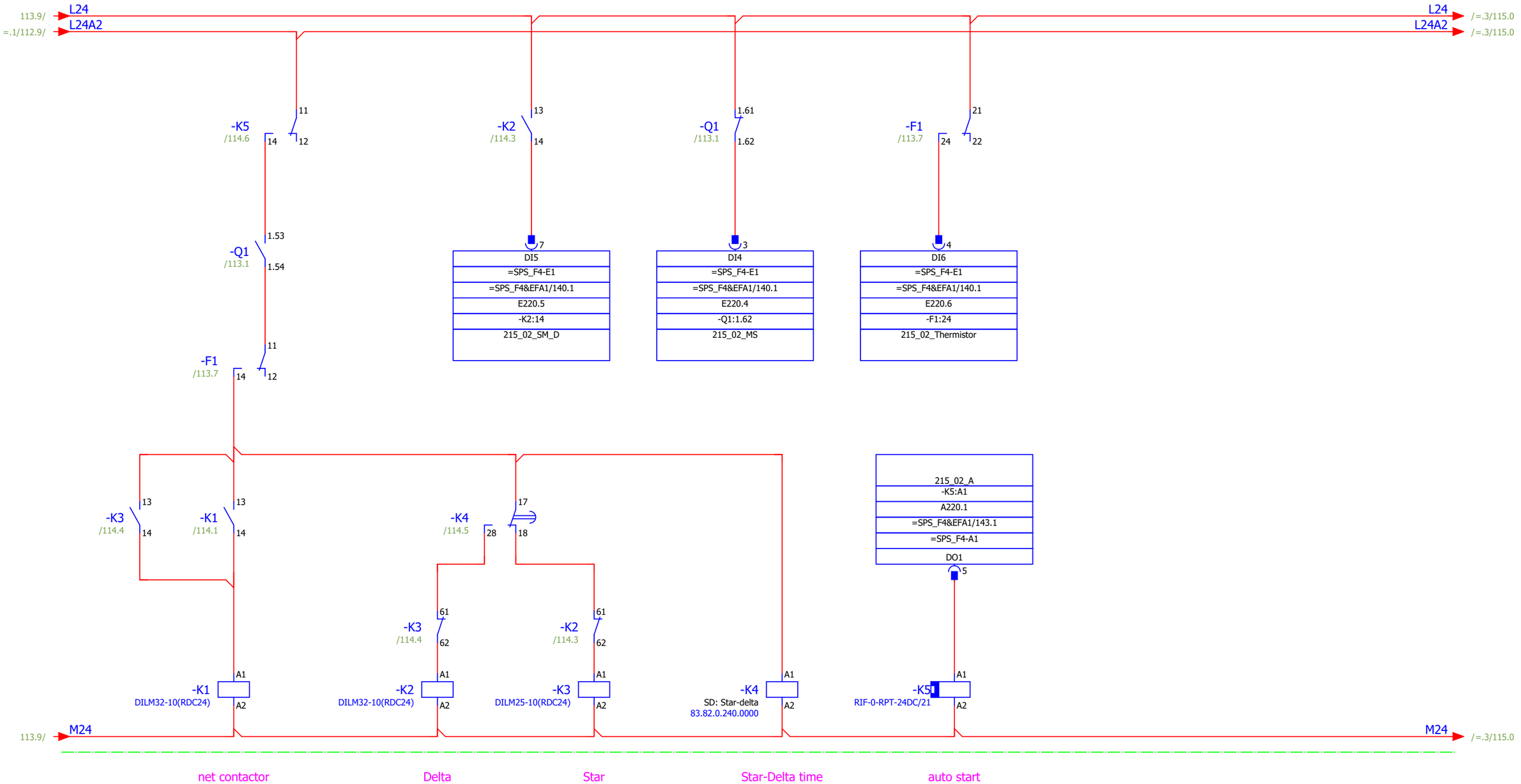

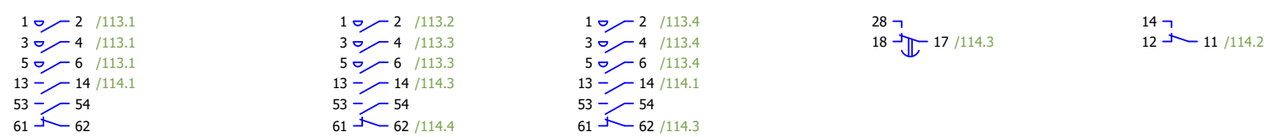

			Date	12.12.2019	Mixed feed plant Golden Poultry	BEYTEC ... your gateway to success	control circuit lower roll roller mill	= 215.2
			Ed.	willen				+ F24
			Appr		Field 4		1 : 1	Part II
Modification	Date	Name	Original	V:\EPLAN\Projekte\Company\Beytec\2018\Feed Mill Alssad.elk	Replaced by			Page 114 / Page 605

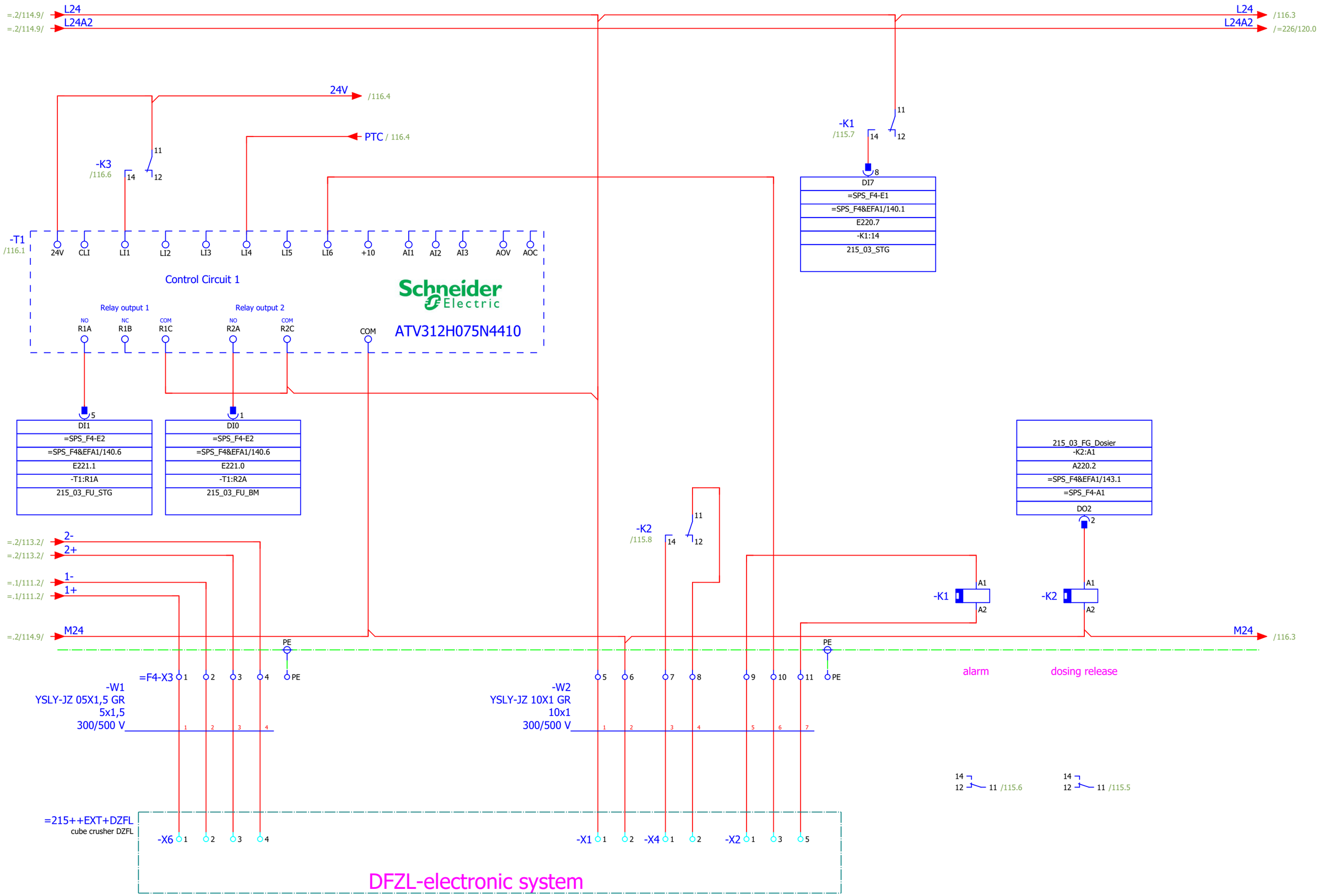
=.2/114.9/
L24
L24A2
/116.3
/=226/120.0
24V
/116.4
PTC / 116.4
-K3
/116.6
-K1
/115.7
-T1
/116.1
24V CLI LI1 LI2 LI3 LI4 LI5 LI6 +10 AI1 AI2 AI3 AOV AOC
Control Circuit 1
Relay output 1
Relay output 2
NO NC COM NO COM
R1A R1B R1C R2A R2C COM
ATV312H075N4410
DI7
=SPS_F4-E1
=SPS_F4&EFA1/140.1
E220.7
-K1:14
215_03_STG
DI1
=SPS_F4-E2
=SPS_F4&EFA1/140.6
E221.1
-T1:R1A
215_03_FU_STG
DI0
=SPS_F4-E2
=SPS_F4&EFA1/140.6
E221.0
-T1:R2A
215_03_FU_BM
215_03_FG_Dosier
-K2:A1
A220.2
=SPS_F4&EFA1/143.1
=SPS_F4-A1
DO2
-K2
/115.8
=.2/113.2/
2-
2+
=.1/111.2/
1-
1+
M24
PE
-K1
-K2
A1
A2
alarm
dosing release
=F4-X3
-W1
YSLY-JZ 05X1,5 GR
5x1,5
300/500 V
-W2
YSLY-JZ 10X1 GR
10x1
300/500 V
/115.6
/115.5
=215++EXT+DZFL
cube crusher DZFL
-X6
-X1
-X4
-X2
DFZL-electronic system

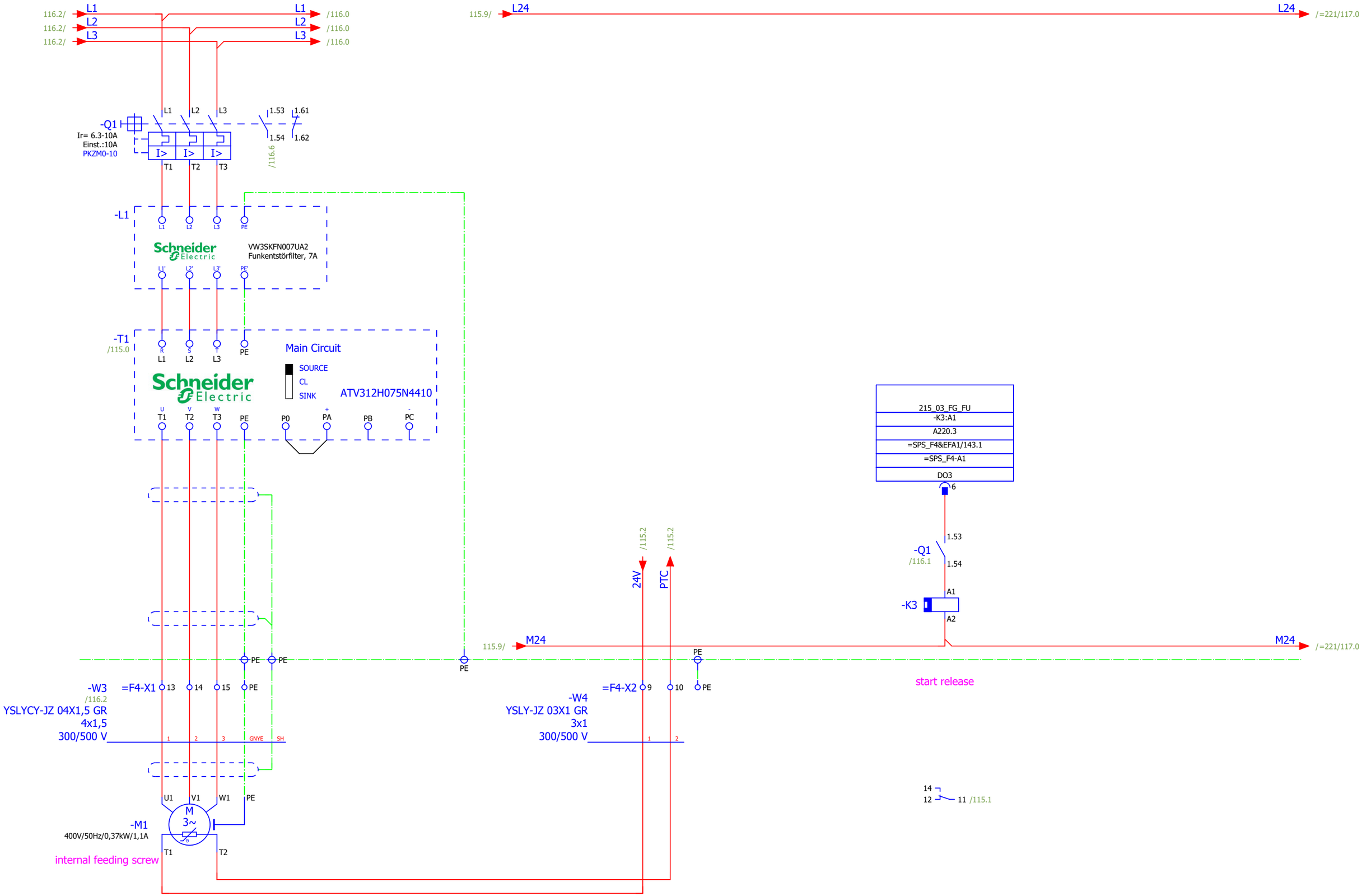

115

=SPS_F3+F23&EFA1/95

			Date	12.12.2019	Mixed feed plant Golden Poultry	BEYTEC	load circuit internal feeding roller mill			= 215.3	
			Ed.	willen						+ F24	
			Appr		Field 4	... your gateway to success		1 : 1	Part II	Page 116	
Modification	Date	Name	Original	V:\EPLAN\Projekte\Company\Beytec\2018\Feed Mill Alssad.elk	Replaced by					Page 605	

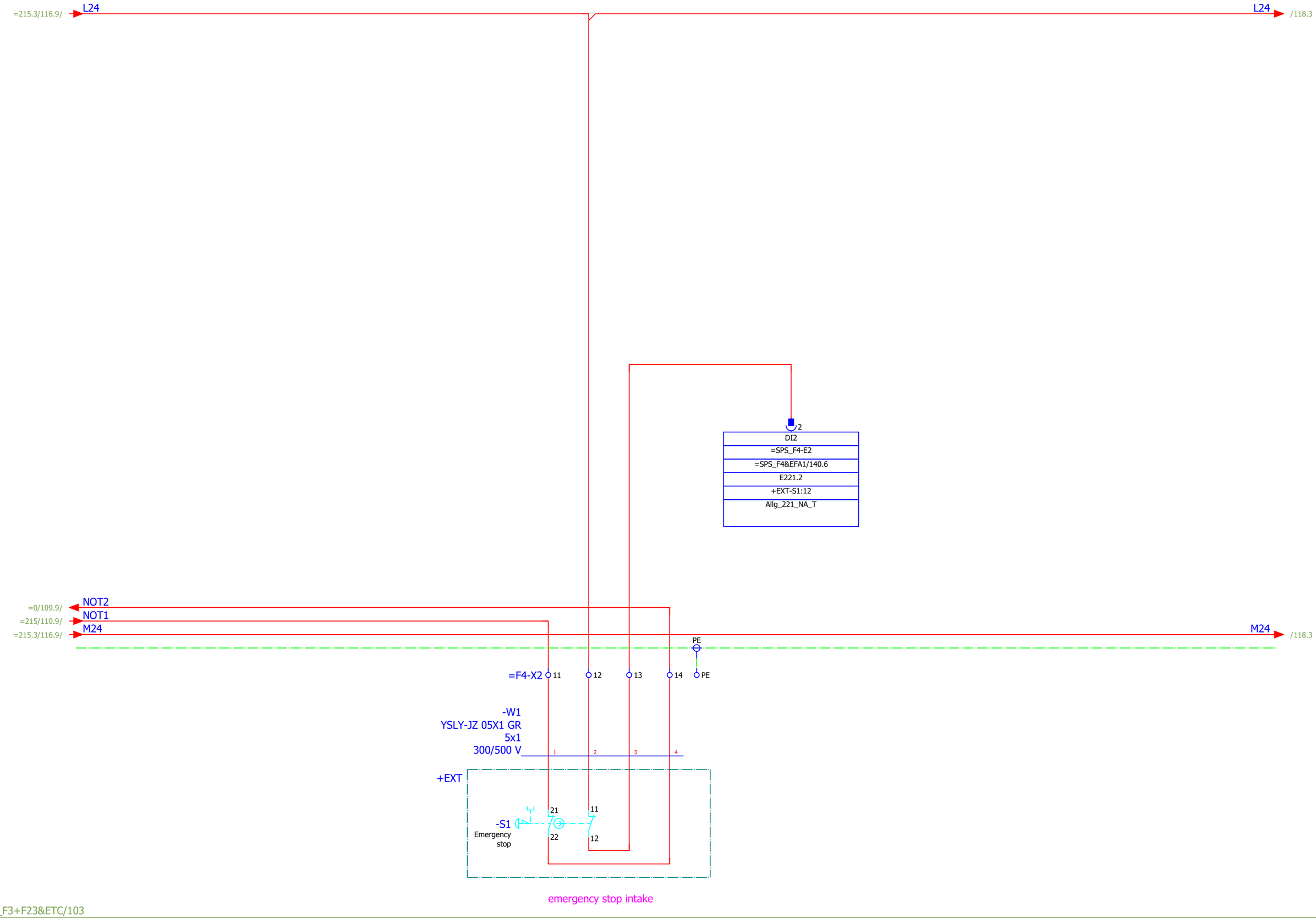
=215.3/116.9/
L24
L24
/118.3
2
DI2
=SPS_F4-E2
=SPS_F4&EFA1/140.6
E221.2
+EXT-S1:12
Allg_221_NA_T
=0/109.9/
NOT2
=215/110.9/
NOT1
=215.3/116.9/
M24
M24
/118.3
PE
=F4-X2
11
12
13
14
PE
-W1
YSLY-JZ 05X1 GR
5x1
300/500 V
1
2
3
4
+EXT
-S1
Emergency
stop
21
22
11
12
emergency stop intake

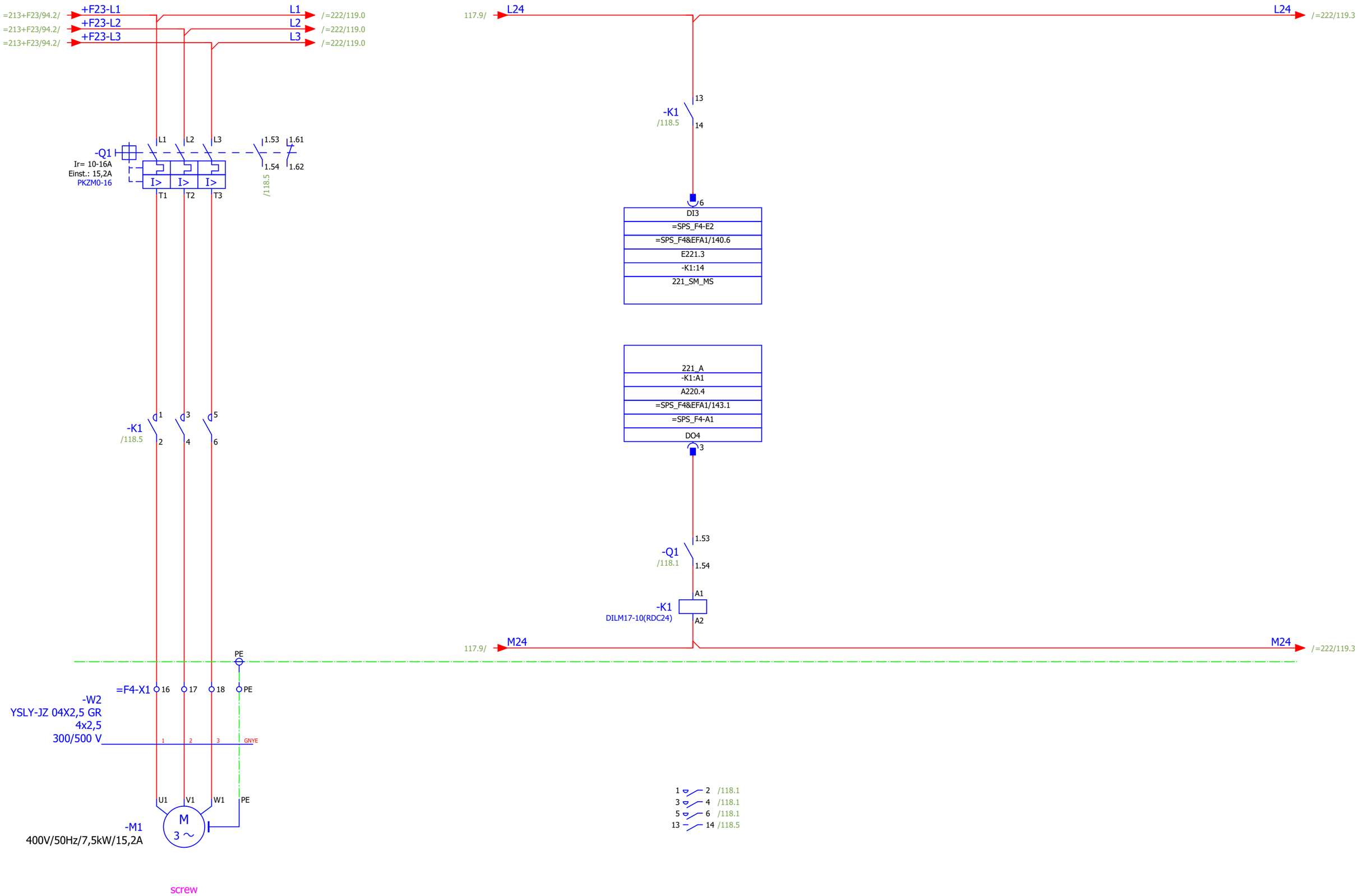

117

+F27/333

			Date	12.12.2019	Mixed feed plant Golden Poultry	BEYTEC ... your gateway to success	load circuit screw	= 221	
			Ed.	willen				+ F24	
			Appr		Field 4			1 : 1 Part II	Page 118
Modification	Date	Name	Original	V:\EPLAN\Projekte\Company\Replace\Beytec\2018\Feed Mill Alssad.elk	Replaced by				Page 605

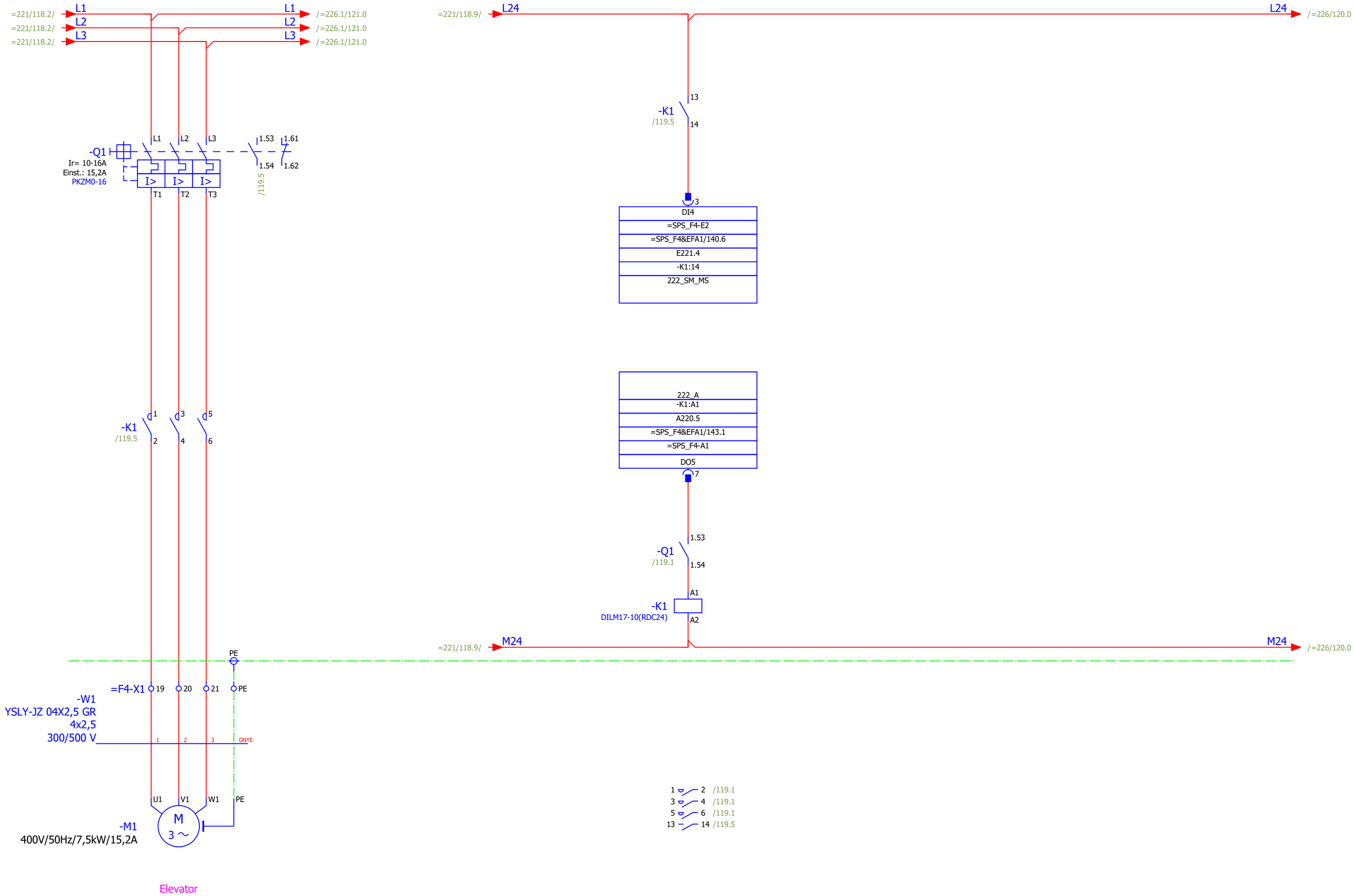

Elevator

=221+F27/334

+F27/335

			Date	12.12.2019	Mixed feed plant Golden Poultry	BEYTEC	load circuit elevator		= 222		
			Ed.	willen					+ F24		
			Appr		Field 4	... your gateway to success		1 : 1	Part II	Page	119
Modification	Date	Name	Original	V:\EPLAN\Projekte\Company\Beytec\2018\Feed Mill Alssad.elk	Replaced by					Page	605

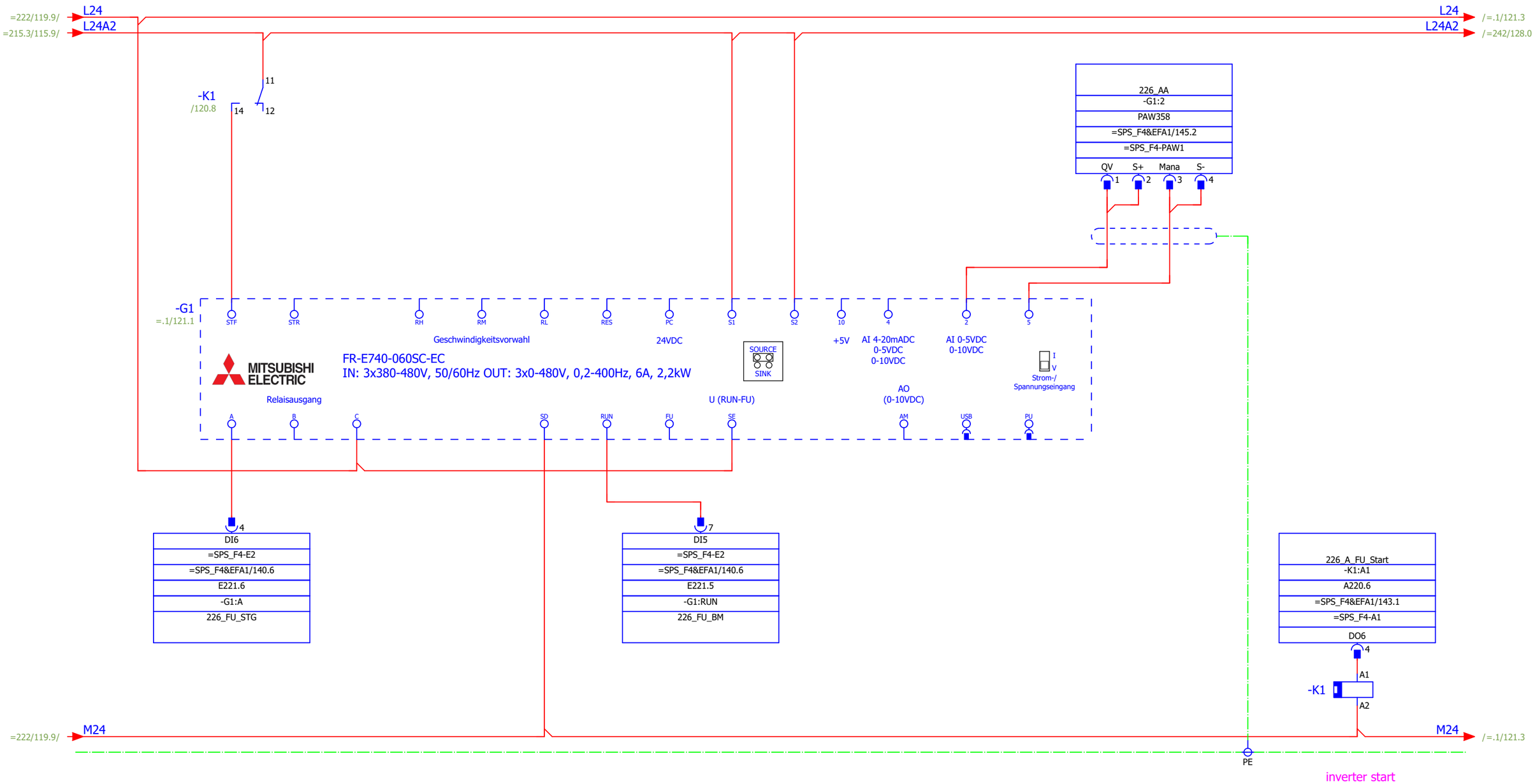

Parameter settings		
P1	=	50Hz
P7	=	5s
P8	=	5s
P73	=	0
P80	=	1,5kW
P125	=	50Hz
P192	=	99

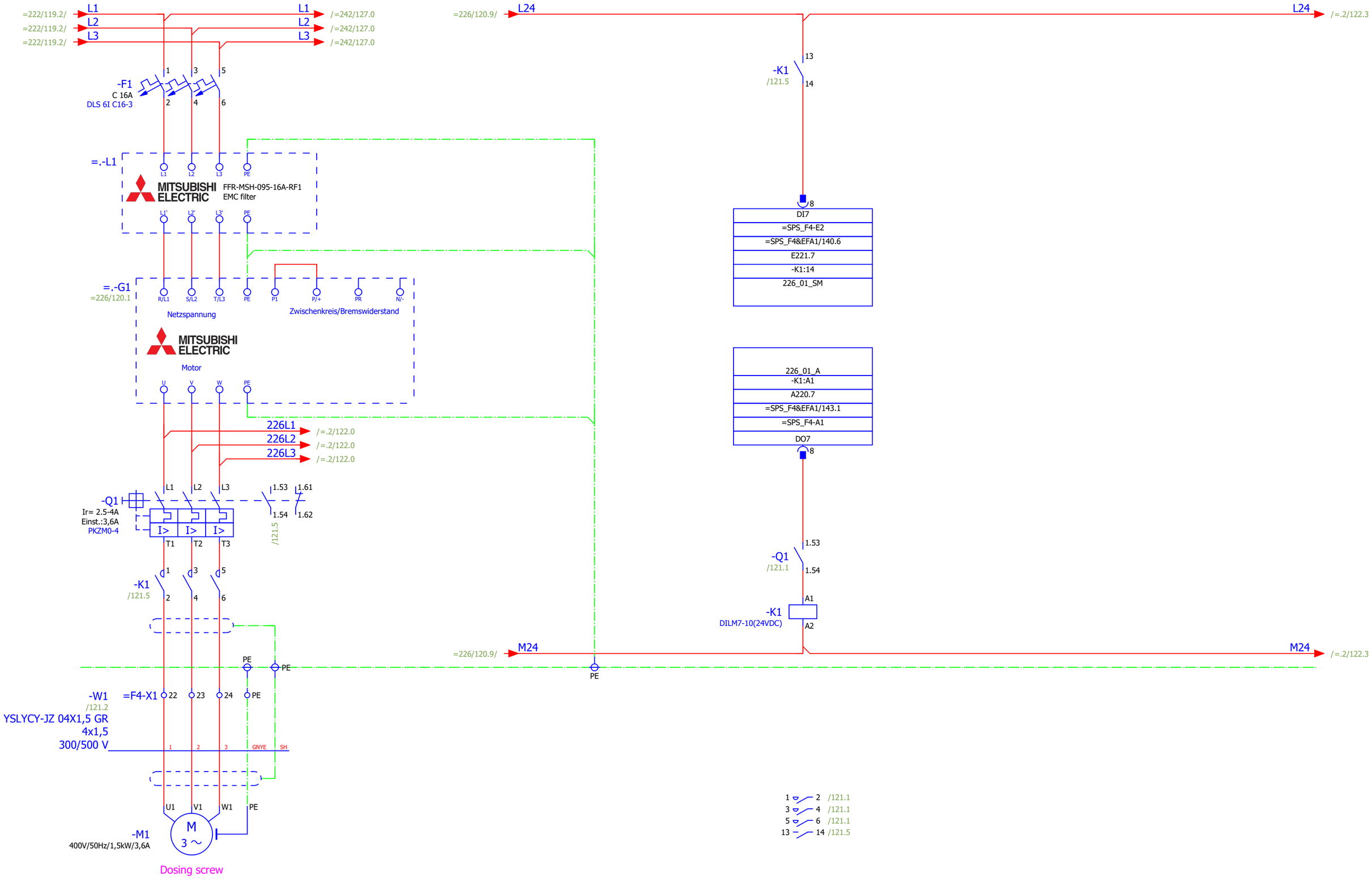

=226/120

=.2/122

			Date	12.12.2019	Mixed feed plant Golden Poultry	BEYTEC ... your gateway to success	Dosing screw	= 226.1	
			Ed.	willen				+ F24	
			Appr		Field 4			1 : 1 / Part II	Page 121
Modification	Date	Name	Original	V:\EPLAN\Projekte\Company\Beytec\2018\Feed Mill Alssad.elk	Replaced by				Page 605

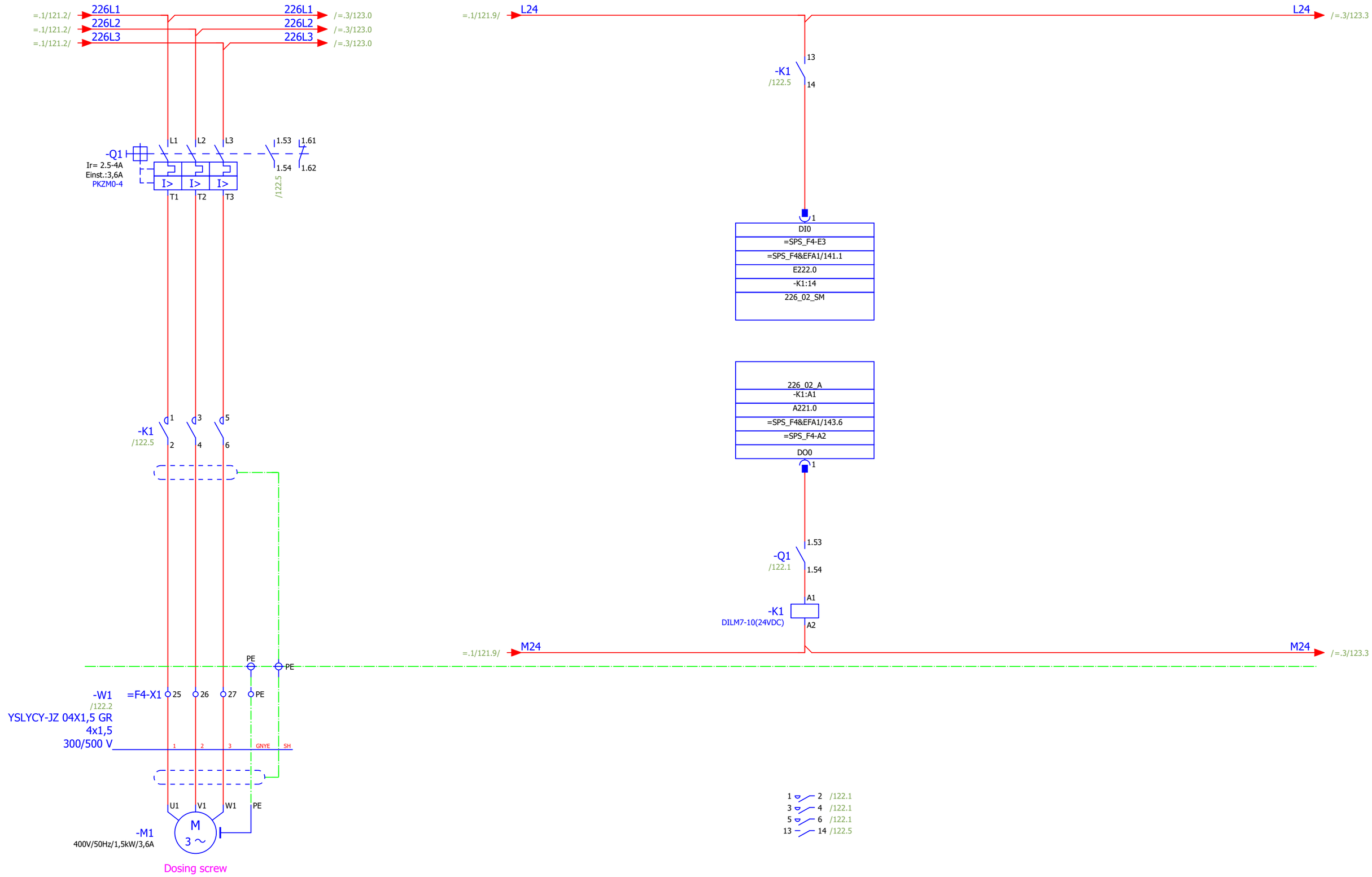

=.1/121

=.3/123

			Date	12.12.2019	Mixed feed plant Golden Poultry	BEYTEC ... your gateway to success	Dosing screw	= 226.2	
			Ed.	willen				+ F24	
			Appr		Field 4			1 : 1 / Part II	Page 122
Modification	Date	Name	Original	V:\EPLAN\Projekte\Company\Replace\Beytec\2018\Feed Mill Alssad.elk	Replaced by				Page 605

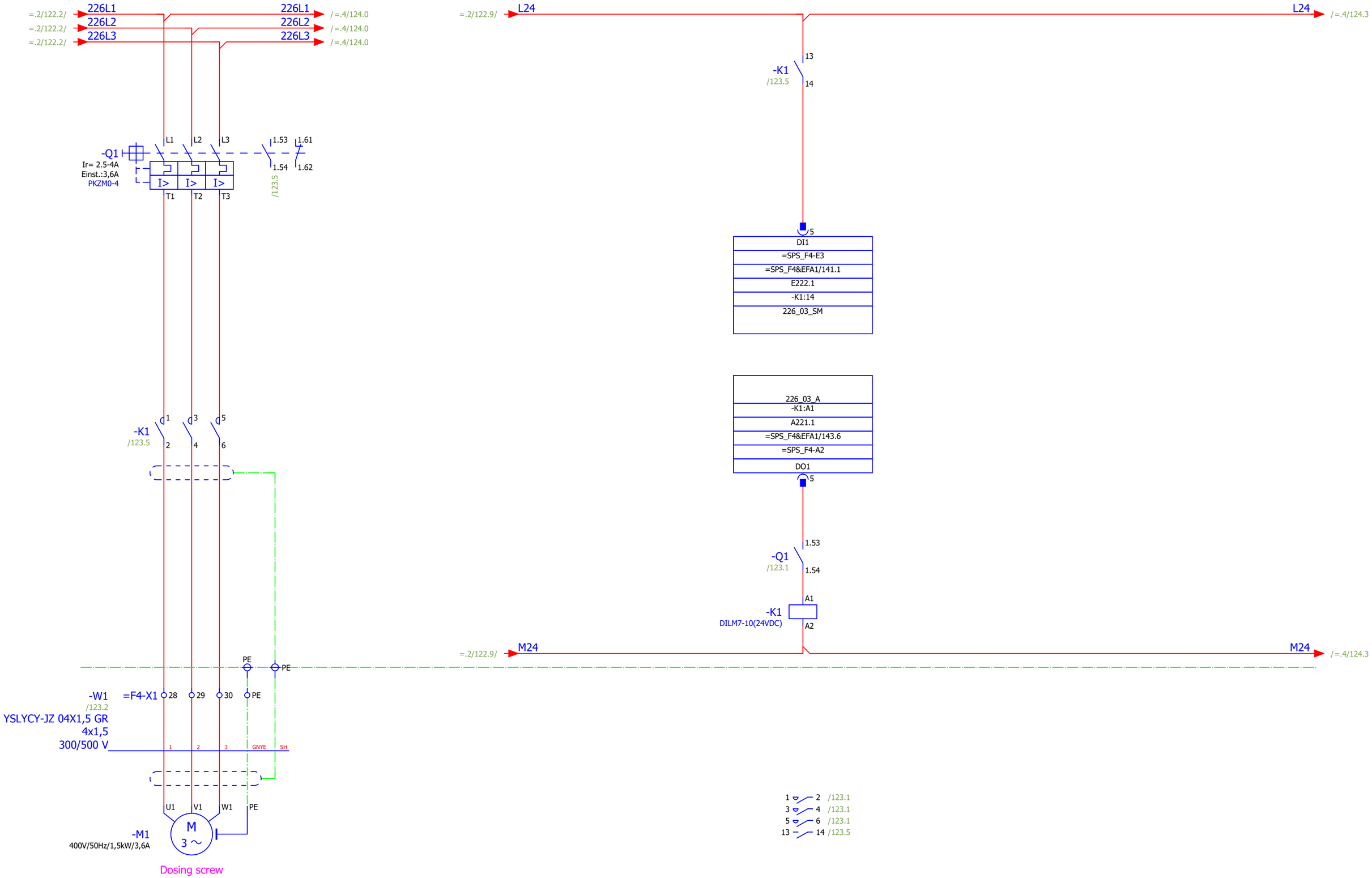

=.2/122

=.4/124

			Date	12.12.2019	Mixed feed plant Golden Poultry	BEYTEC	Dosing screw	= 226.3	
			Ed.	willen				+ F24	
			Appr		Field 4	... your gateway to success		1 : 1 / Part II	Page 123
Modification	Date	Name	Original	V:\EPLAN\Projekte\Company\Beytec\2018\Feed Mill Alssad.elk	Replaced by				Page 605

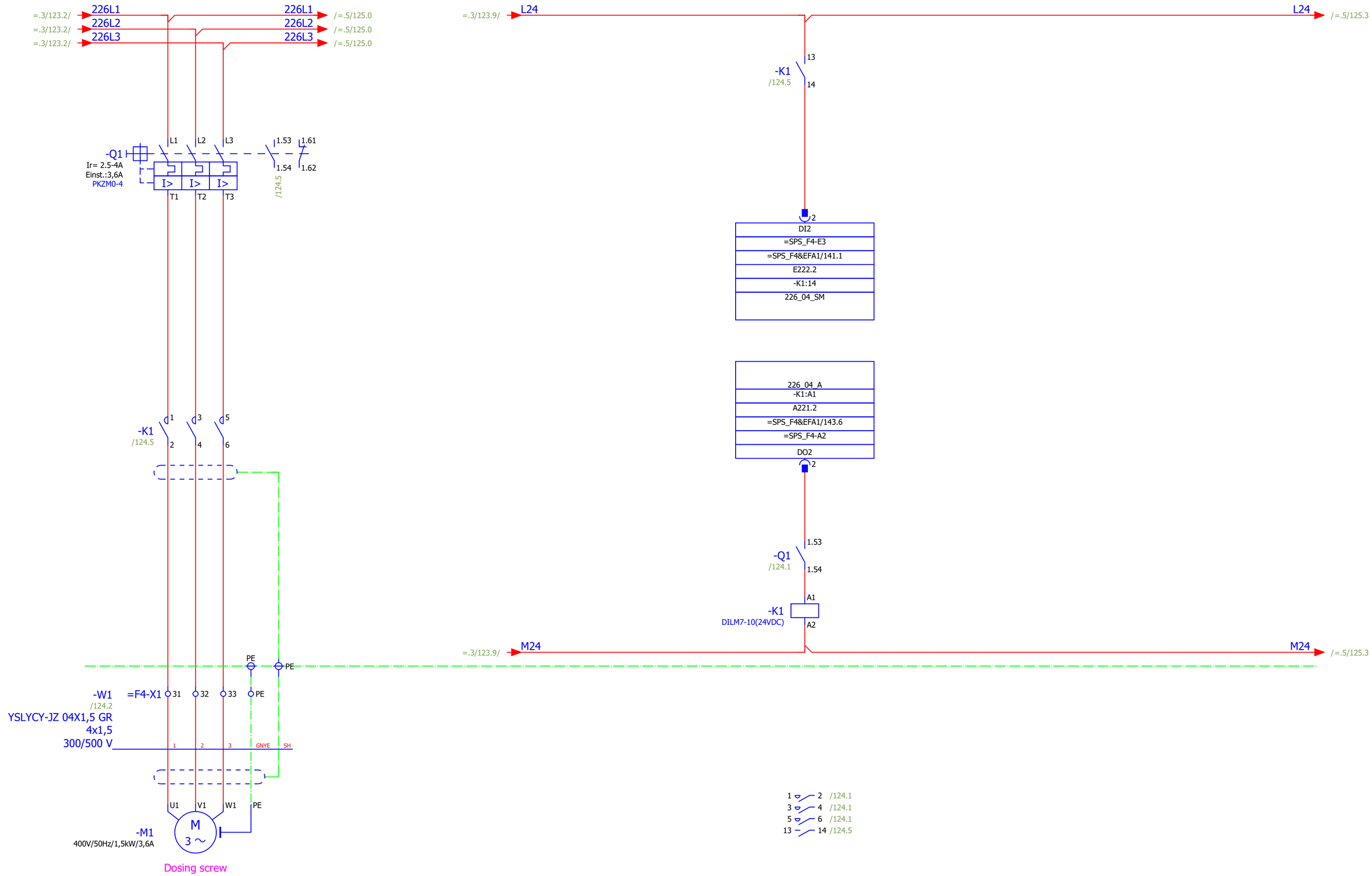

=.3/123

=.5/125

			Date	12.12.2019	Mixed feed plant Golden Poultry	BEYTEC ... your gateway to success	Dosing screw	= 226.4	
			Ed.	willen				+ F24	
			Appr		Field 4			1 : 1 Part II	Page 124
Modification	Date	Name	Original	V:\EPLAN\Projekte\Company\Replace\Beytec\2018\Feed Mill Alssad.elk	Replaced by				Page 605

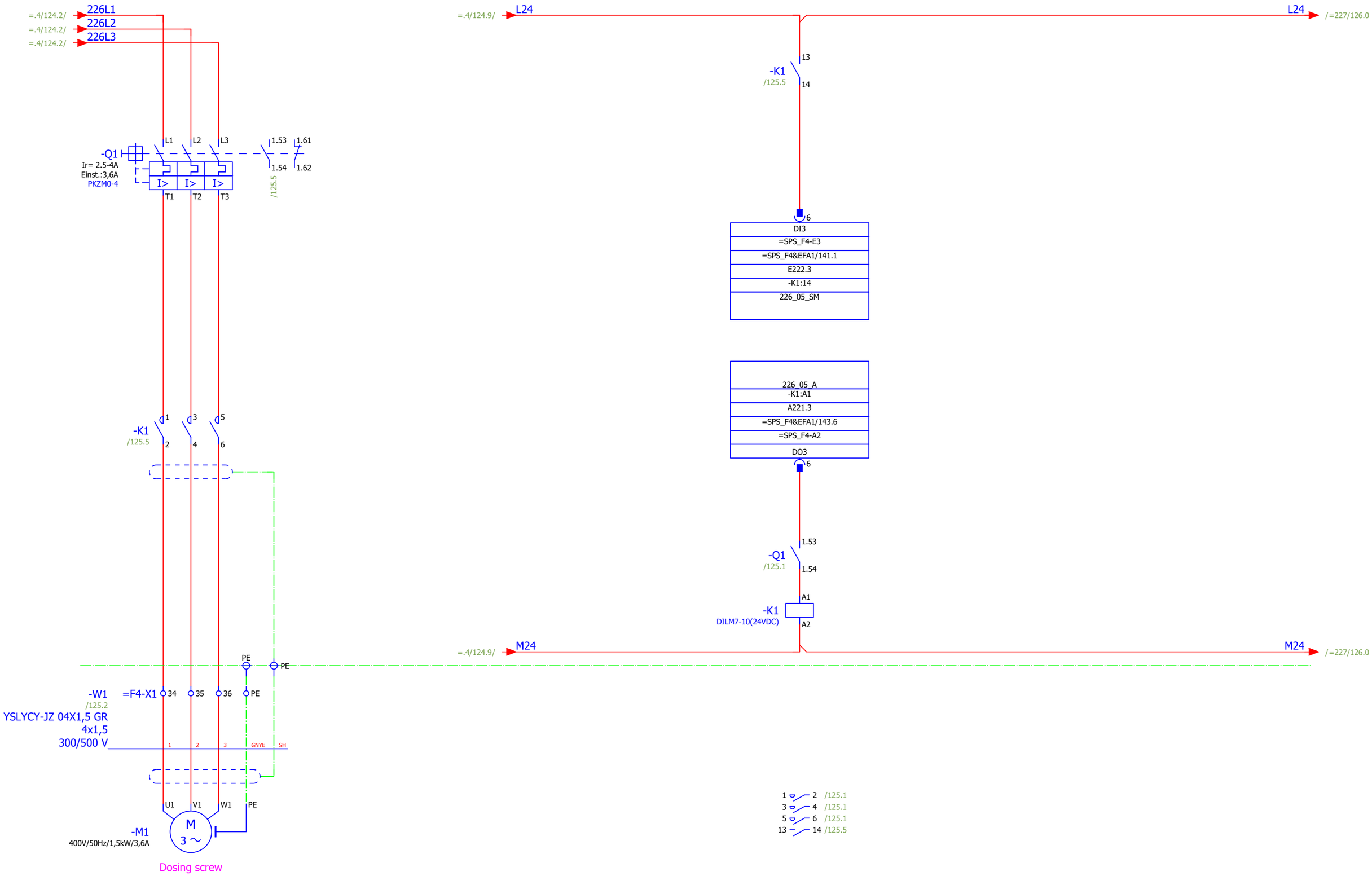

=.4/124

=227/126

			Date	12.12.2019	Mixed feed plant Golden Poultry	BEYTEC ... your gateway to success	Dosing screw	= 226.5	
			Ed.	willen				+ F24	
			Appr		Field 4			1 : 1 / Part II	Page 125
Modification	Date	Name	Original	V:\EPLAN\Projekte\Company\Replace\Beytec\2018\Feed Mill Alssad.elk	Replaced by				Page 605

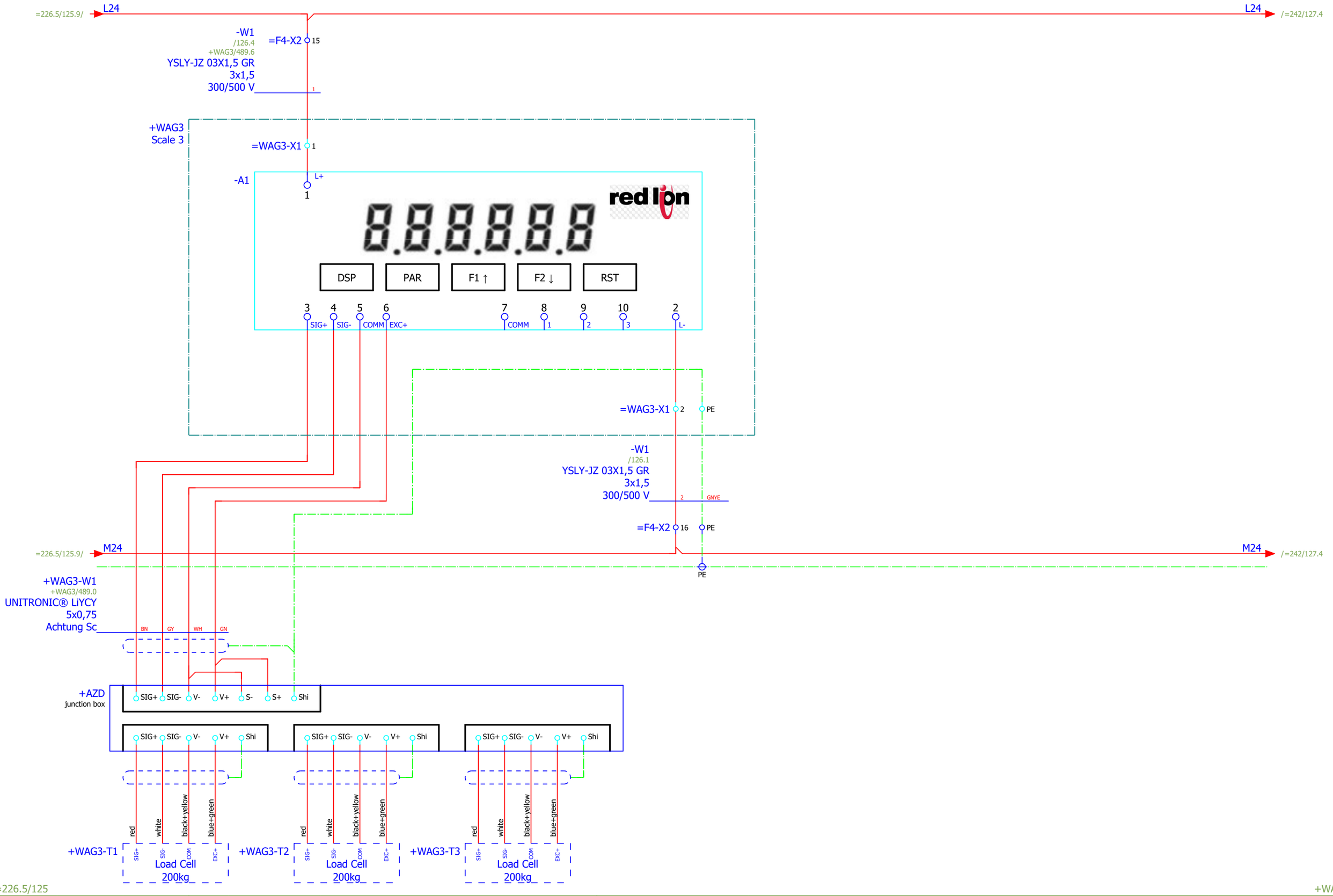

			Date	12.12.2019	Mixed feed plant Golden Poultry	BEYTEC ... your gateway to success	Dosing scale 3	= 227	
			Ed.	willen				+ F24	
			Appr		Field 4		1 : 1	Part II	Page 126
Modification	Date	Name	Original	V:\EPLAN\Projekte\Company\Beytec\2018\Feed Mill Alssad.elk	Replaced by				Page 605

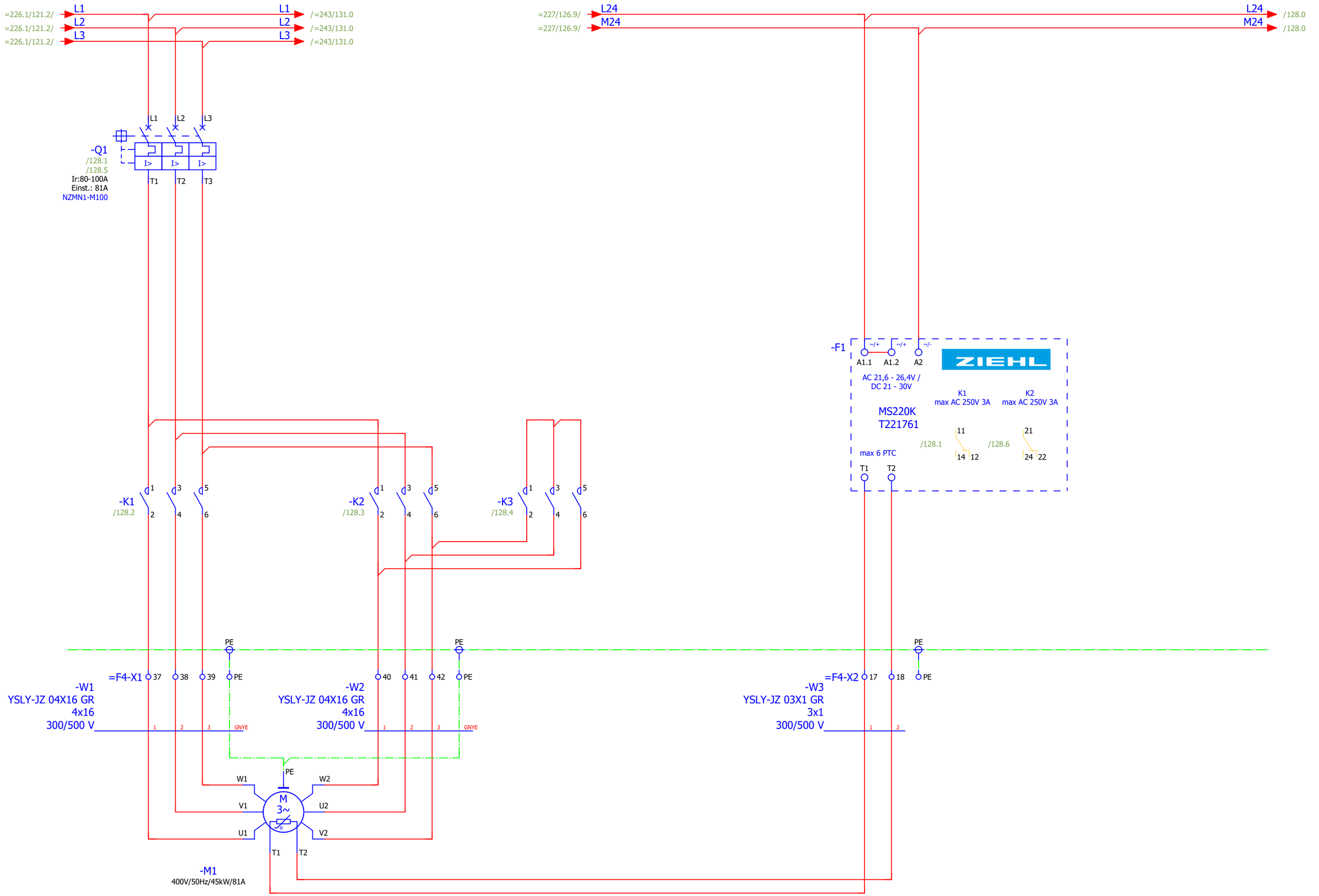
=226.1/121.2/
L1
L2
L3
/=243/131.0
=227/126.9/
L24
M24
/128.0
-Q1
/128.1
/128.5
Ir:80-100A
Einst.: 81A
NZMN1-M100
I>
T1
T2
T3
-K1
/128.2
-K2
/128.3
-K3
/128.4
-F1
~/+
~/-
A1.1
A1.2
A2
ZIEHL
AC 21,6 - 26,4V /
DC 21 - 30V
K1
max AC 250V 3A
K2
max AC 250V 3A
MS220K
T221761
/128.1
/128.6
11
14
12
21
24
22
max 6 PTC
PE
=F4-X1
37
38
39
40
41
42
=F4-X2
17
18
-W1
YSLY-JZ 04X16 GR
4x16
300/500 V
-W2
YSLY-JZ 04X16 GR
4x16
300/500 V
-W3
YSLY-JZ 03X1 GR
3x1
300/500 V
GNYE
W1
W2
V1
U2
U1
V2
M
3~
-M1
400V/50Hz/45kW/81A

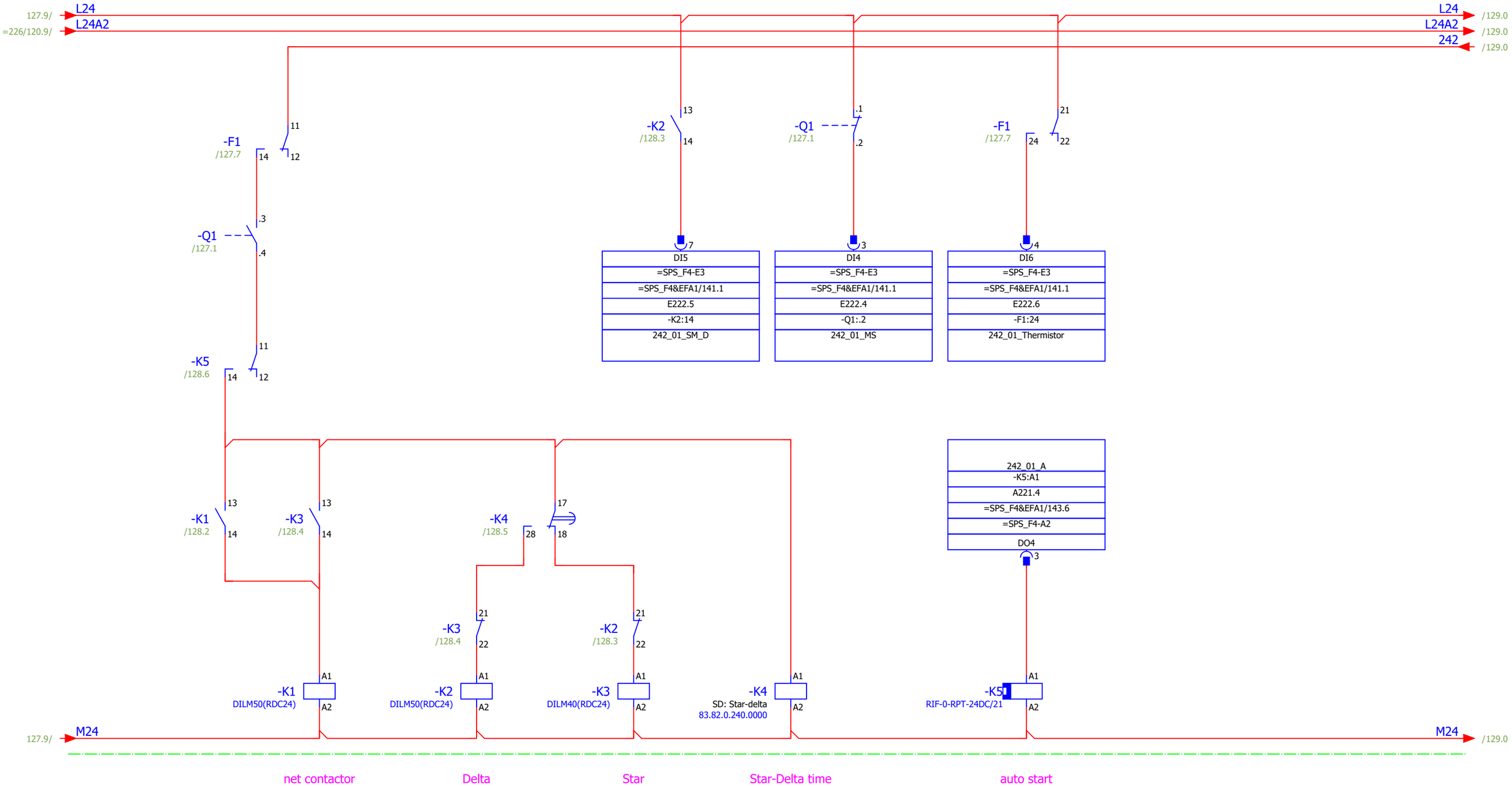

1 2 /127.1
3 4 /127.1
5 6 /127.1
13 14 /128.1
21 22
33 34
43 44

1 2 /127.2
3 4 /127.3
5 6 /127.3
13 14 /128.4
21 22 /128.4

1 2 /127.4
3 4 /127.4
5 6 /127.4
13 14 /128.2
21 22 /128.3
33 34
43 44

28
18 17 /128.3

14
12 11 /128.1

			Date	12.12.2019	Mixed feed plant Golden Poultry	BEYTEC ... your gateway to success	control circuit mixer	= 242	
			Ed.	willen				+ F24	
			Appr		Field 4			1 : 1 Part II	Page 128
Modification	Date	Name	Original	V:\EPLAN\Projekte\Company\Beytec\2018\Feed Mill Alssad.elk	Replaced by				Page 605

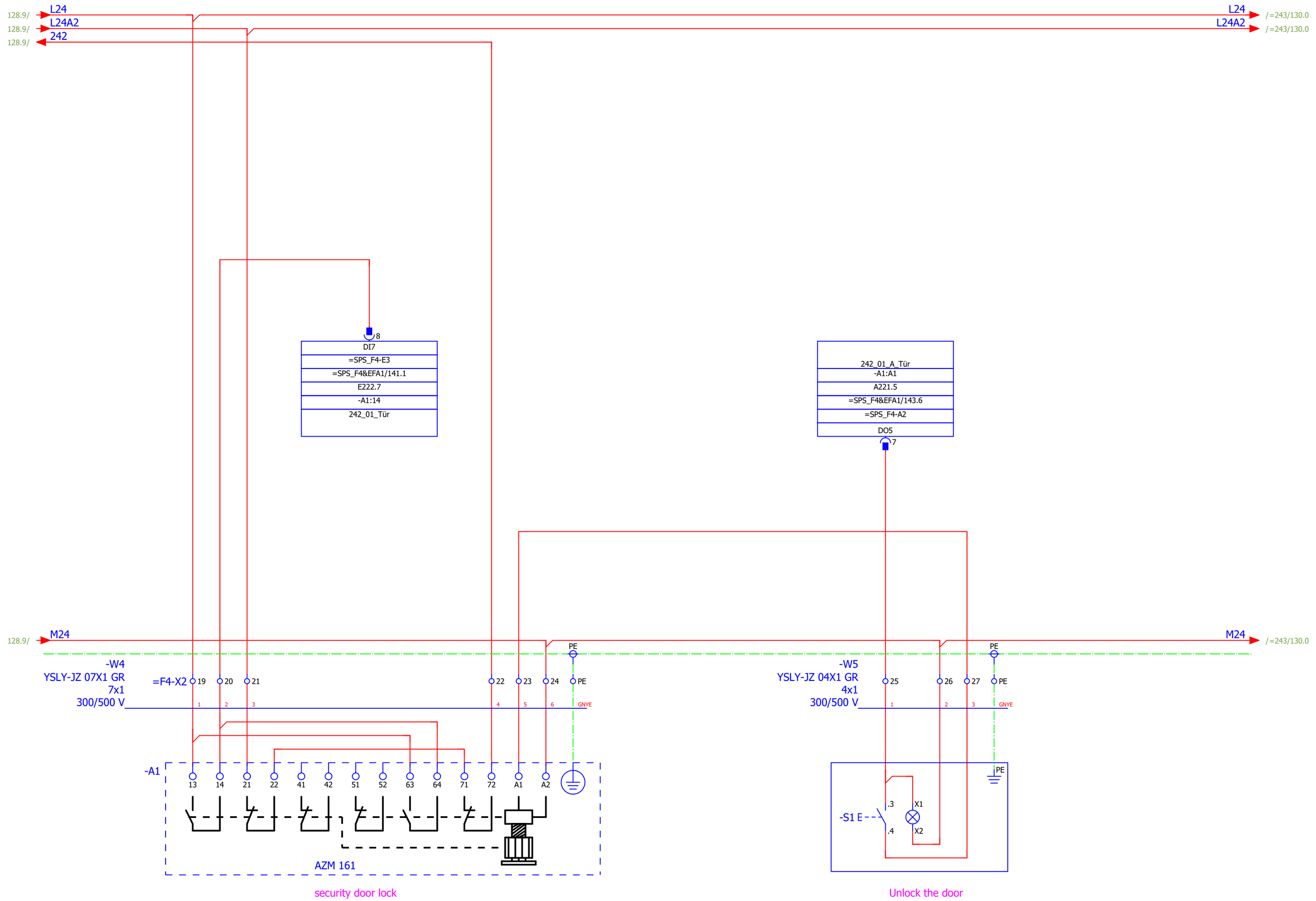

			Date	12.12.2019	Mixed feed plant Golden Poultry	BEYTEC ... your gateway to success	saftey circuit mixer	= 242	
			Ed.	willen				+ F24	
			Appr		Field 4			1 : 1 / Part II	Page 129
Modification	Date	Name	Original	V:\EPLAN\Projekte\Company\Replace\Beytec\2018\Feed Mill Alssad.elk	Replaced by				Page 605

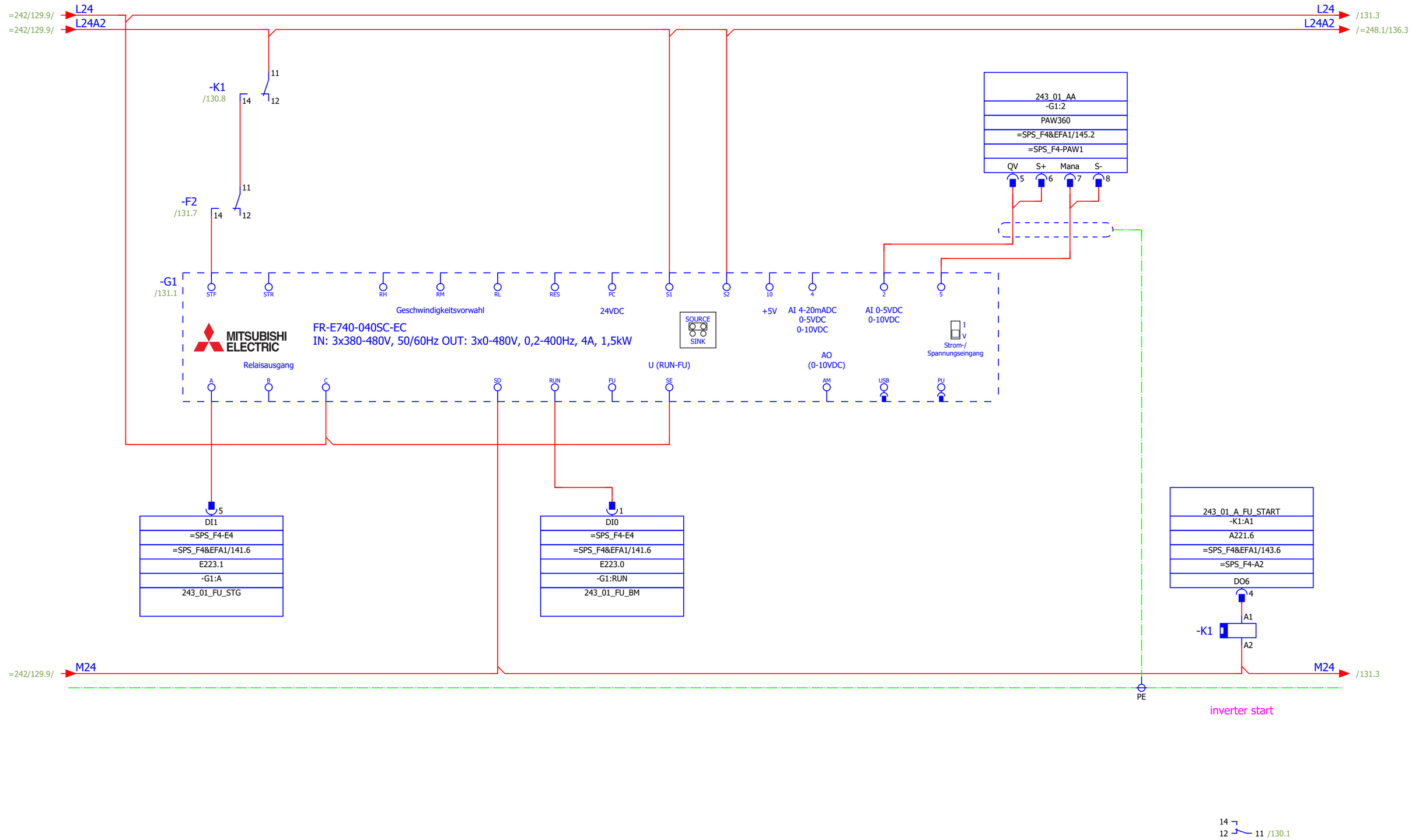

=242+F27/358

131

			Date	12.12.2019	Mixed feed plant Golden Poultry	BEYTEC ... your gateway to success	Ansteuerung Pumpe Öldosierung	= 243	
			Ed.	willen	Field 4			+ F24	
			Appr				1 : 1	Part II	Page 130
Modification	Date	Name	Original	V:\EPLAN\Projekte\Company\Beytec\2018\Feed Mill Alssad.elk	Replaced by				Page 605

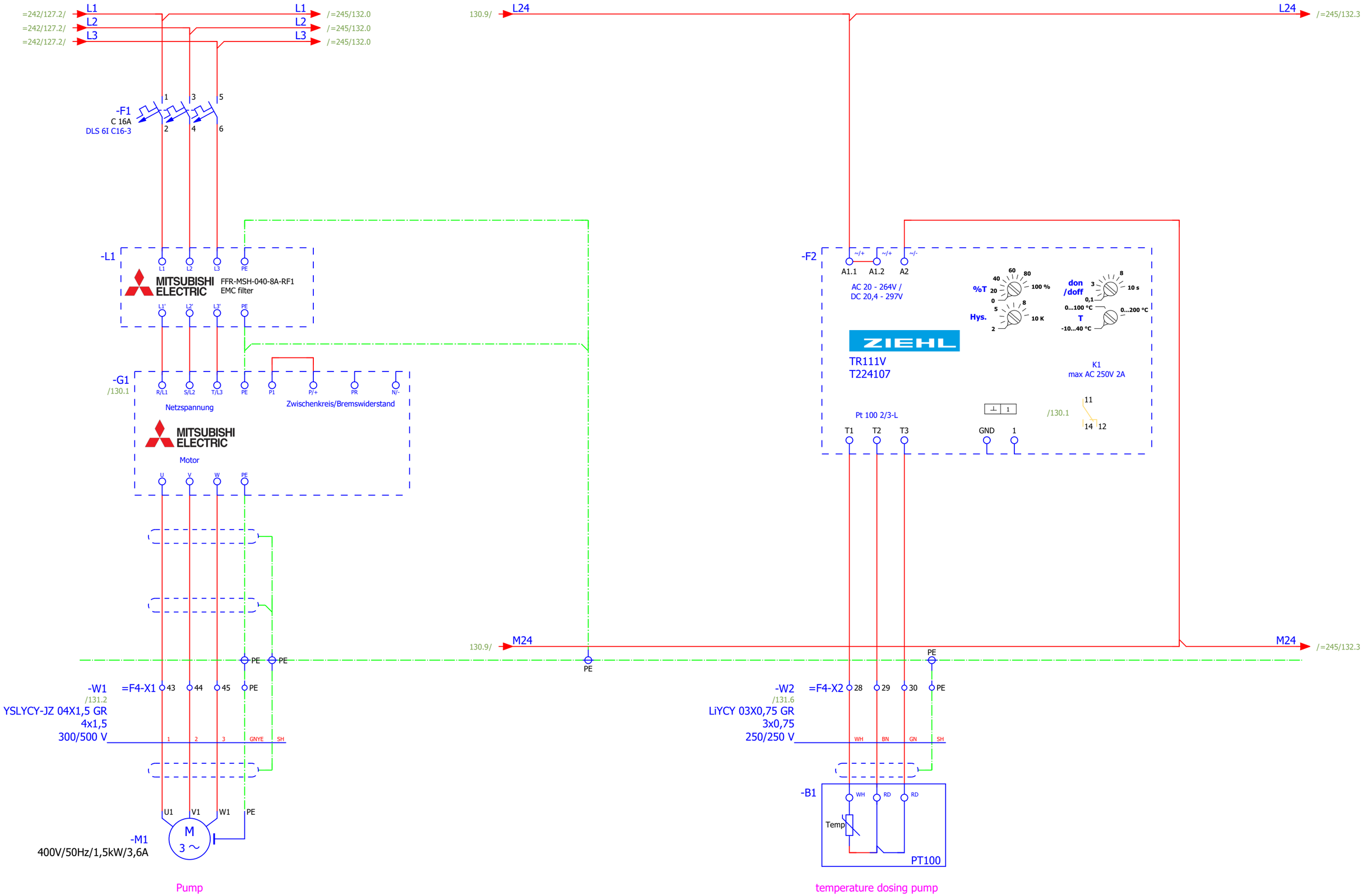

			Date	12.12.2019	Mixed feed plant Golden Poultry	BEYTEC ... your gateway to success	load circuit pump oil metering	= 243
			Ed.	willen	Field 4			+ F24
			Appr				1 : 1	Part II
Modification	Date	Name	Original	V:\EPLAN\Projekte\Company\Beytec\2018\Feed Mill Alssad.elk	Replaced by			Page 131 / Page 605

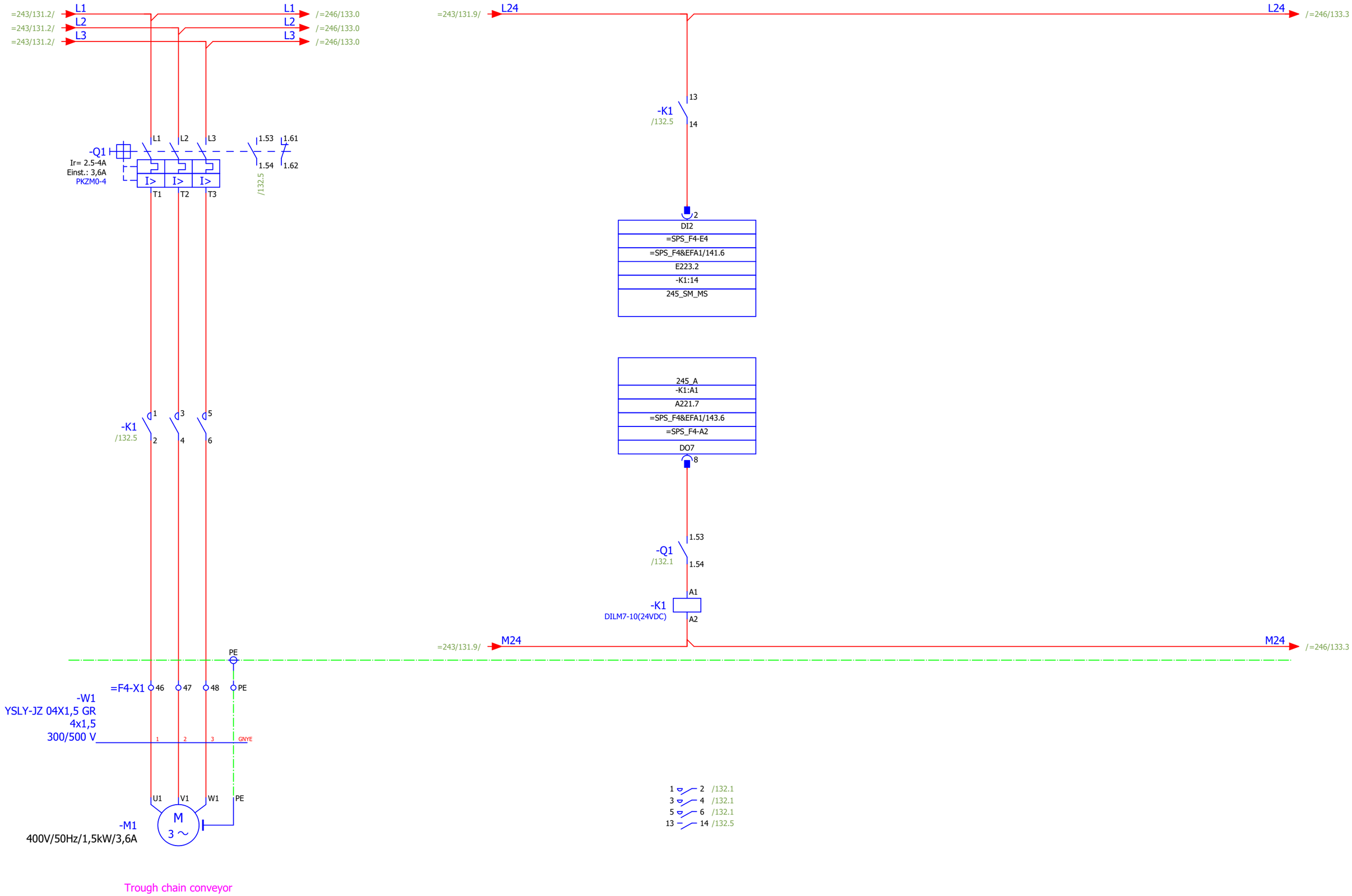

Trough chain conveyor

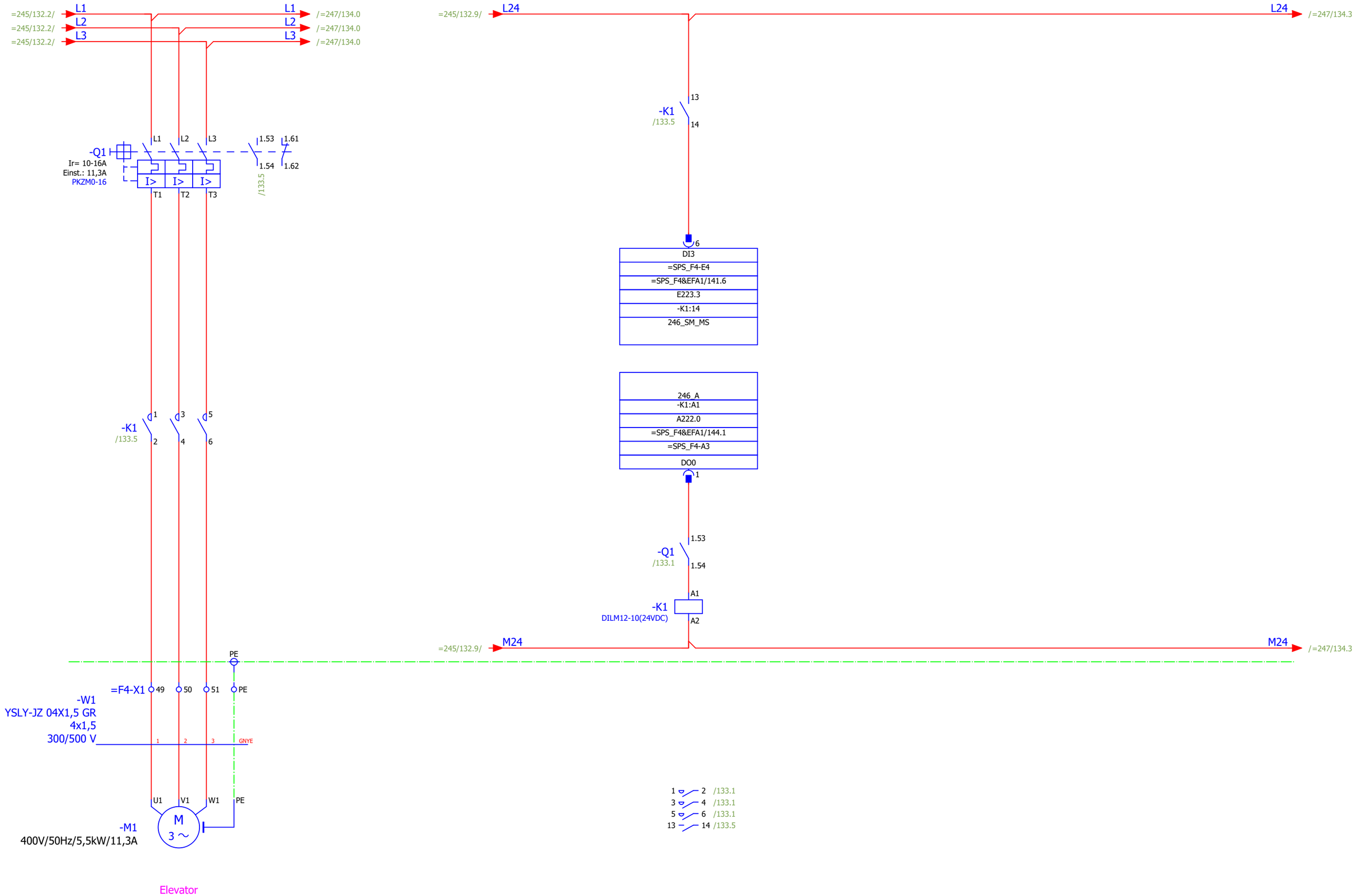

Elevator

=245+F27/365

+F27/366

			Date	12.12.2019	Mixed feed plant Golden Poultry	BEYTEC ... your gateway to success	load circuit elevator	= 246	
			Ed.	willen	Field 4			+ F24	
			Appr				1 : 1	Part II	Page 133
Modification	Date	Name	Original	V:\EPLAN\Projekte\Company\Beytec\2018\Feed Mill Alssad.elk	Replaced by				Page 605

Replaced by

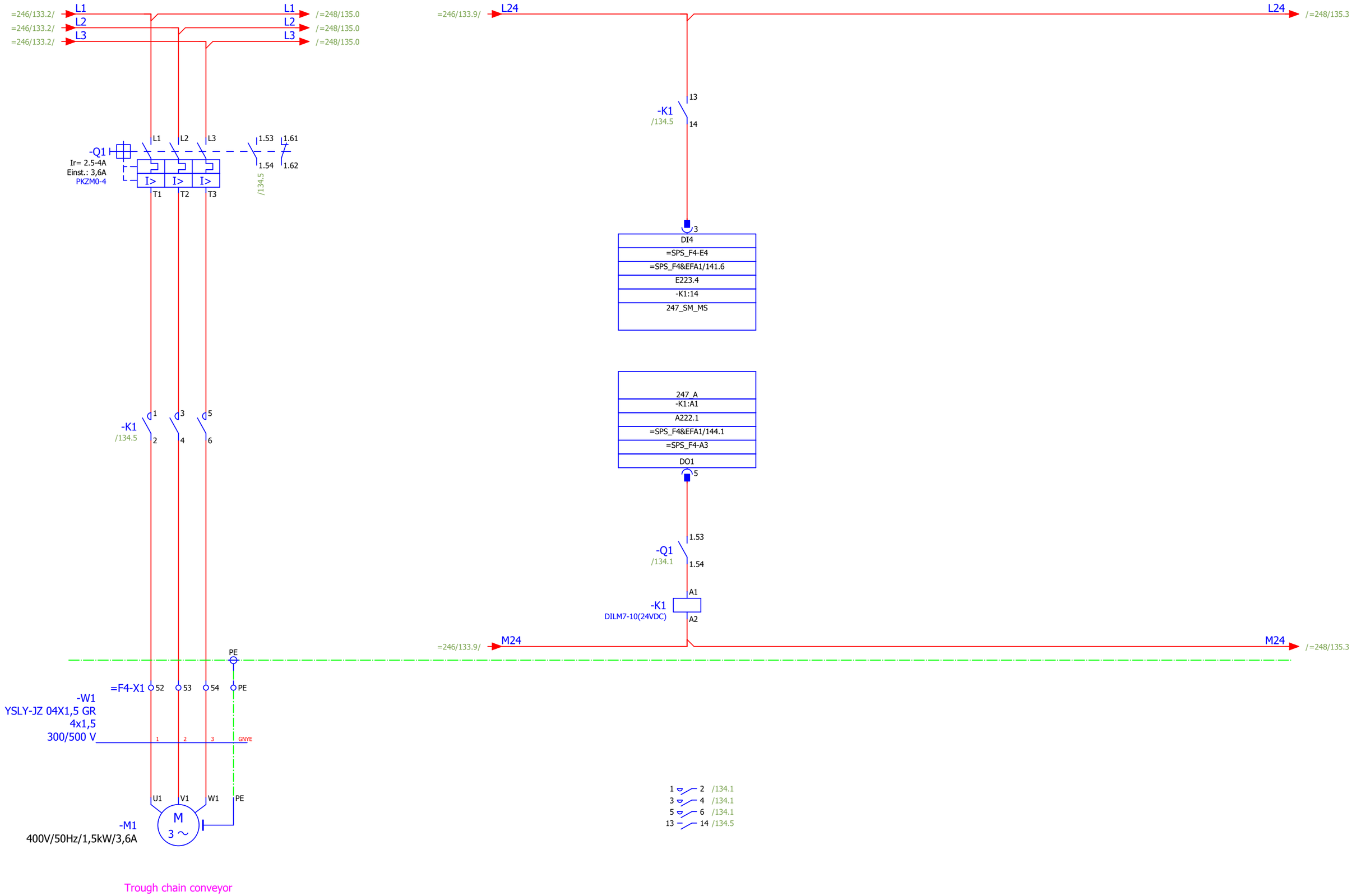

Trough chain conveyor

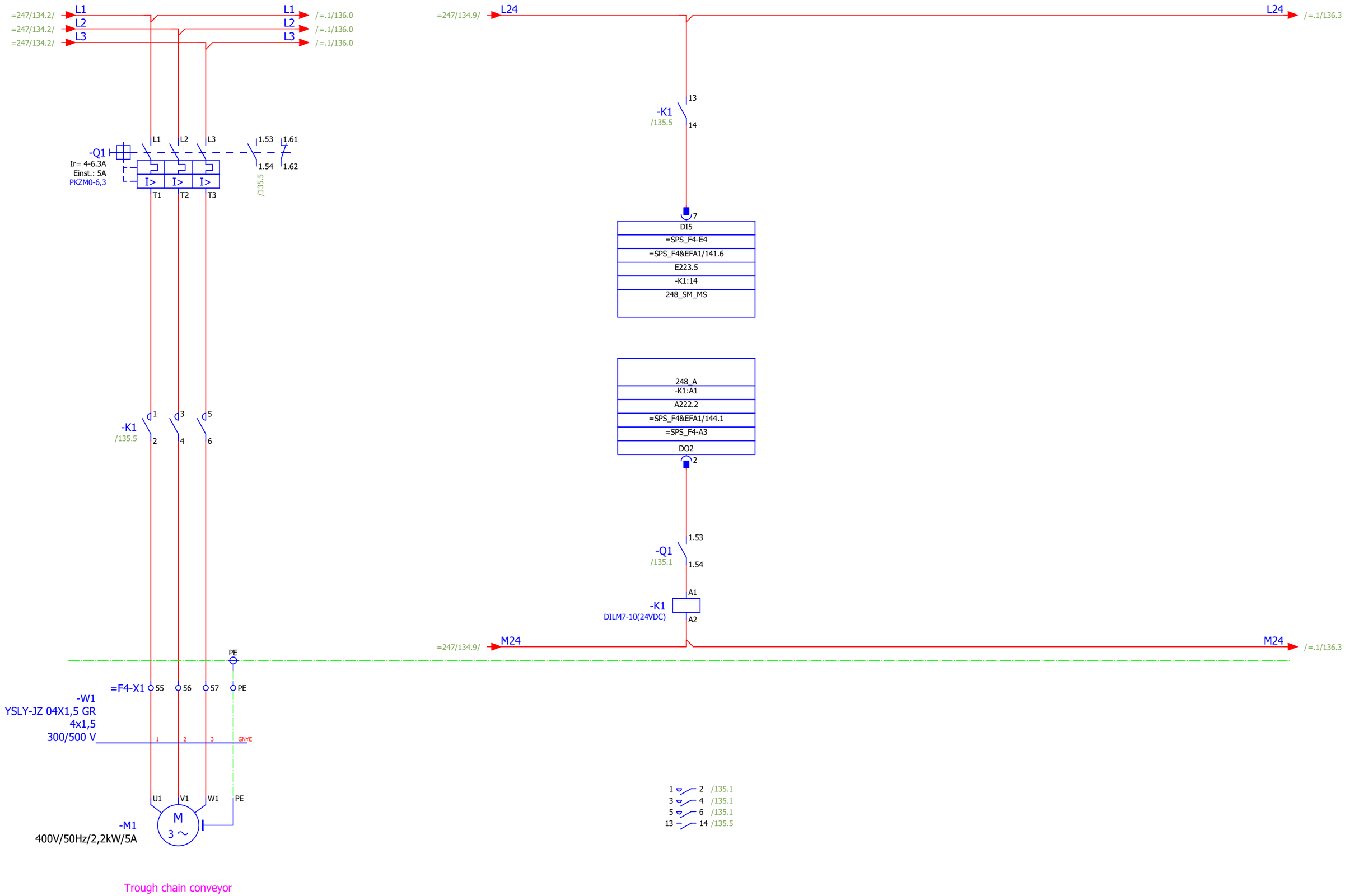

Trough chain conveyor

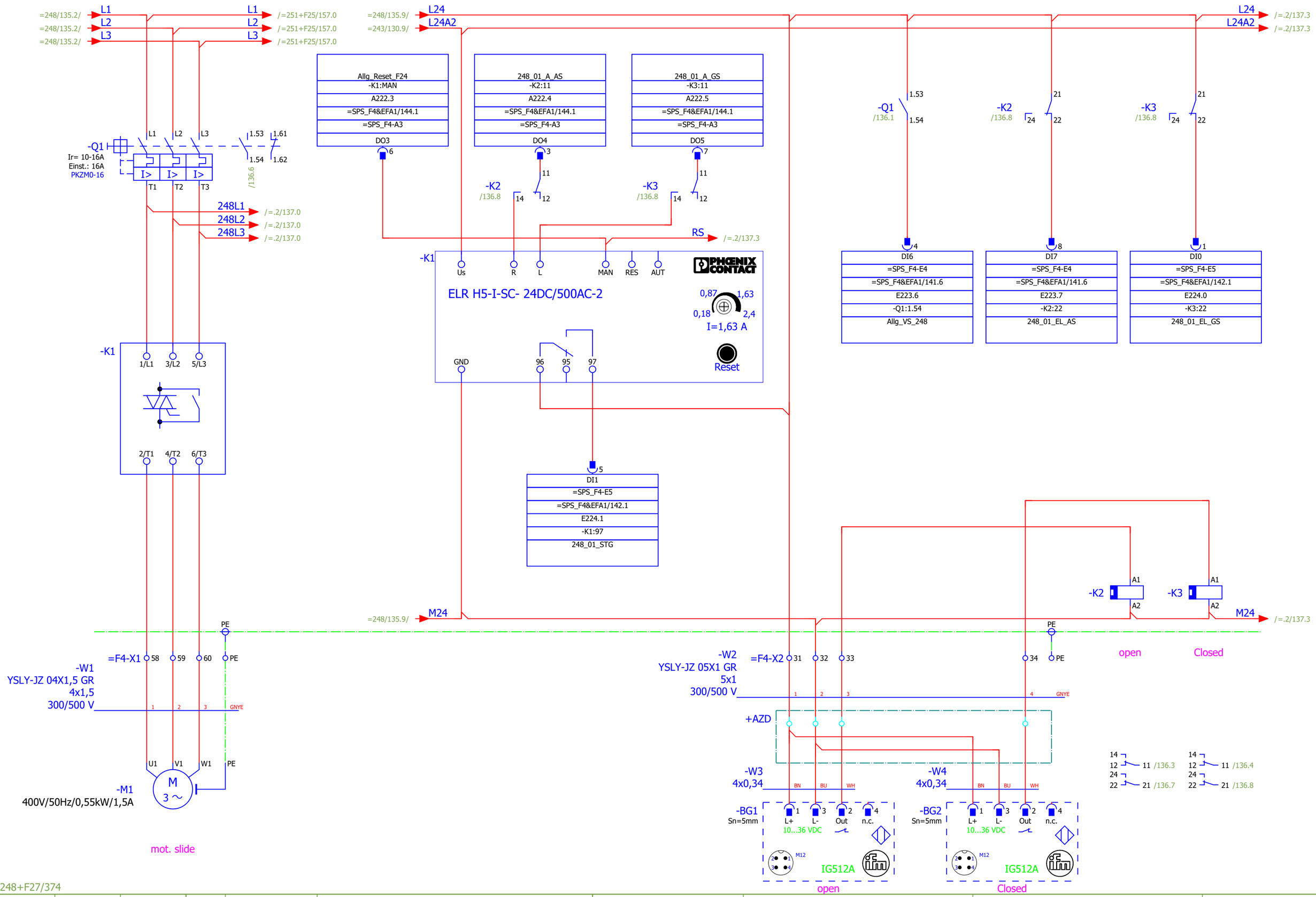

			Date	12.12.2019	Mixed feed plant Golden Poultry	BEYTEC ... your gateway to success	mot. slide	= 248.1	
			Ed.	willen				+ F24	
			Appr		Field 4			1 : 1 / Part II	Page 136
Modification	Date	Name	Original	V:\EPLAN\Projekte\Company\Replace\Beytec\2018\Feed Mill Alssad.elk	Replaced by				Page 605

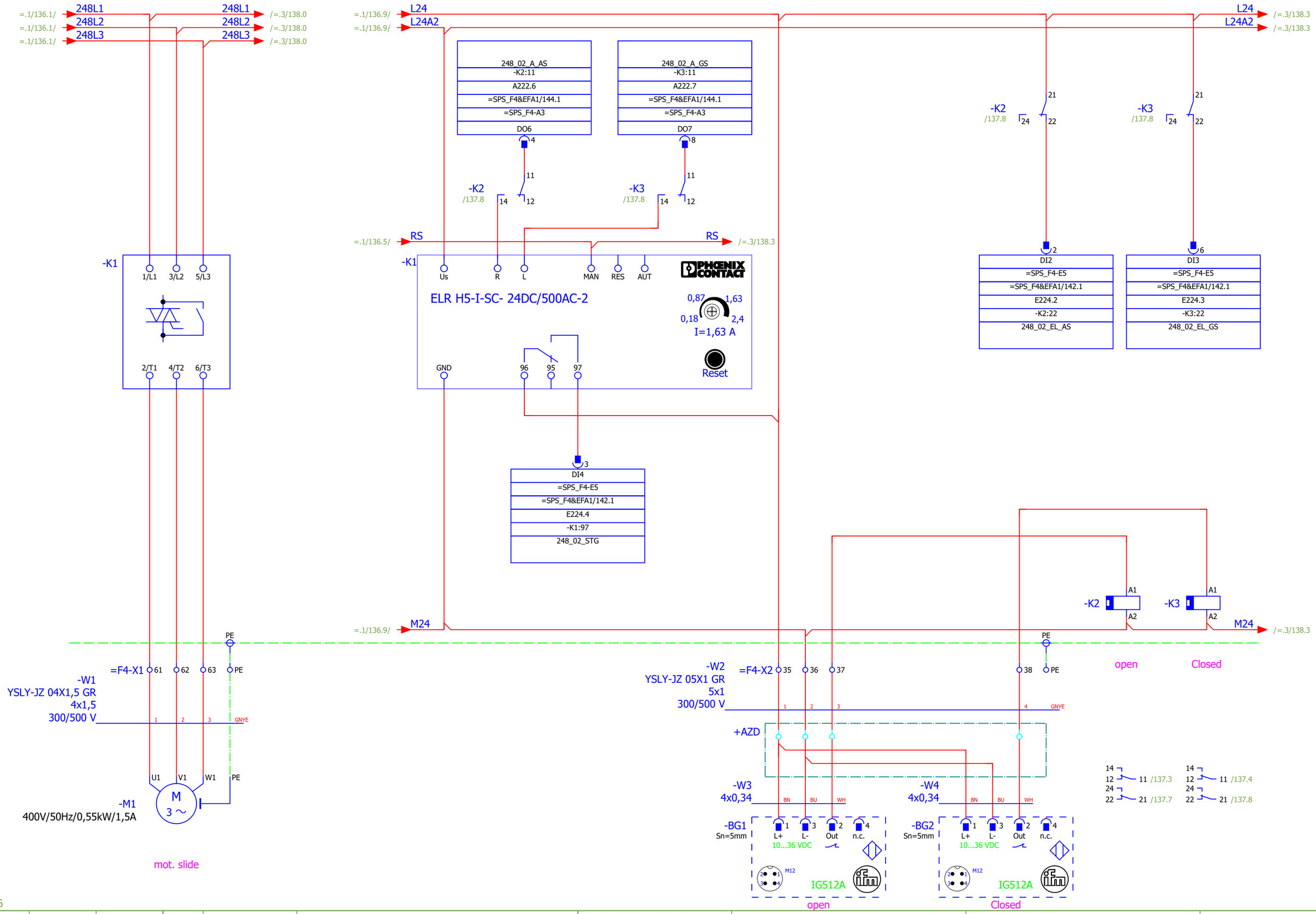

			Date	12.12.2019	Mixed feed plant Golden Poultry	BEYTEC ... your gateway to success	mot. slide
			Ed.	willen	Field 4		
			Appr				
Modification	Date	Name	Original	V:\EPLAN\Projekte\Company\Beytec\2018\Feed Mill Alssad.elk	Replaced by		

= 248.2
+ F24
1 : 1
Part II
Page 137
Page 605

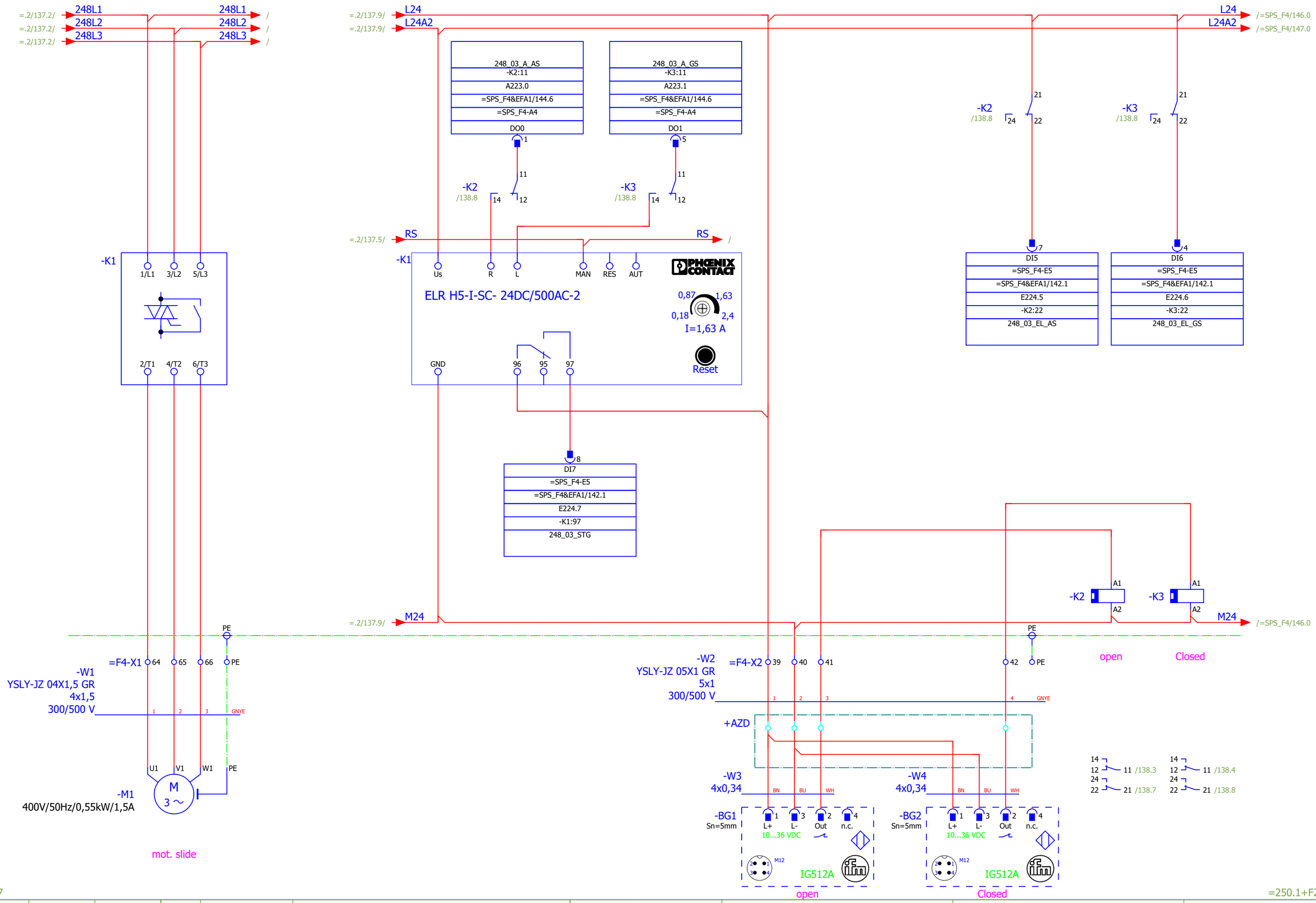

=.2/137

=250.1+F27/375

			Date	12.12.2019	Mixed feed plant Golden Poultry	BEYTEC ... your gateway to success	mot. slide	= 248.3	
			Ed.	willen	Field 4			+ F24	
			Appr				1 : 1	Part II	Page 138
Modification	Date	Name	Original	V:\EPLAN\Projekte\Company\Beytec\2018\Feed Mill Alssad.elk	Replaced by				Page 605

-K1
&ETC/148.2

ET200S SIEMENS
IM 151-1 STANDARD

-X1: DP &EFS/146.6

-X20:1 1L+ &EFS/146.3
-X20:2 2L+ &EFS/146.4
-X20:3 1M &EFS/146.5
-X20:4 2M &EFS/146.6

6ES7151-1AA06-0AB0

-K2
&ETC/148.3

ET200S SIEMENS
PM-E DC 24V

2 DC24V &EFS/147.1
3 M &EFS/147.1
A4 AUX1 &EFS/147.4

6 DC24V &EFS/147.2
7 M &EFS/147.2
A8 AUX1 &EFS/147.4

6ES7138-4CA01-0AA0
+ TM-P15C23-A0

-K3
&ETC/148.6

ET200S SIEMENS
PM-E DC 24V

2 DC24V &EFS/147.5
3 M &EFS/147.6
A4 AUX1 &EFS/147.8

6 DC24V &EFS/147.6
7 M &EFS/147.7
A8 AUX1 &EFS/147.8

6ES7138-4CA01-0AA0
+ TM-P15C23-A0

-E1
&ETC/148.3

ET200S SIEMENS
8 DI DC 24 S

E220.0	1 DI0	=215&EFS/110=5215+EXT-S1:12	Allg_215_NA_T
E220.2	2 DI2	=215.1&EFS/11=2215.1-K2:14	215_01_SM_D
E220.4	3 DI4	=215.2&EFS/11=4215.2-Q1:1.62	215_02_MS
E220.6	4 DI6	=215.2&EFS/11=6215.2-F1:24	215_02_Thermistor
E220.1	5 DI1	=215.1&EFS/11=1215.1-Q1:1.62	215_01_MS
E220.3	6 DI3	=215.1&EFS/11=3215.1-F1:24	215_01_Thermistor
E220.5	7 DI5	=215.2&EFS/11=5215.2-K2:14	215_02_SM_D
E220.7	8 DI7	=215.3&EFS/11=7215.3-K1:14	215_03_STG

6ES7131-4BF00-0AA0
+ TM-E15C24-01

-E2
&ETC/148.4

ET200S SIEMENS
8 DI DC 24 V

E221.0	1 DI0	=215.3&EFS/11=5215.3-T1:R2A	215_03_FU_BM
E221.2	2 DI2	=221&EFS/117=5221+EXT-S1:12	Allg_221_NA_T
E221.4	3 DI4	=222&EFS/119=5222-K1:14	222_SM_MS
E221.6	4 DI6	=226&EFS/120=1226-G1:A	226_FU_STG
E221.1	5 DI1	=215.3&EFS/11=5215.3-T1:R1A	215_03_FU_STG
E221.3	6 DI3	=221&EFS/118=5221-K1:14	221_SM_MS
E221.5	7 DI5	=226&EFS/120=4226-G1:RUN	226_FU_BM
E221.7	8 DI7	=226.1&EFS/12=2226.1-K1:14	226_01_SM

6ES7131-4BF00-0AA0
+ TM-E15C24-01

			Date	12.12.2019	Mixed feed plant Golden Poultry	BEYTEC ... your gateway to success	overview inputs	= SPS_F4
			Ed.	willen	Field 4			+ F24
			Appr				1 : 1	Part II	Page 140
Modification	Date	Name	Original	V:\EPLAN\Projekte\Company\Beytec\2018\Feed Mill Alssad.elk	Replaced by			Page 605

-E3
&ETC/148.4

ET200S SIEMENS
8 DI DC 24 V

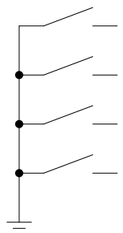

E222.0	1 DI0	=226.2&EFS/122=226.2-K1:14	226_02_SM
E222.2	2 DI2	=226.4&EFS/124=226.4-K1:14	226_04_SM
E222.4	3 DI4	=242&EFS/128=242-Q1:.2	242_01_MS
E222.6	4 DI6	=242&EFS/128=242-F1:24	242_01_Thermistor

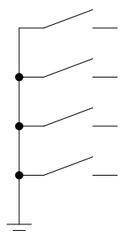

E222.1	5 DI1	=226.3&EFS/123=226.3-K1:14	226_03_SM
E222.3	6 DI3	=226.5&EFS/125=226.5-K1:14	226_05_SM
E222.5	7 DI5	=242&EFS/128=242-K2:14	242_01_SM_D
E222.7	8 DI7	=242&EFS/129=242-A1:14	242_01_Tür

6ES7131-4BF00-0AA0
+ TM-E15C24-01

-E4
&ETC/148.4

ET200S SIEMENS
8 DI DC 24 V

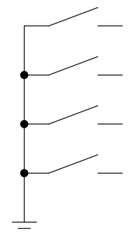

E223.0	1 DI0	=243&EFS/130=243-G1:RUN	243_01_FU_BM
E223.2	2 DI2	=245&EFS/132=245-K1:14	245_SM_MS
E223.4	3 DI4	=247&EFS/134=247-K1:14	247_SM_MS
E223.6	4 DI6	=248.1&EFS/136=248.1-Q1:1.54	Allg_VS_248

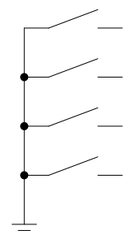

E223.1	5 DI1	=243&EFS/130=243-G1:A	243_01_FU_STG
E223.3	6 DI3	=246&EFS/133=246-K1:14	246_SM_MS
E223.5	7 DI5	=248&EFS/135=248-K1:14	248_SM_MS
E223.7	8 DI7	=248.1&EFS/136=248.1-K2:22	248_01_EL_AS

6ES7131-4BF00-0AA0
+ TM-E15C24-01

-E5
&ETC/148.5

ET200S SIEMENS
8 DI DC 24 V

E224.0	1 DI0	=248.1&EFS/1362 248.1-K3:22	248_01_EL_GS
E224.2	2 DI2	=248.2&EFS/1372 248.2-K2:22	248_02_EL_AS
E224.4	3 DI4	=248.2&EFS/1372 248.2-K1:97	248_02_STG
E224.6	4 DI6	=248.3&EFS/1382 248.3-K3:22	248_03_EL_GS

E224.1	5 DI1	=248.1&EFS/1362 248.1-K1:97	248_01_STG
E224.3	6 DI3	=248.2&EFS/1372 248.2-K3:22	248_02_EL_GS
E224.5	7 DI5	=248.3&EFS/1382 248.3-K2:22	248_03_EL_AS
E224.7	8 DI7	=248.3&EFS/1382 248.3-K1:97	248_03_STG

6ES7131-4BF00-0AA0
+ TM-E15C24-01

			Date	12.12.2019	Mixed feed plant Golden Poultry	BEYTEC ... your gateway to success	overview inputs	= SPS_F4
			Ed.	willen	Field 4			+ F24
			Appr				1 : 1	Part II	Page 142
Modification	Date	Name	Original	V:\EPLAN\Projekte\Company\Beytec\2018\Feed Mill Alssad.elk	Replaced by			Page 605

-A1
&ETC/148.6

ET200S SIEMENS
8 DO DC24V 0,5A

A220.0 1/QX.0/DO0	1 DO0	=215.1&EFS/11=215.1-K5:A1	215_01_A
A220.2 2/QX.2/DO2	2 DO2	=215.3&EFS/11=215.3-K2:A1	215_03_FG_Dosier
A220.4 3/QX.4/DO4	3 DO4	=221&EFS/118=221-K1:A1	221_A
A220.6 4/QX.6/DO6	4 DO6	=226&EFS/120=226-K1:A1	226_A_FU_Start
A220.1 5/QX.1/DO1	5 DO1	=215.2&EFS/11=215.2-K5:A1	215_02_A
A220.3 6/QX.3/DO3	6 DO3	=215.3&EFS/11=215.3-K3:A1	215_03_FG_FU
A220.5 7/QX.5/DO5	7 DO5	=222&EFS/119=222-K1:A1	222_A
A220.7 8/QX.7/DO7	8 DO7	=226.1&EFS/12=226.1-K1:A1	226_01_A

6ES7132-4BF00-0AA0
+ TM-E15C24-01

-A2
&ETC/148.6

ET200S SIEMENS
8 DO DC24V 0,5A

A221.0 1/QX.0/DO0	1 DO0	=226.2&EFS/12=226.2-K1:A1	226_02_A
A221.2 2/QX.2/DO2	2 DO2	=226.4&EFS/12=226.4-K1:A1	226_04_A
A221.4 3/QX.4/DO4	3 DO4	=242&EFS/128=242-K5:A1	242_01_A
A221.6 4/QX.6/DO6	4 DO6	=243&EFS/130=243-K1:A1	243_01_A_FU_START
A221.1 5/QX.1/DO1	5 DO1	=226.3&EFS/12=226.3-K1:A1	226_03_A
A221.3 6/QX.3/DO3	6 DO3	=226.5&EFS/12=226.5-K1:A1	226_05_A
A221.5 7/QX.5/DO5	7 DO5	=242&EFS/129=242-A1:A1	242_01_A_Tür
A221.7 8/QX.7/DO7	8 DO7	=245&EFS/132=245-K1:A1	245_A

6ES7132-4BF00-0AA0
+ TM-E15C24-01

-A3
&ETC/148.7

ET200S SIEMENS
8 DO DC24V 0,5A

A222.0 1/QX.0/DO0	1 DO0	=246&EFS/133=5246-K1:A1	246_A
A222.2 2/QX.2/DO2	2 DO2	=248&EFS/135=5248-K1:A1	248_A
A222.4 3/QX.4/DO4	3 DO4	=248.1&EFS/136=6248.1-K2:11	248_01_A_AS
A222.6 4/QX.6/DO6	4 DO6	=248.2&EFS/137=7248.2-K2:11	248_02_A_AS
A222.1 5/QX.1/DO1	5 DO1	=247&EFS/134=5247-K1:A1	247_A
A222.3 6/QX.3/DO3	6 DO3	=248.1&EFS/136=6248.1-K1:MAN	Allg_Reset_F24
A222.5 7/QX.5/DO5	7 DO5	=248.1&EFS/136=6248.1-K3:11	248_01_A_GS
A222.7 8/QX.7/DO7	8 DO7	=248.2&EFS/137=7248.2-K3:11	248_02_A_GS

6ES7132-4BF00-0AA0
+ TM-E15C24-01

-A4
&ETC/148.7

ET200S SIEMENS
8 DO DC24V 0,5A

A223.0 1/QX.0/DO0	1 DO0	=248.3&EFS/138=8248.3-K2:11	248_03_A_AS
A223.2 2/QX.2/DO2	2 DO2		Spare
A223.4 3/QX.4/DO4	3 DO4		Spare
A223.6 4/QX.6/DO6	4 DO6		Spare
A223.1 5/QX.1/DO1	5 DO1	=248.3&EFS/138=8248.3-K3:11	248_03_A_GS
A223.3 6/QX.3/DO3	6 DO3		Spare
A223.5 7/QX.5/DO5	7 DO5		Spare
A223.7 8/QX.7/DO7	8 DO7		Spare

6ES7132-4BF00-0AA0
+ TM-E15C24-01

-PAW1
&ETC/148.7

ET200S SIEMENS
2 AO U STANDARD

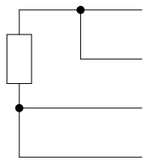

PAW358	1 QV	=226&EFS/120=226-G1:2	226_AA
	2 S+	=226&EFS/120.7	
	3 Mana	=226&EFS/120.7	
	4 S-	=226&EFS/120.7	

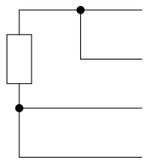

PAW360	5 QV	=243&EFS/130=243-G1:2	243_01_AA
	6 S+	=243&EFS/130.7	
	7 Mana	=243&EFS/130.7	
	8 S-	=243&EFS/130.7	

6ES7135-4FB00-0AB0
+ TM-E15C24-01

			Date	12.12.2019	Mixed feed plant Golden Poultry	BEYTEC ... your gateway to success	overview analog outputs	= SPS_F4
			Ed.	willen				+ F24
			Appr		Field 4		1 : 1	Part II
Modification	Date	Name	Original	V:\EPLAN\Projekte\Company\Beytec\2018\Feed Mill Alssad.elk	Replaced by			Page 145 / Page 605

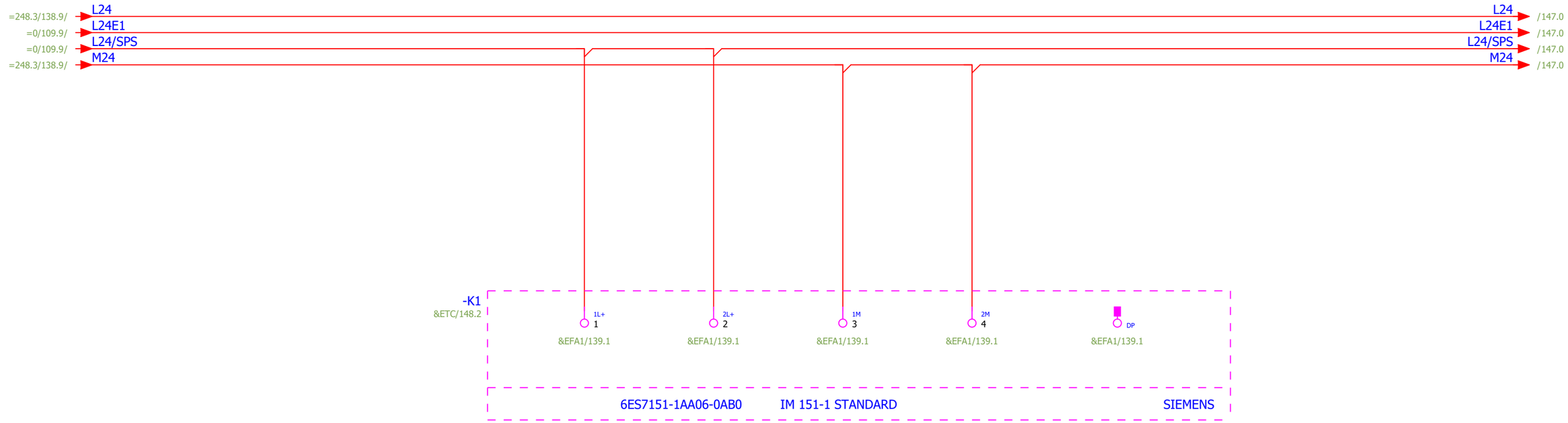
=248.3/138.9/
L24
=0/109.9/
L24E1
=0/109.9/
L24/SPS
=248.3/138.9/
M24
L24
/147.0
L24E1
/147.0
L24/SPS
/147.0
M24
/147.0
-K1
&ETC/148.2
1L+
1
&EFA1/139.1
2L+
2
&EFA1/139.1
1M
3
&EFA1/139.1
2M
4
&EFA1/139.1
DP
&EFA1/139.1
6ES7151-1AA06-0AB0
IM 151-1 STANDARD
SIEMENS

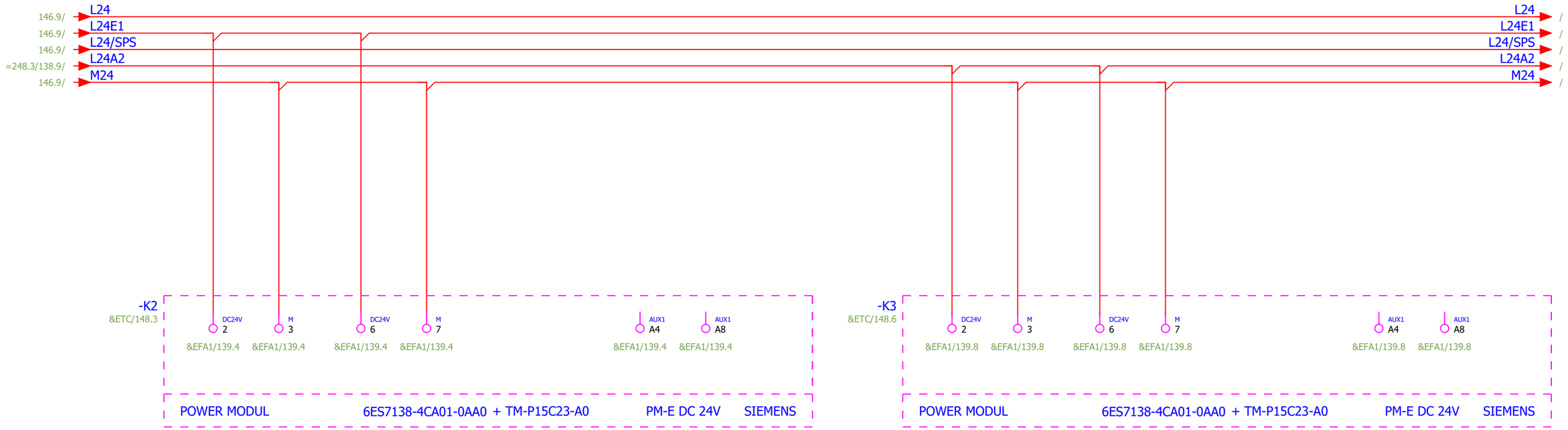

			Date	12.12.2019	Mixed feed plant Golden Poultry	BEYTEC ... your gateway to success	PLC power supply power module		= SPS_F4	
			Ed.	willen					+ F24	
			Appr		Field 4			1 : 1	Part II	Page 147
Modification	Date	Name	Original	V:\EPLAN\Projekte\Company\Alssad\Beytec\2018\Feed Mill Alssad.elk	Replaced by					Page 605

Replaced by BEYTEC

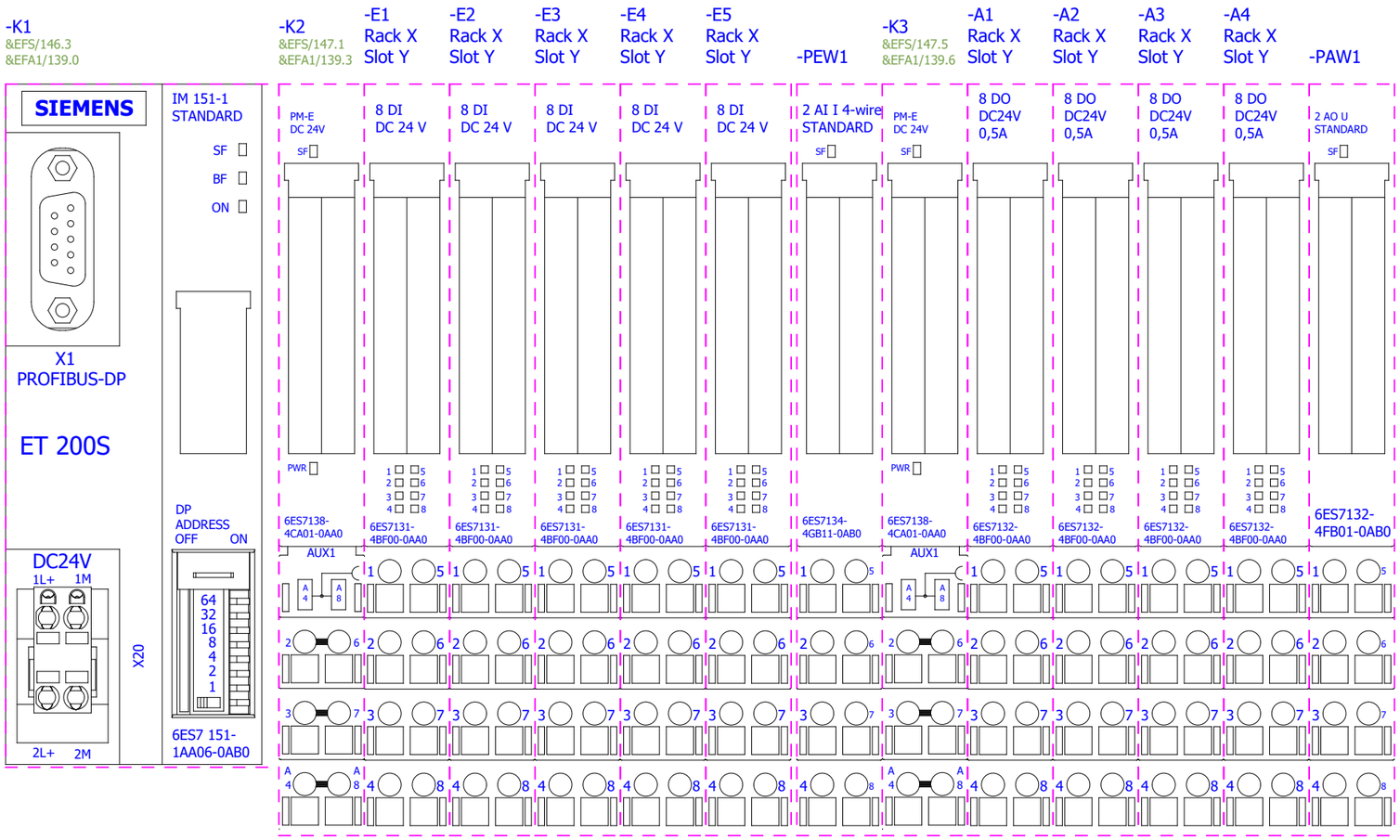
-K1
&EFS/146.3
&EFA1/139.0
SIEMENS
X1
PROFIBUS-DP
ET 200S
DC24V
1L+ 1M
2L+ 2M
X20
IM 151-1
STANDARD
SF
BF
ON
DP
ADDRESS
OFF ON
64
32
16
8
4
2
1
6ES7 151-
1AA06-0AB0
-K2
&EFS/147.1
&EFA1/139.3
PM-E
DC 24V
6ES7138-
4CA01-0AA0
AUX1
-E1
Rack X
Slot Y
8 DI
DC 24 V
6ES7131-
4BF00-0AA0
-E2
Rack X
Slot Y
8 DI
DC 24 V
6ES7131-
4BF00-0AA0
-E3
Rack X
Slot Y
8 DI
DC 24 V
6ES7131-
4BF00-0AA0
-E4
Rack X
Slot Y
8 DI
DC 24 V
6ES7131-
4BF00-0AA0
-E5
Rack X
Slot Y
8 DI
DC 24 V
6ES7131-
4BF00-0AA0
-PEW1
2 AI I 4-wire
STANDARD
6ES7134-
4GB11-0AB0
-K3
&EFS/147.5
&EFA1/139.6
PM-E
DC 24V
6ES7138-
4CA01-0AA0
AUX1
-A1
Rack X
Slot Y
8 DO
DC24V
0,5A
6ES7132-
4BF00-0AA0
-A2
Rack X
Slot Y
8 DO
DC24V
0,5A
6ES7132-
4BF00-0AA0
-A3
Rack X
Slot Y
8 DO
DC24V
0,5A
6ES7132-
4BF00-0AA0
-A4
Rack X
Slot Y
8 DO
DC24V
0,5A
6ES7132-
4BF00-0AA0
-PAW1
2 AO U
STANDARD
6ES7132-
4FB01-0AB0
SF
PWR

BEYTEC

... your gateway to success

Company / customer	BeyTec
Project description	Golden Poultry
Job number	Part II
Mounting location	Field 5

Technical data:

Operating voltage	400 V
Operating frequency	50 Hz
Operating current	
Power network	
Control voltage	24VDC
Protection class electrical	SK I
Degree of protection	IP54
Responsible for project	Willen

Created on 21.10.2019

Edit date 12.12.2019 by (short name) willen

Number of pages 605

Table of contents

Column X: An automatically generated page was edited

F06_001_EN

Page	Page description	supplementary page field	Date	Edited by	X
++A1+F25&BAA/149	Title page / cover sheet		12.12.2019	willen	X
++A1+F25&BAB/150	Table of contents : ++A1+F25&BAA/149 - =351++A1+F25&EFS/181		12.12.2019	willen	
++A1+F25&BAB/151	Table of contents : =351++A1+F25&EFS/182 - =SPS_F5++A1+F25&EFA1/214		12.12.2019	willen	
++A1+F25&BAB/152	Table of contents : =SPS_F5++A1+F25&EFS/215 - =SPS_F5++A1+F25&ETC/217		12.12.2019	willen	
++A1+F25&BPA/153	Summarized parts list : PXC.2702226 - ETN.PKZM0-4		12.12.2019	willen	X
++A1+F25&BPA/154	Summarized parts list : ETN.PKZM0-6,3 - SIE.6ES7135-4FB01-0AB0+TM-E15C24-01		12.12.2019	willen	X
=0++A1+F25&EFS/155	Control voltage field 5		12.12.2019	willen	
=251++A1+F25&EFS/156	screw feeder		12.12.2019	willen	
=251++A1+F25&EFS/157	screw feeder		12.12.2019	willen	
=252++A1+F25&EFS/158	conditioner		12.12.2019	willen	
=254.3++A1+F25&EFS/159	lubrication press 1		12.12.2019	willen	
=254.3++A1+F25&EFS/160	activation Koller adjustment pellet press 1		12.12.2019	willen	
=255++A1+F25&EFS/161	activation lock cooler 1		12.12.2019	willen	
=255++A1+F25&EFS/162	activation inlet distributor 1		12.12.2019	willen	
=255++A1+F25&EFS/163	activation pellet cooler discharge 1		12.12.2019	willen	
=255++A1+F25&EFS/164	door switch cooler 1		12.12.2019	willen	
=255++A1+F25&EFS/165	temperature monitoring cooler 1		12.12.2019	willen	
=255++A1+F25&EFS/166	pneumatic slide rest emptying cooler 1		12.12.2019	willen	
=256++A1+F25&EFS/167	fire flap		12.12.2019	willen	
=258++A1+F25&EFS/168	activation lock		12.12.2019	willen	
=258.1++A1+F25&EFS/169	activation screw		12.12.2019	willen	
=259++A1+F25&EFS/170	load circuit blower cyclone 1		12.12.2019	willen	
=259++A1+F25&EFS/171	control circuit blower cyclone 1		12.12.2019	willen	
=260++A1+F25&EFS/172	activation feeder roll crumbler 1		12.12.2019	willen	
=260++A1+F25&EFS/173	activation crumbler 1 motor 1		12.12.2019	willen	
=260++A1+F25&EFS/174	activation crumbler 1 motor 2		12.12.2019	willen	
=260++A1+F25&EFS/175	door switch crumbler 1		12.12.2019	willen	
=260.2++A1+F25&EFS/176	roller adjustment crumbler 1		12.12.2019	willen	
=261++A1+F25&EFS/177	load circuit trough chain conveyor		12.12.2019	willen	
=262++A1+F25&EFS/178	load circuit elevator		12.12.2019	willen	
=264++A1+F25&EFS/179	activation screening machine		12.12.2019	willen	
=265++A1+F25&EFS/180	load circuit trough chain conveyor		12.12.2019	willen	
=351++A1+F25&EFS/181	screw feeder		12.12.2019	willen	

Table of contents

Column X: An automatically generated page was edited

F06_001_EN

Page	Page description	supplementary page field	Date	Edited by	X
=351++A1+F25&EFS/182	screw feeder		12.12.2019	willen	
=352++A1+F25&EFS/183	conditioner		12.12.2019	willen	
=354.3++A1+F25&EFS/184	lubrication press 2		12.12.2019	willen	
=354.3++A1+F25&EFS/185	activation Koller adjustment pellet press 2		12.12.2019	willen	
=355++A1+F25&EFS/186	activation lock cooler 2		12.12.2019	willen	
=355++A1+F25&EFS/187	activation inlet distributor 1		12.12.2019	willen	
=355++A1+F25&EFS/188	activation pellet cooler discharge 1		12.12.2019	willen	
=355++A1+F25&EFS/189	door switch cooler 1		12.12.2019	willen	
=355++A1+F25&EFS/190	temperature monitoring cooler 1		12.12.2019	willen	
=355++A1+F25&EFS/191	pneumatic slide rest emptying cooler 1		12.12.2019	willen	
=356++A1+F25&EFS/192	fire flap		12.12.2019	willen	
=358++A1+F25&EFS/193	activation lock		12.12.2019	willen	
=358.1++A1+F25&EFS/194	activation screw		12.12.2019	willen	
=359++A1+F25&EFS/195	load circuit blower cyclone 2		12.12.2019	willen	
=359++A1+F25&EFS/196	control circuit blower cyclone 2		12.12.2019	willen	
=360++A1+F25&EFS/197	activation feeder roll crumbler 2		12.12.2019	willen	
=360++A1+F25&EFS/198	activation crumbler 2 motor 1		12.12.2019	willen	
=360++A1+F25&EFS/199	activation crumbler 2 motor 2		12.12.2019	willen	
=360++A1+F25&EFS/200	door switch crumbler 2		12.12.2019	willen	
=360.2++A1+F25&EFS/201	roller adjustment crumbler 2		12.12.2019	willen	
=361++A1+F25&EFS/202	load circuit trough chain conveyor		12.12.2019	willen	
=362++A1+F25&EFS/203	load circuit elevator		12.12.2019	willen	
=364++A1+F25&EFS/204	activation screening machine		12.12.2019	willen	
=365++A1+F25&EFS/205	load circuit trough chain conveyor		12.12.2019	willen	
=SPS_F5++A1+F25&EFA1/206	overview bus coupler and power module		12.12.2019	willen	
=SPS_F5++A1+F25&EFA1/207	overview inputs		12.12.2019	willen	
=SPS_F5++A1+F25&EFA1/208	overview inputs		12.12.2019	willen	
=SPS_F5++A1+F25&EFA1/209	overview inputs		12.12.2019	willen	
=SPS_F5++A1+F25&EFA1/210	overview inputs		12.12.2019	willen	
=SPS_F5++A1+F25&EFA1/211	overview outputs		12.12.2019	willen	
=SPS_F5++A1+F25&EFA1/212	overview outputs		12.12.2019	willen	
=SPS_F5++A1+F25&EFA1/213	overview outputs		12.12.2019	willen	
=SPS_F5++A1+F25&EFA1/214	overview analog outputs		12.12.2019	willen	

Table of contents

Column X: An automatically generated page was edited

F06_001_EN

Page	Page description	supplementary page field	Date	Edited by	X
=SPS_F5++A1+F25&EFS/215	PLC power supply bus coupler		12.12.2019	willen	
=SPS_F5++A1+F25&EFS/216	PLC power supply power module		12.12.2019	willen	
=SPS_F5++A1+F25&ETC/217	PLC overview field 5		12.12.2019	willen	

Summarized parts list

F02_002_en_US

Order number	Quantity	Designation	Type number	Supplier
2702226	1	LED enclosure light	PLD E 608 W 315/F	PXC
4970886	2	LS- Schalter C16 / 3-pol	DLS 6I C16-3	Doepke
101457	4	Busbar adapter, 55mm, 63A, 1TS	BBA4-63	ETN
T221761	8	MS220K, PTC-resistor trip device, AC/DC24V	MS220K	ZIEHL
234804	2	Inverter, degree of protection IP 20	FR-E740-060SC-EC	MITSUBISHI
2903370	4	????	RIF-0-RPT-24DC/21	PHOENIX
215004	2	EMC filter	FFR-MSH-095-16A-RF1	MITSUBISHI
277146	8	Contactor, 3p+1N/O, 11kW/400V/AC3	DILM25-10(RDC24)	ETN
046988	4	Motor-protective circuit-breaker, 3p, Ir=16-20A, screw connection	PKZM0-20	EATON
082882	16	Standard auxiliary contact, 1N/O+1N/C, flush mounting, screw connection	NHI-E-11-PKZ0	EATON
101451	14	Busbar adapter, 45mm, 25A, 1TS	BBA0-25	ETN
239349	4	Wiring module, for DILM17-M32	PKZM0-XM32DE	ETN
2900543	14	????	ELR H3-I-SC- 24DC/500AC-2	PHOENIX
	0			
2900545	4	????	ELR H3-I-SC- 24DC/500AC-9	PHOENIX
2903308	6	relay module 24DC/4X21	RIF-2-RPT-LDP-24DC/4X21	PHOENIX
283131	2	Secondary terminal wire kit, star-delta, for DILM17-32	DILM32-XSL	ETN
276421	4	Auxiliary contact module, 1NO+1N/C, surface mounting, screw connection	DILA-XHI11	ETN
277018	2	Contactor, 3p+1N/O, 7.5kW/400V/AC3	DILM17-10(RDC24)	ETN
83.82.0.240.0000	2	Modular timer, Star-delta (SD) - AC (50/60 Hz)/DC - 24...240 V	83.82.0.240.0000	FINDER
222355	2	Motor-protective circuit-breaker, 3p, Ir=40-50A, screw connection	PKZM4-50	EATON
276705	2	Contactor, 3p+1N/O, 4kW/400V/AC3	DILM9-10(24VDC)	ETN
072739	4	Motor-protective circuit-breaker, 3p, Ir=6.3-10A, screw connection	PKZM0-10	EATON
283149	8	Kit, +component adapter, for DOL starter for DILM7-M15	PKZM0-XDM12	ETN
046989	2	Motor-protective circuit-breaker, 3p, Ir=20-25A, screw connection	PKZM0-25	EATON
2900574	2	Hybrid motor starter	ELR H5-I-SC- 24DC/500AC-2	PXC
276565	6	Contactor, 3p+1N/O, 3kW/400V/AC3	DILM7-10(24VDC)	ETN
072737	2	Motor-protective circuit-breaker, 3p, Ir=2.5-4A, screw connection	PKZM0-4	EATON

Summarized parts list

F02_002_en_US

Order number	Quantity	Designation	Type number	Supplier
072738	2	Motor-protective circuit-breaker, 3p, Ir=4-6.3A, screw connection	PKZM0-6,3	EATON
6ES7132-4BF00-0AA0 / 6ES7193-4CB30-0AA0	6	8DO, 24V DC, 0.5A / TM-E15C24-01	6ES7132-4BF00-0AA0 / 6ES7193-4CB30-0AA0	SIE
6ES7131-4BF00-0AA0 / 6ES7193-4CB30-0AA0	8	8DI, 24V DC / TM-E15C24-01	6ES7131-4BF00-0AA0 / 6ES7193-4CB30-0AA0	SIE
6ES7151-1AA06-0AB0	1	ET200S, IM151-1 STD, 12MBIT/S	6ES7151-1AA06-0AB0	SIE
6ES7138-4CA01-0AA0 / 6ES7193-4CD30-0AA0	2	PM-E, DC 24V / TM-P15C23-A0	6ES7138-4CA01-0AA0 / 6ES7193-4CD30-0AA0	SIE
6ES7135-4FB01-0AB0 / 6ES7193-4CB30-0AA0	1	2AO U, +/-10V, 1-5V, 13BIT / TM-E15C24-01	6ES7135-4FB01-0AB0 / 6ES7193-4CB30-0AA0	SIE

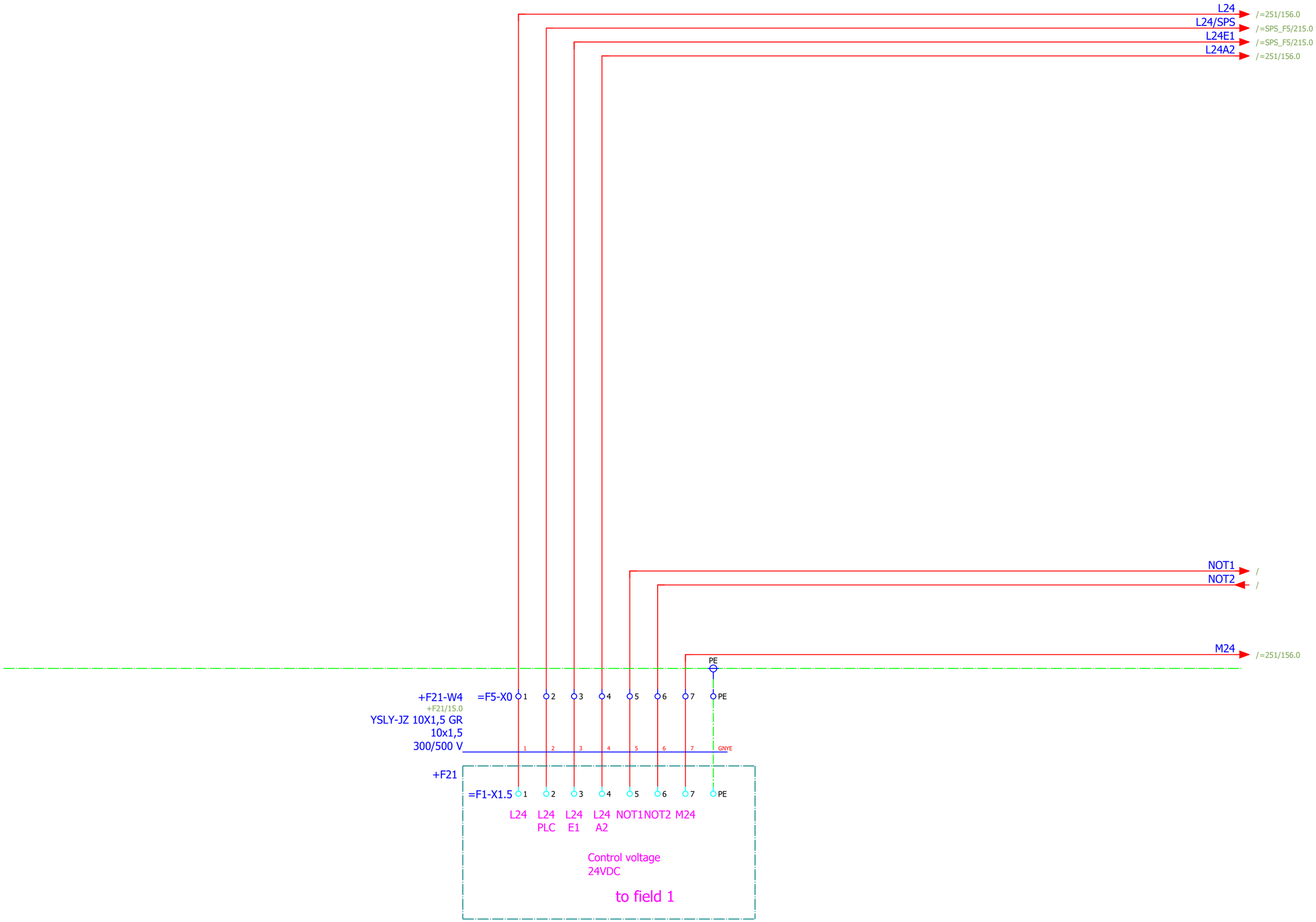
L24
/=251/156.0
L24/SPS
/=SPS_F5/215.0
L24E1
/=SPS_F5/215.0
L24A2
/=251/156.0
NOT1
/
NOT2
/
M24
/=251/156.0
PE
+F21-W4
+F21/15.0
=F5-X0
1 2 3 4 5 6 7 PE
YSLY-JZ 10X1,5 GR
10x1,5
300/500 V
1 2 3 4 5 6 7 GNYE
+F21
=F1-X1.5
1 2 3 4 5 6 7 PE
L24 L24 PLC L24 E1 L24 A2 NOT1 NOT2 M24
Control voltage
24VDC
to field 1

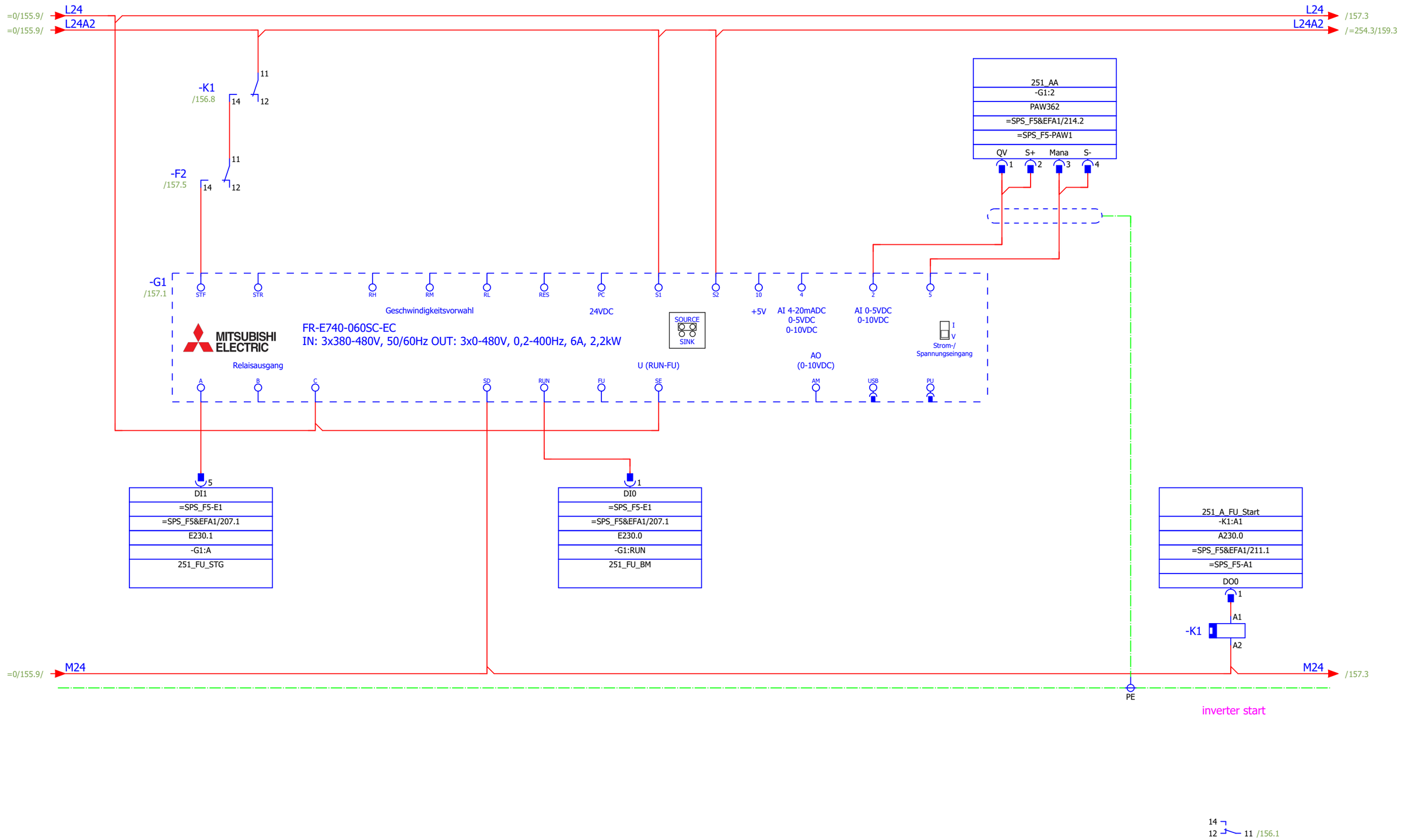
=0/155.9/
L24
L24A2
/157.3
/=254.3/159.3
-K1
/156.8
-F2
/157.5
-G1
/157.1
STF
STR
RH
RM
RL
RES
PC
S1
S2
10
4
2
5
Geschwindigkeitsvorwahl
24VDC
+5V
AI 4-20mADC
0-5VDC
0-10VDC
AI 0-5VDC
0-10VDC
SOURCE
SINK
MITSUBISHI ELECTRIC
FR-E740-060SC-EC
IN: 3x380-480V, 50/60Hz OUT: 3x0-480V, 0,2-400Hz, 6A, 2,2kW
Relaisausgang
U (RUN-FU)
AO
(0-10VDC)
Strom-/
Spannungseingang
A
B
C
SD
RUN
FU
SE
AM
USB
PU
251_AA
-G1:2
PAW362
=SPS_F5&EFA1/214.2
=SPS_F5-PAW1
QV
S+
Mana
S-
DI1
=SPS_F5-E1
=SPS_F5&EFA1/207.1
E230.1
-G1:A
251_FU_STG
DI0
=SPS_F5-E1
=SPS_F5&EFA1/207.1
E230.0
-G1:RUN
251_FU_BM
251_A_FU_Start
-K1:A1
A230.0
=SPS_F5&EFA1/211.1
=SPS_F5-A1
DO0
-K1
A1
A2
M24
PE
inverter start
/156.1

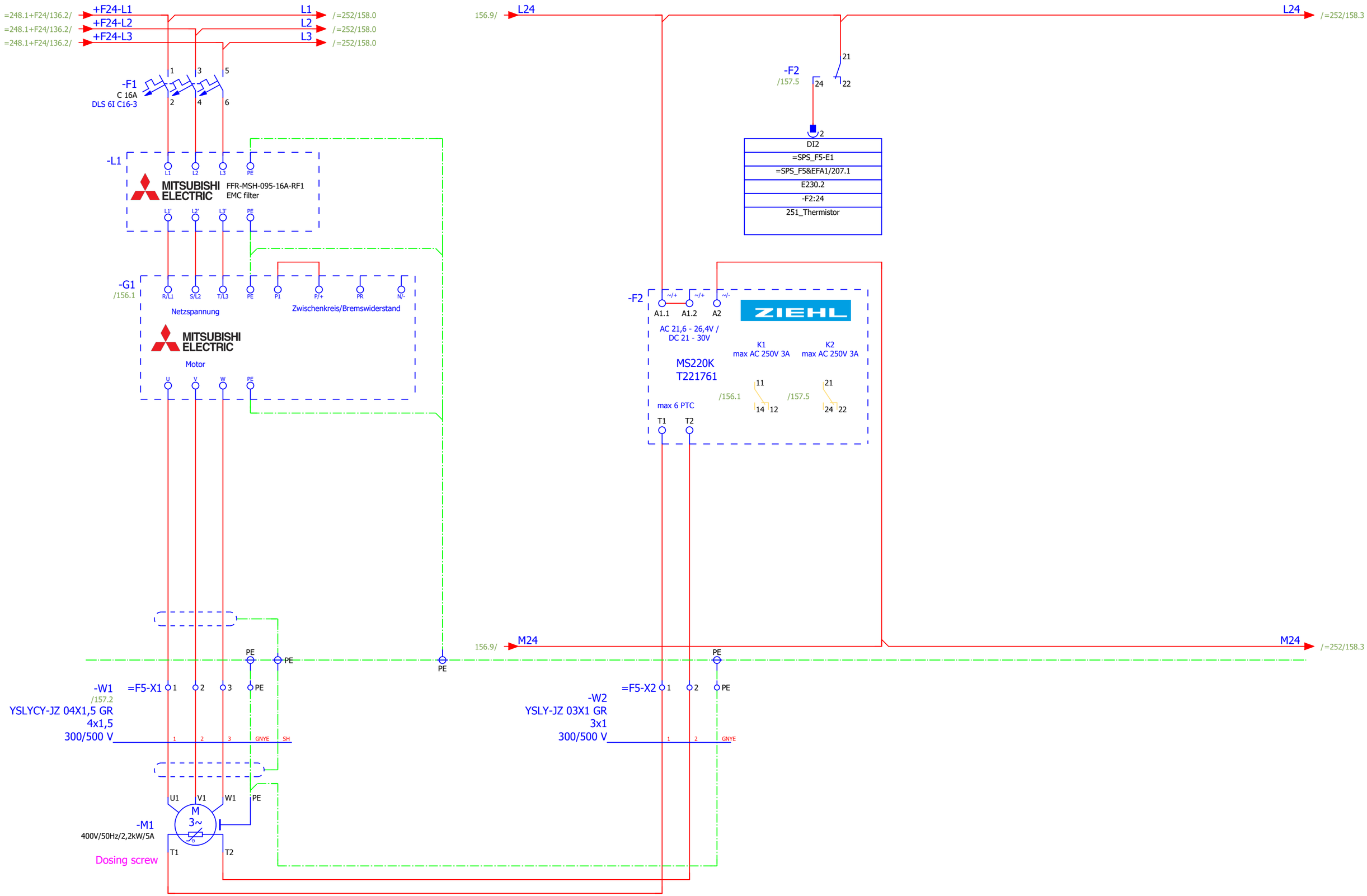

156

+F27/389

			Date	12.12.2019	Mixed feed plant Golden Poultry	BEYTEC ... your gateway to success	screw feeder	= 251	
			Ed.	willen				+ F25	
			Appr		Field 5			1 : 1	Part II	Page 157
Modification	Date	Name	Original	V:\EPLAN\Projekte\Company\Replace\Beytec\2018\Feed Mill Alssad.elk	Replaced by					Page 605

Replace Beytec

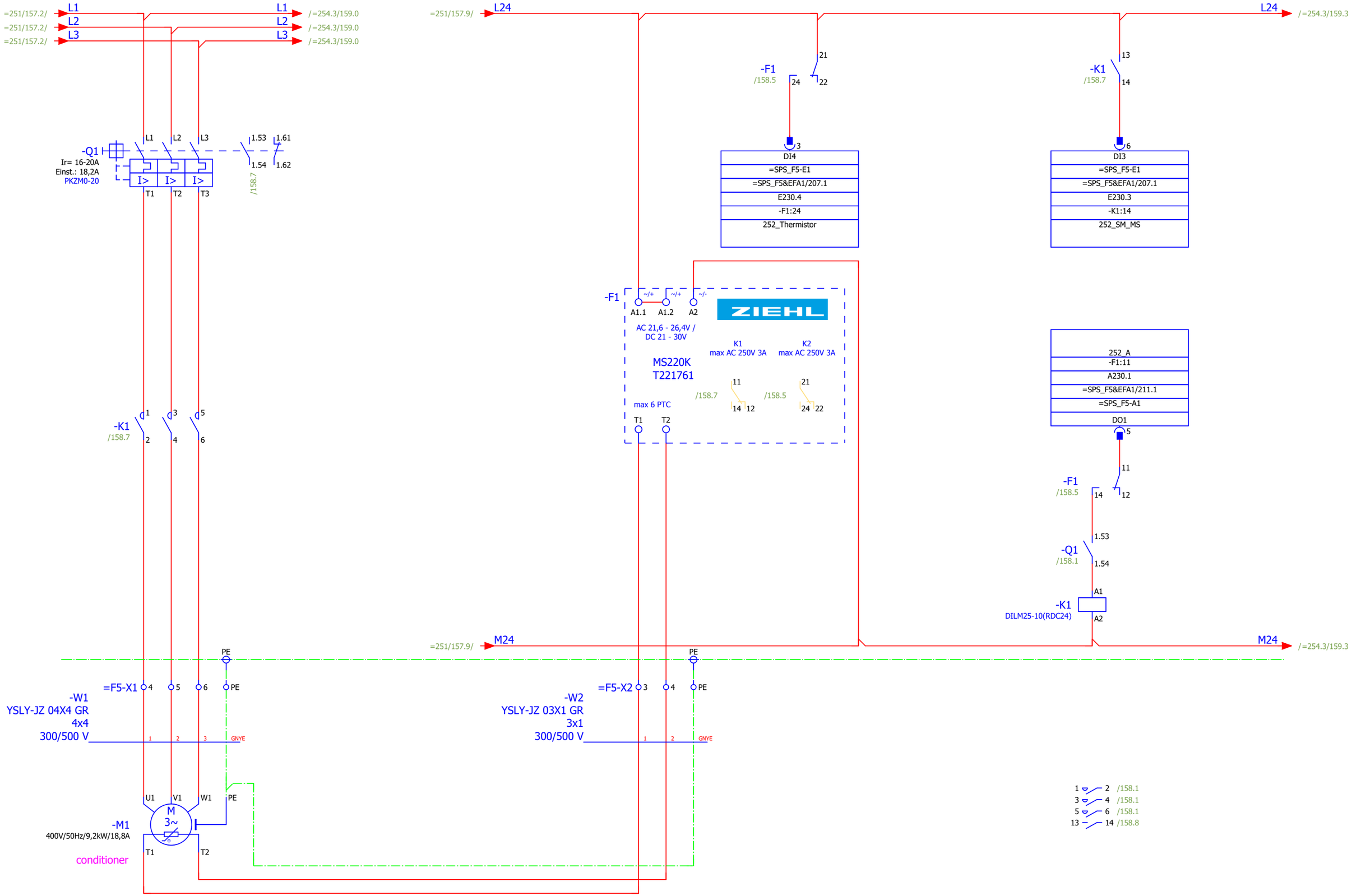

=251+F27/389

=254++A2+PP21/520

			Date	12.12.2019	Mixed feed plant Golden Poultry	BEYTEC	conditioner	= 252	
			Ed.	willen				+ F25	
			Appr		Field 5	... your gateway to success		1 : 1 / Part II	Page 158
Modification	Date	Name	Original	V:\EPLAN\Projekte\Company\Replace\Beytec\2018\Feed Mill Alssad.elk	Replaced by				Page 605

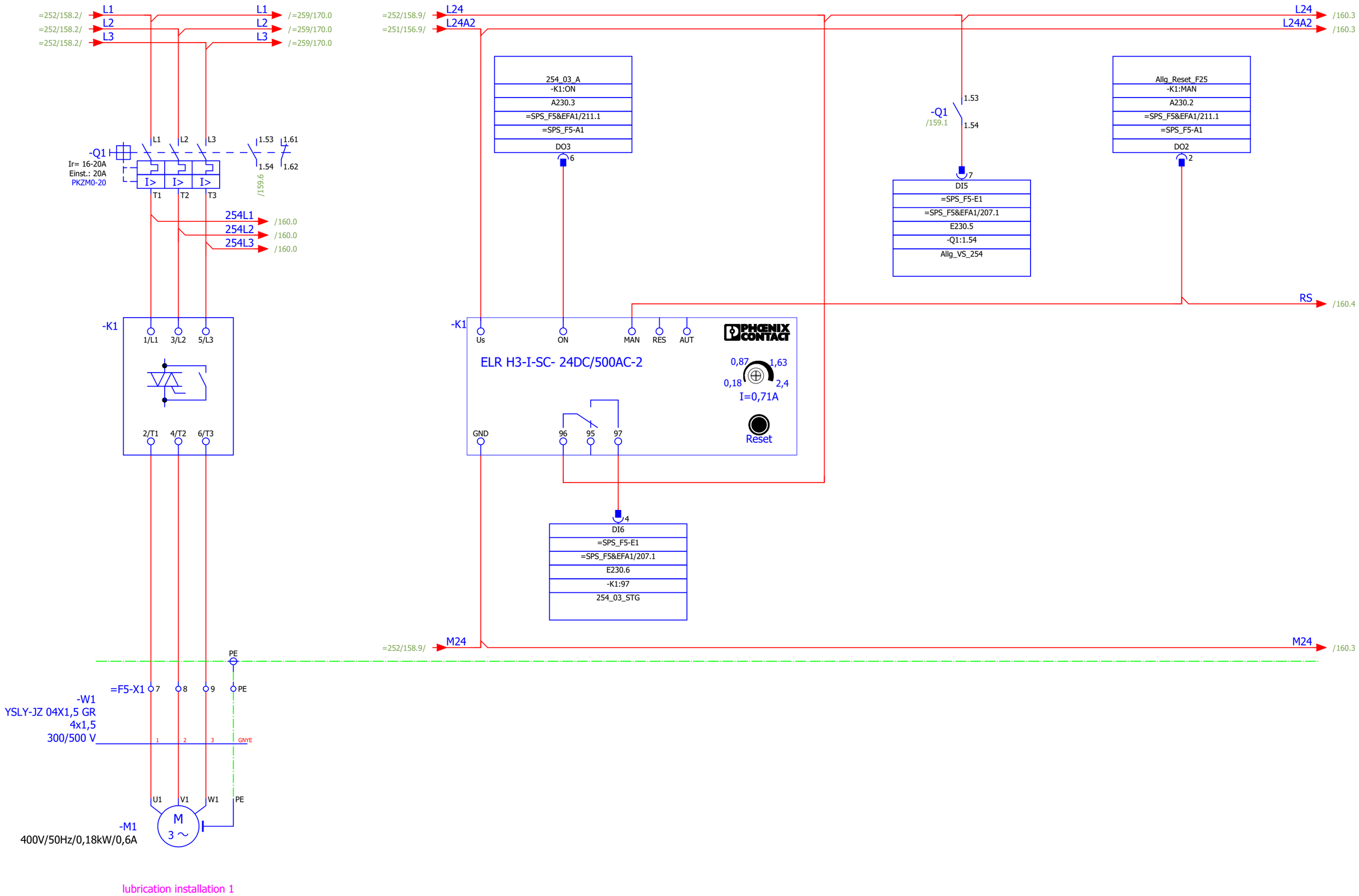

lubrication installation 1

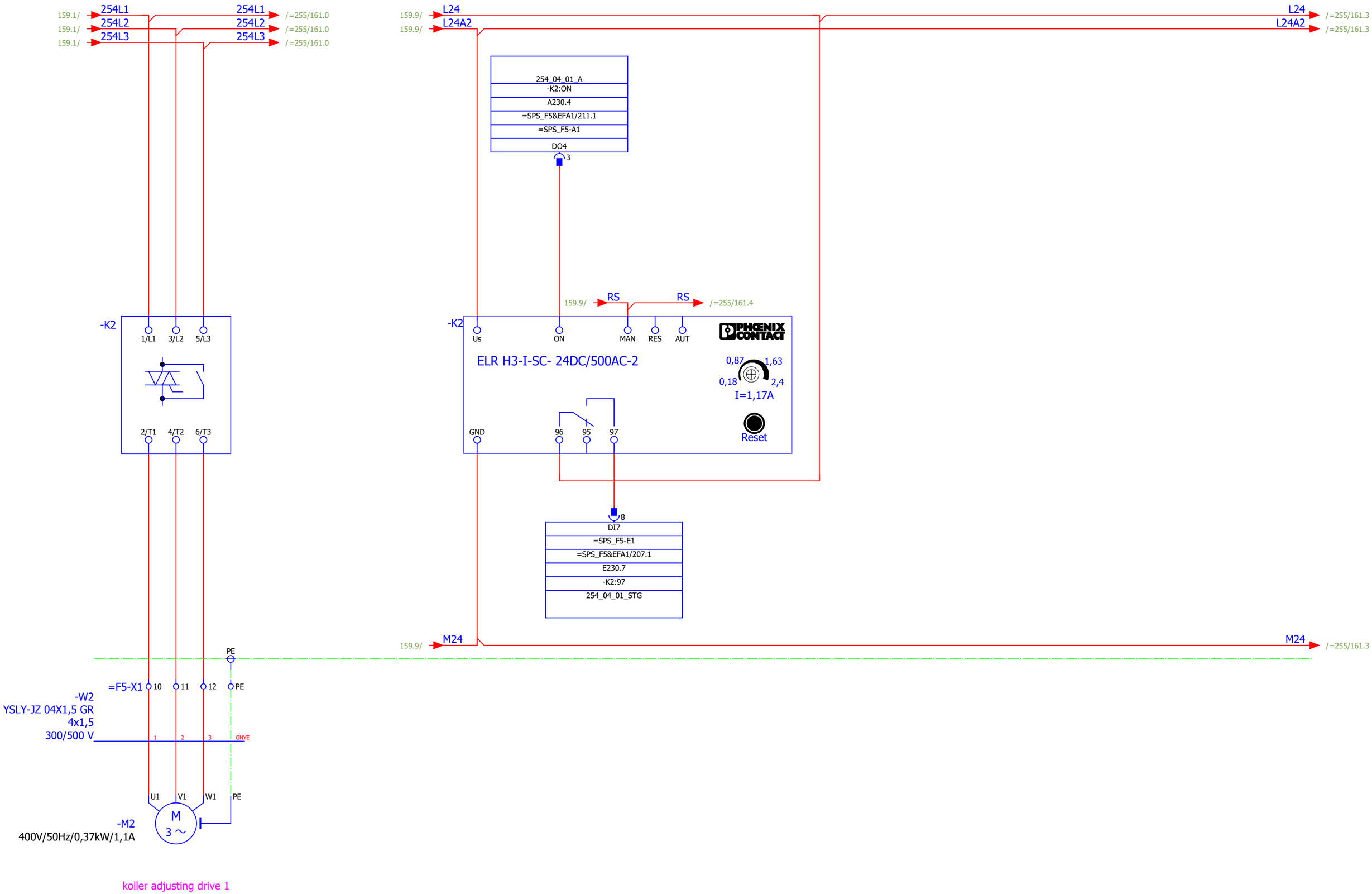

159

=255/161

			Date	12.12.2019	Mixed feed plant Golden Poultry	BEYTEC ... your gateway to success	activation Koller adjustment pellet press 1		= 254.3	
			Ed.	willen	Field 5				+ F25	
			Appr					1 : 1	Part II	Page 160
Modification	Date	Name	Original	V:\EPLAN\Projekte\Company\Beytec\2018\Feed Mill Alssad.elk	Replaced by					Page 605

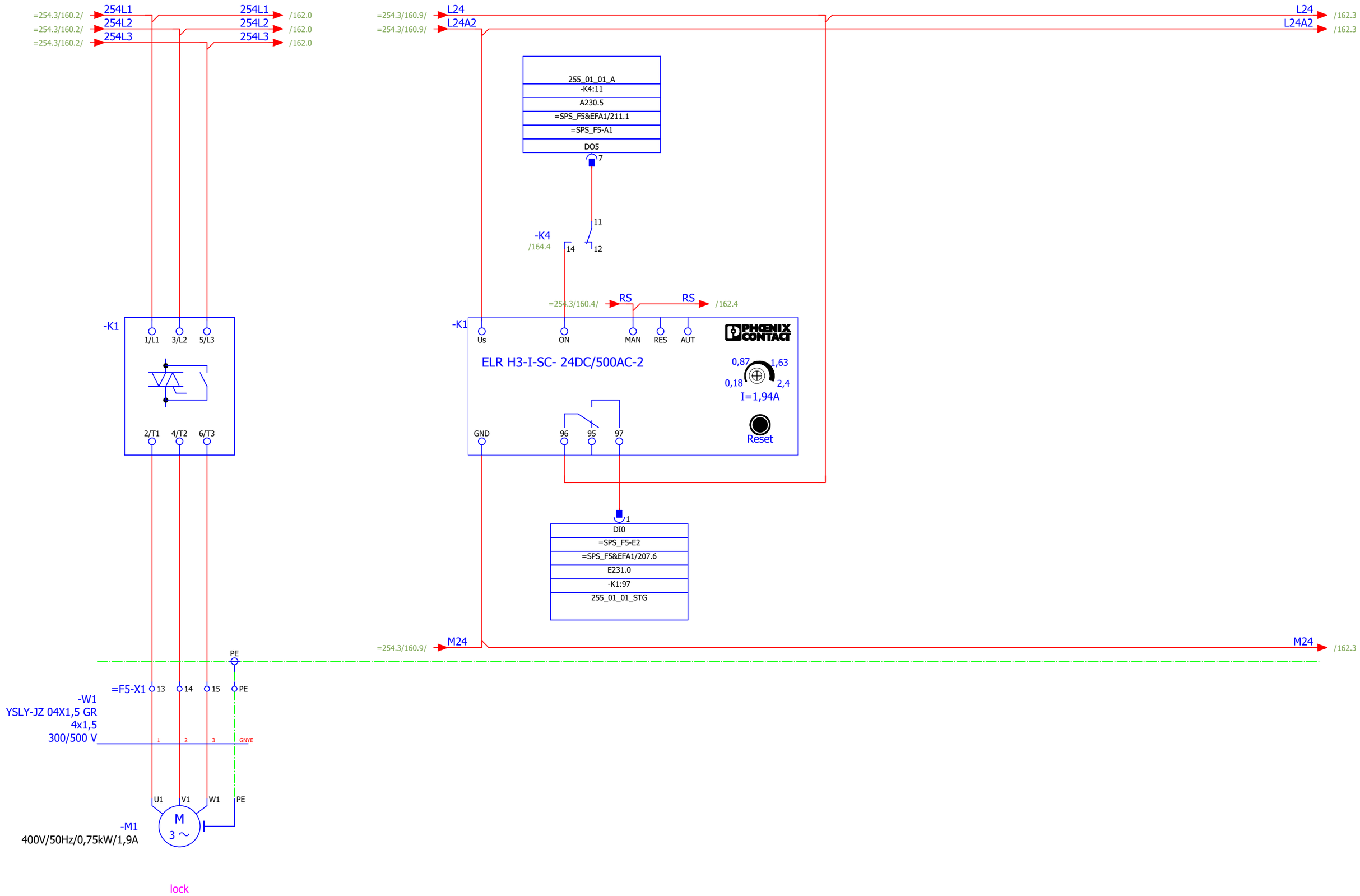
=254.3/160.2/
254L1
254L2
254L3
/162.0
=254.3/160.9/
L24
L24A2
/162.3
255_01_01_A
-K4:11
A230.5
=SPS_F5&EFA1/211.1
=SPS_F5-A1
DO5
7
11
-K4
/164.4
14
12
=254.3/160.4/
RS
/162.4
-K1
1/L1
3/L2
5/L3
2/T1
4/T2
6/T3
Us
ON
MAN
RES
AUT
PHOENIX CONTACT
ELR H3-I-SC- 24DC/500AC-2
0,87
1,63
0,18
2,4
I=1,94A
Reset
GND
96
95
97
1
DI0
=SPS_F5-E2
=SPS_F5&EFA1/207.6
E231.0
-K1:97
255_01_01_STG
M24
PE
=F5-X1
13
14
15
-W1
YSLY-JZ 04X1,5 GR
4x1,5
300/500 V
GNYE
U1
V1
W1
-M1
M
3 ~
400V/50Hz/0,75kW/1,9A
lock

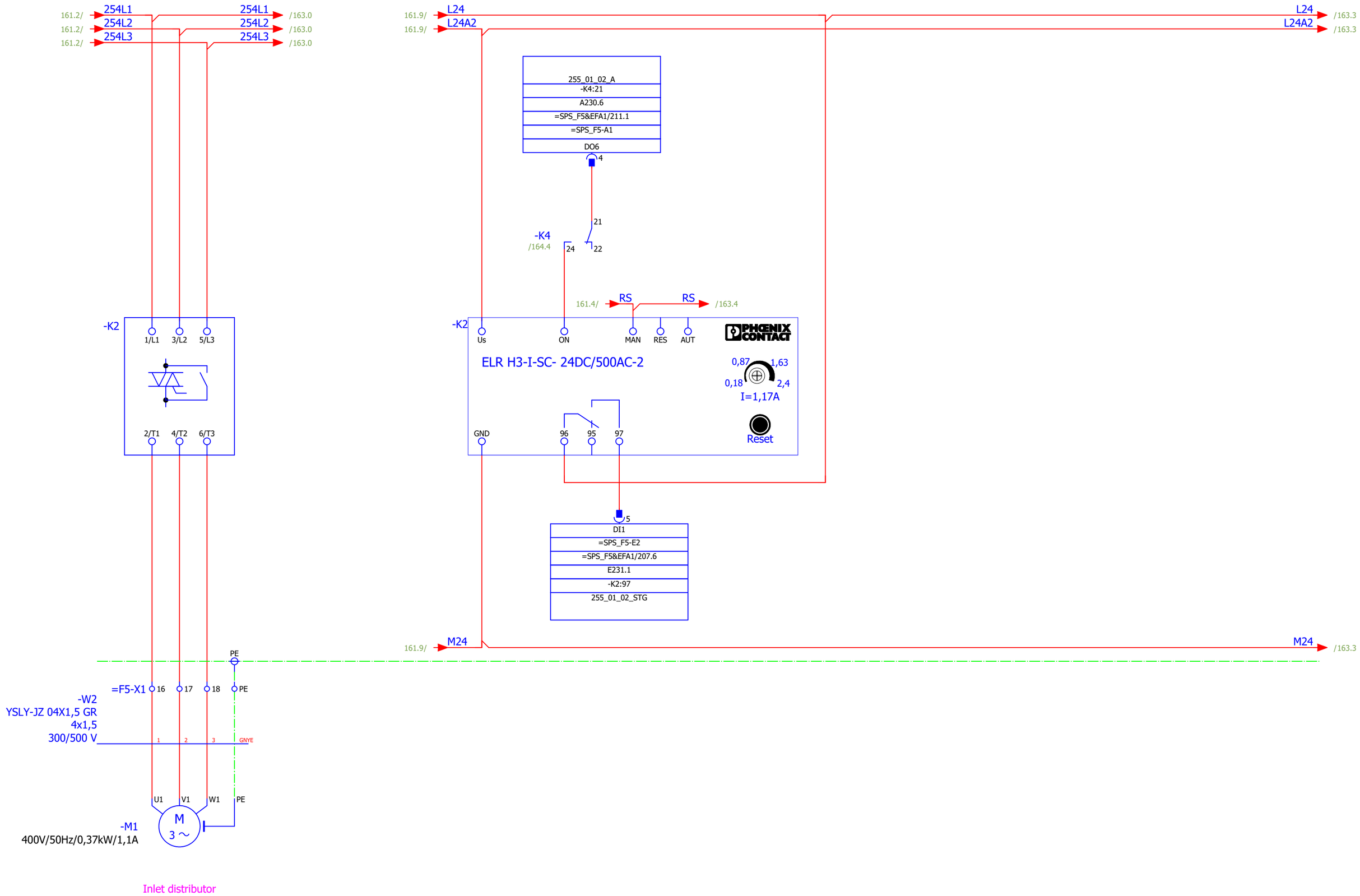

161 163

			Date	12.12.2019	Mixed feed plant Golden Poultry	BEYTEC ... your gateway to success	activation inlet distributor 1		= 255	
			Ed.	willen	Field 5				+ F25	
			Appr					1 : 1	Part II	Page 162
Modification	Date	Name	Original	V:\EPLAN\Projekte\Company\Beytec\2018\Feed Mill Alssad.elk	Replaced by					Page 605

Replaced by

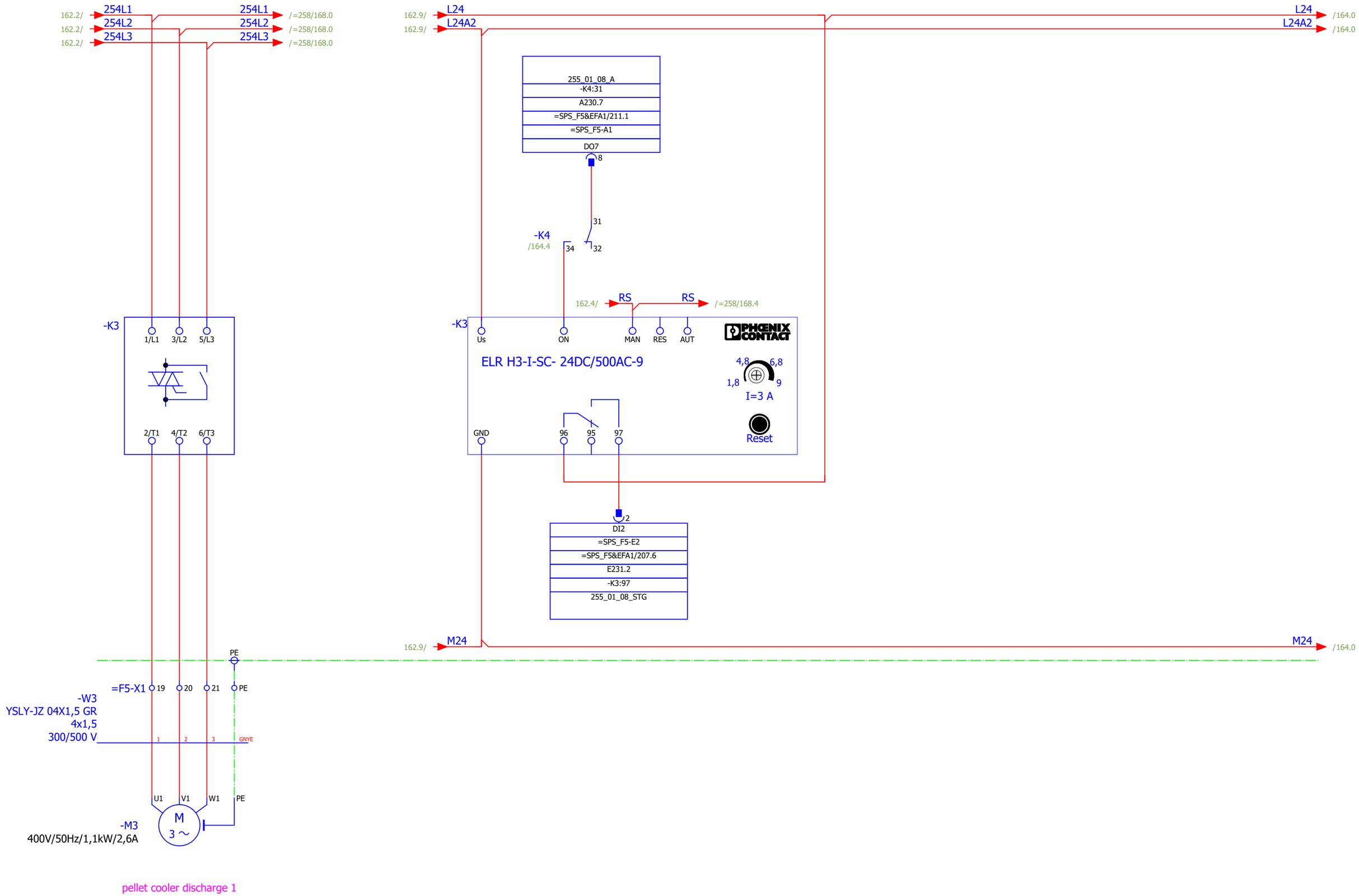

pellet cooler discharge 1

162

164

			Date	12.12.2019	Mixed feed plant Golden Poultry	BEYTEC ... your gateway to success	activation pellet cooler discharge 1			= 255	
			Ed.	willen						+ F25	
			Appr		Field 5			1 : 1	Part II	Page 163	
Modification	Date	Name	Original	V:\EPLAN\Projekte\Company\Alpaca\Beytec\2018\Feed Mill Alssad.elk	Replaced by					Page 605	

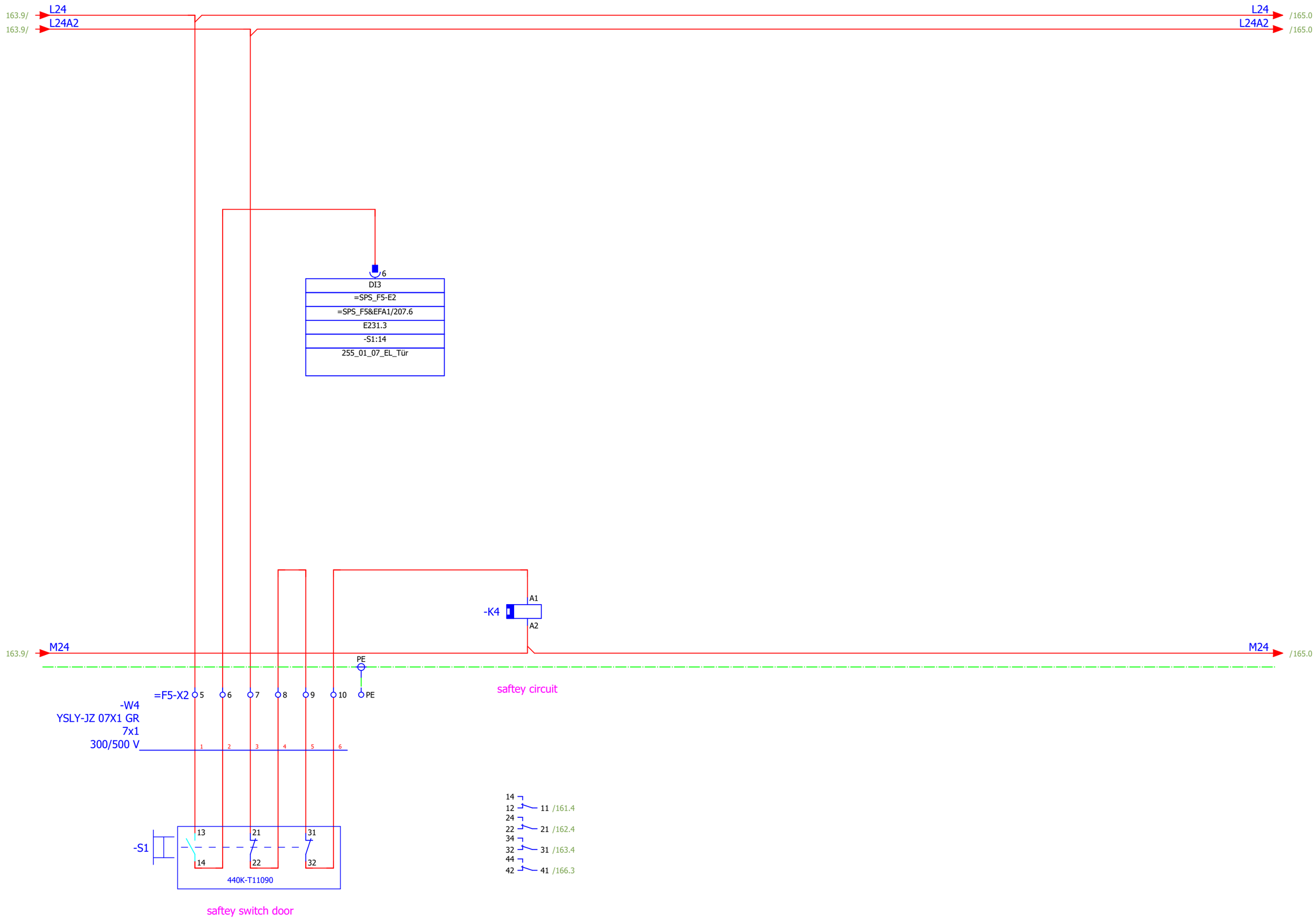
163.9/
L24
L24A2
/165.0
6
DI3
=SPS_F5-E2
=SPS_F5&EFA1/207.6
E231.3
-S1:14
255_01_07_EL_Tür
-K4
A1
A2
M24
PE
=F5-X2
5
6
7
8
9
10
-W4
YSLY-JZ 07X1 GR
7x1
300/500 V
saftey circuit
-S1
13
14
21
22
31
32
440K-T11090
saftey switch door
11 /161.4
21 /162.4
31 /163.4
41 /166.3

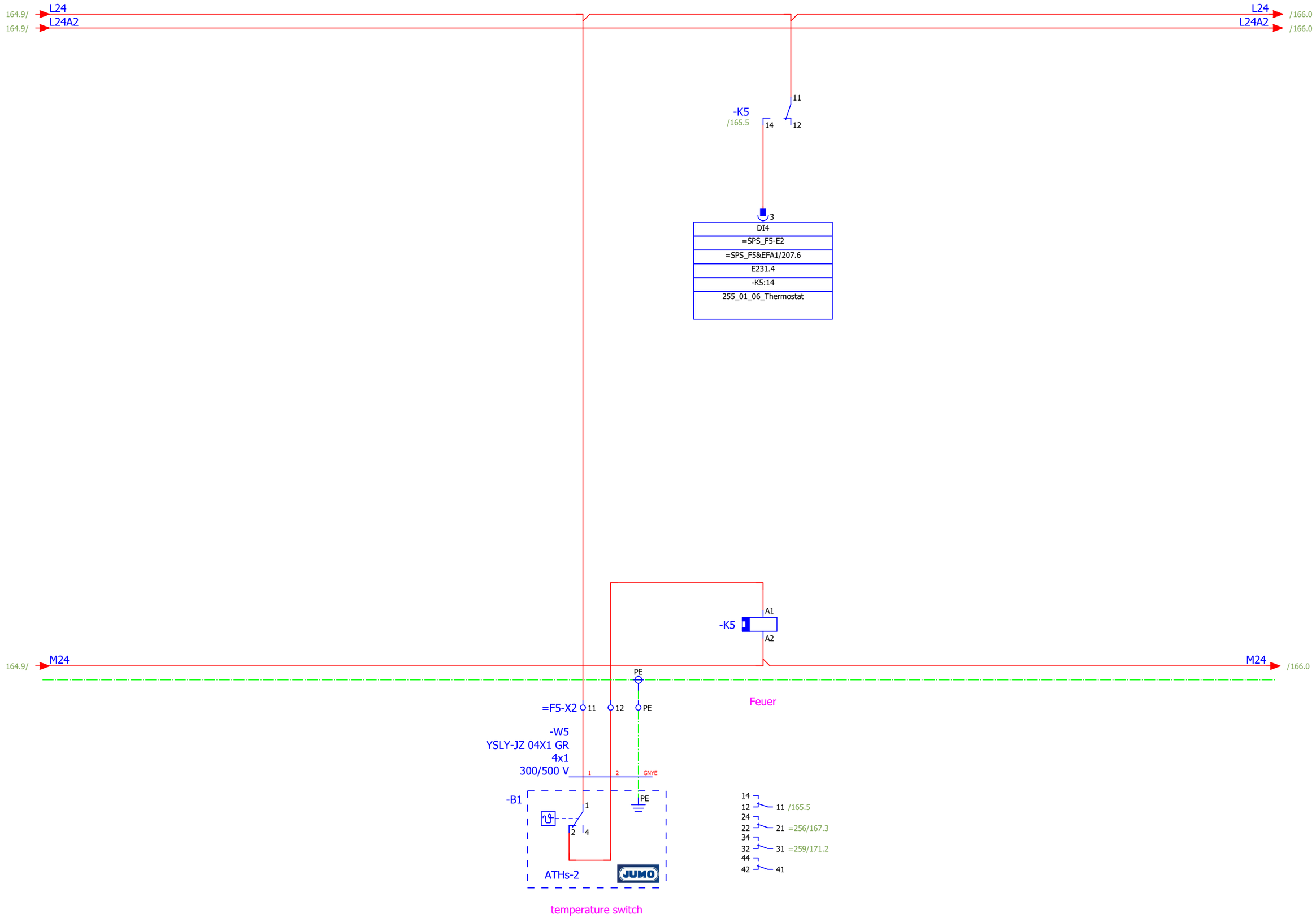

164

166

			Date	12.12.2019	Mixed feed plant Golden Poultry	BEYTEC ... your gateway to success	temperature monitoring cooler 1
			Ed.	willen			
			Appr		Field 5		
Modification	Date	Name	Original	V:\EPLAN\Projekte\Company\Replace\Beytec\2018\Feed Mill Alssad.elk	Replaced by		

= 255
+ F25
1 : 1
Part II
Page 165
Page 605

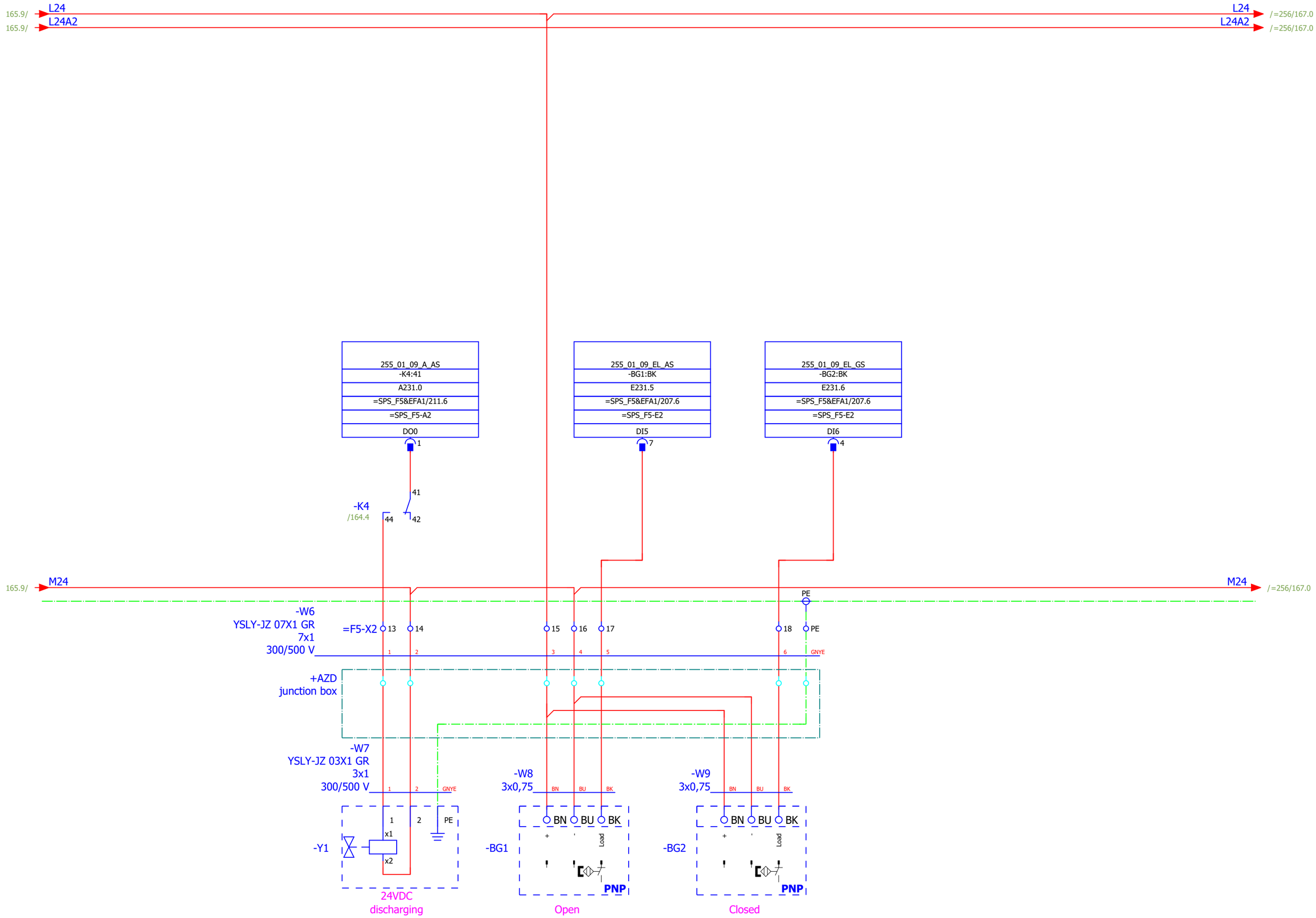

			Date	12.12.2019	Mixed feed plant Golden Poultry	BEYTEC ... your gateway to success	pneumatic slide rest emptying cooler 1		= 255
			Ed.	willen					+ F25
			Appr		Field 5			1 : 1	Part II
Modification	Date	Name	Original	V:\EPLAN\Projekte\Company\Replace\Beytec\2018\Feed Mill Alssad.elk	Replaced by				Page 166
									Page 605

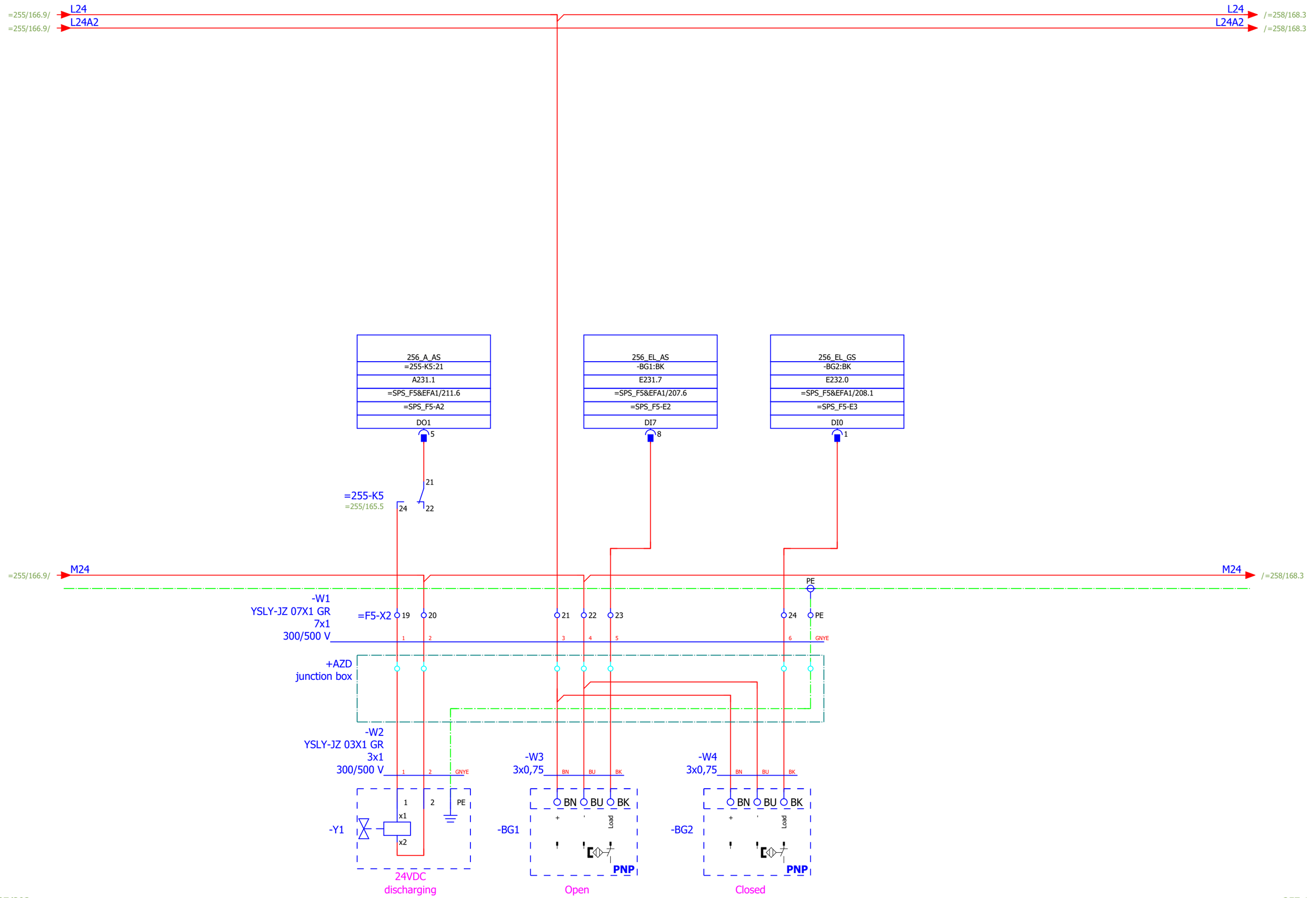
=255/166.9/
L24
L24A2
/=258/168.3
256_A_AS
=255-K5:21
A231.1
=SPS_F5&EFA1/211.6
=SPS_F5-A2
DO1
256_EL_AS
-BG1:BK
E231.7
=SPS_F5&EFA1/207.6
=SPS_F5-E2
DI7
256_EL_GS
-BG2:BK
E232.0
=SPS_F5&EFA1/208.1
=SPS_F5-E3
DI0
=255-K5
=255/165.5
M24
PE
-W1
YSLY-JZ 07X1 GR
7x1
300/500 V
=F5-X2
+AZD
junction box
-W2
YSLY-JZ 03X1 GR
3x1
300/500 V
GNYE
-W3
3x0,75
BN
BU
BK
-W4
3x0,75
-Y1
x1
x2
-BG1
-BG2
Load
PNP
24VDC
discharging
Open
Closed

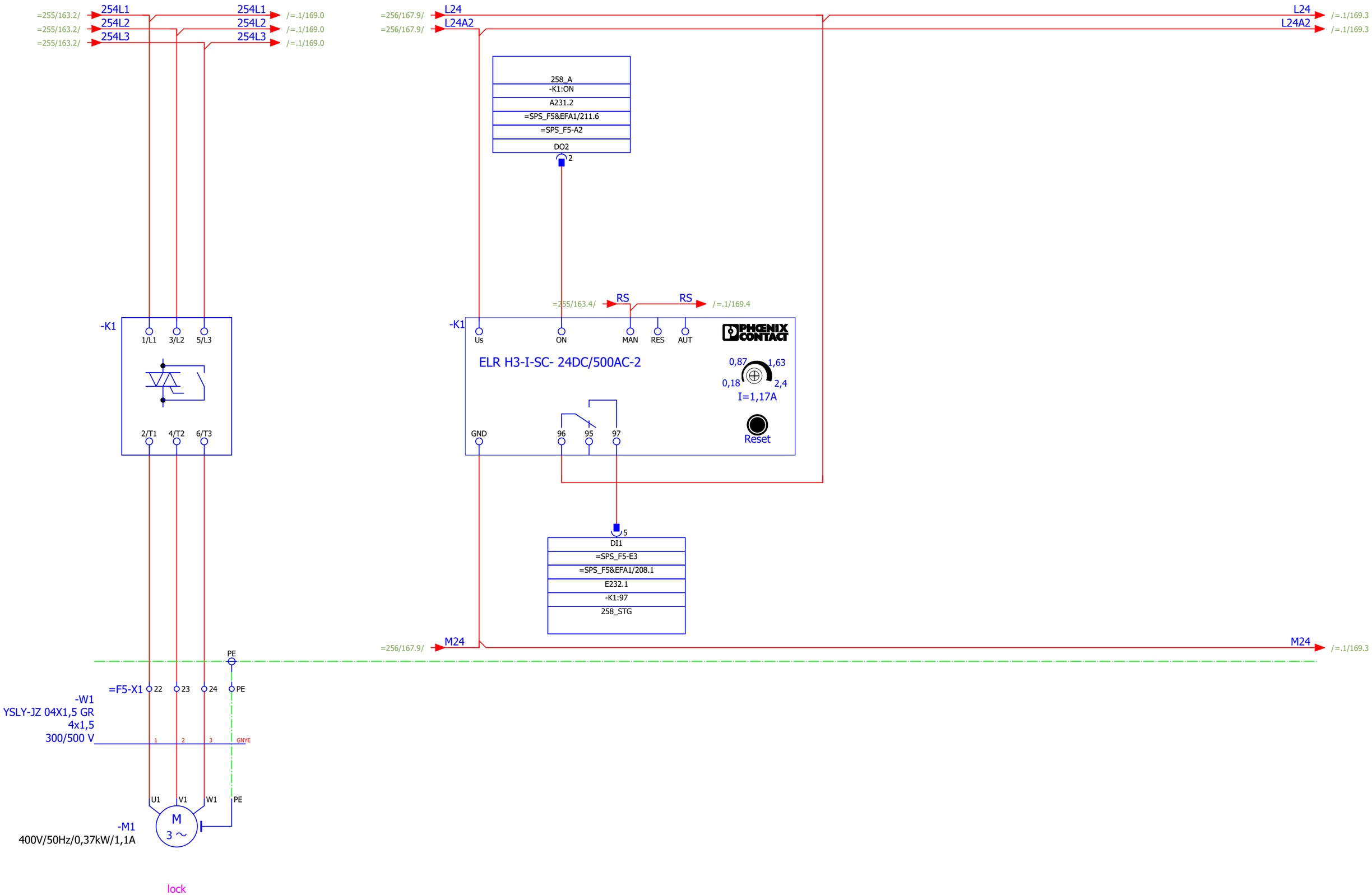

=257.1+F27/394

=.1/169

			Date	12.12.2019	Mixed feed plant Golden Poultry	BEYTEC ... your gateway to success	activation lock	= 258	
			Ed.	willen	Field 5			+ F25	
			Appr				1 : 1	Part II	Page 168
Modification	Date	Name	Original	V:\EPLAN\Projekte\Company\Beytec\2018\Feed Mill Alssad.elk	Replaced by				Page 605

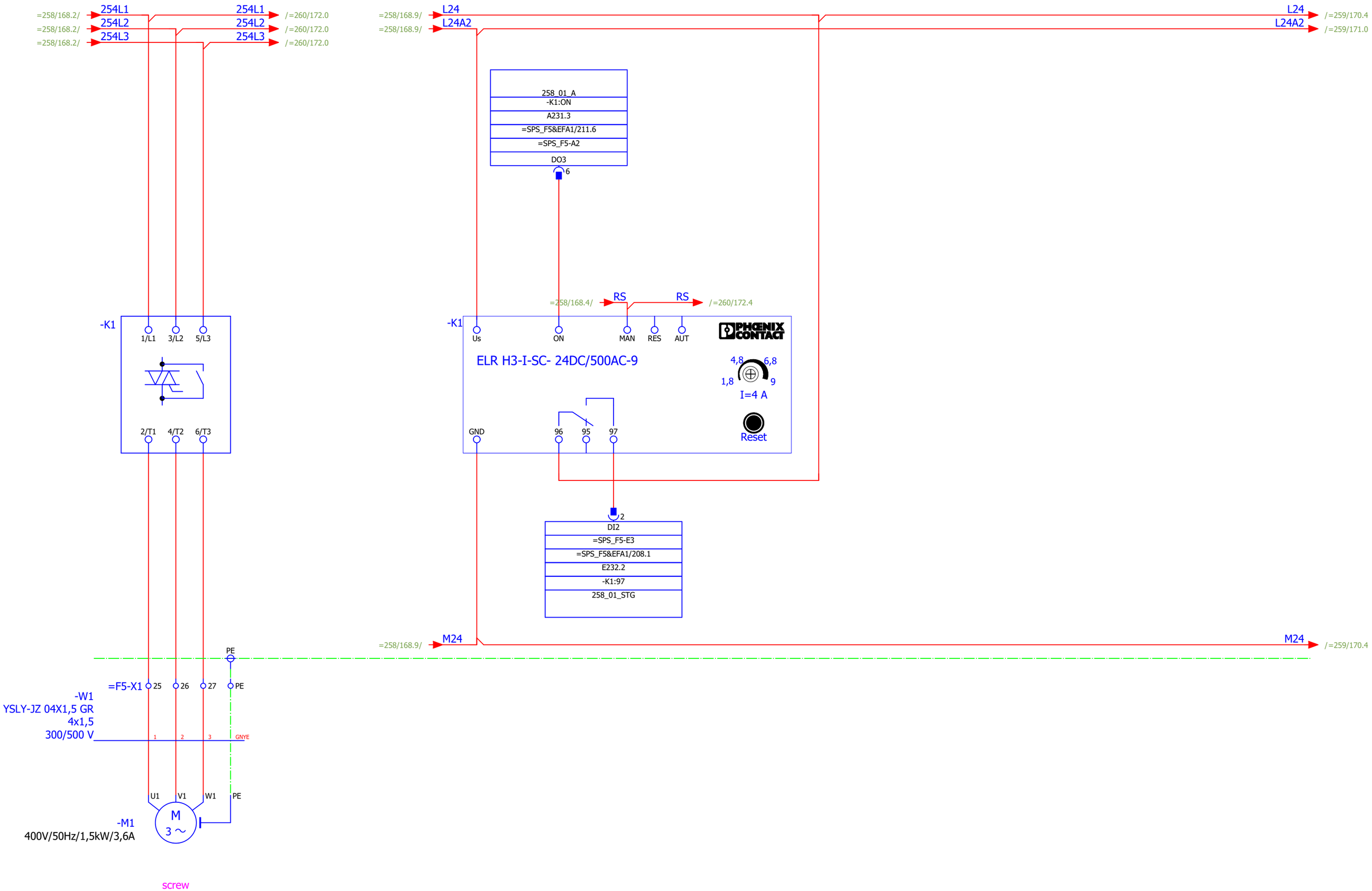

=258/168

+F27/395

			Date	12.12.2019	Mixed feed plant Golden Poultry	BEYTEC ... your gateway to success	activation screw		= 258.1	
			Ed.	willen	Field 5				+ F25	
			Appr					1 : 1	Part II	Page 169
Modification	Date	Name	Original	V:\EPLAN\Projekte\Company\Beytec\2018\Feed Mill Alssad.elk	Replaced by					Page 605

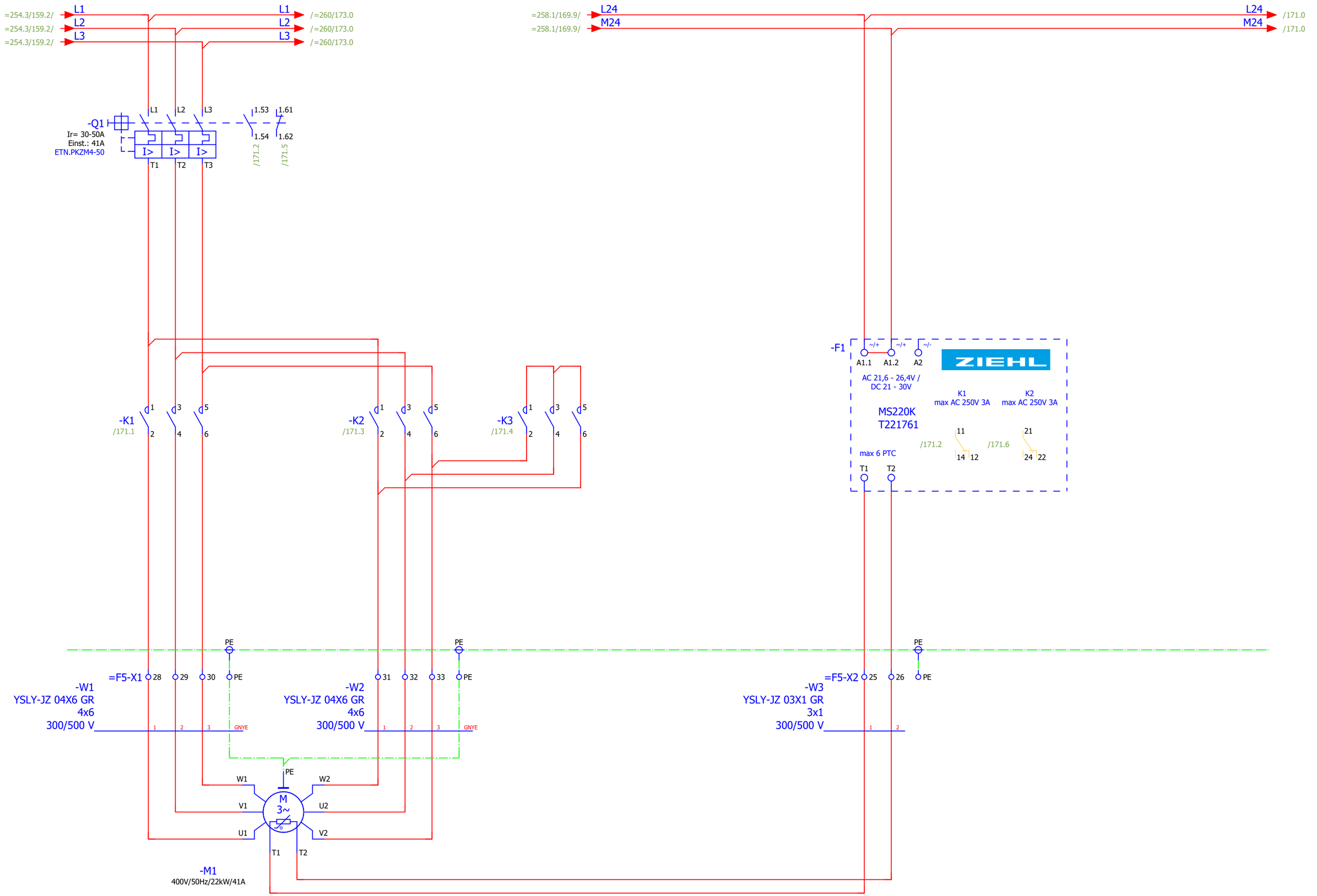
=254.3/159.2/
L1
L2
L3
/=260/173.0
=258.1/169.9/
L24
M24
/171.0
-Q1
Ir= 30-50A
Einst.: 41A
ETN.PKZM4-50
I>
T1
T2
T3
1.53
1.54
1.61
1.62
/171.2
/171.5
-K1
/171.1
-K2
/171.3
-K3
/171.4
-F1
A1.1
A1.2
A2
AC 21,6 - 26,4V /
DC 21 - 30V
ZIEHL
MS220K
T221761
K1
max AC 250V 3A
K2
max AC 250V 3A
max 6 PTC
/171.6
PE
=F5-X1
-W1
YSLY-JZ 04X6 GR
4x6
300/500 V
-W2
YSLY-JZ 04X6 GR
4x6
300/500 V
=F5-X2
-W3
YSLY-JZ 03X1 GR
3x1
300/500 V
GNYE
W1
W2
V1
U2
U1
V2
M
3~
-M1
400V/50Hz/22kW/41A

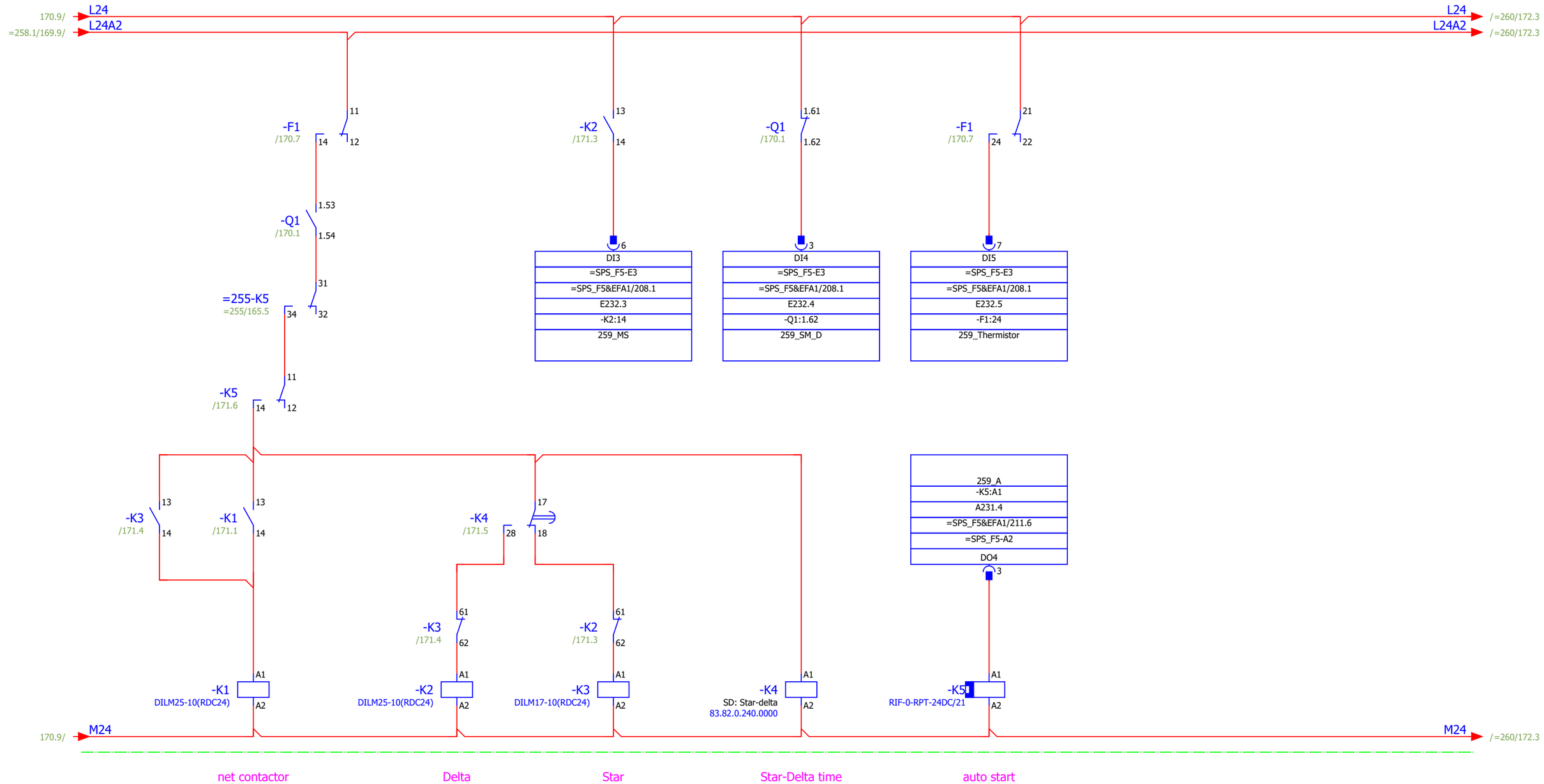

1	2	/170.1	1	2 /170.2
3	4	/170.1	3	4 /170.3
5	6	/170.1	5	6 /170.3
13	14	/171.1	13	14 /171.4
			53	54
			61	62 /171.4

1	2	/170.4	28	
3	4	/170.4	18	17 /171.3
5	6	/170.4	14	
13	14	/171.1	12	11 /171.1
53	54			
61	62	/171.3		

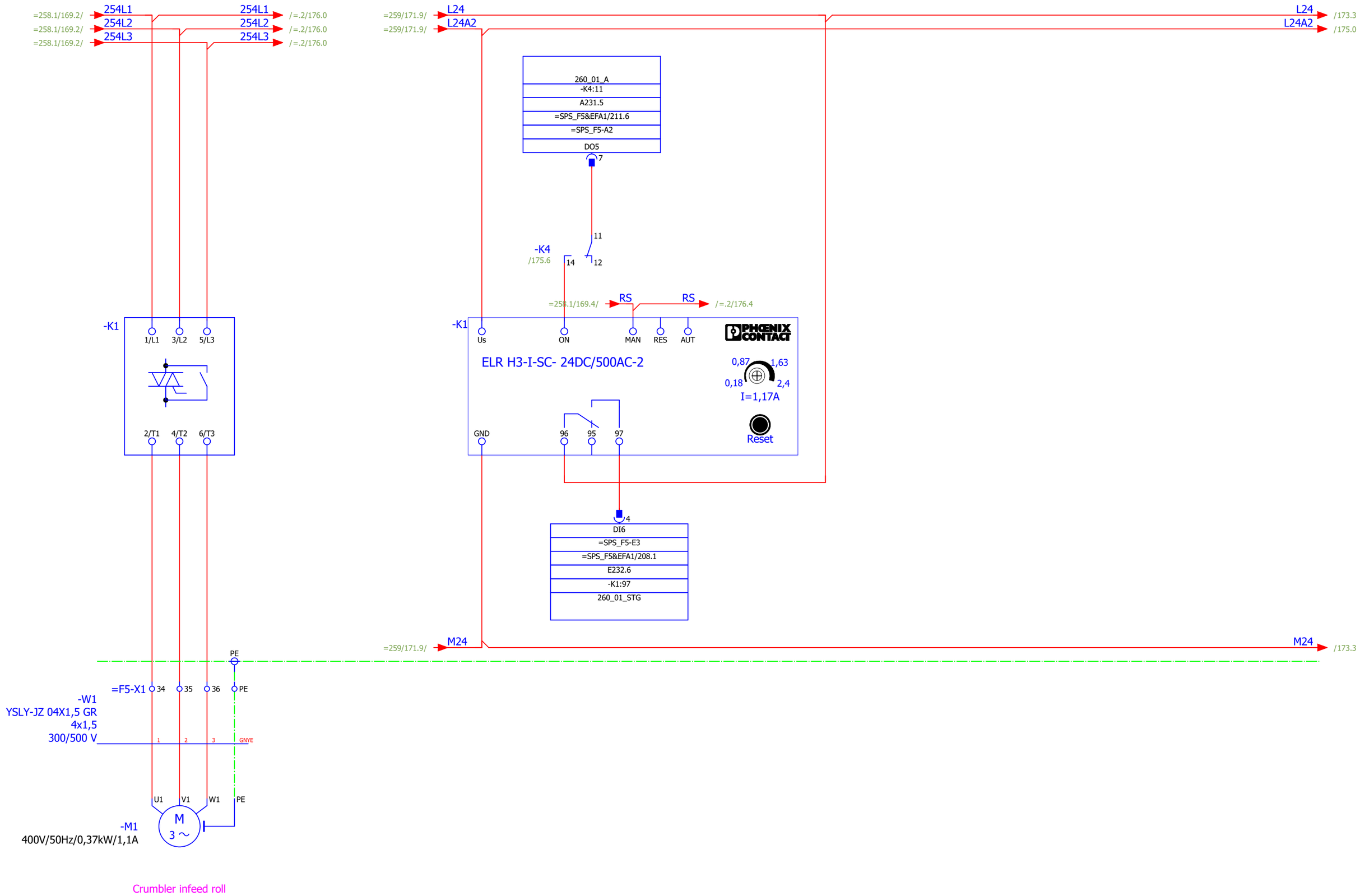

Crumbler infeed roll

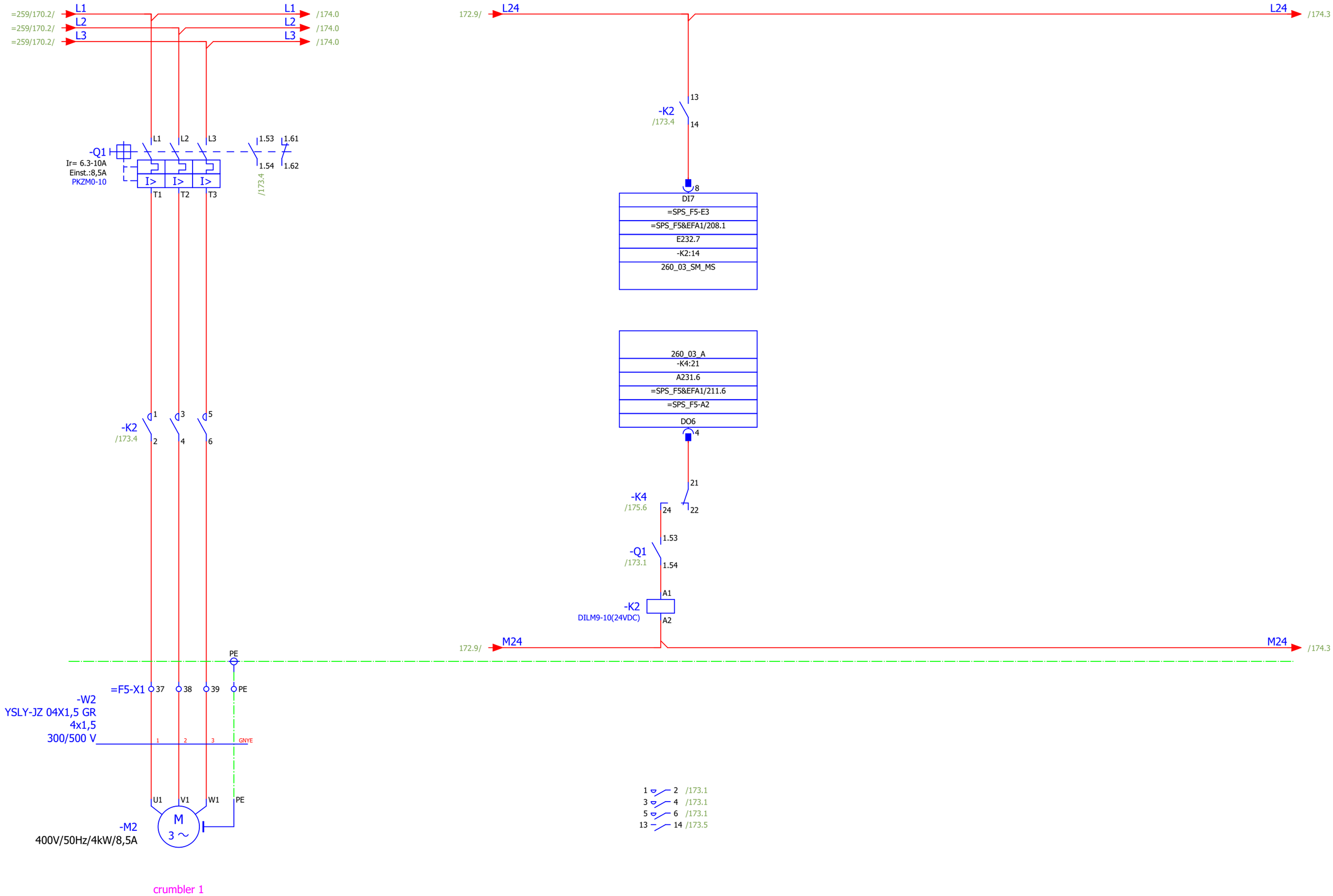

172 174

			Date	12.12.2019	Mixed feed plant Golden Poultry	BEYTEC ... your gateway to success	activation crumbler 1 motor 1	= 260	
			Ed.	willen				+ F25	
			Appr		Field 5			1 : 1 Part II	Page 173
Modification	Date	Name	Original	V:\EPLAN\Projekte\Company\Replaced\Beytec\2018\Feed Mill Alssad.elk	Replaced by				Page 605

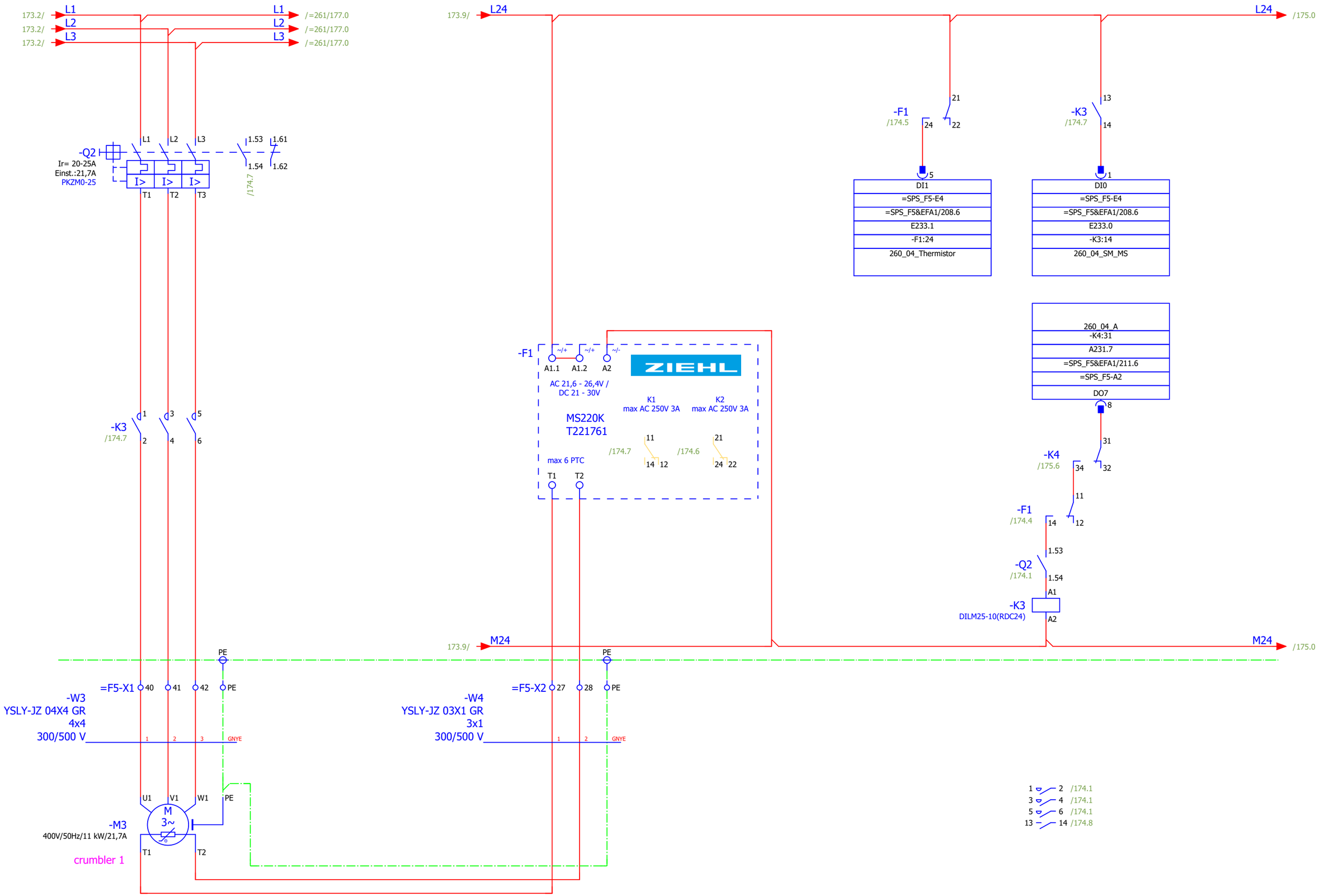

173 175

			Date	12.12.2019	Mixed feed plant Golden Poultry	BEYTEC ... your gateway to success	activation crumbler 1 motor 2	= 260	
			Ed.	willen				+ F25	
			Appr		Field 5			1 : 1 Part II	Page 174
Modification	Date	Name	Original	V:\EPLAN\Projekte\Company\Replace\Beytec\2018\Feed Mill Alssad.elk	Replaced by				Page 605

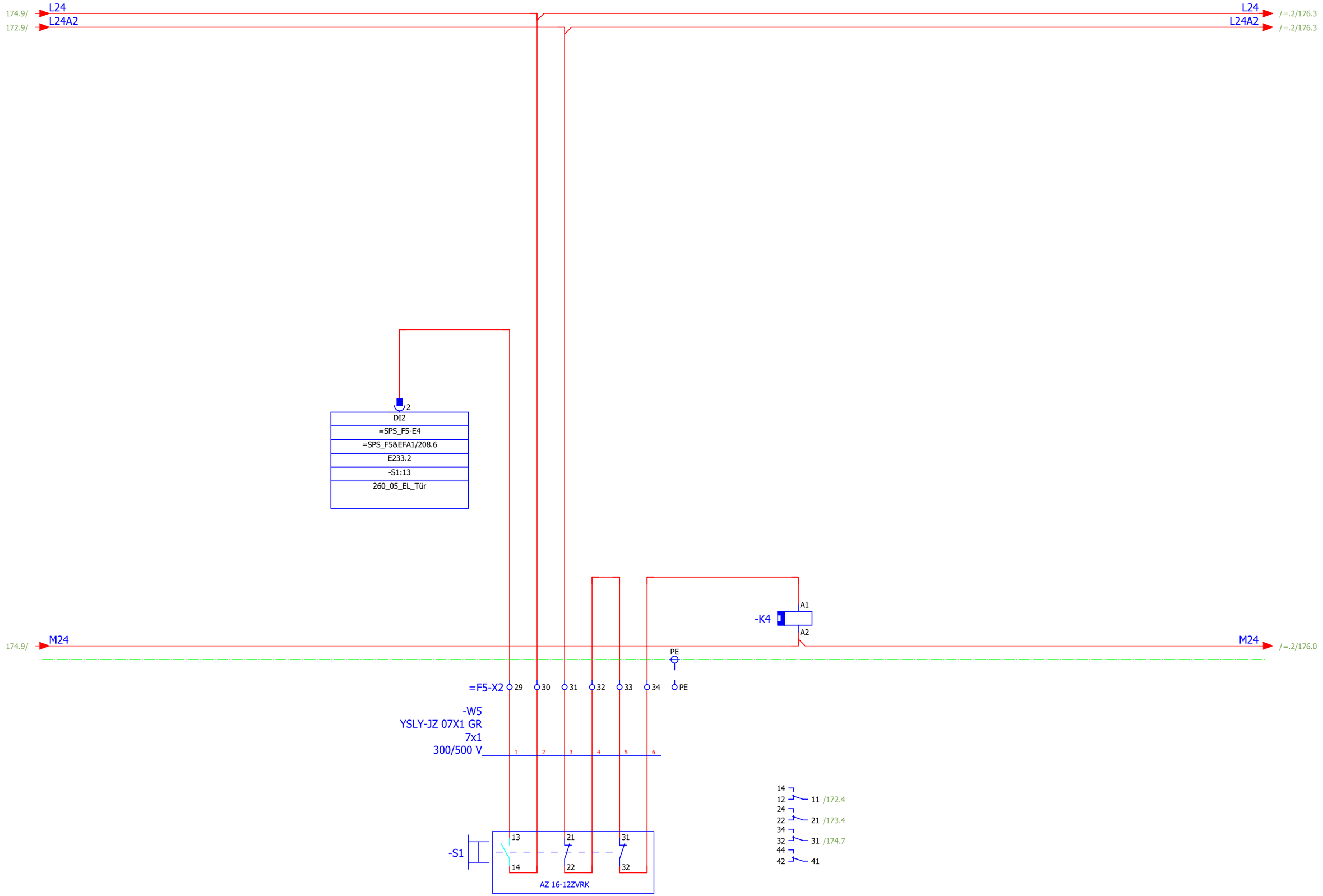

saftey switch door

			Date	12.12.2019	Mixed feed plant Golden Poultry	BEYTEC ... your gateway to success	door switch crumbler 1		= 260
			Ed.	willen					+ F25
			Appr		Field 5			1 : 1	Part II
Modification	Date	Name	Original	V:\EPLAN\Projekte\Company\Beytec\2018\Feed Mill Alssad.elk	Replaced by				Page 175 / Page 605

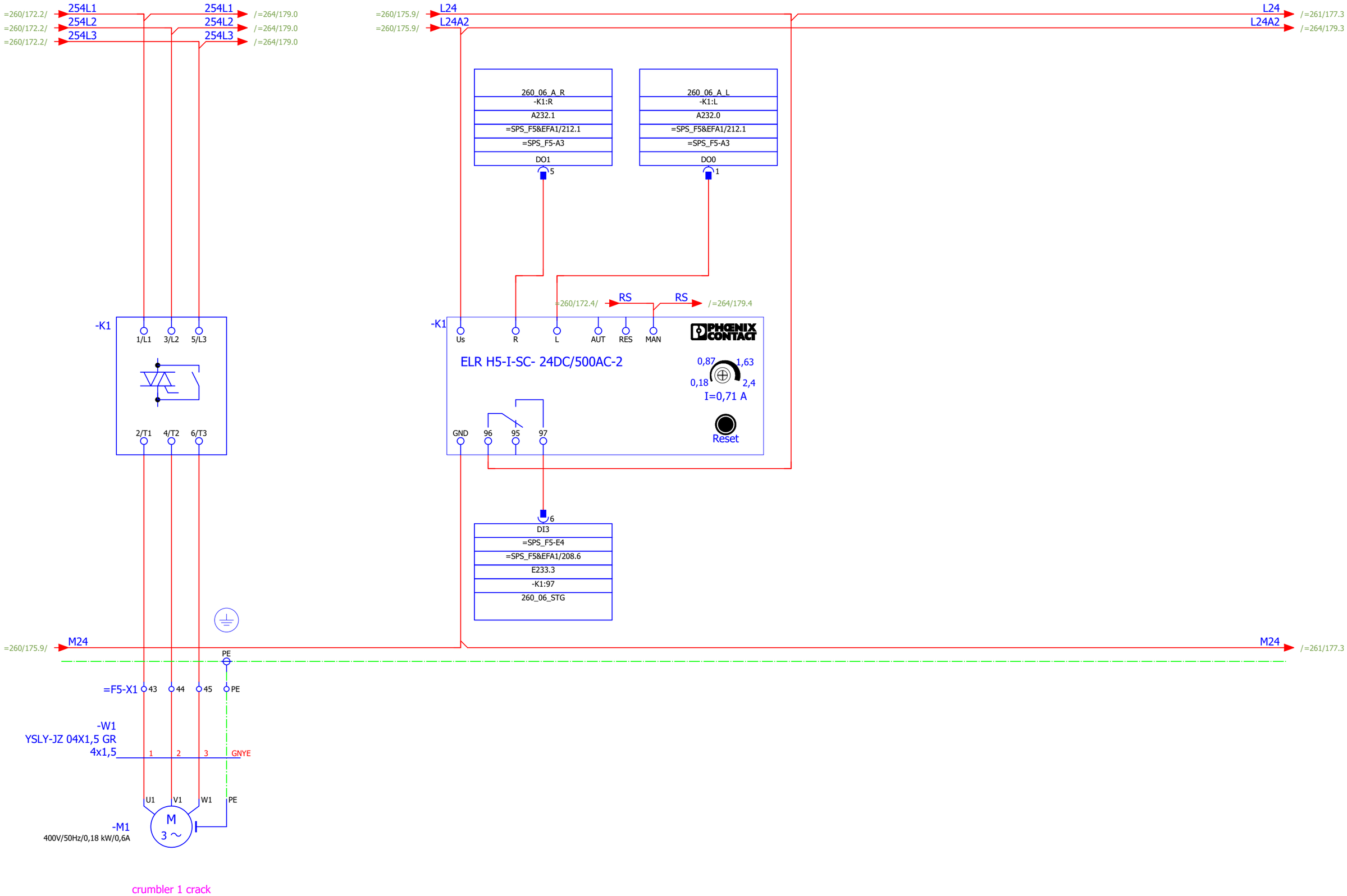

crumbler 1 crack

=260+F27/396

+F27/397

			Date	12.12.2019	Mixed feed plant Golden Poultry	BEYTEC ... your gateway to success	roller adjustment crumbler 1	= 260.2	
			Ed.	willen				+ F25	
			Appr		Field 5			1 : 1 Part II	Page 176
Modification	Date	Name	Original	V:\EPLAN\Projekte\Company\Replace\Beytec\2018\Feed Mill Alssad.elk	Replaced by				Page 605

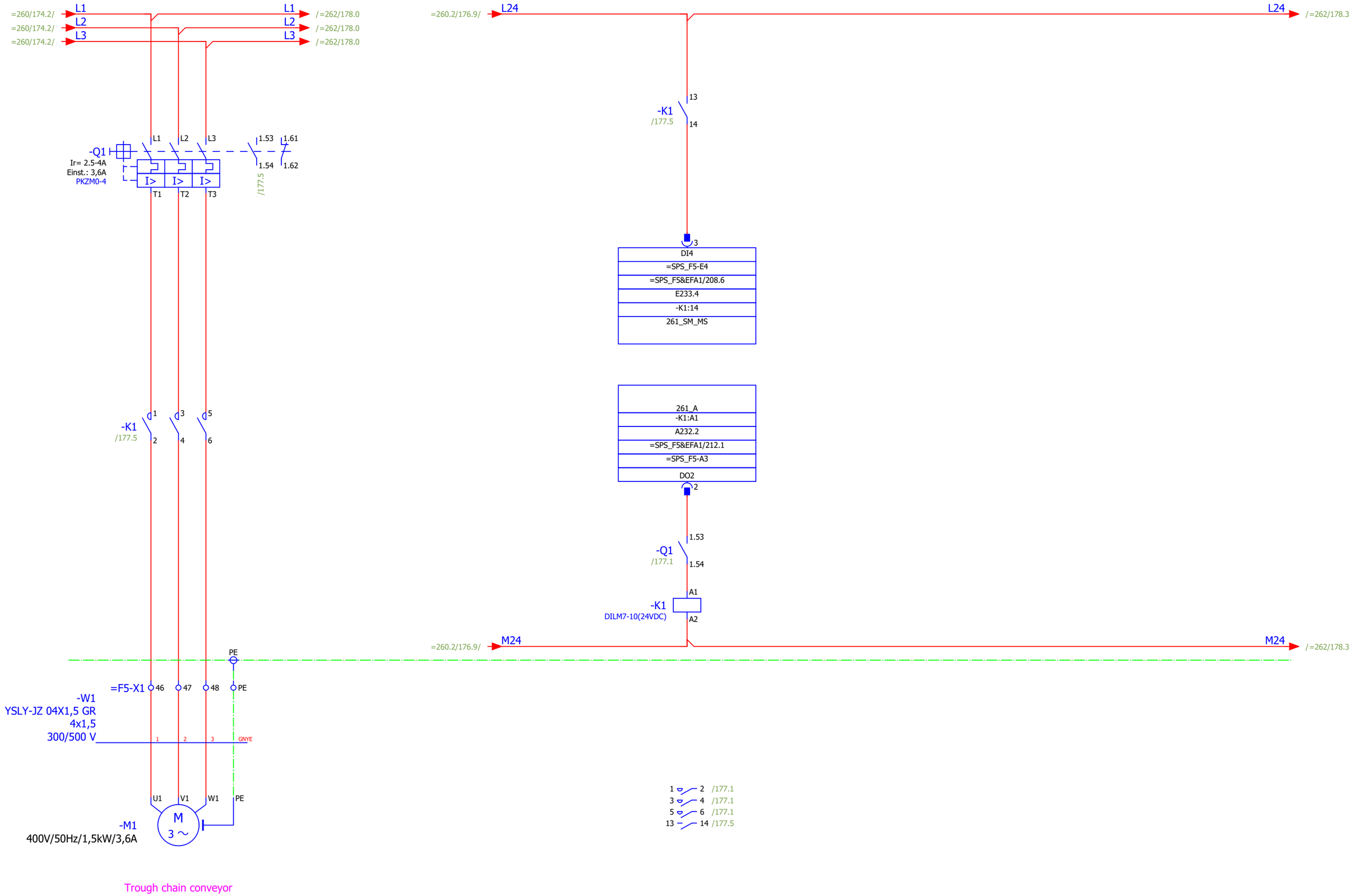

Trough chain conveyor

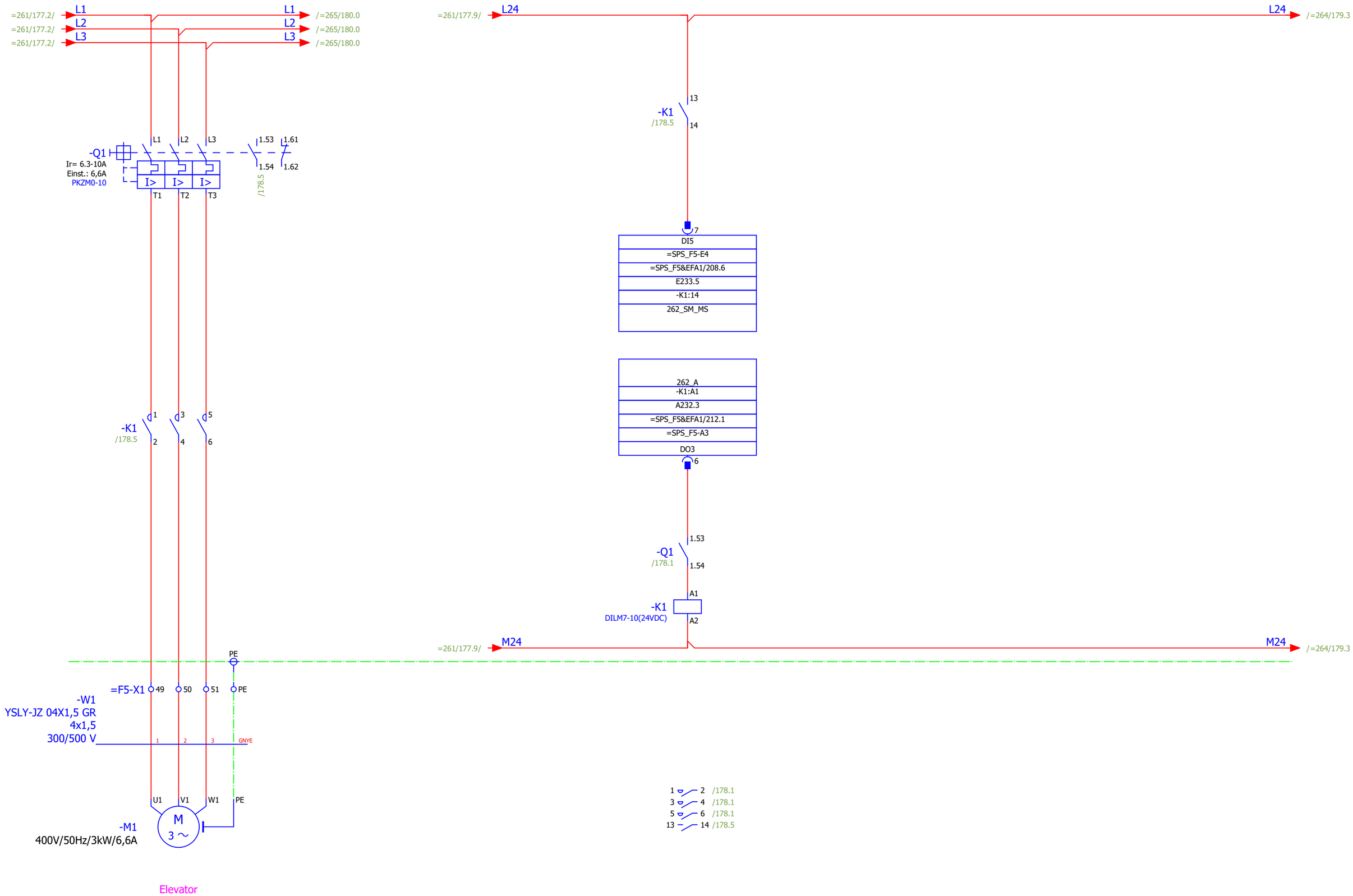

Elevator

=261+F27/398

+F27/399

			Date	12.12.2019	Mixed feed plant Golden Poultry	BEYTEC ... your gateway to success	load circuit elevator	= 262	
			Ed.	willen				+ F25	
			Appr		Field 5			1 : 1 Part II	Page 178
Modification	Date	Name	Original	V:\EPLAN\Projekte\Company\Replace\Beytec\2018\Feed Mill Alssad.elk	Replaced by				Page 605

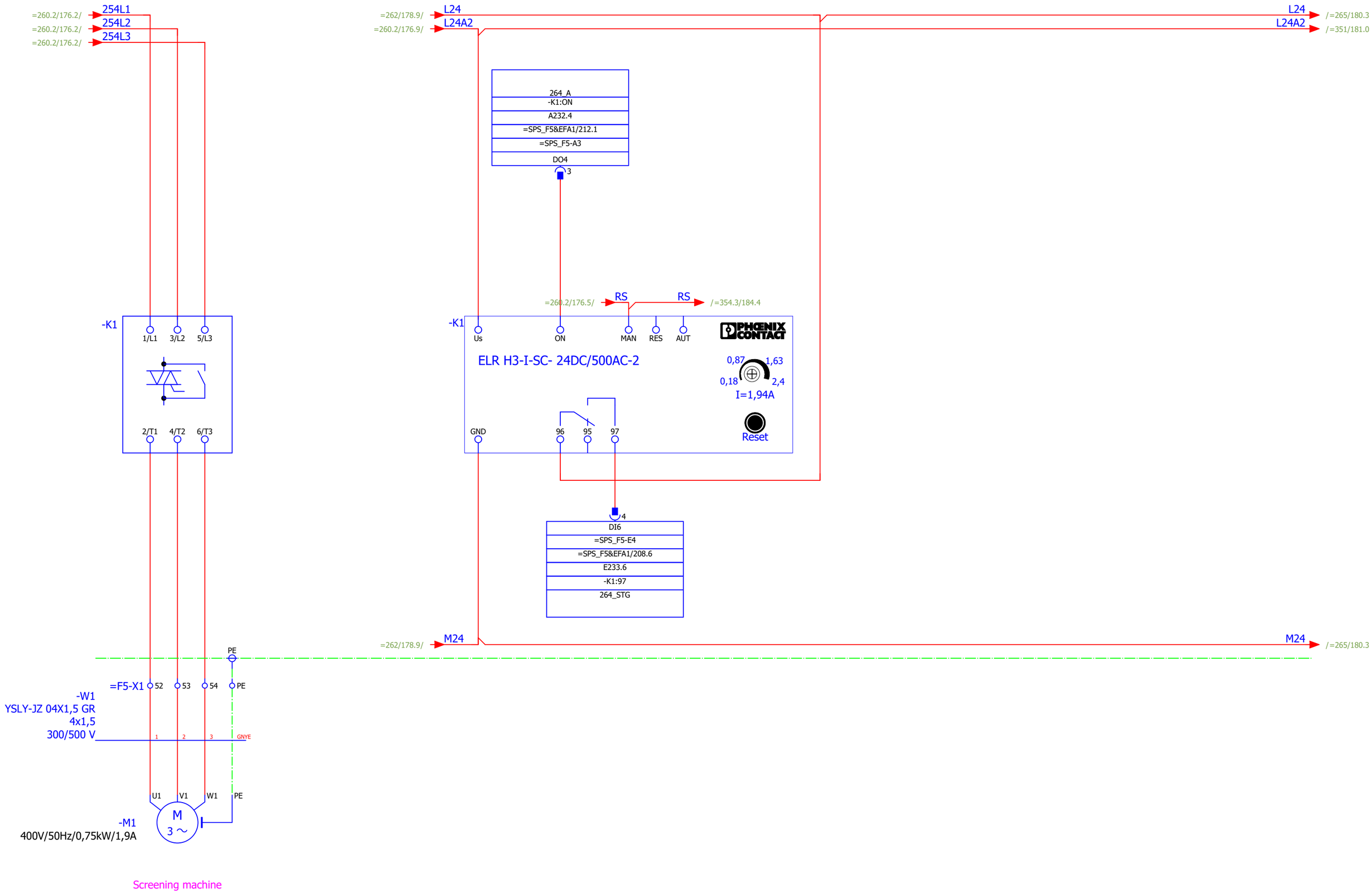

=263+F27/401

+F27/402

			Date	12.12.2019	Mixed feed plant Golden Poultry	BEYTEC ... your gateway to success	activation screening machine	= 264	
			Ed.	willen	Field 5			+ F25	
			Appr				1 : 1	Part II	Page 179
Modification	Date	Name	Original	V:\EPLAN\Projekte\Company\Beytec\2018\Feed Mill Alssad.elk	Replaced by				Page 605

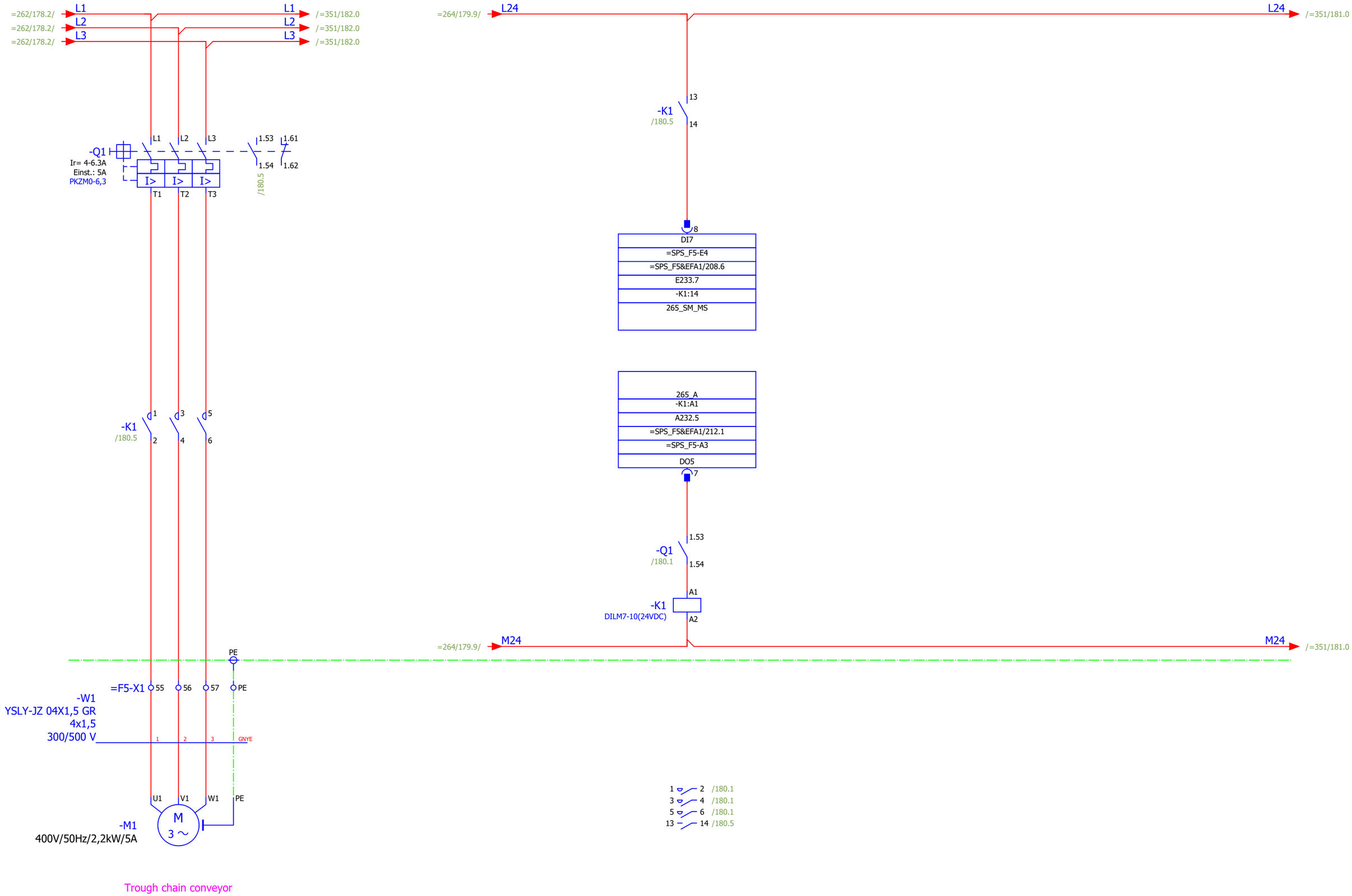

Trough chain conveyor

=264+F27/402

+F27/403

			Date	12.12.2019	Mixed feed plant Golden Poultry	BEYTEC	load circuit trough chain conveyor		= 265	
			Ed.	willen	Field 5	... your gateway to success			+ F25	
			Appr					1 : 1	Part II	Page 180
Modification	Date	Name	Original	V:\EPLAN\Projekte\Company\Beytec\2018\Feed Mill Alssad.elk	Replaced by					Page 605

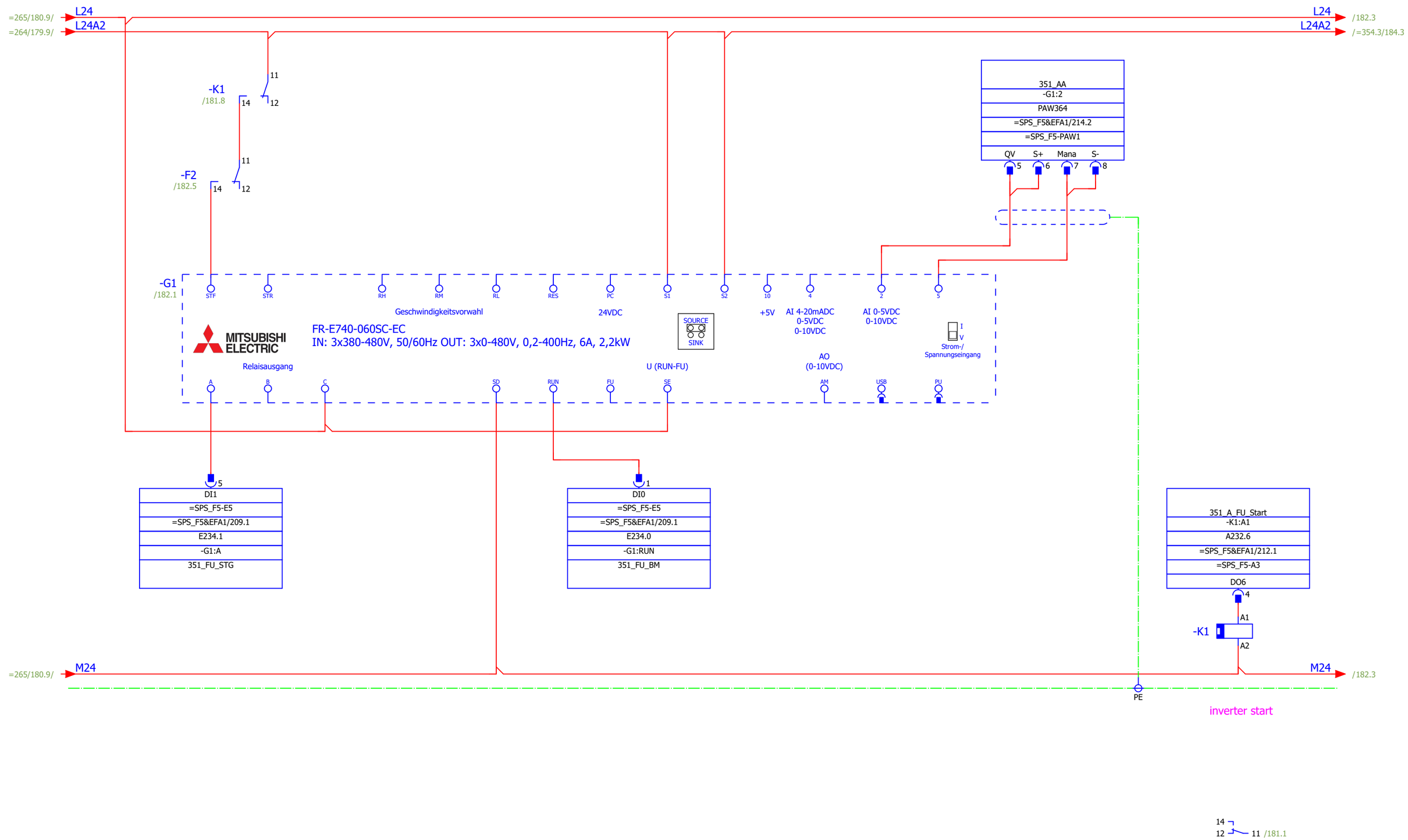

=265+F27/403

182

			Date	12.12.2019	Mixed feed plant Golden Poultry	BEYTEC	screw feeder	= 351	
			Ed.	willen				+ F25	
			Appr		Field 5	... your gateway to success		1 : 1	Part II	Page 181
Modification	Date	Name	Original	V:\EPLAN\Projekte\Company\Beytec\2018\Feed Mill Alssad.elk	Replaced by					Page 605

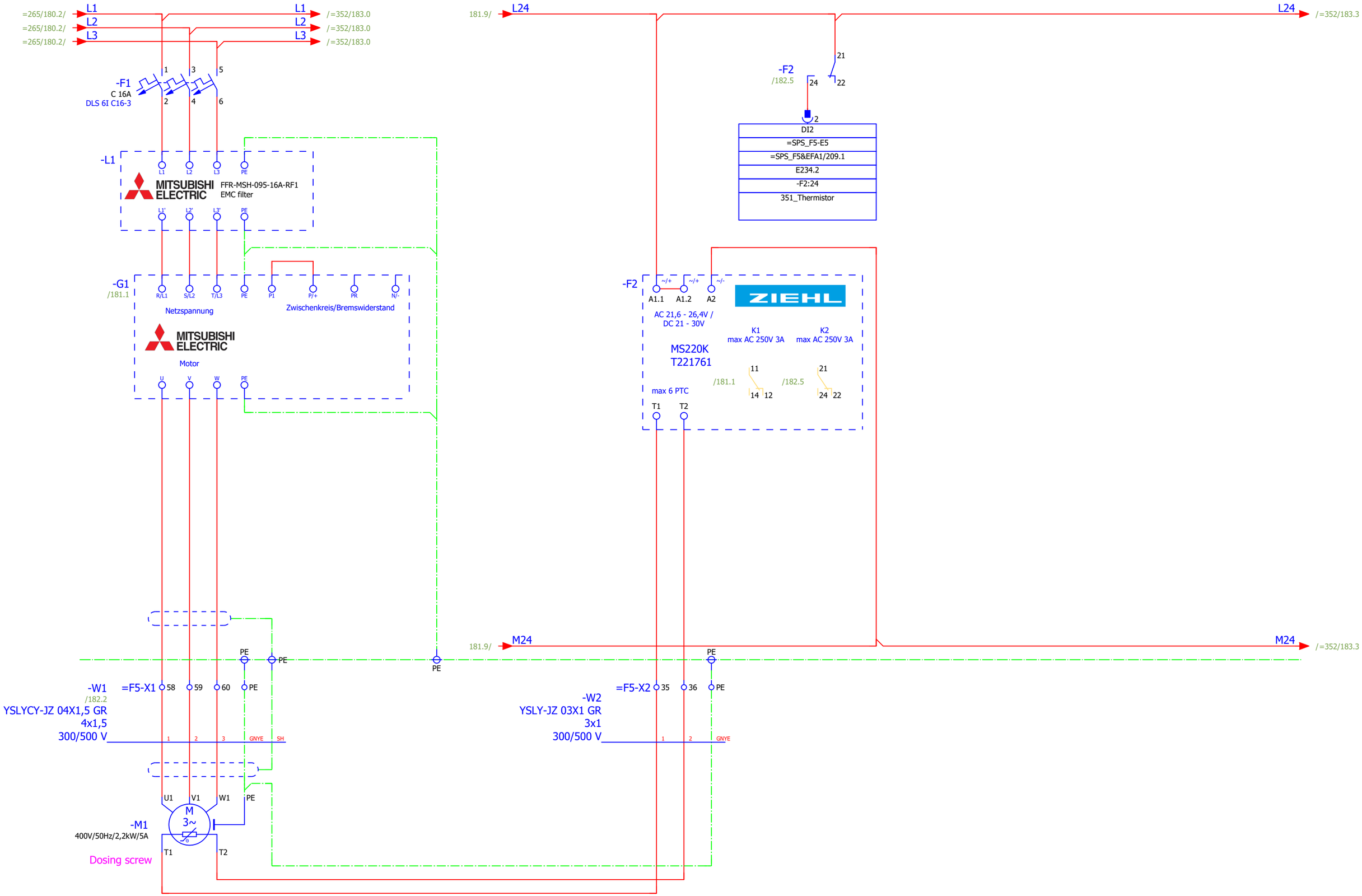

181

+F27/404

			Date	12.12.2019	Mixed feed plant Golden Poultry	BEYTEC ... your gateway to success	screw feeder	= 351	
			Ed.	willen				+ F25	
			Appr		Field 5			1 : 1 Part II	Page 182
Modification	Date	Name	Original	V:\EPLAN\Projekte\Company\Replace\Beytec\2018\Feed Mill Alssad.elk	Replaced by				Page 605

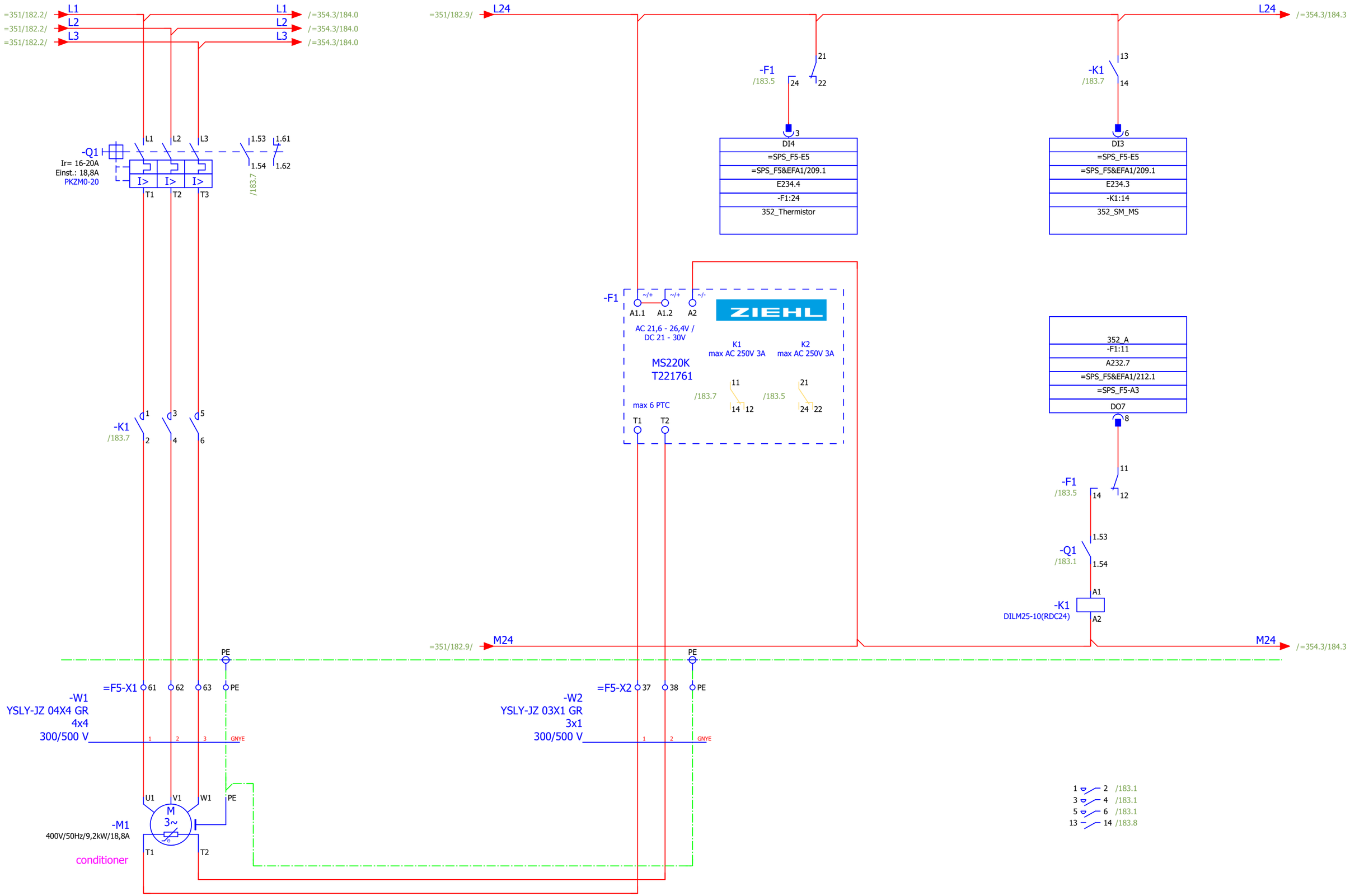

=351+F27/404

=354++A2+PP22/540

			Date	12.12.2019	Mixed feed plant Golden Poultry	BEYTEC	conditioner	= 352	
			Ed.	willen				+ F25	
			Appr		Field 5	... your gateway to success		1 : 1 / Part II	Page 183
Modification	Date	Name	Original	V:\EPLAN\Projekte\Company\Replace\Beytec\2018\Feed Mill Alssad.elk	Replaced by				Page 605

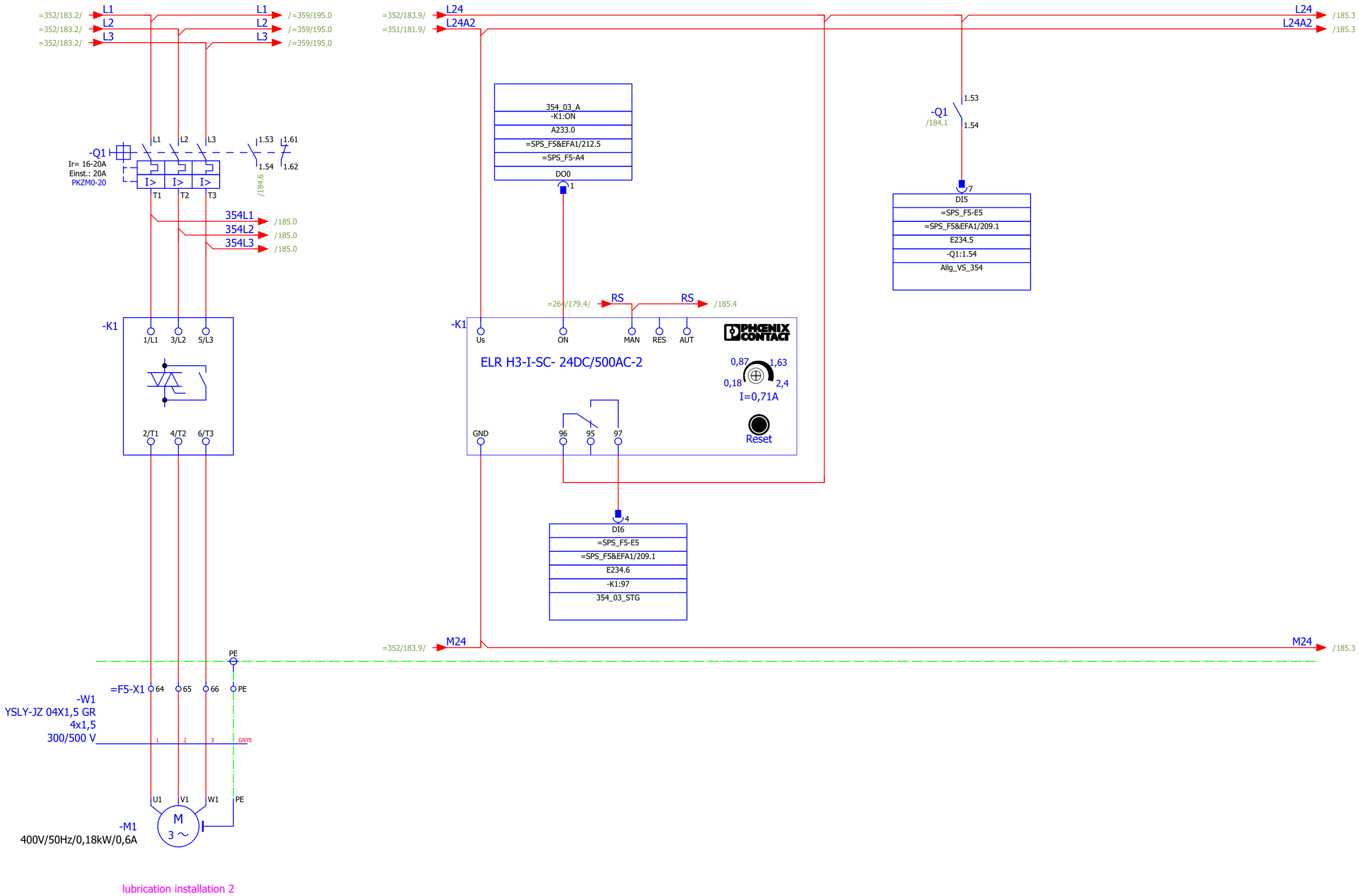

lubrication installation 2

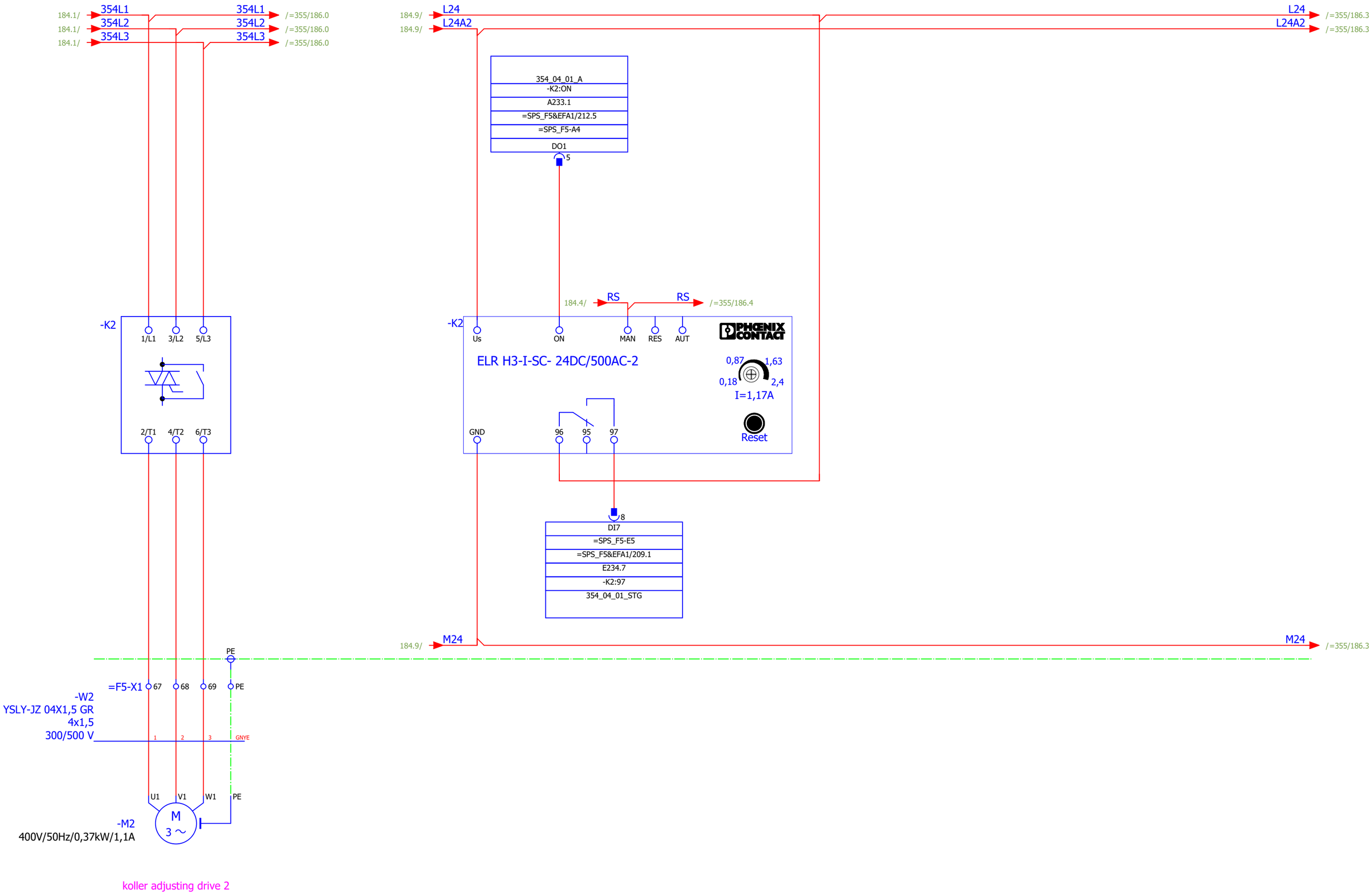

			Date	12.12.2019	Mixed feed plant Golden Poultry	BEYTEC ... your gateway to success	activation Koller adjustment pellet press 2	= 354.3	
			Ed.	willen	Field 5			+ F25	
			Appr				1 : 1	Part II	Page 185
Modification	Date	Name	Original	V:\EPLAN\Projekte\Company\Beytec\2018\Feed Mill Alssad.elk	Replaced by				Page 605

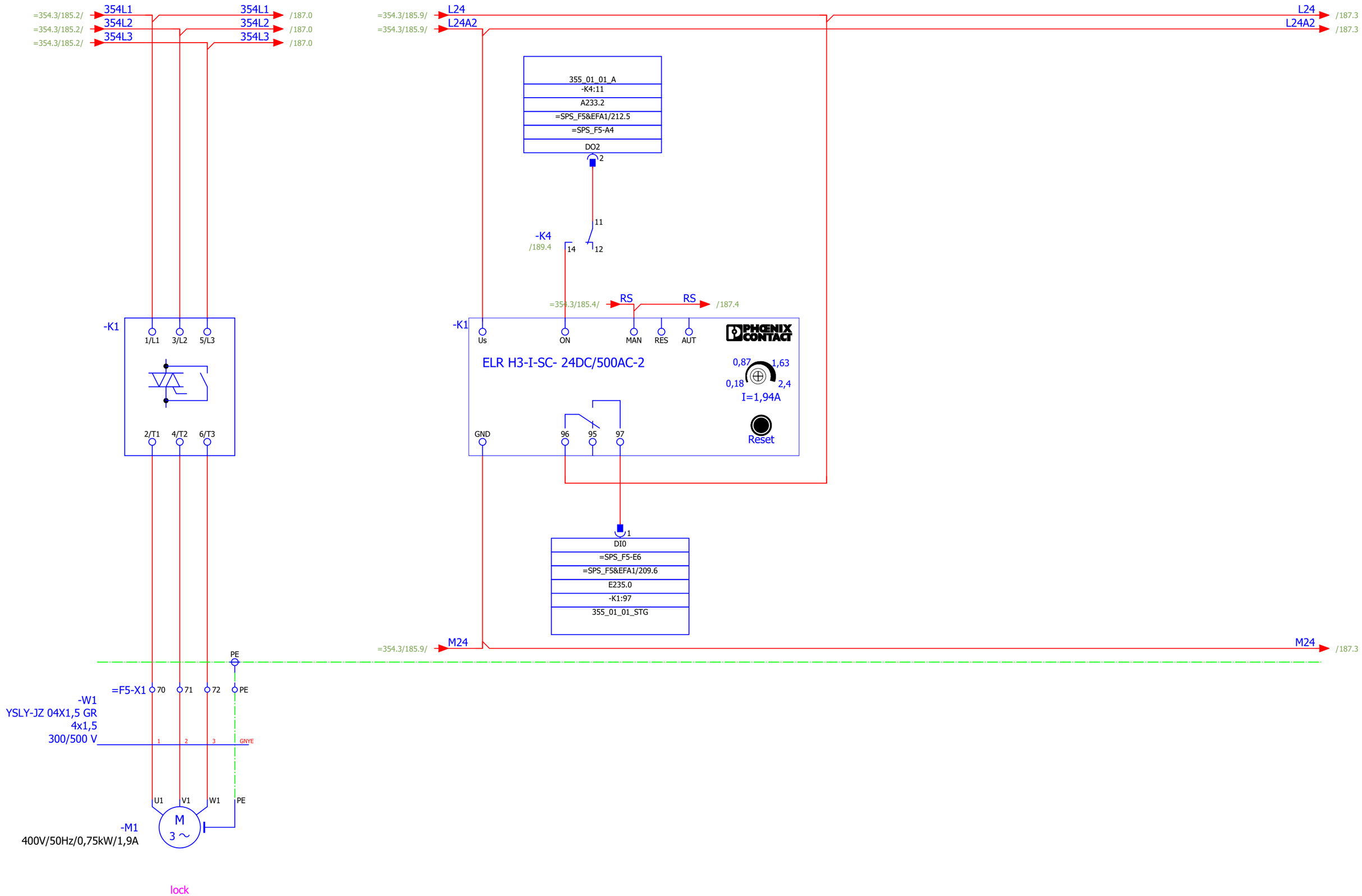

=354.3/185

187

			Date	12.12.2019	Mixed feed plant Golden Poultry	BEYTEC ... your gateway to success	activation lock cooler 2		= 355	
			Ed.	willen	Field 5				+ F25	
			Appr					1 : 1	Part II	Page 186
Modification	Date	Name	Original	V:\EPLAN\Projekte\Company\Beytec\2018\Feed Mill Alssad.elk	Replaced by					Page 605

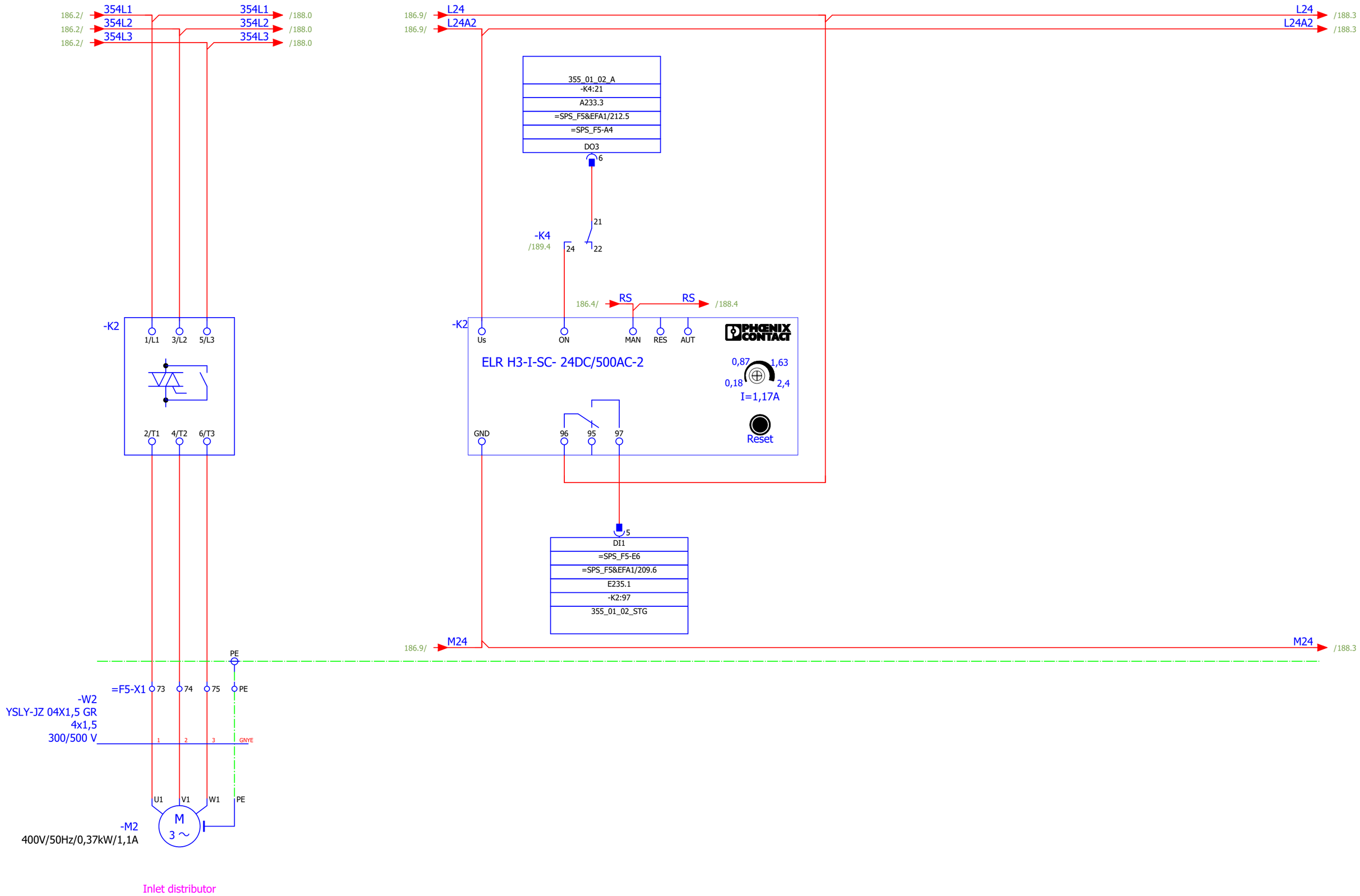

186 188

			Date	12.12.2019	Mixed feed plant Golden Poultry	BEYTEC	activation inlet distributor 1		= 355	
			Ed.	willen	Field 5	... your gateway to success			+ F25	
			Appr					1 : 1	Part II	Page 187
Modification	Date	Name	Original	V:\EPLAN\Projekte\Company\Beytec\2018\Feed Mill Alssad.elk	Replaced by					Page 605

Replaced by

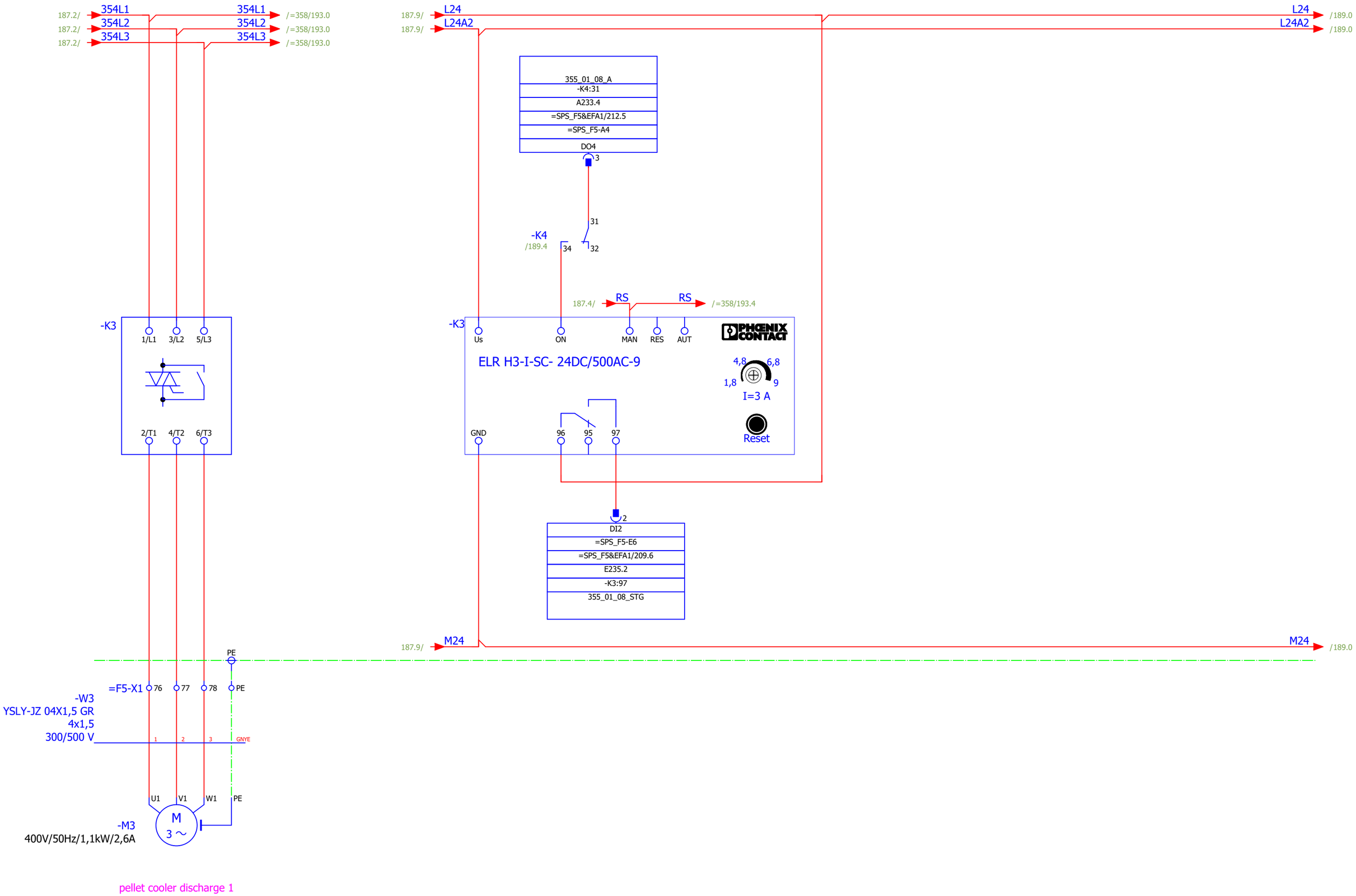

187

189

			Date	12.12.2019	Mixed feed plant Golden Poultry	BEYTEC ... your gateway to success	activation pellet cooler discharge 1	= 355	
			Ed.	willen	Field 5			+ F25	
			Appr				1 : 1	Part II	Page 188
Modification	Date	Name	Original	V:\EPLAN\Projekte\Company\Beytec\2018\Feed Mill Alssad.elk	Replaced by				Page 605

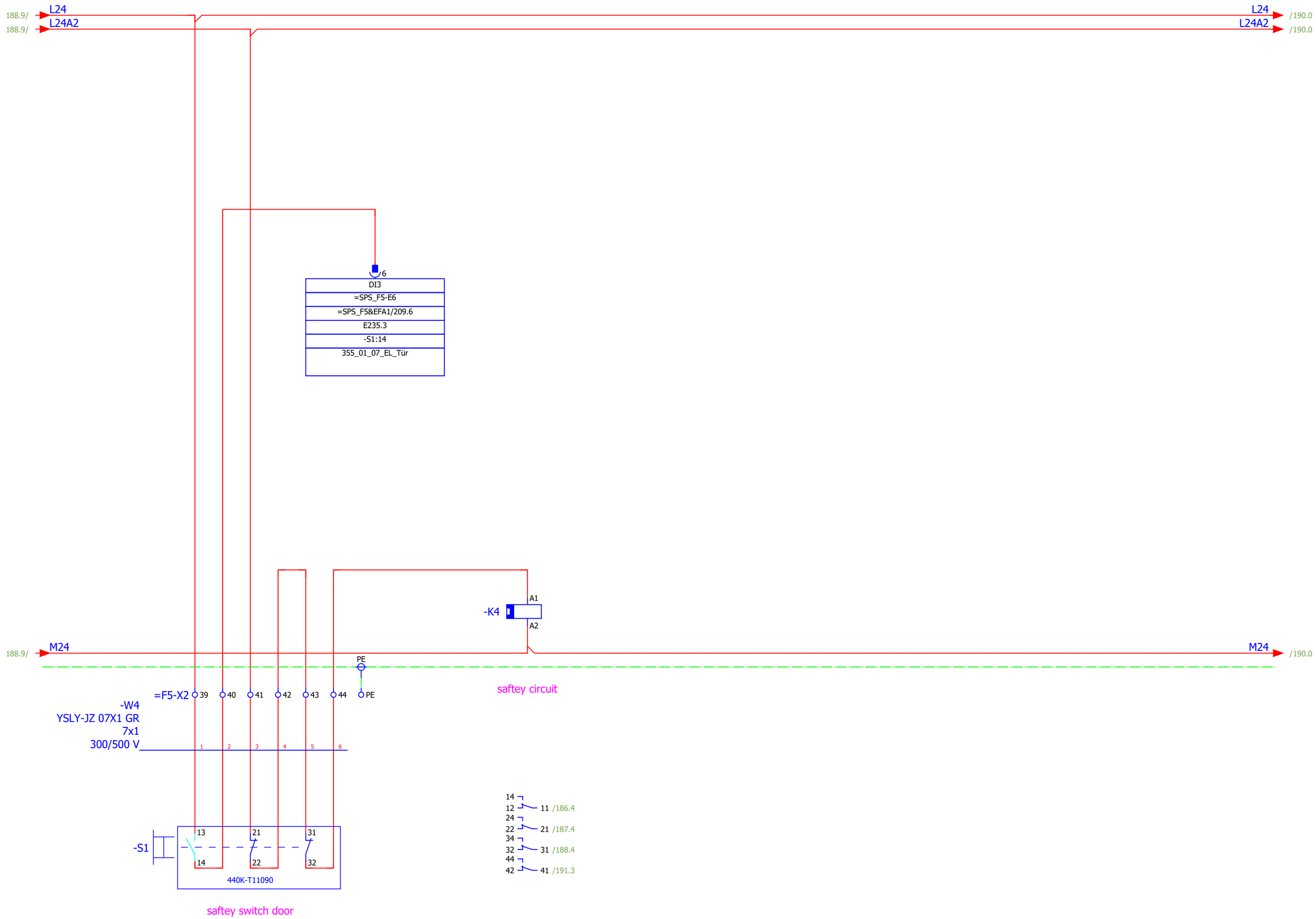

188 190

			Date	12.12.2019	Mixed feed plant Golden Poultry	BEYTEC ... your gateway to success	door switch cooler 1	= 355	
			Ed.	willen				+ F25	
			Appr		Field 5		1 : 1	Part II	Page 189
Modification	Date	Name	Original	V:\EPLAN\Projekte\Company\Replace\Beytec\2018\Feed Mill Alssad.elk	Replaced by				Page 605

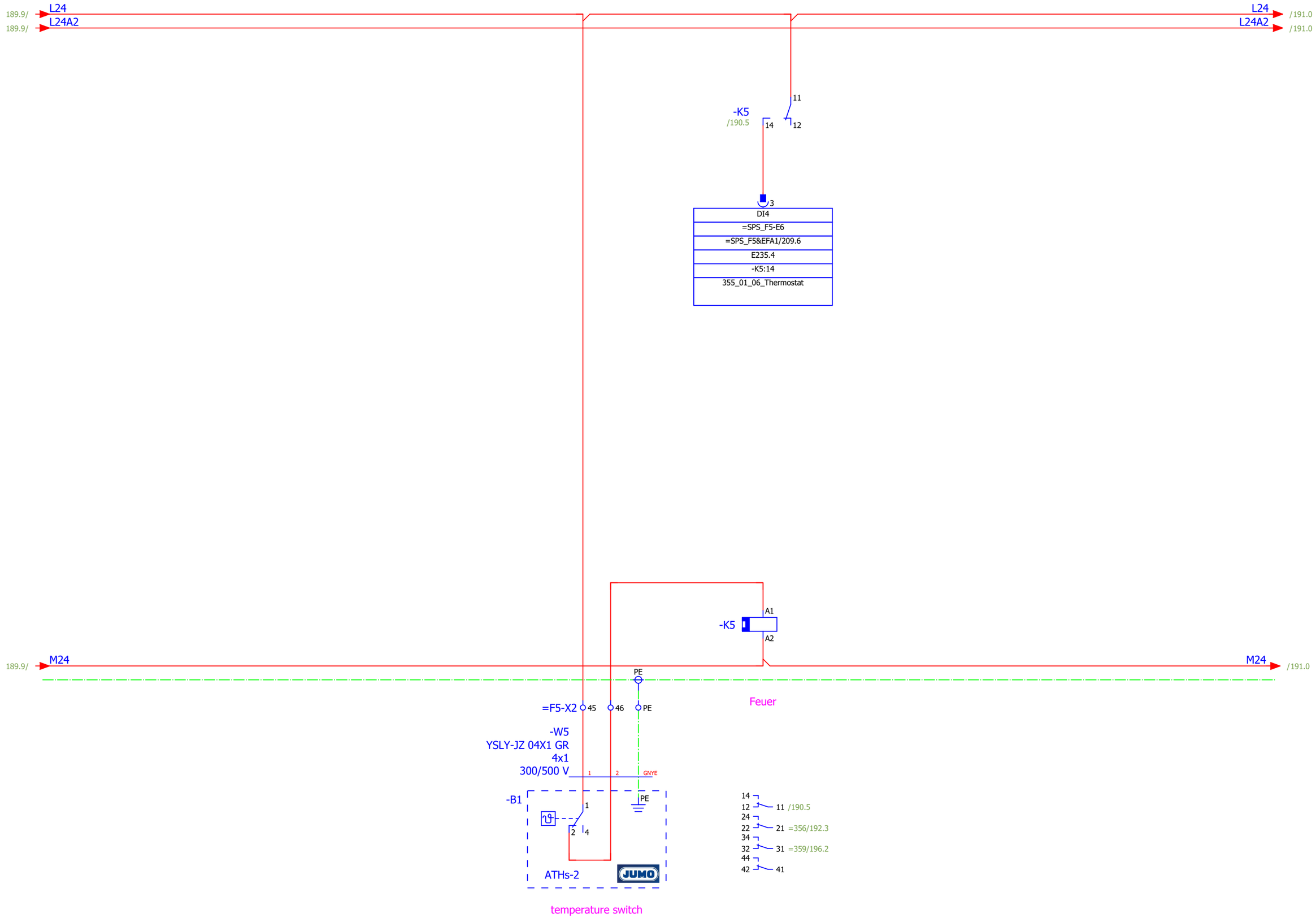

			Date	12.12.2019	Mixed feed plant Golden Poultry	BEYTEC ... your gateway to success	temperature monitoring cooler 1	= 355	
			Ed.	willen				+ F25	
			Appr		Field 5		1 : 1	Part II	Page 190
Modification	Date	Name	Original	V:\EPLAN\Projekte\Company\Replace\Beytec\2018\Feed Mill Alssad.elk	Replaced by				Page 605

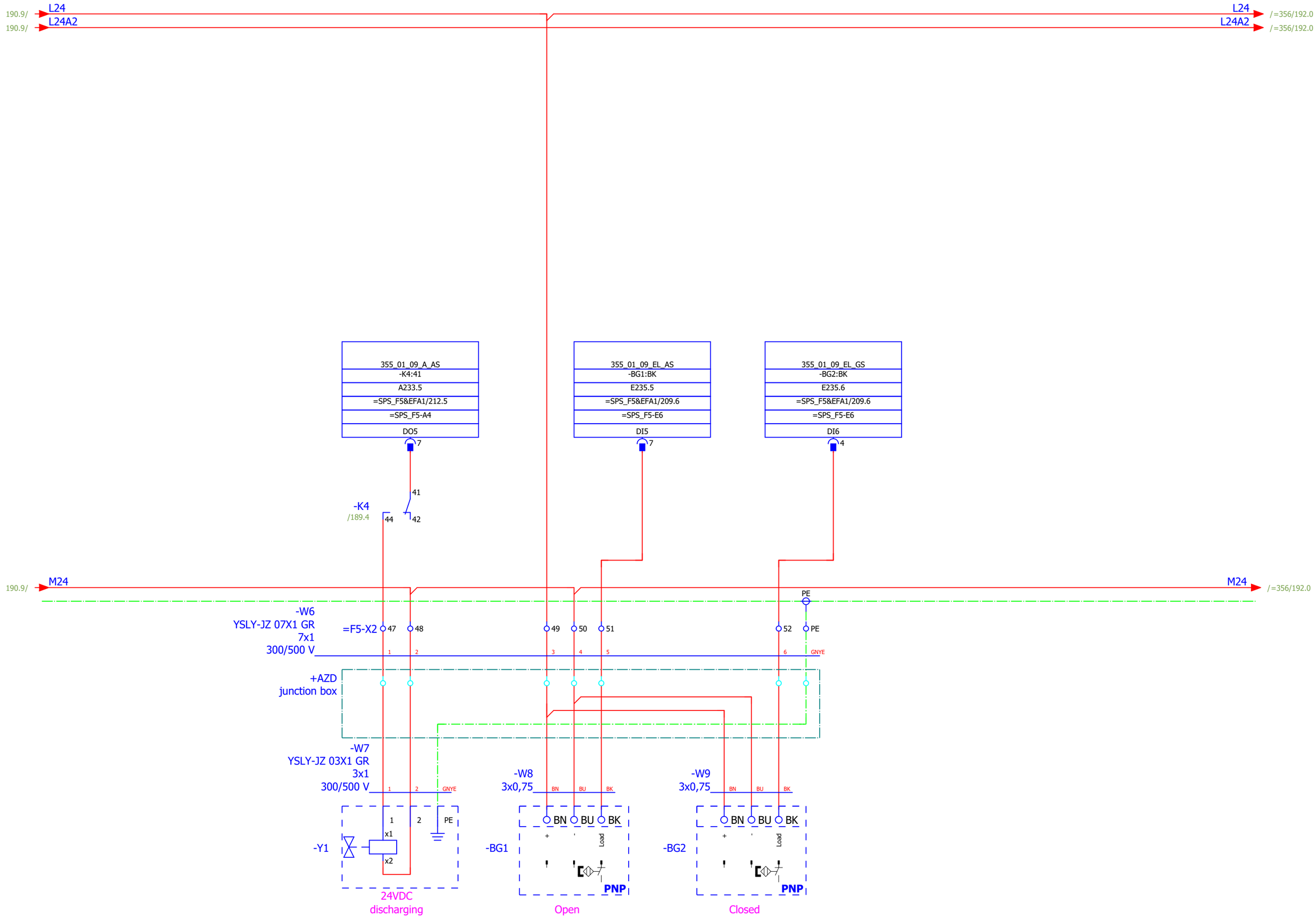

			Date	12.12.2019	Mixed feed plant Golden Poultry	BEYTEC ... your gateway to success	pneumatic slide rest emptying cooler 1		= 355
			Ed.	willen					+ F25
			Appr		Field 5			1 : 1	Part II
Modification	Date	Name	Original	V:\EPLAN\Projekte\Company\Replace\Beytec\2018\Feed Mill Alssad.elk	Replaced by				Page 191
									Page 605

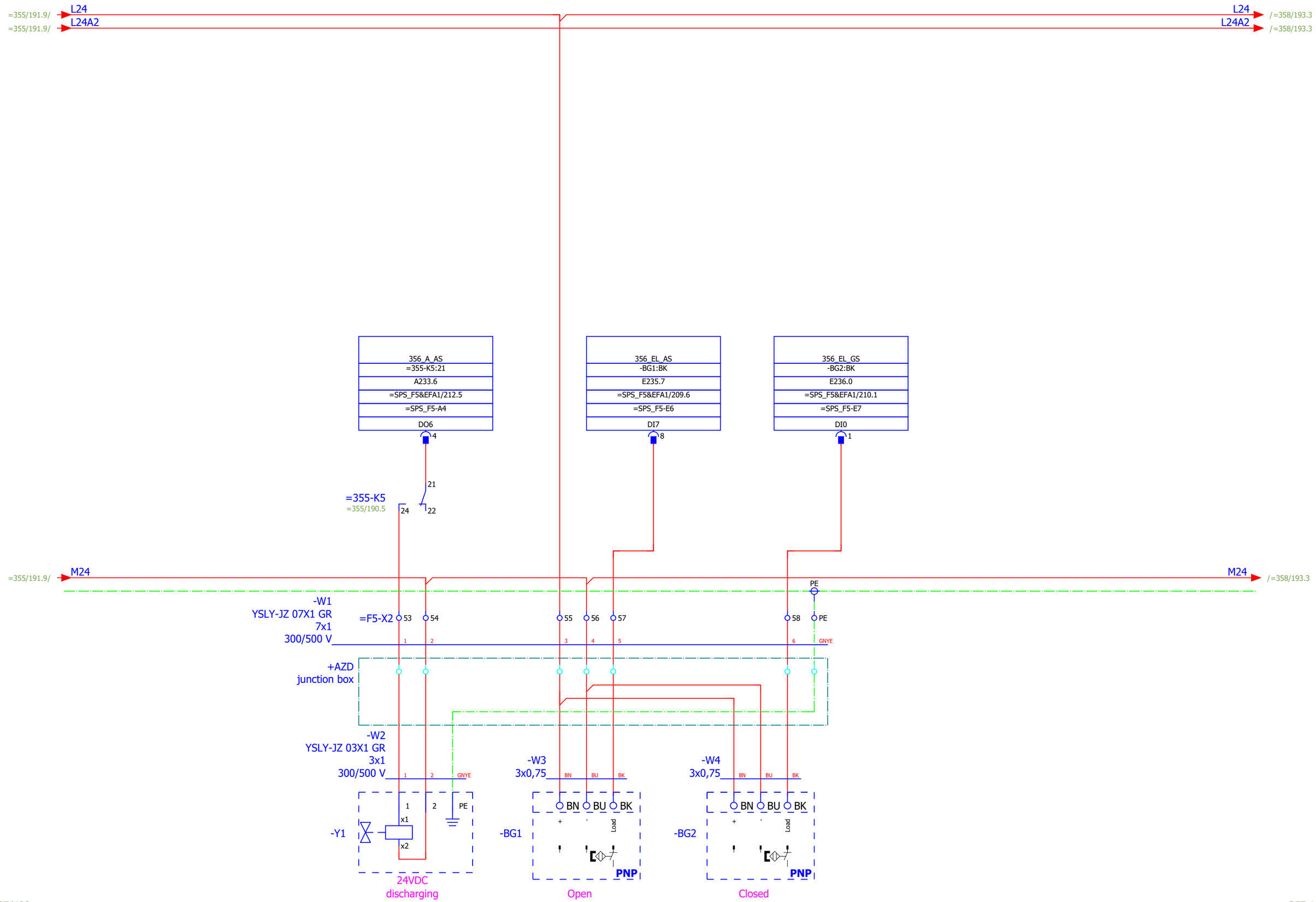

=355+F27/408

=357.1+F27/409

			Date	12.12.2019	Mixed feed plant Golden Poultry	BEYTEC ... your gateway to success	fire flap	= 356	
			Ed.	willen				+ F25	
			Appr		Field 5			1 : 1	Part II
Modification	Date	Name	Original	V:\EPLAN\Projekte\Company\Replace\Beytec\2018\Feed Mill Alssad.elk	Replaced by			Page 192	Page 605

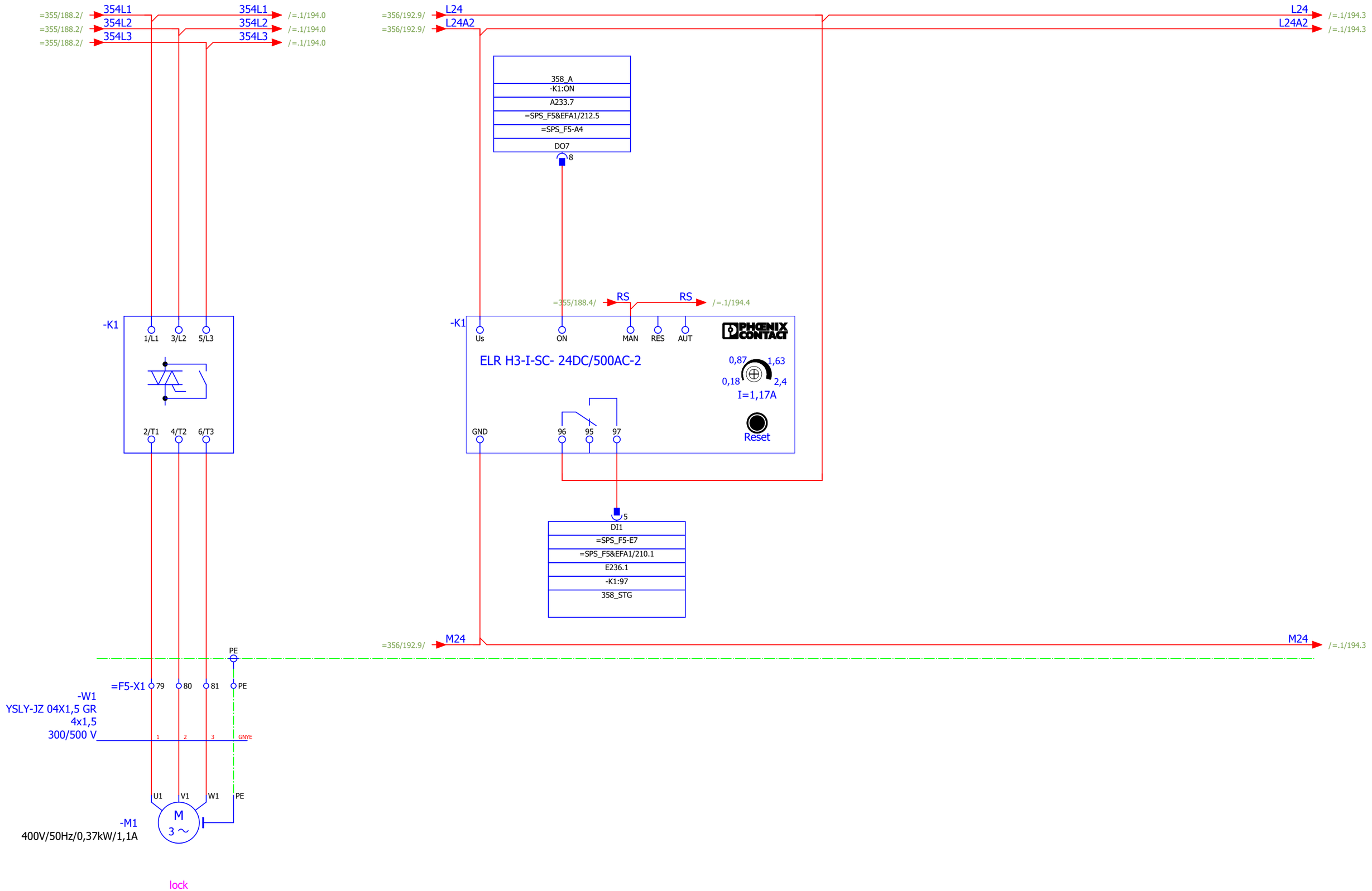

=357.1+F27/409

=.1/194

			Date	12.12.2019	Mixed feed plant Golden Poultry	BEYTEC ... your gateway to success	activation lock	= 358	
			Ed.	willen	Field 5			+ F25	
			Appr				1 : 1	Part II	Page 193
Modification	Date	Name	Original	V:\EPLAN\Projekte\Company\Beytec\2018\Feed Mill Alssad.elk	Replaced by				Page 605

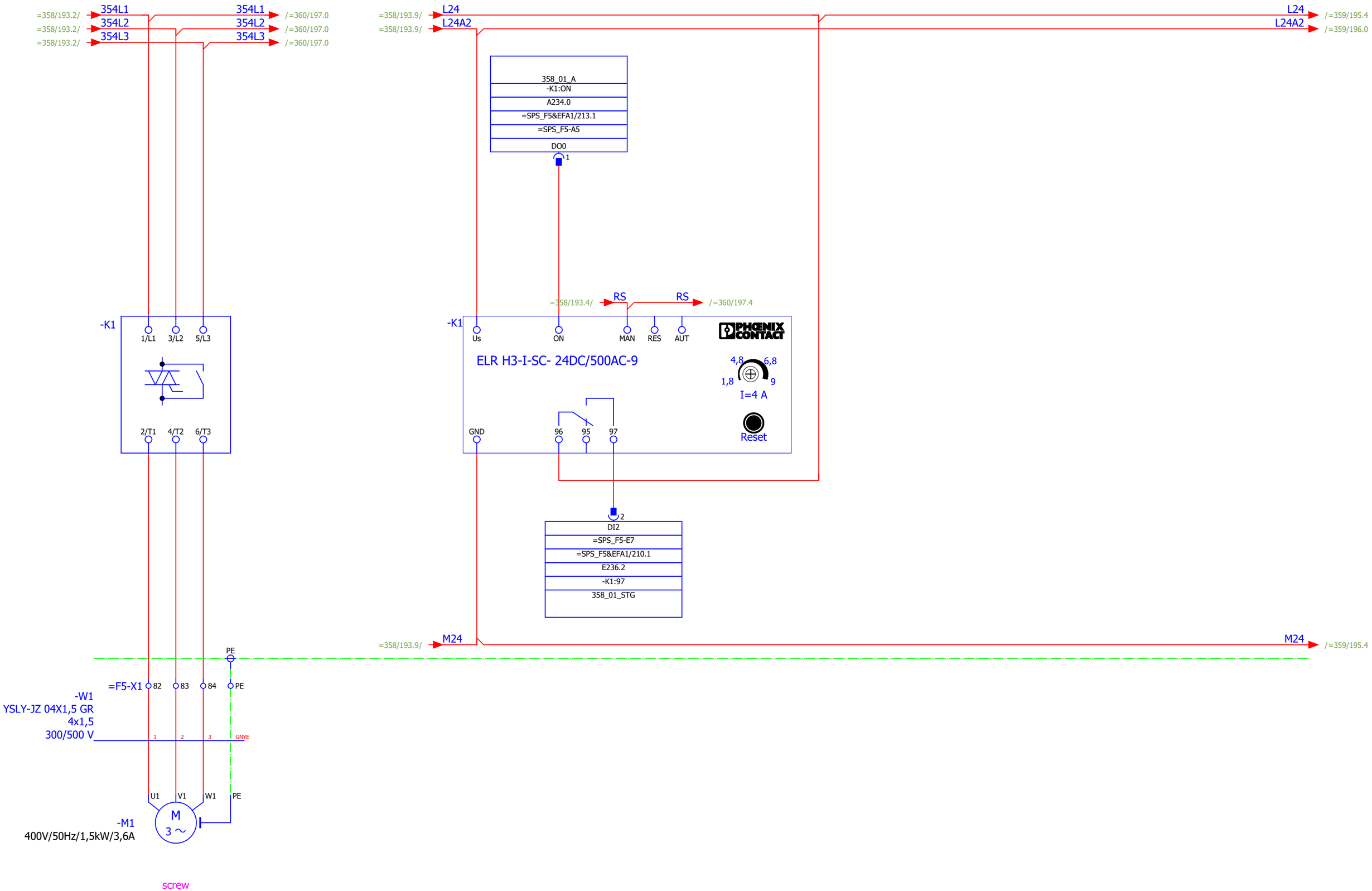

=358/193

+F27/410

			Date	12.12.2019	Mixed feed plant Golden Poultry	BEYTEC ... your gateway to success	activation screw		= 358.1	
			Ed.	willen	Field 5				+ F25	
			Appr					1 : 1	Part II	Page 194
Modification	Date	Name	Original	V:\EPLAN\Projekte\Company\Alpaca\Beytec\2018\Feed Mill Alssad.elk	Replaced by					Page 605

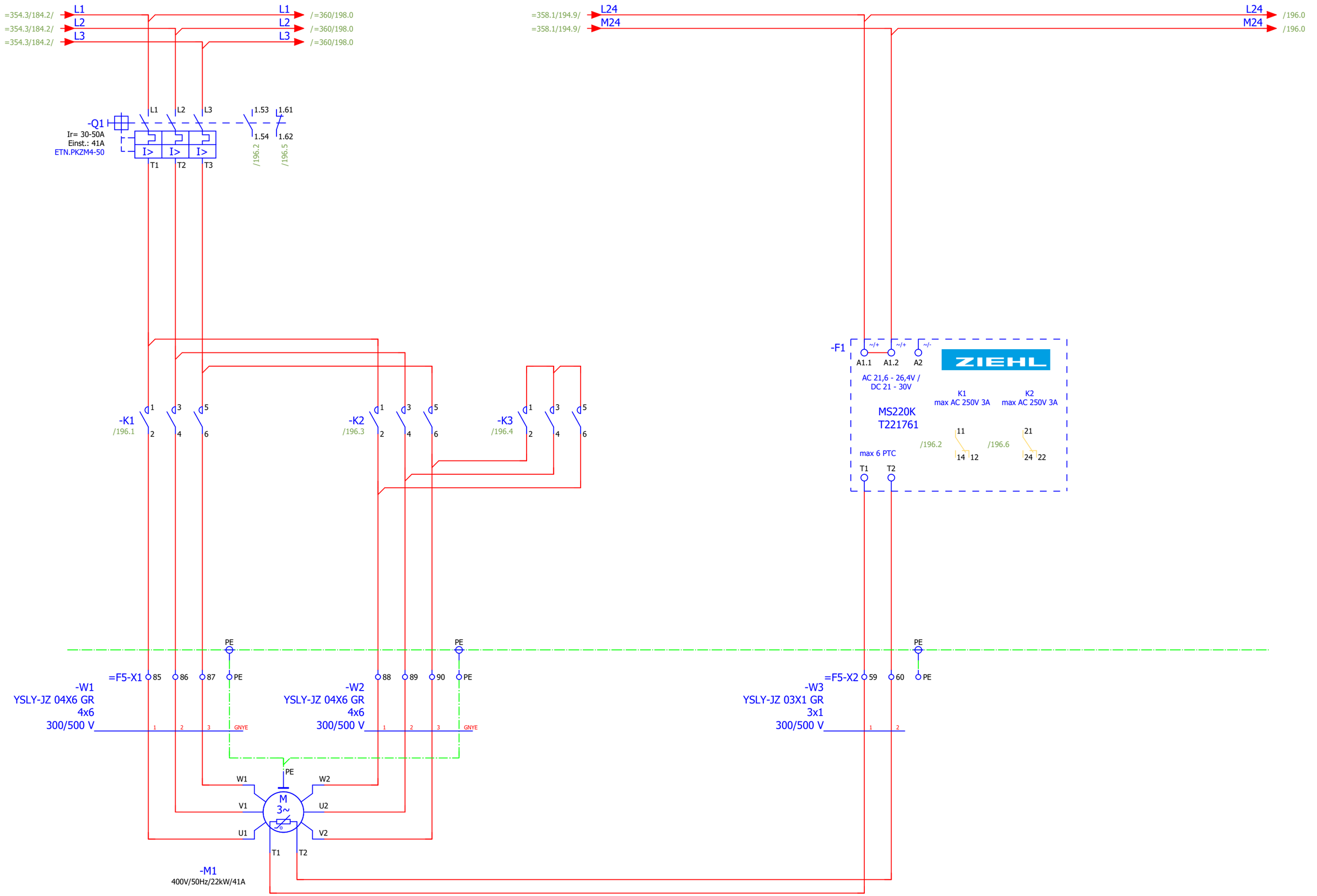
=354.3/184.2/
L1
L2
L3
/=360/198.0
=358.1/194.9/
L24
M24
/196.0
-Q1
Ir= 30-50A
Einst.: 41A
ETN.PKZM4-50
I>
T1
T2
T3
1.53
1.54
1.61
1.62
/196.2
/196.5
-K1
/196.1
-K2
/196.3
-K3
/196.4
-F1
~/+
~/-
A1.1
A1.2
A2
ZIEHL
AC 21,6 - 26,4V /
DC 21 - 30V
K1
max AC 250V 3A
K2
max AC 250V 3A
MS220K
T221761
max 6 PTC
/196.6
PE
=F5-X1
85
86
87
88
89
90
-W1
YSLY-JZ 04X6 GR
4x6
300/500 V
-W2
YSLY-JZ 04X6 GR
4x6
300/500 V
=F5-X2
59
60
-W3
YSLY-JZ 03X1 GR
3x1
300/500 V
GNYE
W1
W2
V1
U2
U1
V2
M
3~
-M1
400V/50Hz/22kW/41A

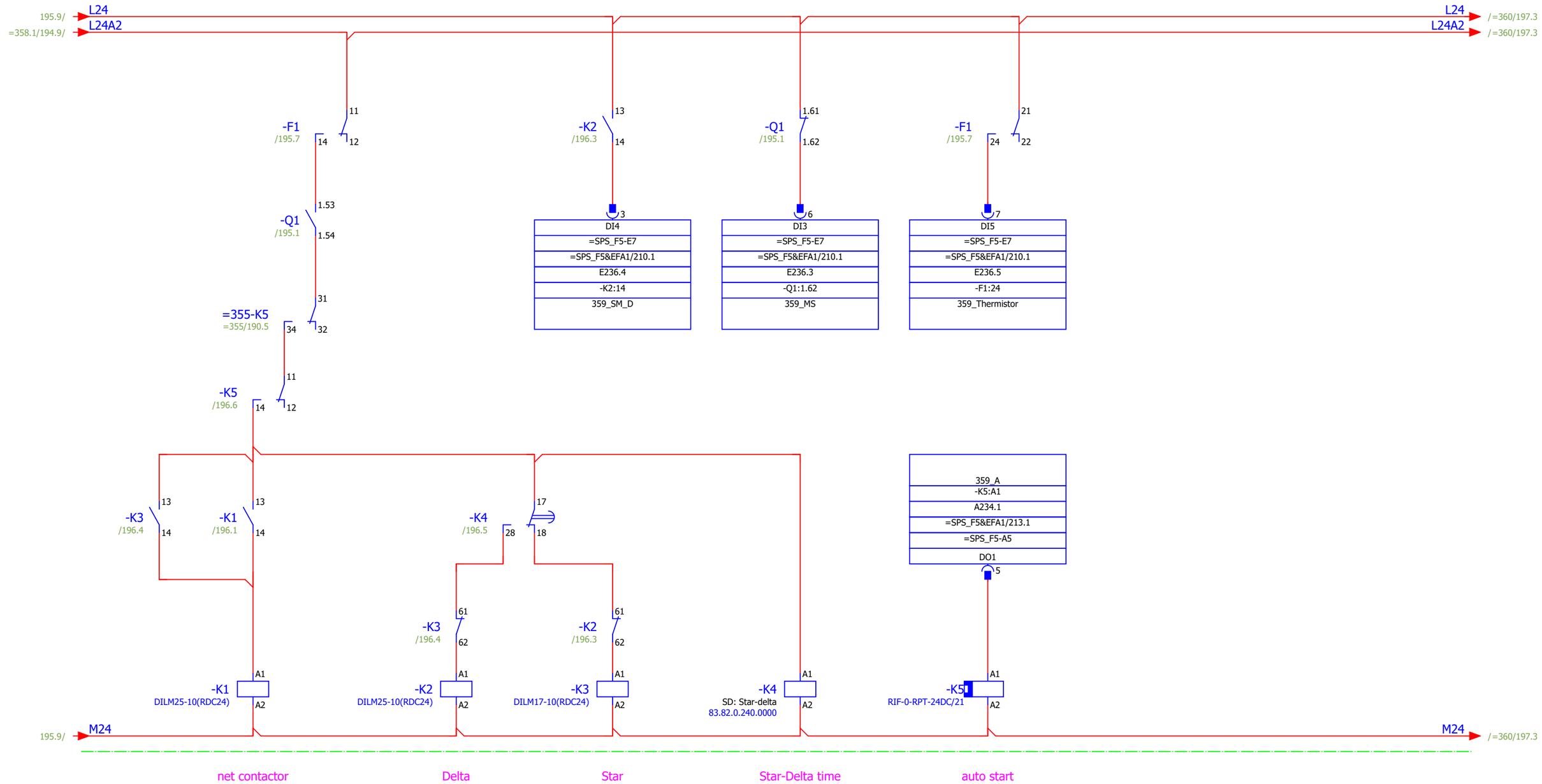

1 2 /195.1
3 4 /195.1
5 6 /195.1
13 14 /196.1

1 2 /195.2
3 4 /195.3
5 6 /195.3
13 14 /196.4
53 54
61 62 /196.4

1 2 /195.4
3 4 /195.4
5 6 /195.4
13 14 /196.1
53 54
61 62 /196.3

28
18 17 /196.3

14
12 11 /196.1

			Date	12.12.2019	Mixed feed plant Golden Poultry	BEYTEC ... your gateway to success	control circuit blower cyclone 2	= 359	
			Ed.	willen				+ F25	
			Appr		Field 5		1 : 1	Part II	Page 196
Modification	Date	Name	Original	V:\EPLAN\Projekte\Company\Beytec\2018\Feed Mill Alssad.elk	Replaced by				Page 605

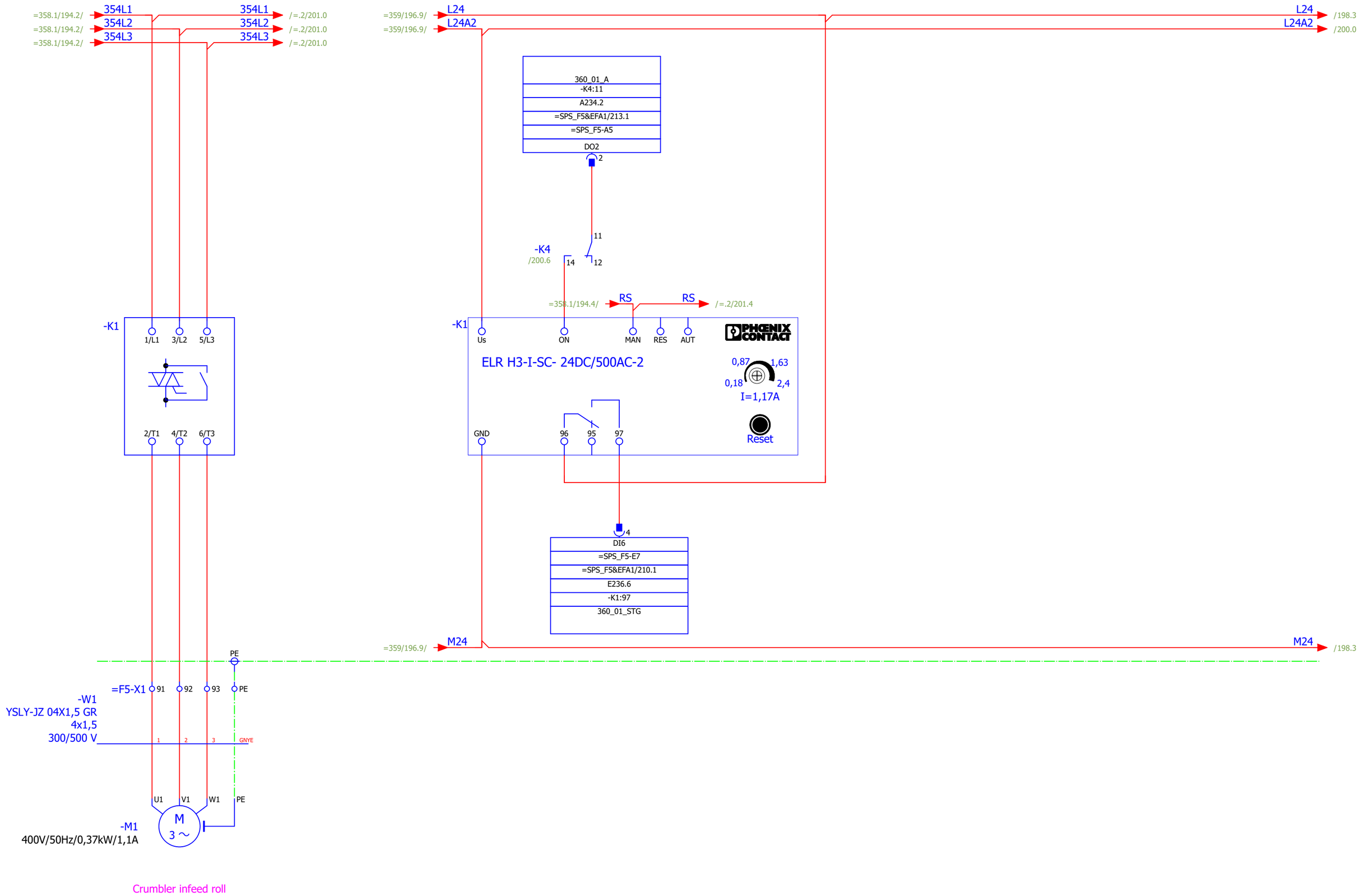
=358.1/194.2/ 354L1
=358.1/194.2/ 354L2
=358.1/194.2/ 354L3
354L1 /=.2/201.0
354L2 /=.2/201.0
354L3 /=.2/201.0
=359/196.9/ L24
=359/196.9/ L24A2
L24 /198.3
L24A2 /200.0
360_01_A
-K4:11
A234.2
=SPS_F5&EFA1/213.1
=SPS_F5-A5
DO2
2
11
-K4
/200.6
14
12
=358.1/194.4/ RS
RS /=.2/201.4
-K1
1/L1 3/L2 5/L3
2/T1 4/T2 6/T3
-K1
Us ON MAN RES AUT
PHOENIX CONTACT
ELR H3-I-SC- 24DC/500AC-2
0,87 1,63
0,18 2,4
I=1,17A
Reset
GND 96 95 97
4
DI6
=SPS_F5-E7
=SPS_F5&EFA1/210.1
E236.6
-K1:97
360_01_STG
=359/196.9/ M24
M24 /198.3
PE
=F5-X1 91 92 93 PE
-W1
YSLY-JZ 04X1,5 GR
4x1,5
300/500 V
1 2 3 GNYE
U1 V1 W1 PE
M
3 ~
-M1
400V/50Hz/0,37kW/1,1A
Crumbler infeed roll

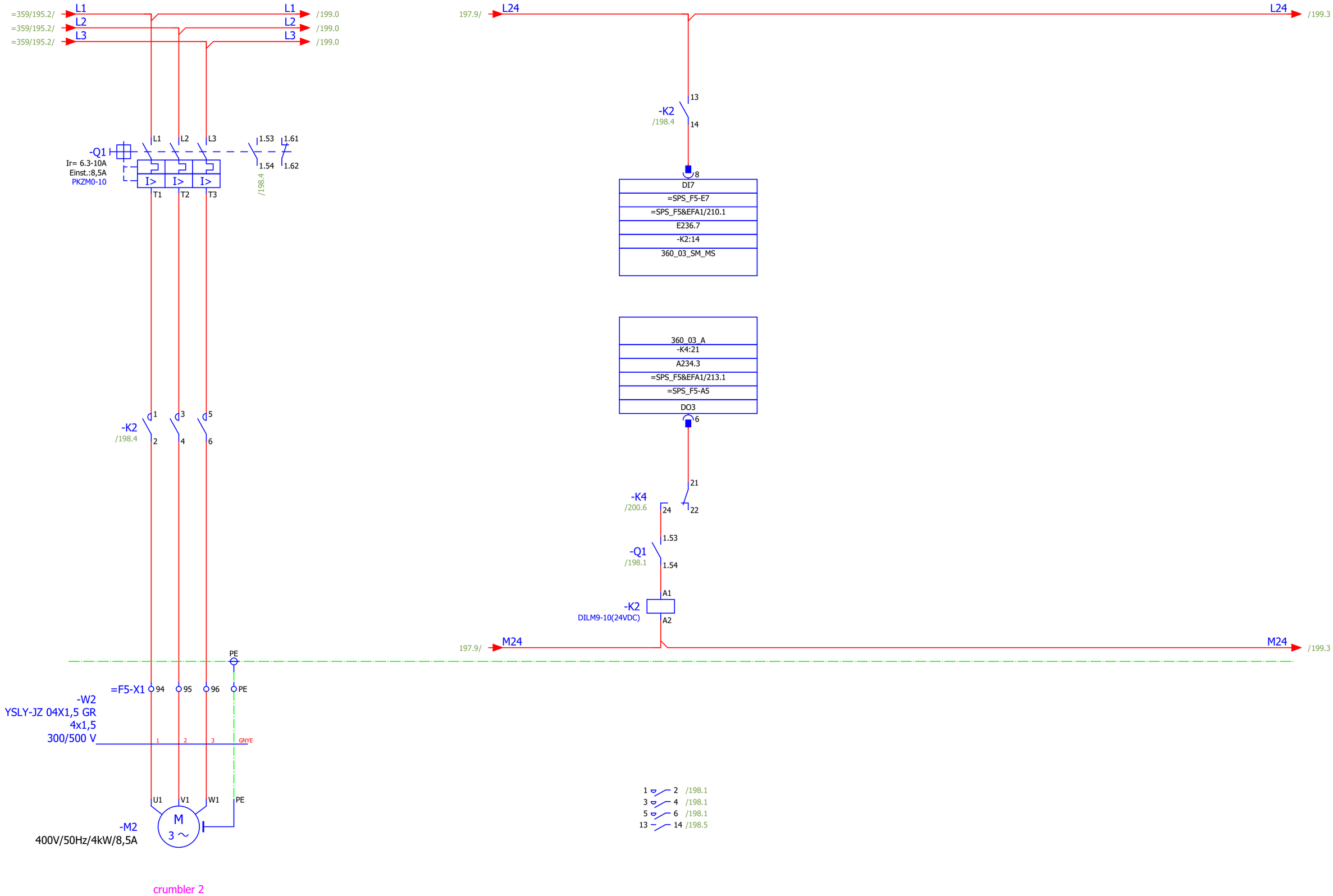

197

199

			Date	12.12.2019	Mixed feed plant Golden Poultry	BEYTEC ... your gateway to success	activation crumbler 2 motor 1	= 360
			Ed.	willen				+ F25
			Appr		Field 5		1 : 1	Part II
Modification	Date	Name	Original	V:\EPLAN\Projekte\Company\Replaced\Beytec\2018\Feed Mill Alssad.elk	Replaced by			Page 198 / Page 605

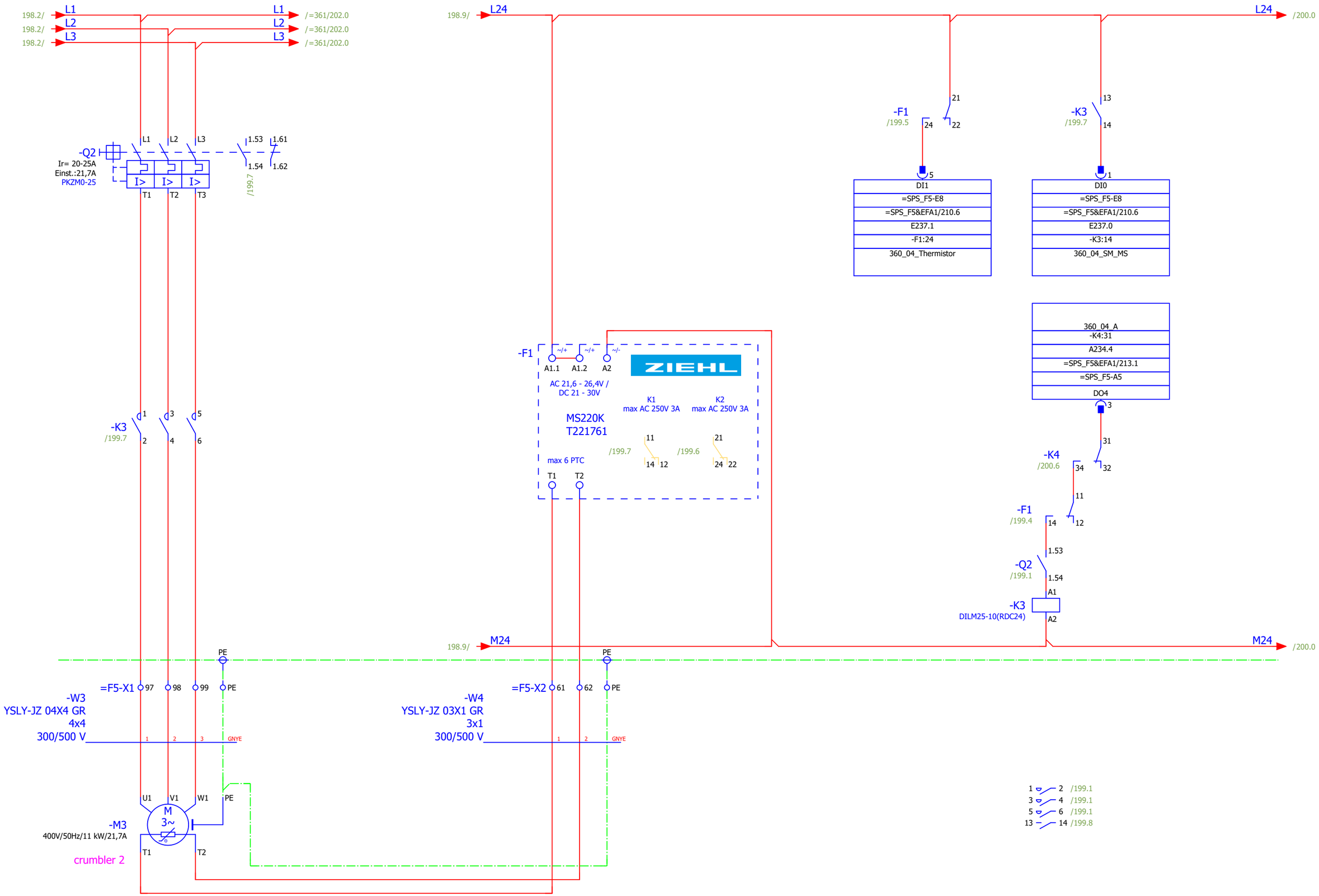

198 200

			Date	12.12.2019	Mixed feed plant Golden Poultry	BEYTEC ... your gateway to success	activation crumbler 2 motor 2	= 360	
			Ed.	willen				+ F25	
			Appr		Field 5			1 : 1 Part II	Page 199
Modification	Date	Name	Original	V:\EPLAN\Projekte\Company\Replace\Beytec\2018\Feed Mill Alssad.elk	Replaced by				Page 605

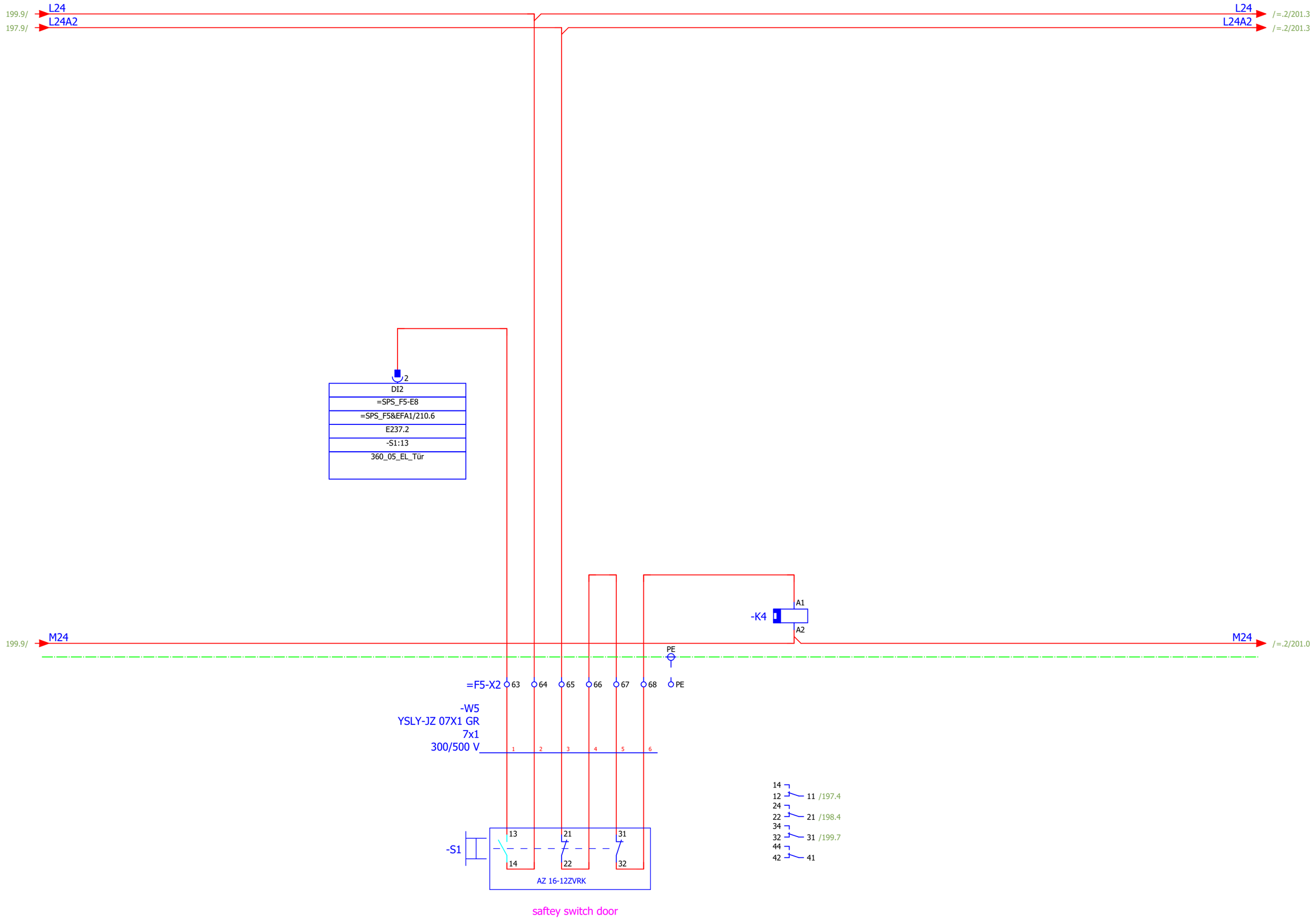

			Date	12.12.2019	Mixed feed plant Golden Poultry	BEYTEC ... your gateway to success	door switch crumbler 2		= 360	
			Ed.	willen	Field 5				+ F25	
			Appr					1 : 1	Part II	Page 200
Modification	Date	Name	Original	V:\EPLAN\Projekte\Company\Beytec\2018\Feed Mill Alssad.elk	Replace Beytec	Replaced by				Page 605

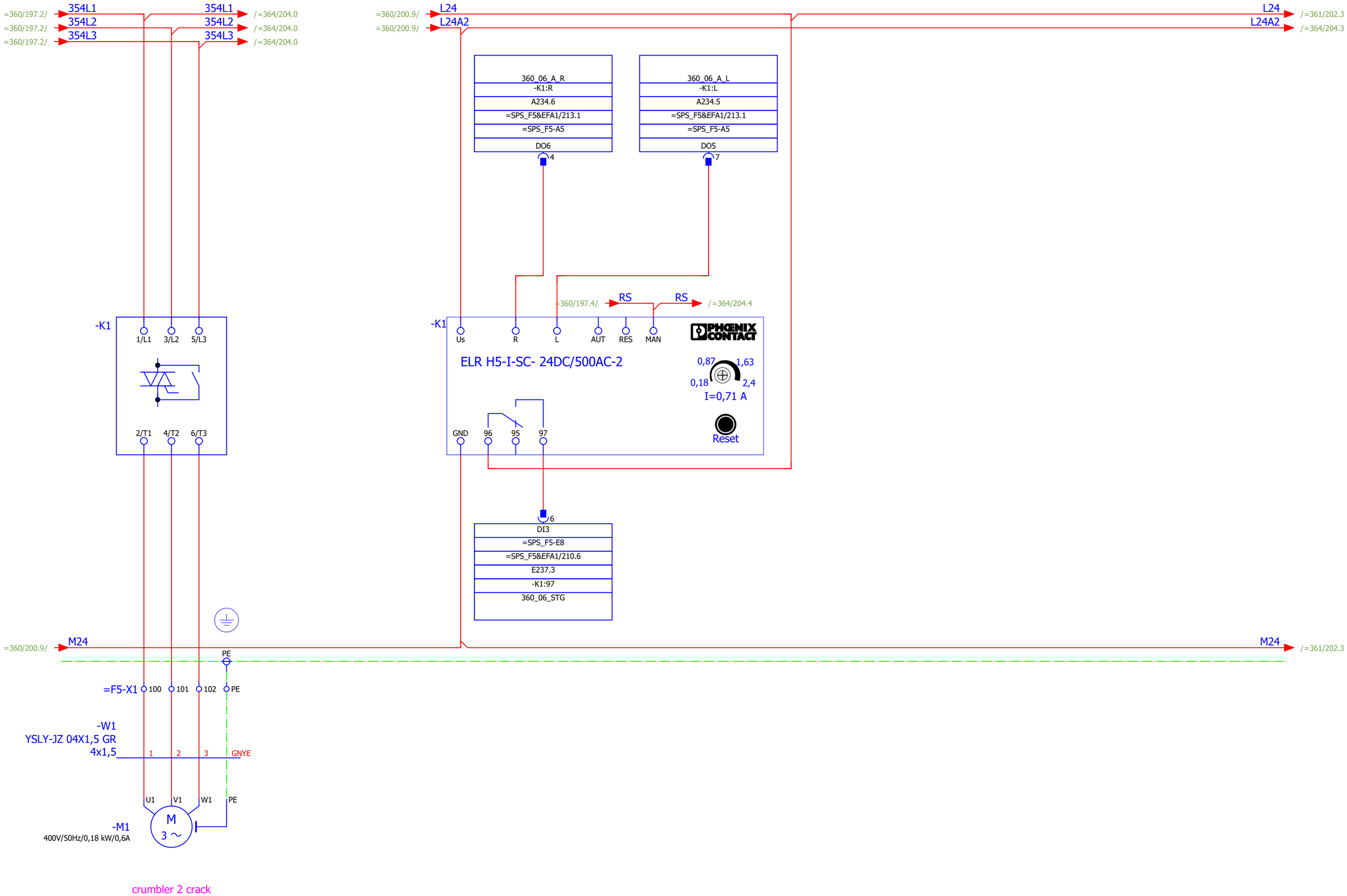

crumbler 2 crack

=360+F27/411

+F27/412

			Date	12.12.2019	Mixed feed plant Golden Poultry	BEYTEC ... your gateway to success	roller adjustment crumbler 2	= 360.2	
			Ed.	willen				+ F25	
			Appr		Field 5		1 : 1	Part II	Page 201
Modification	Date	Name	Original	V:\EPLAN\Projekte\Company\Replace\Beytec\2018\Feed Mill Alssad.elk	Replaced by				Page 605

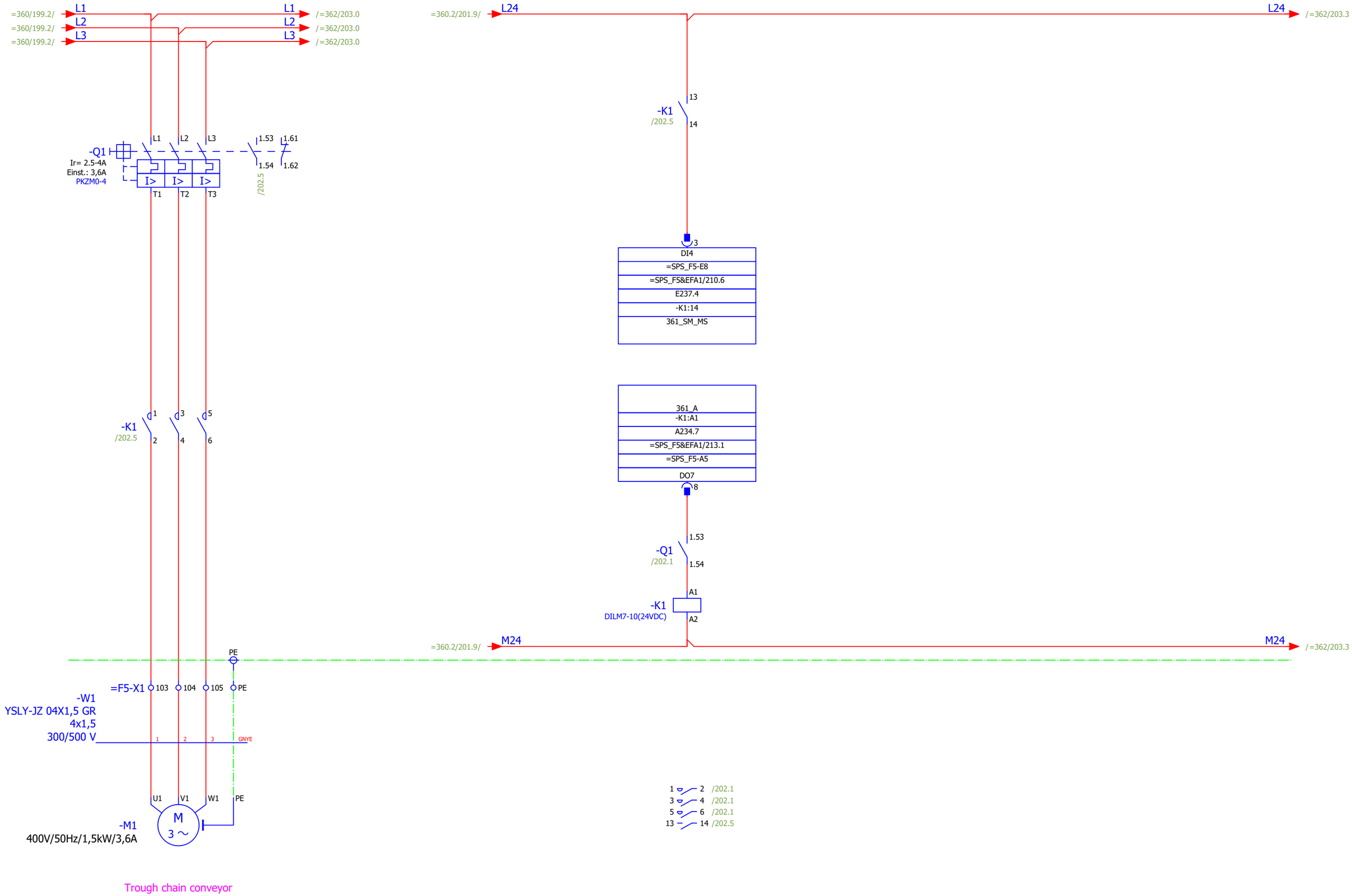

Trough chain conveyor

=360.2+F27/412

+F27/413

			Date	12.12.2019	Mixed feed plant Golden Poultry	BEYTEC ... your gateway to success	load circuit trough chain conveyor	= 361	
			Ed.	willen				+ F25	
			Appr		Field 5			1 : 1 / Part II	Page 202
Modification	Date	Name	Original	V:\EPLAN\Projekte\Company\Beytec\2018\Feed Mill Alssad.elk	Replaced by				Page 605

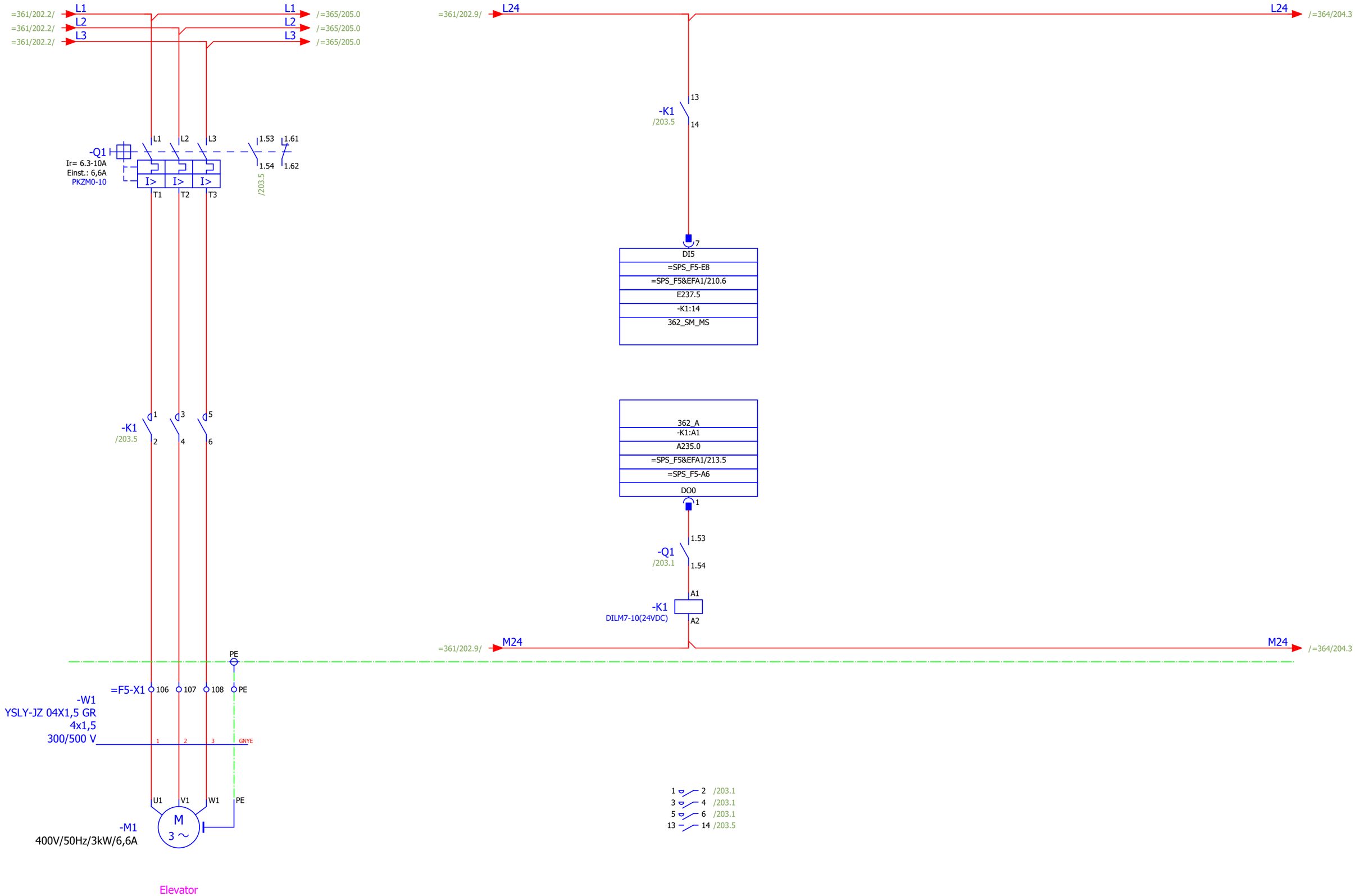

Elevator

=361+F27/413

+F27/414

			Date	12.12.2019	Mixed feed plant Golden Poultry	BEYTEC ... your gateway to success	load circuit elevator	= 362
			Ed.	willen				+ F25
			Appr		Field 5		1 : 1	Part II
Modification	Date	Name	Original	V:\EPLAN\Projekte\Company\Beytec\2018\Feed Mill Alssad.elk	Replaced by			Page 203 / Page 605

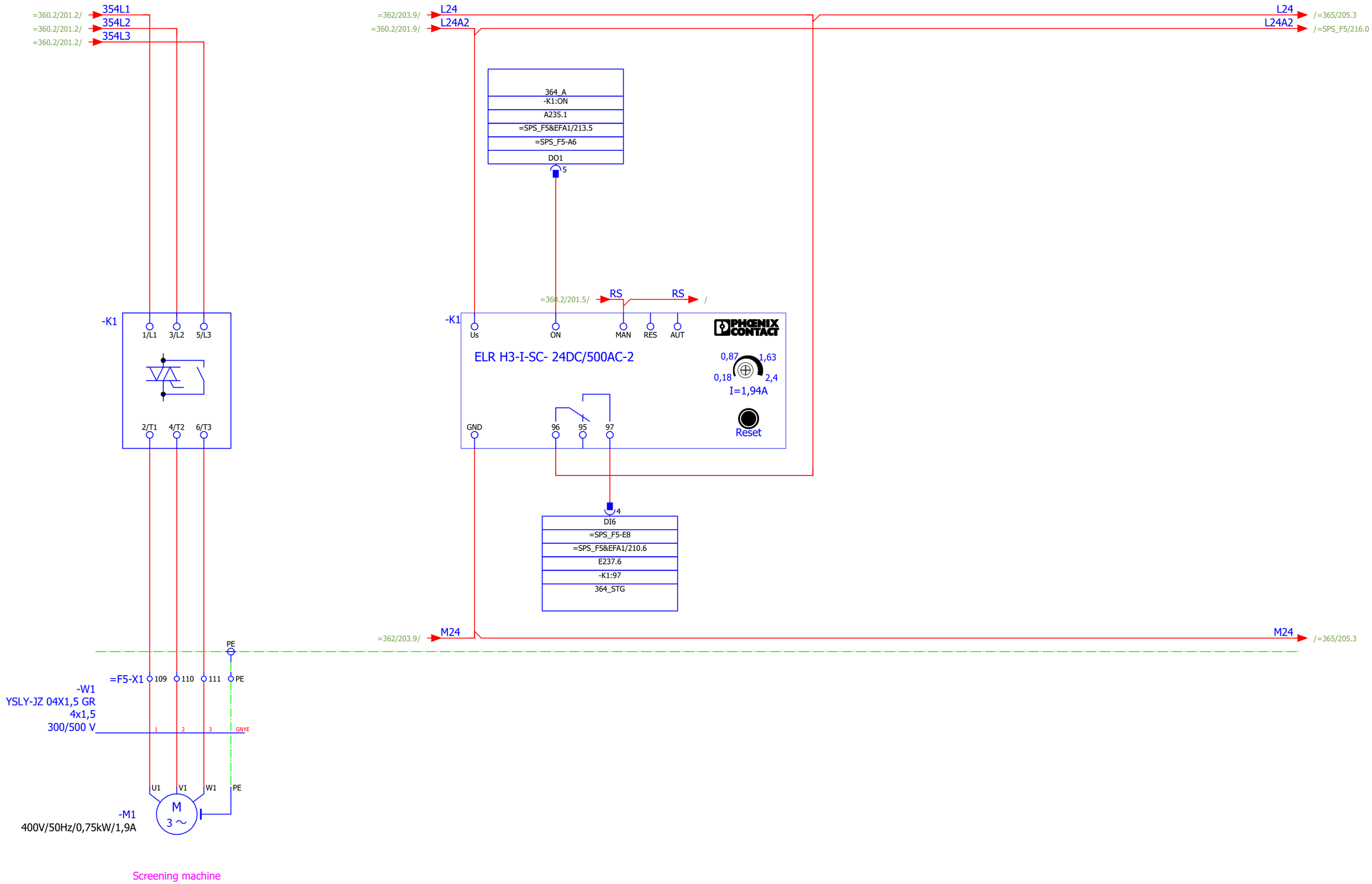

=363+F27/416

+F27/417

			Date	12.12.2019	Mixed feed plant Golden Poultry	BEYTEC ... your gateway to success	activation screening machine	= 364	
			Ed.	willen	Field 5			+ F25	
			Appr				1 : 1	Part II	Page 204
Modification	Date	Name	Original	V:\EPLAN\Projekte\Company\Beytec\2018\Feed Mill Alssad.elk	Replaced by				Page 605

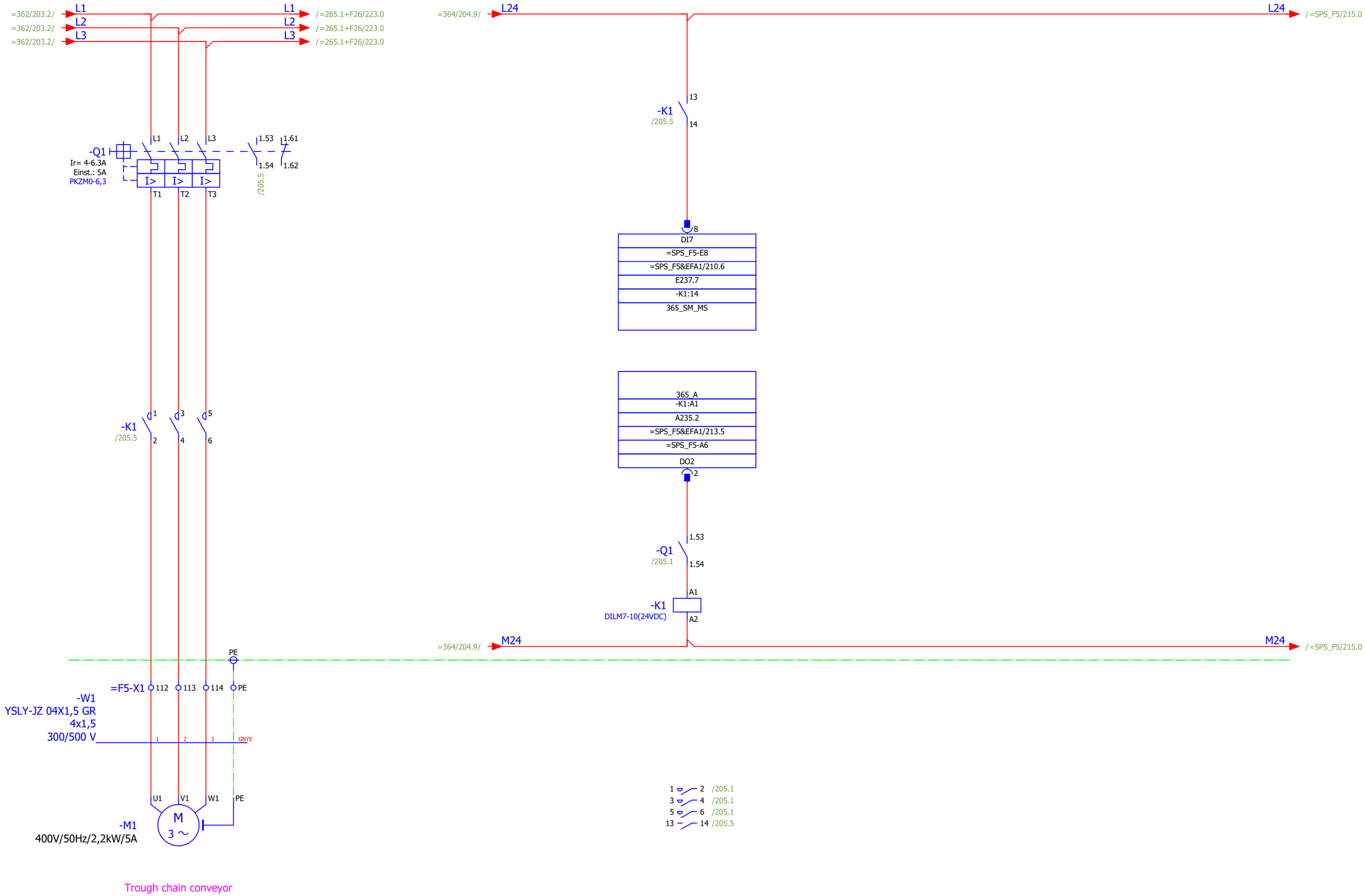

Trough chain conveyor

=364+F27/417

+F27/418

			Date	12.12.2019	Mixed feed plant Golden Poultry	BEYTEC ... your gateway to success	load circuit trough chain conveyor		= 365		
			Ed.	willen	Field 5				+ F25		
			Appr					1 : 1	Part II	Page	205
Modification	Date	Name	Original	V:\EPLAN\Projekte\Company\Beytec\2018\Feed Mill Alssad.elk	Replaced by					Page	605

-K1
&ETC/217.0

ET200S SIEMENS
IM 151-1 STANDARD

-X1: DP — &EFS/215.6

-X20:1 1L+ — &EFS/215.3
-X20:2 2L+ — &EFS/215.4
-X20:3 1M — &EFS/215.5
-X20:4 2M — &EFS/215.6

6ES7151-1AA06-0AB0

-K2
&ETC/217.2

ET200S SIEMENS
PM-E DC 24V

2 DC24V — &EFS/216.1
3 M — &EFS/216.1
A4 AUX1 — &EFS/216.4

6 DC24V — &EFS/216.2
7 M — &EFS/216.2
A8 AUX1 — &EFS/216.4

6ES7138-4CA01-0AA0
+ TM-P15C23-A0

-K3
&ETC/217.5

ET200S SIEMENS
PM-E DC 24V

2 DC24V — &EFS/216.5
3 M — &EFS/216.6
A4 AUX1 — &EFS/216.8

6 DC24V — &EFS/216.6
7 M — &EFS/216.7
A8 AUX1 — &EFS/216.8

6ES7138-4CA01-0AA0
+ TM-P15C23-A0

-E1
&ETC/217.2

ET200S SIEMENS
8 DI DC 24 S

E230.0	1 DI0	=251&EFS/156=4251-G1:RUN	251_FU_BM
E230.2	2 DI2	=251&EFS/157=5251-F2:24	251_Thermistor
E230.4	3 DI4	=252&EFS/158=5252-F1:24	252_Thermistor
E230.6	4 DI6	=254.3&EFS/159=6254.3-K1:97	254_03_STG
E230.1	5 DI1	=251&EFS/156=4251-G1:A	251_FU_STG
E230.3	6 DI3	=252&EFS/158=8252-K1:14	252_SM_MS
E230.5	7 DI5	=254.3&EFS/159=9254.3-Q1:1.54	Allg_VS_254
E230.7	8 DI7	=254.3&EFS/160=6254.3-K2:97	254_04_01_STG

6ES7131-4BF00-0AA0
+ TM-E15C24-01

-E2
&ETC/217.2

ET200S SIEMENS
8 DI DC 24 V

E231.0	1 DI0	=255&EFS/161=4255-K1:97	255_01_01_STG
E231.2	2 DI2	=255&EFS/163=4255-K3:97	255_01_08_STG
E231.4	3 DI4	=255&EFS/165=5255-K5:14	255_01_06_Thermostat
E231.6	4 DI6	=255&EFS/166=6255-BG2:BK	255_01_09_EL_GS
E231.1	5 DI1	=255&EFS/162=4255-K2:97	255_01_02_STG
E231.3	6 DI3	=255&EFS/164=3255-S1:14	255_01_07_EL_Tür
E231.5	7 DI5	=255&EFS/166=4255-BG1:BK	255_01_09_EL_AS
E231.7	8 DI7	=256&EFS/167=4256-BG1:BK	256_EL_AS

6ES7131-4BF00-0AA0
+ TM-E15C24-01

-E3
&ETC/217.3

ET200S SIEMENS
8 DI DC 24 V

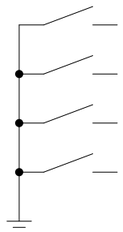

E232.0	1 DI0	=256&EFS/167=6256-BG2:BK	256_EL_GS
E232.2	2 DI2	=258.1&EFS/169=6258.1-K1:97	258_01_STG
E232.4	3 DI4	=259&EFS/171=5259-Q1:1.62	259_SM_D
E232.6	4 DI6	=260&EFS/172=4260-K1:97	260_01_STG

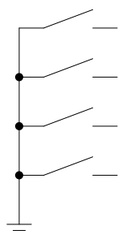

E232.1	5 DI1	=258&EFS/168=4258-K1:97	258_STG
E232.3	6 DI3	=259&EFS/171=4259-K2:14	259_MS
E232.5	7 DI5	=259&EFS/171=6259-F1:24	259_Thermistor
E232.7	8 DI7	=260&EFS/173=5260-K2:14	260_03_SM_MS

6ES7131-4BF00-0AA0
+ TM-E15C24-01

-E4
&ETC/217.3

ET200S SIEMENS
8 DI DC 24 V

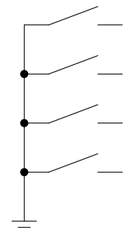

E233.0	1 DI0	=260&EFS/174=8260-K3:14	260_04_SM_MS
E233.2	2 DI2	=260&EFS/175=3260-S1:13	260_05_EL_Tür
E233.4	3 DI4	=261&EFS/177=5261-K1:14	261_SM_MS
E233.6	4 DI6	=264&EFS/179=4264-K1:97	264_STG

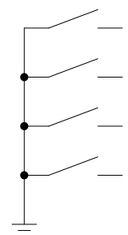

E233.1	5 DI1	=260&EFS/174=6260-F1:24	260_04_Thermistor
E233.3	6 DI3	=260.2&EFS/176=260.2-K1:97	260_06_STG
E233.5	7 DI5	=262&EFS/178=5262-K1:14	262_SM_MS
E233.7	8 DI7	=265&EFS/180=5265-K1:14	265_SM_MS

6ES7131-4BF00-0AA0
+ TM-E15C24-01

-E5
&ETC/217.3

ET200S SIEMENS
8 DI DC 24 V

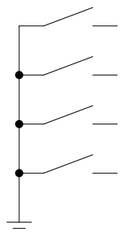

E234.0	1 DI0	=351&EFS/181=4351-G1:RUN	351_FU_BM
E234.2	2 DI2	=351&EFS/182=5351-F2:24	351_Thermistor
E234.4	3 DI4	=352&EFS/183=5352-F1:24	352_Thermistor
E234.6	4 DI6	=354.3&EFS/184=354.3-K1:97	354_03_STG

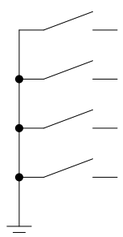

E234.1	5 DI1	=351&EFS/181=4351-G1:A	351_FU_STG
E234.3	6 DI3	=352&EFS/183=8352-K1:14	352_SM_MS
E234.5	7 DI5	=354.3&EFS/184=354.3-Q1:1.54	Allg_VS_354
E234.7	8 DI7	=354.3&EFS/185=354.3-K2:97	354_04_01_STG

6ES7131-4BF00-0AA0
+ TM-E15C24-01

-E6
&ETC/217.4

ET200S SIEMENS
8 DI DC 24 V

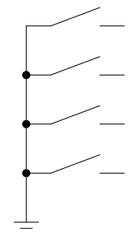

E235.0	1 DI0	=355&EFS/186=4355-K1:97	355_01_01_STG
E235.2	2 DI2	=355&EFS/188=4355-K3:97	355_01_08_STG
E235.4	3 DI4	=355&EFS/190=5355-K5:14	355_01_06_Thermostat
E235.6	4 DI6	=355&EFS/191=6355-BG2:BK	355_01_09_EL_GS

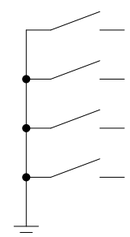

E235.1	5 DI1	=355&EFS/187=4355-K2:97	355_01_02_STG
E235.3	6 DI3	=355&EFS/189=3355-S1:14	355_01_07_EL_Tür
E235.5	7 DI5	=355&EFS/191=4355-BG1:BK	355_01_09_EL_AS
E235.7	8 DI7	=356&EFS/192=4356-BG1:BK	356_EL_AS

6ES7131-4BF00-0AA0
+ TM-E15C24-01

-E7
&ETC/217.4

ET200S SIEMENS
8 DI DC 24 V

E236.0	1 DI0	=356&EFS/192=6356-BG2:BK	356_EL_GS
E236.2	2 DI2	=358.1&EFS/194=4358.1-K1:97	358_01_STG
E236.4	3 DI4	=359&EFS/196=4359-K2:14	359_SM_D
E236.6	4 DI6	=360&EFS/197=4360-K1:97	360_01_STG
E236.1	5 DI1	=358&EFS/193=4358-K1:97	358_STG
E236.3	6 DI3	=359&EFS/196=5359-Q1:1.62	359_MS
E236.5	7 DI5	=359&EFS/196=6359-F1:24	359_Thermistor
E236.7	8 DI7	=360&EFS/198=5360-K2:14	360_03_SM_MS

6ES7131-4BF00-0AA0
+ TM-E15C24-01

-E8
&ETC/217.4

ET200S SIEMENS
8 DI DC 24 V

E237.0	1 DI0	=360&EFS/199=8360-K3:14	360_04_SM_MS
E237.2	2 DI2	=360&EFS/200=3360-S1:13	360_05_EL_Tür
E237.4	3 DI4	=361&EFS/202=5361-K1:14	361_SM_MS
E237.6	4 DI6	=364&EFS/204=4364-K1:97	364_STG
E237.1	5 DI1	=360&EFS/199=6360-F1:24	360_04_Thermistor
E237.3	6 DI3	=360.2&EFS/204=360.2-K1:97	360_06_STG
E237.5	7 DI5	=362&EFS/203=5362-K1:14	362_SM_MS
E237.7	8 DI7	=365&EFS/205=5365-K1:14	365_SM_MS

6ES7131-4BF00-0AA0
+ TM-E15C24-01

-A1
&ETC/217.5

ET200S SIEMENS
8 DO DC24V 0,5A

A230.0 1/QX.0/DO0	1 DO0	=251&EFS/156=4251-K1:A1	251_A_FU_Start
A230.2 2/QX.2/DO2	2 DO2	=254.3&EFS/159=F254.3-K1:MAN	Allg_Reset_F25
A230.4 3/QX.4/DO4	3 DO4	=254.3&EFS/160=4254.3-K2:ON	254_04_01_A
A230.6 4/QX.6/DO6	4 DO6	=255&EFS/162=4255-K4:21	255_01_02_A
A230.1 5/QX.1/DO1	5 DO1	=252&EFS/158=4252-F1:11	252_A
A230.3 6/QX.3/DO3	6 DO3	=254.3&EFS/159=F254.3-K1:ON	254_03_A
A230.5 7/QX.5/DO5	7 DO5	=255&EFS/161=4255-K4:11	255_01_01_A
A230.7 8/QX.7/DO7	8 DO7	=255&EFS/163=4255-K4:31	255_01_08_A

6ES7132-4BF00-0AA0
+ TM-E15C24-01

-A2
&ETC/217.6

ET200S SIEMENS
8 DO DC24V 0,5A

A231.0 1/QX.0/DO0	1 DO0	=255&EFS/166=3255-K4:41	255_01_09_A_AS
A231.2 2/QX.2/DO2	2 DO2	=258&EFS/168=4258-K1:ON	258_A
A231.4 3/QX.4/DO4	3 DO4	=259&EFS/171=6259-K5:A1	259_A
A231.6 4/QX.6/DO6	4 DO6	=260&EFS/173=5260-K4:21	260_03_A
A231.1 5/QX.1/DO1	5 DO1	=256&EFS/167=3255-K5:21	256_A_AS
A231.3 6/QX.3/DO3	6 DO3	=258.1&EFS/169=F258.1-K1:ON	258_01_A
A231.5 7/QX.5/DO5	7 DO5	=260&EFS/172=4260-K4:11	260_01_A
A231.7 8/QX.7/DO7	8 DO7	=260&EFS/174=8260-K4:31	260_04_A

6ES7132-4BF00-0AA0
+ TM-E15C24-01

-A3
&ETC/217.6

ET200S SIEMENS
8 DO DC24V 0,5A

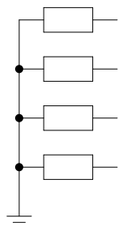

A232.0 1/QX.0/DO0	1 DO0	=260.2&EFS/176=260.2-K1:L	260_06_A_L
A232.2 2/QX.2/DO2	2 DO2	=261&EFS/177=261-K1:A1	261_A
A232.4 3/QX.4/DO4	3 DO4	=264&EFS/179=264-K1:ON	264_A
A232.6 4/QX.6/DO6	4 DO6	=351&EFS/181=351-K1:A1	351_A_FU_Start

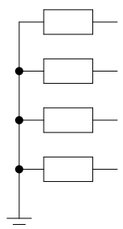

A232.1 5/QX.1/DO1	5 DO1	=260.2&EFS/176=260.2-K1:R	260_06_A_R
A232.3 6/QX.3/DO3	6 DO3	=262&EFS/178=262-K1:A1	262_A
A232.5 7/QX.5/DO5	7 DO5	=265&EFS/180=265-K1:A1	265_A
A232.7 8/QX.7/DO7	8 DO7	=352&EFS/183=352-F1:11	352_A

6ES7132-4BF00-0AA0
+ TM-E15C24-01

-A4
&ETC/217.6

ET200S SIEMENS
8 DO DC24V 0,5A

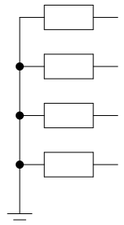

A233.0 1/QX.0/DO0	1 DO0	=354.3&EFS/184=354.3-K1:ON	354_03_A
A233.2 2/QX.2/DO2	2 DO2	=355&EFS/186=355-K4:11	355_01_01_A
A233.4 3/QX.4/DO4	3 DO4	=355&EFS/188=355-K4:31	355_01_08_A
A233.6 4/QX.6/DO6	4 DO6	=356&EFS/192=355-K5:21	356_A_AS

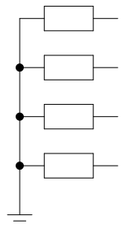

A233.1 5/QX.1/DO1	5 DO1	=354.3&EFS/185=354.3-K2:ON	354_04_01_A
A233.3 6/QX.3/DO3	6 DO3	=355&EFS/187=355-K4:21	355_01_02_A
A233.5 7/QX.5/DO5	7 DO5	=355&EFS/191=355-K4:41	355_01_09_A_AS
A233.7 8/QX.7/DO7	8 DO7	=358&EFS/193=358-K1:ON	358_A

6ES7132-4BF00-0AA0
+ TM-E15C24-01

-A5
&ETC/217.7

ET200S SIEMENS
8 DO DC24V 0,5A

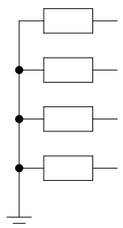

A234.0 1/QX.0/DO0	1 DO0	=358.1&EFS/194=358.1-K1:ON	358_01_A
A234.2 2/QX.2/DO2	2 DO2	=360&EFS/197=360-K4:11	360_01_A
A234.4 3/QX.4/DO4	3 DO4	=360&EFS/199=360-K4:31	360_04_A
A234.6 4/QX.6/DO6	4 DO6	=360.2&EFS/201=360.2-K1:R	360_06_A_R

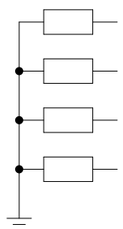

A234.1 5/QX.1/DO1	5 DO1	=359&EFS/196=359-K5:A1	359_A
A234.3 6/QX.3/DO3	6 DO3	=360&EFS/198=360-K4:21	360_03_A
A234.5 7/QX.5/DO5	7 DO5	=360.2&EFS/201=360.2-K1:L	360_06_A_L
A234.7 8/QX.7/DO7	8 DO7	=361&EFS/202=361-K1:A1	361_A

6ES7132-4BF00-0AA0
+ TM-E15C24-01

-A6
&ETC/217.7

ET200S SIEMENS
8 DO DC24V 0,5A

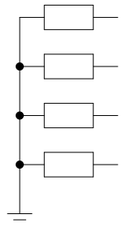

A235.0 1/QX.0/DO0	1 DO0	=362&EFS/203=362-K1:A1	362_A
A235.2 2/QX.2/DO2	2 DO2	=365&EFS/205=365-K1:A1	365_A
A235.4 3/QX.4/DO4	3 DO4		Spare
A235.6 4/QX.6/DO6	4 DO6		Spare

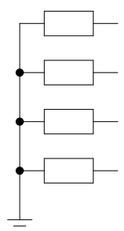

A235.1 5/QX.1/DO1	5 DO1	=364&EFS/204=364-K1:ON	364_A
A235.3 6/QX.3/DO3	6 DO3		Spare
A235.5 7/QX.5/DO5	7 DO5		Spare
A235.7 8/QX.7/DO7	8 DO7		Spare

6ES7132-4BF00-0AA0
+ TM-E15C24-01

-PAW1
&ETC/217.7

ET200S SIEMENS
2 AO U STANDARD

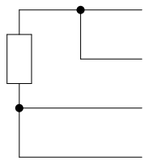

PAW362	1 QV	=251&EFS/156.7251-G1:2	251_AA
	2 S+	=251&EFS/156.7	
	3 Mana	=251&EFS/156.7	
	4 S-	=251&EFS/156.7	

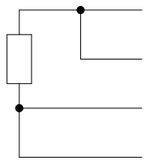

PAW364	5 QV	=351&EFS/181.7351-G1:2	351_AA
	6 S+	=351&EFS/181.7	
	7 Mana	=351&EFS/181.7	
	8 S-	=351&EFS/181.7	

6ES7135-4FB00-0AB0
+ TM-E15C24-01

			Date	12.12.2019	Mixed feed plant Golden Poultry	BEYTEC ... your gateway to success	overview analog outputs	= SPS_F5
			Ed.	willen				+ F25
			Appr		Field 5		1 : 1	Part II
Modification	Date	Name	Original	V:\EPLAN\Projekte\Company\Beytec\2018\Feed Mill Alssad.elk	Replaced by			Page 214 / Page 605

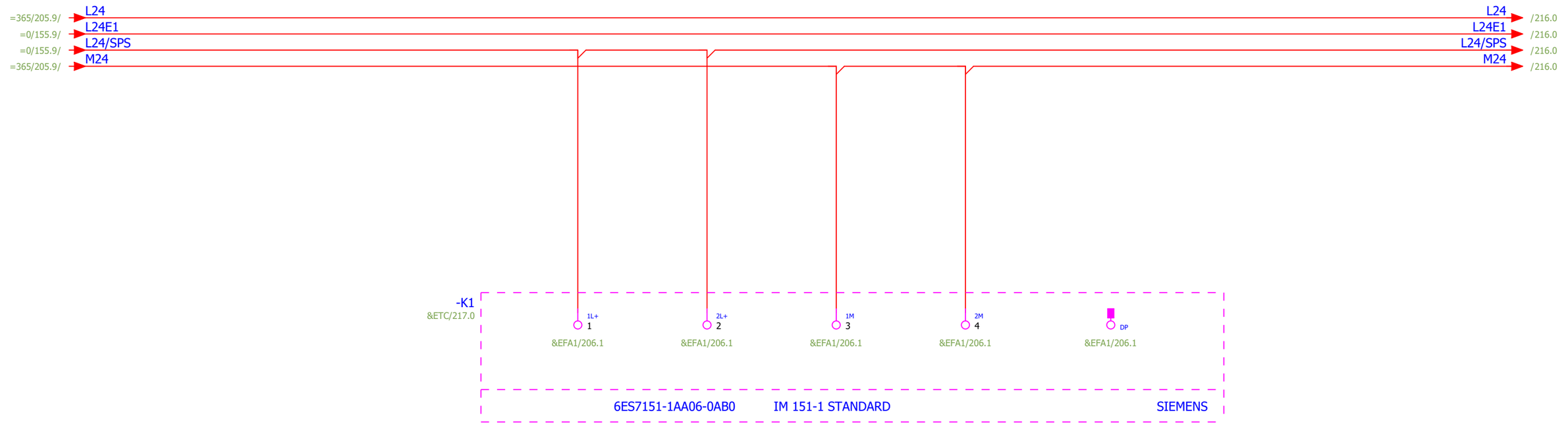
=365/205.9/
L24
=0/155.9/
L24E1
=0/155.9/
L24/SPS
=365/205.9/
M24
L24
/216.0
L24E1
/216.0
L24/SPS
/216.0
M24
/216.0
-K1
&ETC/217.0
1L+
1
&EFA1/206.1
2L+
2
&EFA1/206.1
1M
3
&EFA1/206.1
2M
4
&EFA1/206.1
DP
&EFA1/206.1
6ES7151-1AA06-0AB0
IM 151-1 STANDARD
SIEMENS

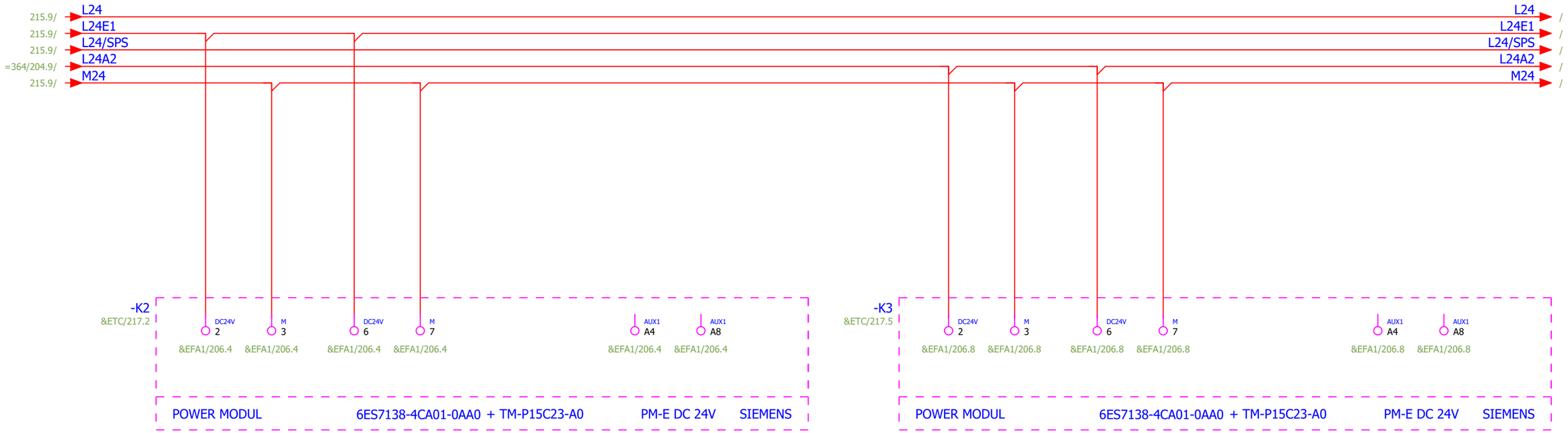

			Date	12.12.2019	Mixed feed plant Golden Poultry	BEYTEC ... your gateway to success	PLC power supply power module		= SPS_F5
			Ed.	willen					+ F25
			Appr		Field 5			1 : 1	Part II
Modification	Date	Name	Original	V:\EPLAN\Projekte\Company\Beytec\2018\Feed Mill Alssad.elk	Replaced by				Page 216
									Page 605

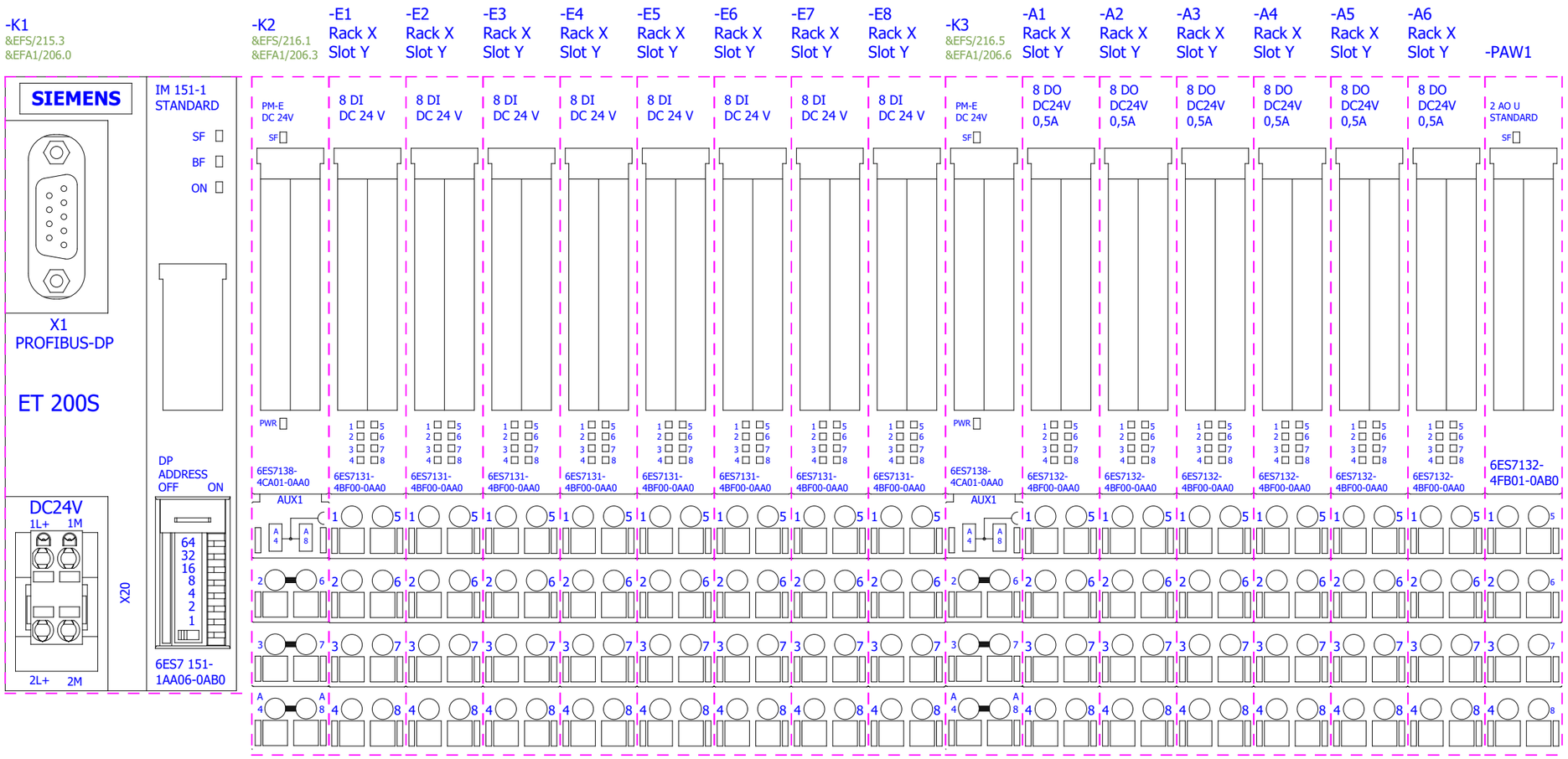

&EFS/216

=HM++A3+HM2&EFS/498

			Date	12.12.2019	Mixed feed plant Golden Poultry	BEYTEC	PLC overview field 5		= SPS_F5	
			Ed.	willen					+ F25	
			Appr		Field 5	... your gateway to success		1 : 1	Part II	Page 217
Modification	Date	Name	Original	V:\EPLAN\Projekte\Company\Beytec\2018\Feed Mill Alssad.elk	Replace Beytec	Replaced by				Page 605

BEYTEC

... your gateway to success

Company / customer	BeyTec
Project description	Golden Poultry
Job number	Part II
Mounting location	Field 6

Technical data:

Operating voltage	400 V
Operating frequency	50 Hz
Operating current	
Power network	
Control voltage	24VDC
Protection class electrical	SK I
Degree of protection	IP54
Responsible for project	Willen

Created on	21.10.2019		
Edit date	12.12.2019	by (short name) willen	Number of pages 605

Table of contents

Column X: An automatically generated page was edited

F06_001_EN

Page	Page description	supplementary page field	Date	Edited by	X
++A1+F26&BAA/218	Title page / cover sheet		12.12.2019	willen	X
++A1+F26&BAB/219	Table of contents : ++A1+F26&BAA/218 - =269++A1+F26&EFS/250		12.12.2019	willen	
++A1+F26&BAB/220	Table of contents : =269++A1+F26&EFS/251 - =SPS_F6++A1+F26&ETC/277		12.12.2019	willen	
++A1+F26&BPA/221	Summarized parts list : PXC.2702226 - SIE.6ES7135-4FB01-0AB0+TM-E15C24-01		12.12.2019	willen	X
=0++A1+F26&EFS/222	Control voltage field 6		12.12.2019	willen	
=265.1++A1+F26&EFS/223	mot. slide 265.1.1		12.12.2019	willen	
=265.1++A1+F26&EFS/224	mot. slide 265.1.2		12.12.2019	willen	
=265.1++A1+F26&EFS/225	mot. slide 265.1.3		12.12.2019	willen	
=365.1++A1+F26&EFS/226	mot. slide 365.1.1		12.12.2019	willen	
=365.1++A1+F26&EFS/227	mot. slide 365.1.2		12.12.2019	willen	
=365.1++A1+F26&EFS/228	mot. slide 365.1.3		12.12.2019	willen	
=266++A1+F26&EFS/229	load circuit trough chain conveyor		12.12.2019	willen	
=266.1++A1+F26&EFS/230	mot. slide 1		12.12.2019	willen	
=266.1++A1+F26&EFS/231	mot. slide 2		12.12.2019	willen	
=266.1++A1+F26&EFS/232	mot. slide 3		12.12.2019	willen	
=266.1++A1+F26&EFS/233	mot. slide 4		12.12.2019	willen	
=267++A1+F26&EFS/234	load circuit trough chain conveyor		12.12.2019	willen	
=267.1++A1+F26&EFS/235	mot. slide 267.1.1		12.12.2019	willen	
=267.1++A1+F26&EFS/236	mot. slide 267.1.2		12.12.2019	willen	
=267.1++A1+F26&EFS/237	mot. slide 267.1.3		12.12.2019	willen	
=267.1++A1+F26&EFS/238	mot. slide 267.1.4		12.12.2019	willen	
=269++A1+F26&EFS/239	mot. slide 269.1.1		12.12.2019	willen	
=269++A1+F26&EFS/240	mot. slide 269.1.2		12.12.2019	willen	
=269++A1+F26&EFS/241	mot. slide 269.2.1		12.12.2019	willen	
=269++A1+F26&EFS/242	mot. slide 269.2.2		12.12.2019	willen	
=269++A1+F26&EFS/243	mot. slide 269.3.1		12.12.2019	willen	
=269++A1+F26&EFS/244	mot. slide 269.3.2		12.12.2019	willen	
=269++A1+F26&EFS/245	mot. slide 269.4.1		12.12.2019	willen	
=269++A1+F26&EFS/246	mot. slide 269.4.2		12.12.2019	willen	
=269++A1+F26&EFS/247	mot. slide 269.5.1		12.12.2019	willen	
=269++A1+F26&EFS/248	mot. slide 269.5.2		12.12.2019	willen	
=269++A1+F26&EFS/249	mot. slide 269.6.1		12.12.2019	willen	
=269++A1+F26&EFS/250	mot. slide 269.6.2		12.12.2019	willen	

Table of contents

Column X: An automatically generated page was edited

F06_001_EN

Page	Page description	supplementary page field	Date	Edited by	X
=269++A1+F26&EFS/251	mot. slide 269.7.1		12.12.2019	willen	
=269++A1+F26&EFS/252	mot. slide 269.7.2		12.12.2019	willen	
=269++A1+F26&EFS/253	mot. slide 269.8.1		12.12.2019	willen	
=269++A1+F26&EFS/254	mot. slide 269.8.2		12.12.2019	willen	
=269++A1+F26&EFS/255	emergency stop truck loading		12.12.2019	willen	
=280++A1+F26&EFS/256	Ansteuerung Trogförderkette		12.12.2019	willen	
=280++A1+F26&EFS/257	activation trough chain conveyor		12.12.2019	willen	
=281++A1+F26&EFS/258	activation trough chain conveyor		12.12.2019	willen	
=282++A1+F26&EFS/259	activation trough chain conveyor		12.12.2019	willen	
=283++A1+F26&EFS/260	emergency stop bagging unit		12.12.2019	willen	
=SPS_F6++A1+F26&EFA1/261	overview bus coupler and power module		12.12.2019	willen	
=SPS_F6++A1+F26&EFA1/262	overview inputs		12.12.2019	willen	
=SPS_F6++A1+F26&EFA1/263	overview inputs		12.12.2019	willen	
=SPS_F6++A1+F26&EFA1/264	overview inputs		12.12.2019	willen	
=SPS_F6++A1+F26&EFA1/265	overview inputs		12.12.2019	willen	
=SPS_F6++A1+F26&EFA1/266	overview inputs		12.12.2019	willen	
=SPS_F6++A1+F26&EFA1/267	overview inputs		12.12.2019	willen	
=SPS_F6++A1+F26&EFA1/268	overview inputs		12.12.2019	willen	
=SPS_F6++A1+F26&EFA1/269	overview outputs		12.12.2019	willen	
=SPS_F6++A1+F26&EFA1/270	overview outputs		12.12.2019	willen	
=SPS_F6++A1+F26&EFA1/271	overview outputs		12.12.2019	willen	
=SPS_F6++A1+F26&EFA1/272	overview outputs		12.12.2019	willen	
=SPS_F6++A1+F26&EFA1/273	overview outputs		12.12.2019	willen	
=SPS_F6++A1+F26&EFA1/274	overview analog outputs		12.12.2019	willen	
=SPS_F6++A1+F26&EFS/275	PLC power supply bus coupler		12.12.2019	willen	
=SPS_F6++A1+F26&EFS/276	PLC power supply power module		12.12.2019	willen	
=SPS_F6++A1+F26&ETC/277	PLC overview field 6		12.12.2019	willen	

Summarized parts list

F02_002_en_US

Order number	Quantity	Designation	Type number	Supplier
2702226	1	LED enclosure light	PLD E 608 W 315/F	PXC
IG512A	60	Inductive sensor, DC PNP, Normally closed	IGK3005-APKG/AM/US104DPO/3G/3D	IFM
2900574	30	Hybrid motor starter	ELR H5-I-SC- 24DC/500AC-2	PXC
2903334	60	relay module 24DC/2X21	RIF-1-RPT-LDP-24DC/2X21	PHOENIX
046988	3	Motor-protective circuit-breaker, 3p, Ir=16-20A, screw connection	PKZM0-20	EATON
082882	8	Standard auxiliary contact, 1N/O+1N/C, flush mounting, screw connection	NHI-E-11-PKZ0	EATON
101451	6	Busbar adapter, 45mm, 25A, 1TS	BBA0-25	ETN
283149	8	Kit, +component adapter, for DOL starter for DILM7-M15	PKZM0-XDM12	ETN
276565	5	Contactor, 3p+1N/O, 3kW/400V/AC3	DILM7-10(24VDC)	ETN
072738	5	Motor-protective circuit-breaker, 3p, Ir=4-6.3A, screw connection	PKZM0-6,3	EATON
4970886	1	LS- Schalter C16 / 3-pol	DLS 6I C16-3	Doepke
101457	1	Busbar adapter, 55mm, 63A, 1TS	BBA4-63	ETN
T221761	2	MS220K, PTC-resistor trip device, AC/DC24V	MS220K	ZIEHL
234804	1	Inverter, degree of protection IP 20	FR-E740-060SC-EC	MITSUBISHI
2903370	1	????	RIF-0-RPT-24DC/21	PHOENIX
215005	1	EMC filter	FFR-MSH-170-30A-RF1	MIT
6ES7132-4BF00-0AA0 / 6ES7193-4CB30-0AA0	9	8DO, 24V DC, 0.5A / TM-E15C24-01	6ES7132-4BF00-0AA0 / 6ES7193-4CB30-0AA0	SIE
6ES7131-4BF00-0AA0 / 6ES7193-4CB30-0AA0	13	8DI, 24V DC / TM-E15C24-01	6ES7131-4BF00-0AA0 / 6ES7193-4CB30-0AA0	SIE
6ES7151-1AA06-0AB0	1	ET200S, IM151-1 STD, 12MBIT/S	6ES7151-1AA06-0AB0	SIE
6ES7138-4CA01-0AA0 / 6ES7193-4CD30-0AA0	2	PM-E, DC 24V / TM-P15C23-A0	6ES7138-4CA01-0AA0 / 6ES7193-4CD30-0AA0	SIE
6ES7135-4FB01-0AB0 / 6ES7193-4CB30-0AA0	1	2AO U, +/-10V, 1-5V, 13BIT / TM-E15C24-01	6ES7135-4FB01-0AB0 / 6ES7193-4CB30-0AA0	SIE

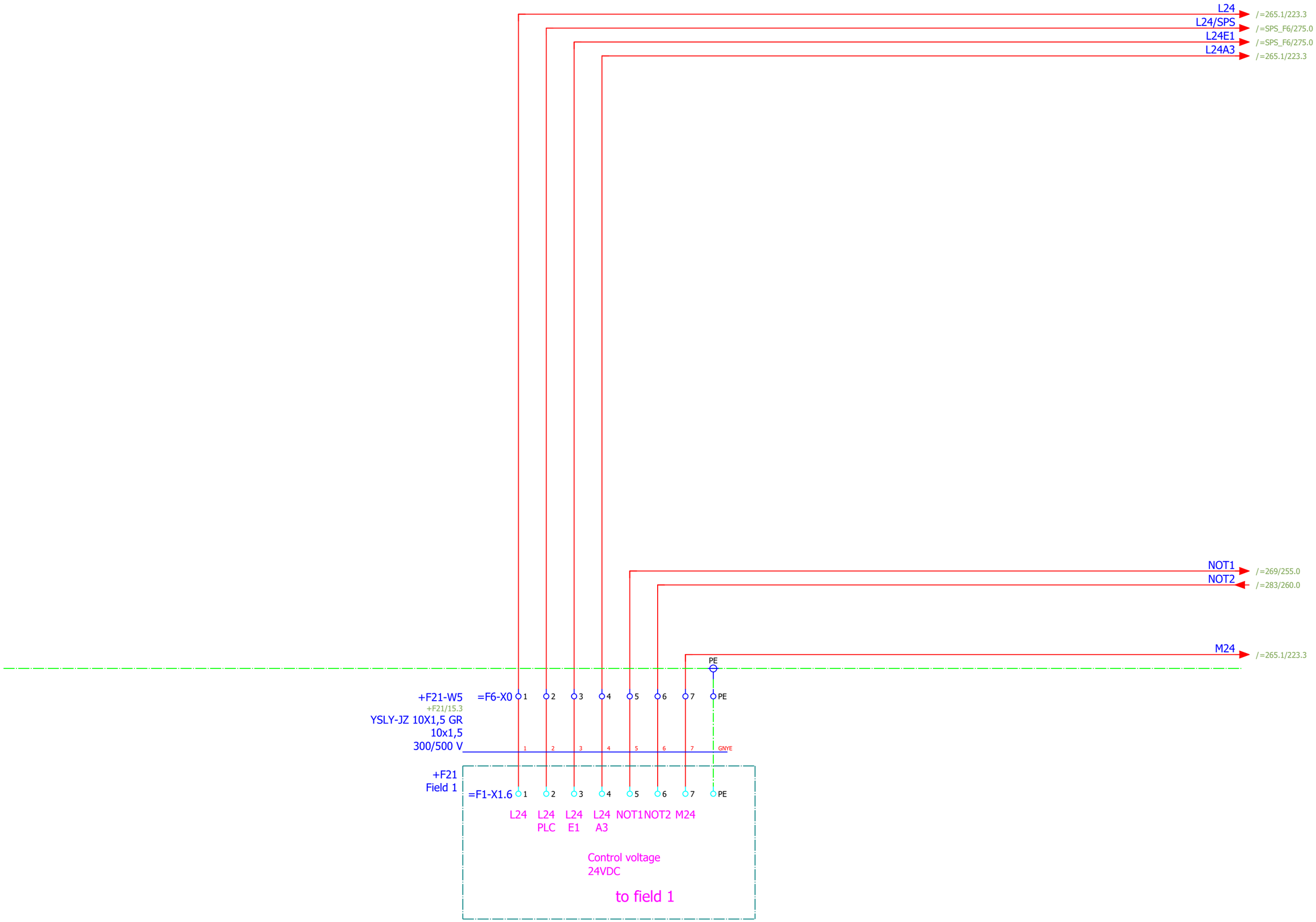

			Date	12.12.2019	Mixed feed plant Golden Poultry	BEYTEC ... your gateway to success	Control voltage field 6	= 0	
			Ed.	willen				+ F26	
			Appr		Field 6			1 : 1 Part II	Page 222
Modification	Date	Name	Original	V:\EPLAN\Projekte\Company\Replace\Beytec\2018\Feed Mill Alssad.elk	Replaced by				Page 605

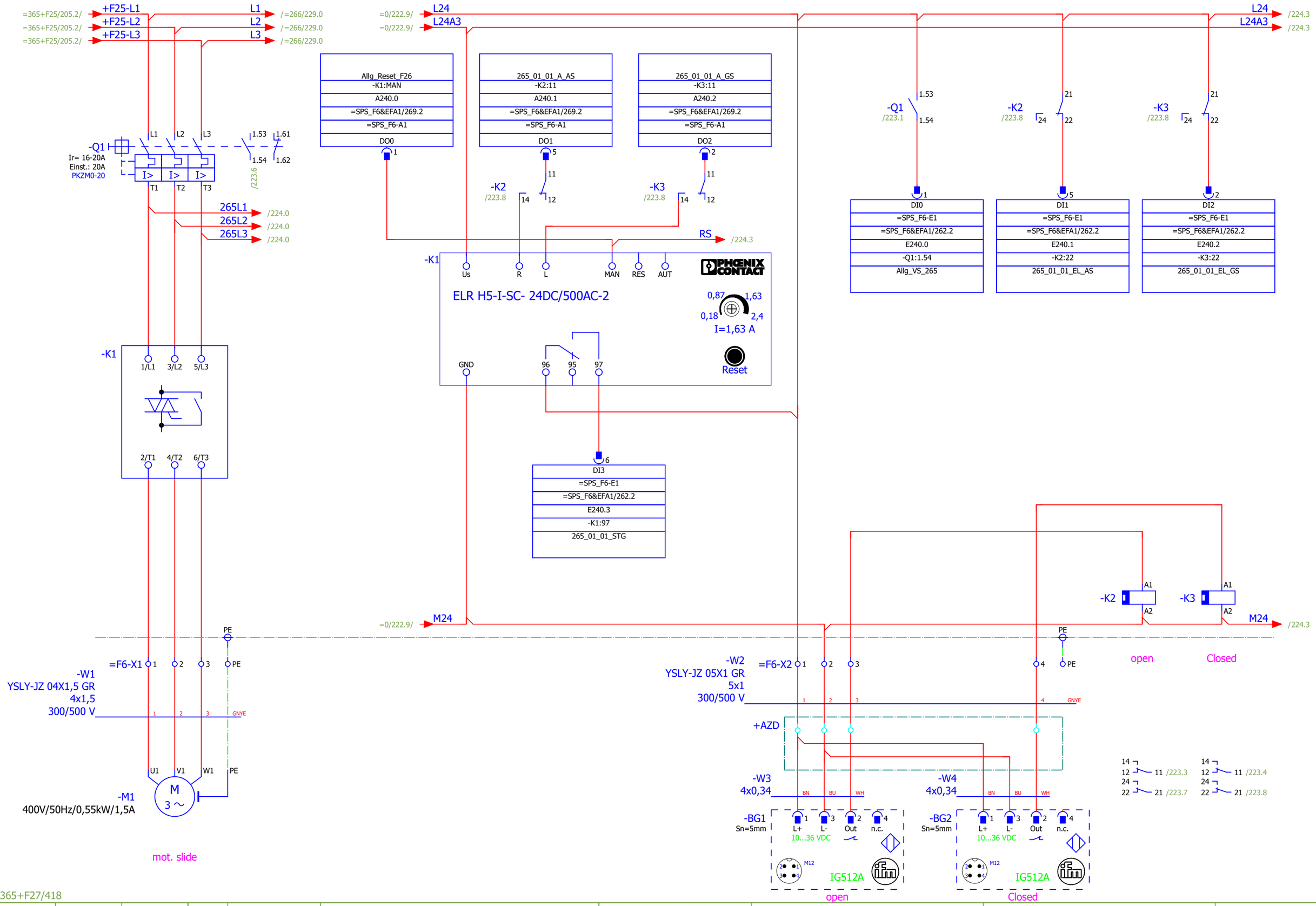
=365+F25/205.2/
+F25-L1
+F25-L2
+F25-L3
L1
L2
L3
/=266/229.0
=0/222.9/
L24
L24A3
/224.3
Allg_Reset_F26
-K1:MAN
A240.0
=SPS_F6&EFA1/269.2
=SPS_F6-A1
DO0
265_01_01_A_AS
-K2:11
A240.1
DO1
265_01_01_A_GS
-K3:11
A240.2
DO2
-Q1
Ir= 16-20A
Einst.: 20A
PKZM0-20
/223.6
265L1
265L2
265L3
/224.0
-K2
/223.8
-K3
/223.8
RS
-K1
Us
R
L
MAN
RES
AUT
ELR H5-I-SC- 24DC/500AC-2
0,87
1,63
0,18
2,4
I=1,63 A
Reset
GND
96
95
97
1/L1
3/L2
5/L3
2/T1
4/T2
6/T3
DI0
=SPS_F6-E1
=SPS_F6&EFA1/262.2
E240.0
-Q1:1.54
Allg_VS_265
DI1
E240.1
-K2:22
265_01_01_EL_AS
DI2
E240.2
-K3:22
265_01_01_EL_GS
DI3
E240.3
-K1:97
265_01_01_STG
M24
PE
=F6-X1
-W1
YSLY-JZ 04X1,5 GR
4x1,5
300/500 V
GNYE
U1
V1
W1
-M1
400V/50Hz/0,55kW/1,5A
mot. slide
-W2
YSLY-JZ 05X1 GR
5x1
300/500 V
=F6-X2
+AZD
-W3
4x0,34
-W4
4x0,34
BN
BU
WH
-BG1
Sn=5mm
L+
L-
Out
n.c.
10...36 VDC
IG512A
-BG2
open
Closed
/223.3
/223.4
/223.7
/223.8

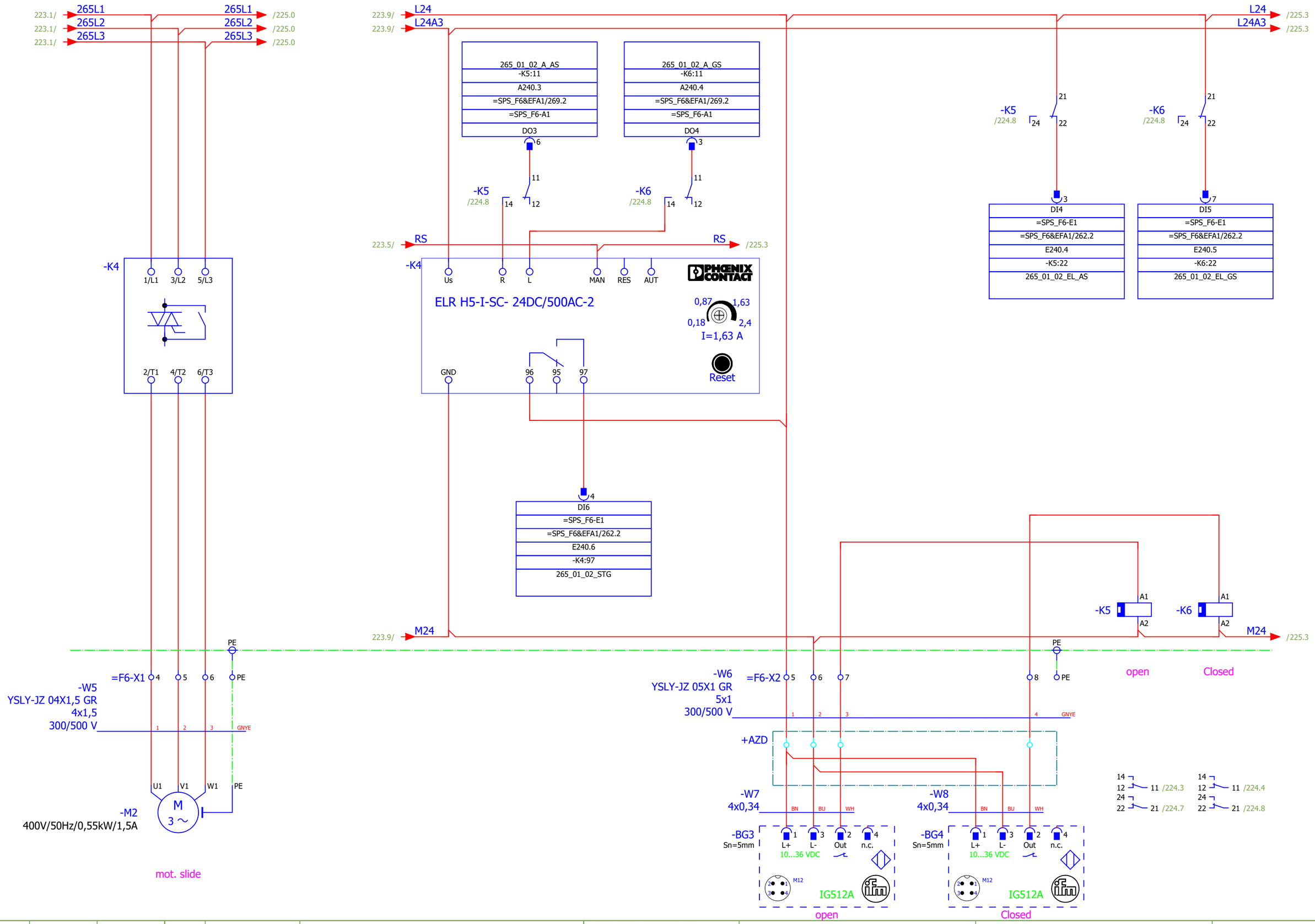

223

225

			Date	12.12.2019	Mixed feed plant Golden Poultry	BEYTEC ... your gateway to success	mot. slide 265.1.2
			Ed.	willen			
			Appr		Field 6		
Modification	Date	Name	Original	V:\EPLAN\Projekte\Company\Replace\Beytec\2018\Feed Mill Alssad.elk	Replaced by		

= 265.1
+ F26

1 : 1 | Part II | Page 224 | Page 605

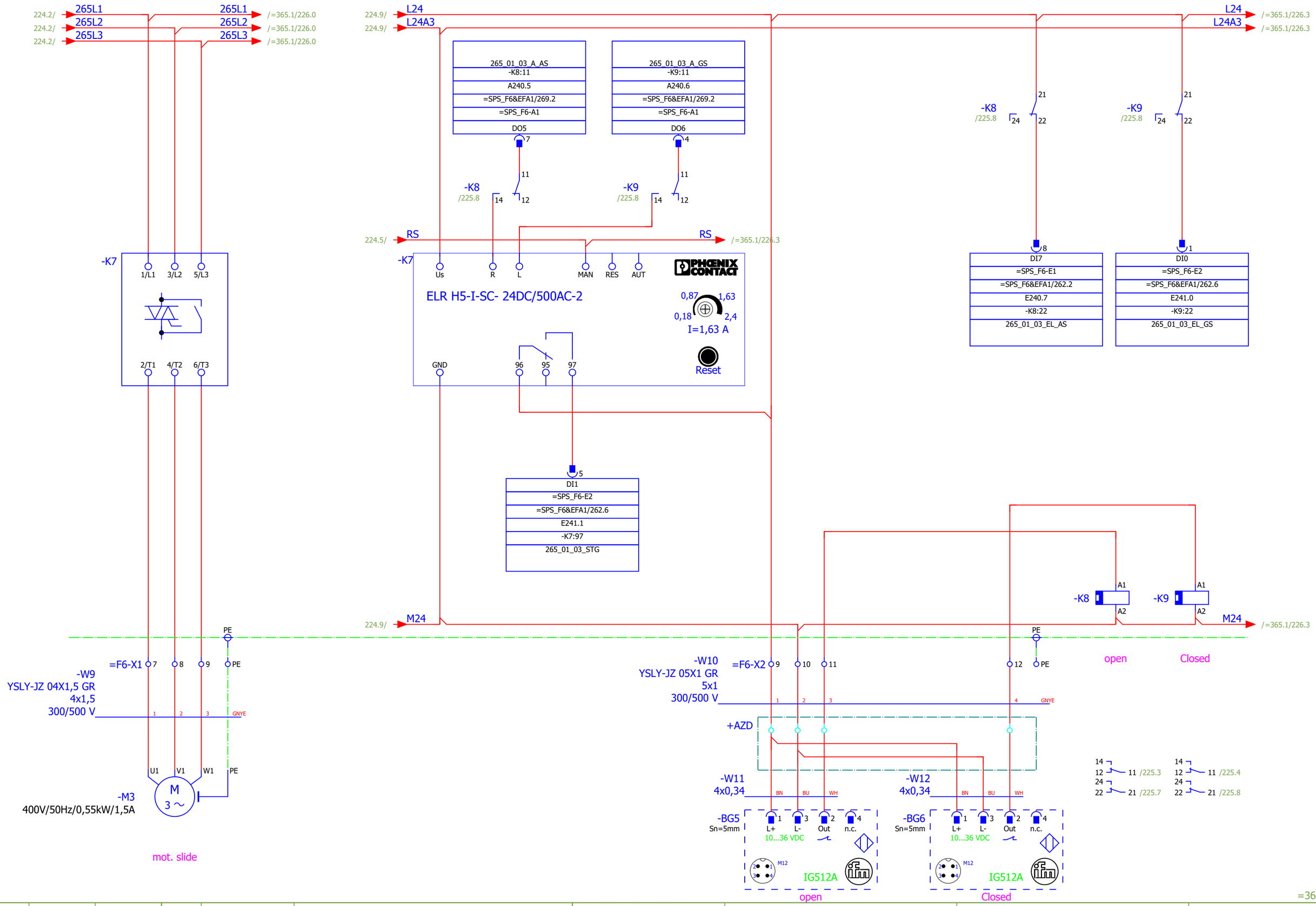

224

=365.1/226

			Date	12.12.2019	Mixed feed plant Golden Poultry	BEYTEC ... your gateway to success	mot. slide 265.1.3
			Ed.	willen			
			Appr		Field 6		
Modification	Date	Name	Original	V:\EPLAN\Projekte\Company\Replace\Beytec\2018\Feed Mill Alssad.elk	Replaced by		

= 265.1
+ F26
1 : 1
Part II
Page 225
Page 605

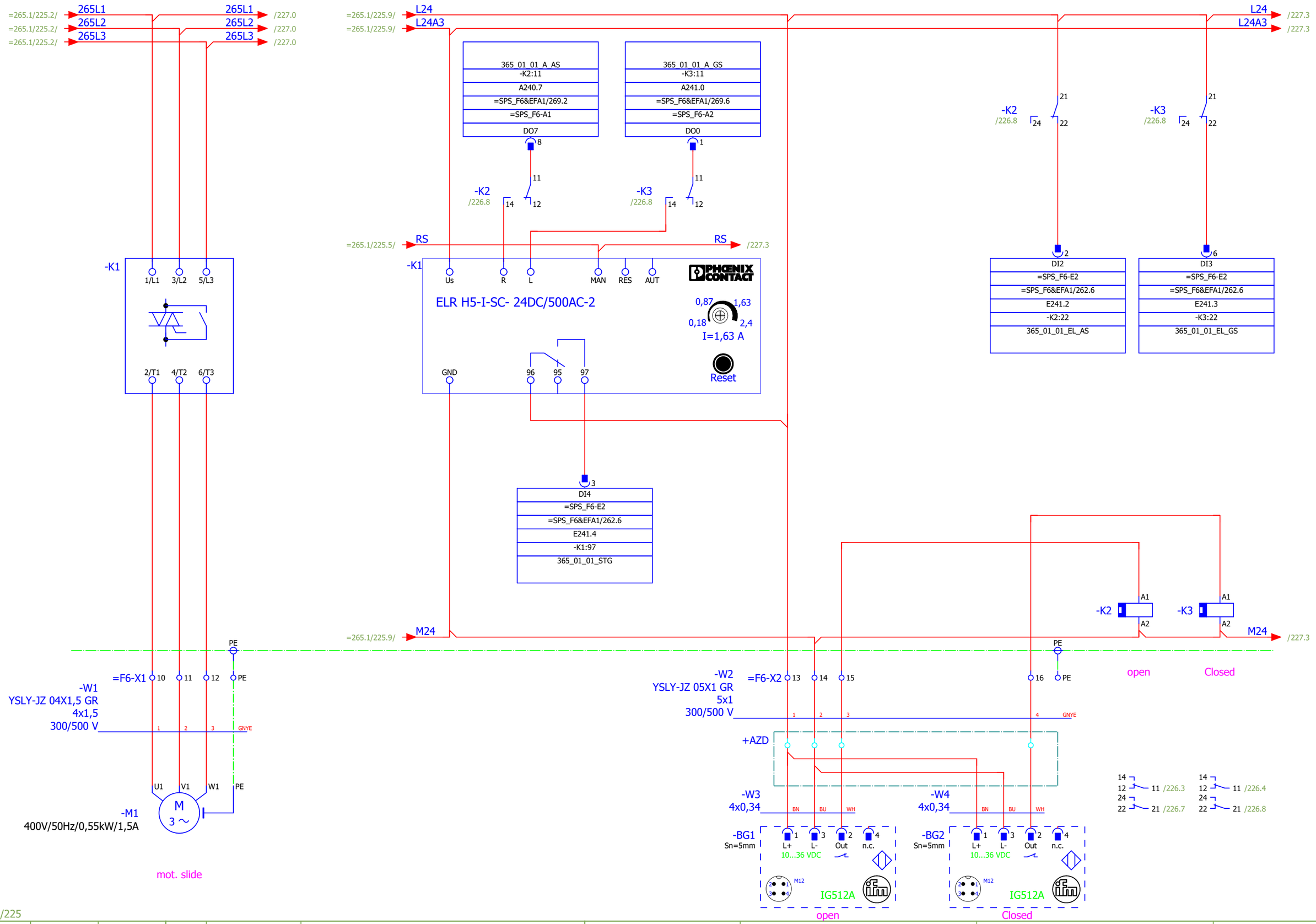

=265.1/225

227

			Date	12.12.2019	Mixed feed plant Golden Poultry	BEYTEC ... your gateway to success	mot. slide 365.1.1
			Ed.	willen			
			Appr		Field 6		
Modification	Date	Name	Original	V:\EPLAN\Projekte\Company\Replace\Beytec\2018\Feed Mill Alssad.elk	Replaced by		

= 365.1
+ F26

1 : 1 | Part II | Page 226 | Page 605

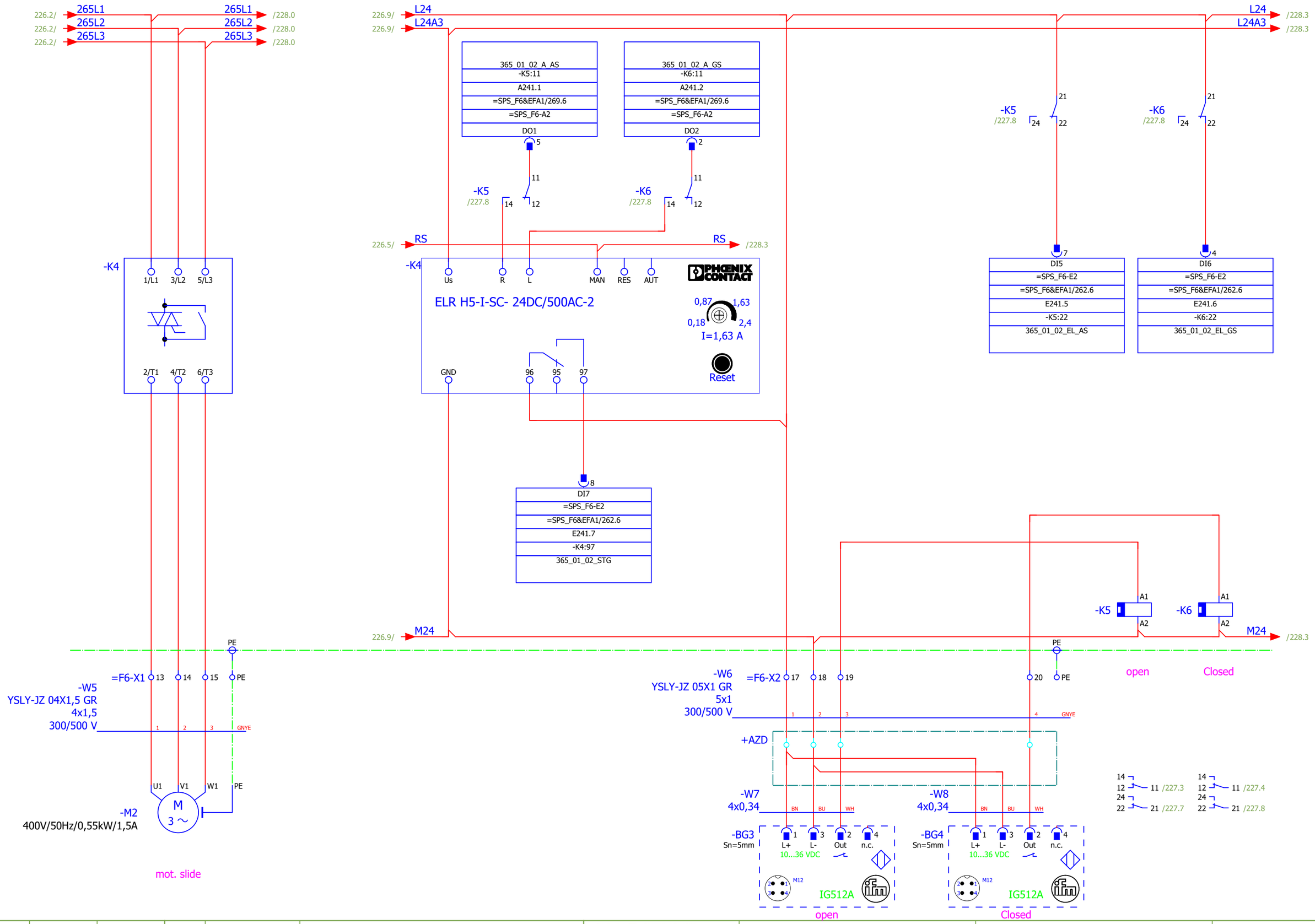

			Date	12.12.2019	Mixed feed plant Golden Poultry	BEYTEC ... your gateway to success	mot. slide 365.1.2	= 365.1	
			Ed.	willen				+ F26	
			Appr		Field 6			1 : 1	Part II	Page 227
Modification	Date	Name	Original	V:\EPLAN\Projekte\Company\Replace\Beytec\2018\Feed Mill Alssad.elk	Replaced by					Page 605

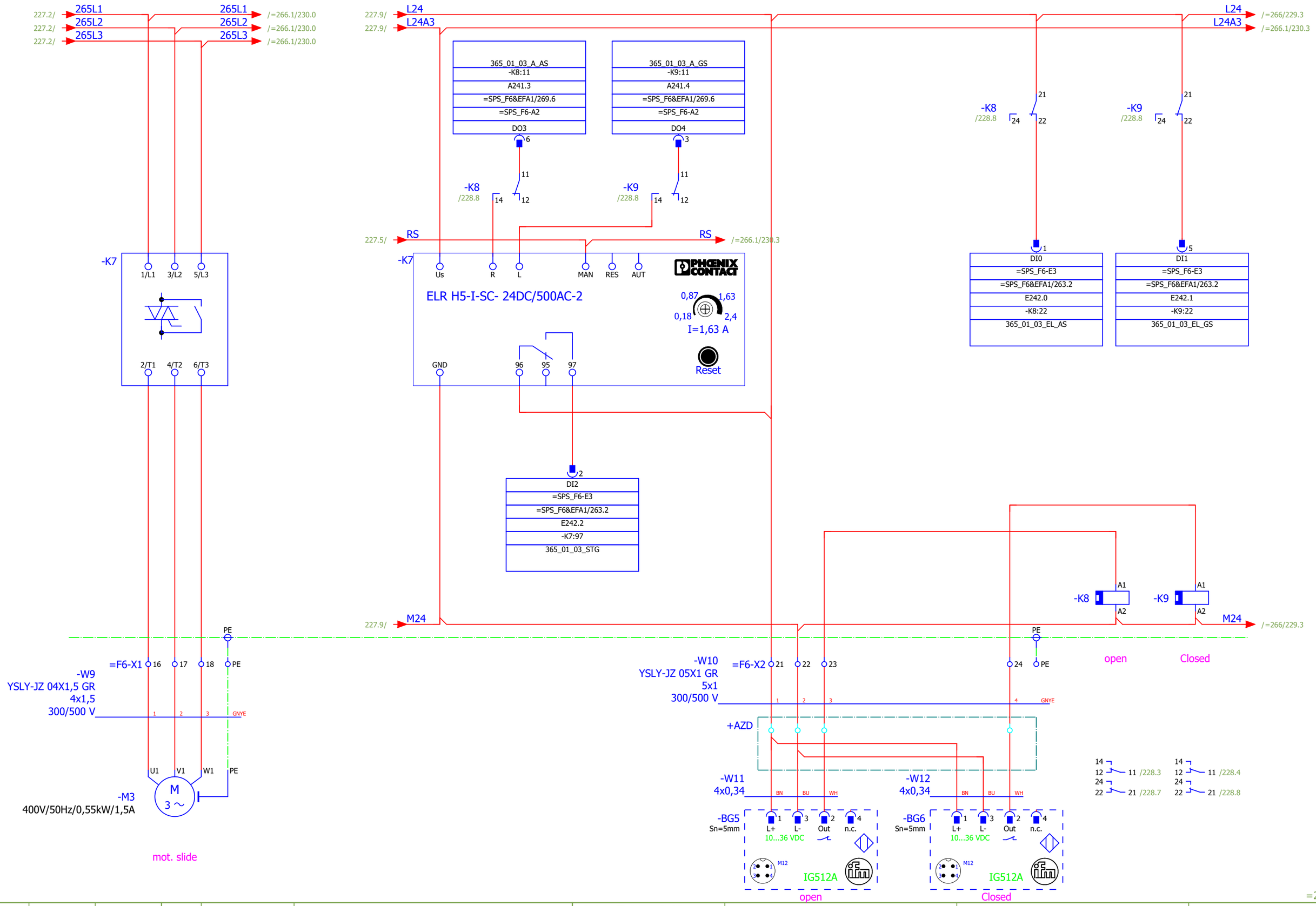

227

=266/229

			Date	12.12.2019	Mixed feed plant Golden Poultry	BEYTEC ... your gateway to success	mot. slide 365.1.3
			Ed.	willen			
			Appr		Field 6		
Modification	Date	Name	Original	V:\EPLAN\Projekte\Company\Replace\Beytec\2018\Feed Mill Alssad.elk	Replaced by		

= 365.1
+ F26
1 : 1
Part II
Page 228
Page 605

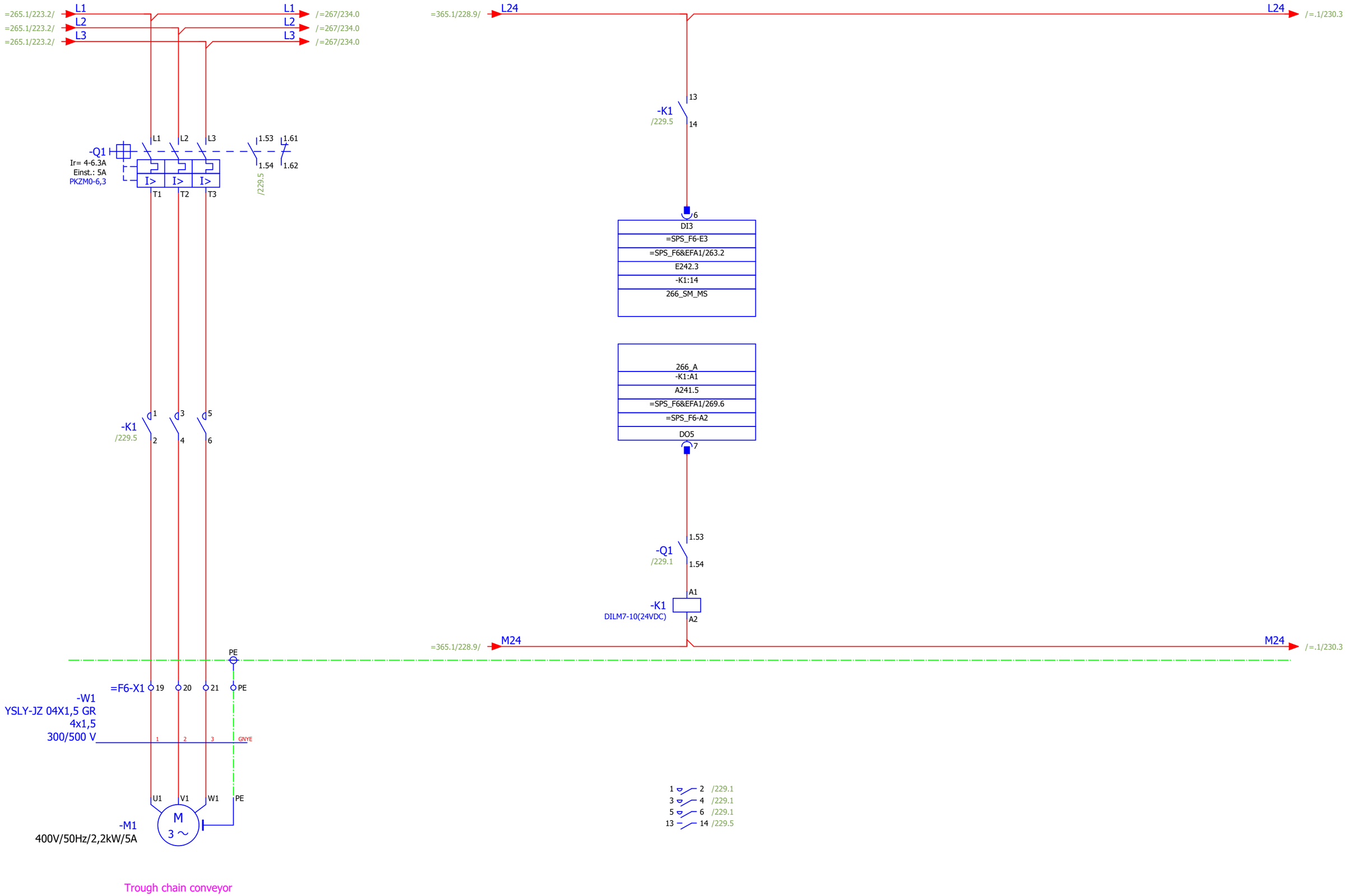

Trough chain conveyor

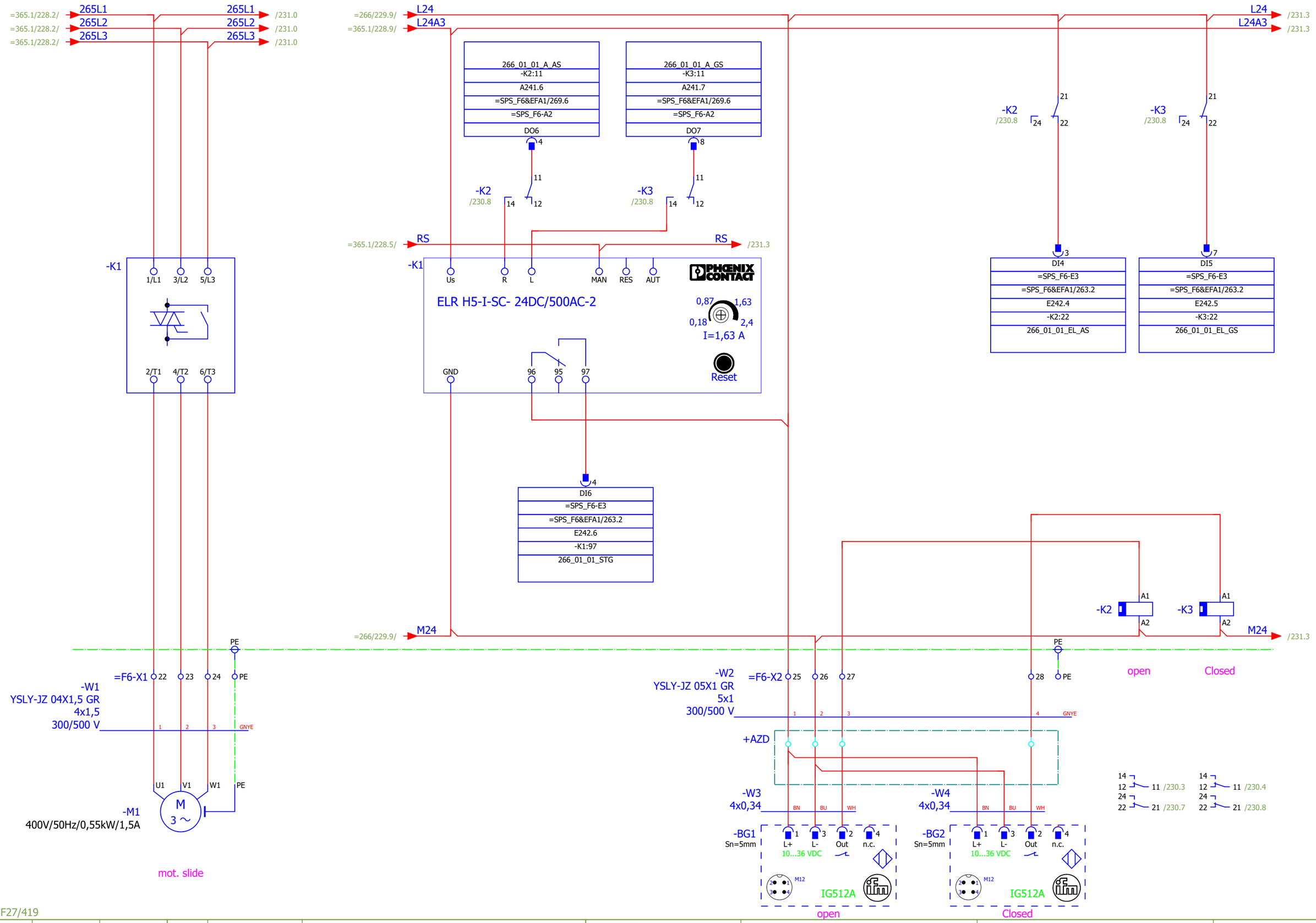

=266+F27/419

231

			Date	12.12.2019	Mixed feed plant Golden Poultry	BEYTEC ... your gateway to success	mot. slide 1	= 266.1	
			Ed.	willen				+ F26	
			Appr		Field 6		1 : 1	Part II	Page 230
Modification	Date	Name	Original	V:\EPLAN\Projekte\Company\Replace\Beytec\2018\Feed Mill Alssad.elk	Replaced by				Page 605

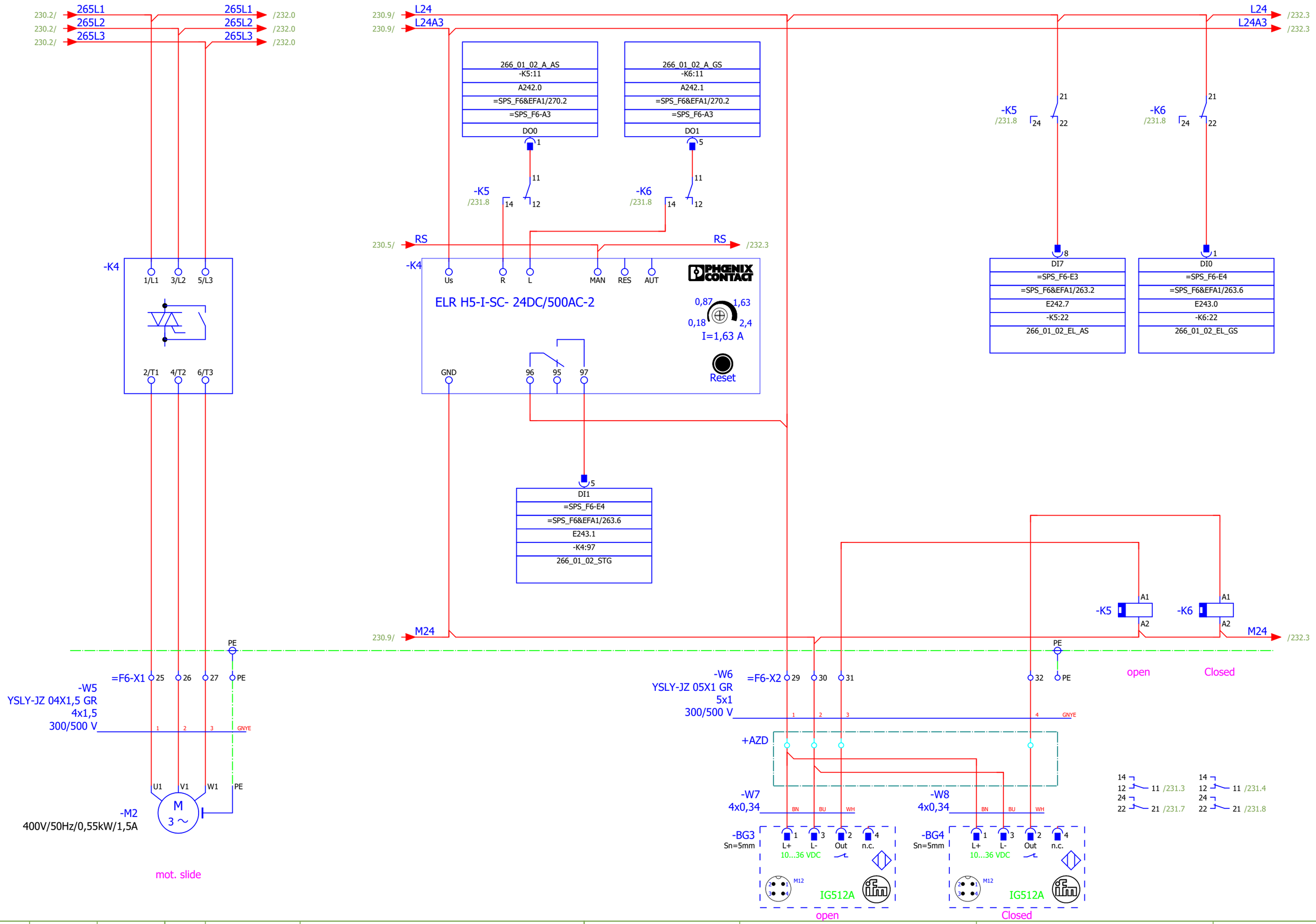

230

232

			Date	12.12.2019	Mixed feed plant Golden Poultry	BEYTEC ... your gateway to success	mot. slide 2
			Ed.	willen			
			Appr		Field 6		
Modification	Date	Name	Original	V:\EPLAN\Projekte\Company\Replace\Beytec\2018\Feed Mill Alssad.elk	Replaced by		

= 266.1
+ F26
1 : 1
Part II
Page 231
Page 605

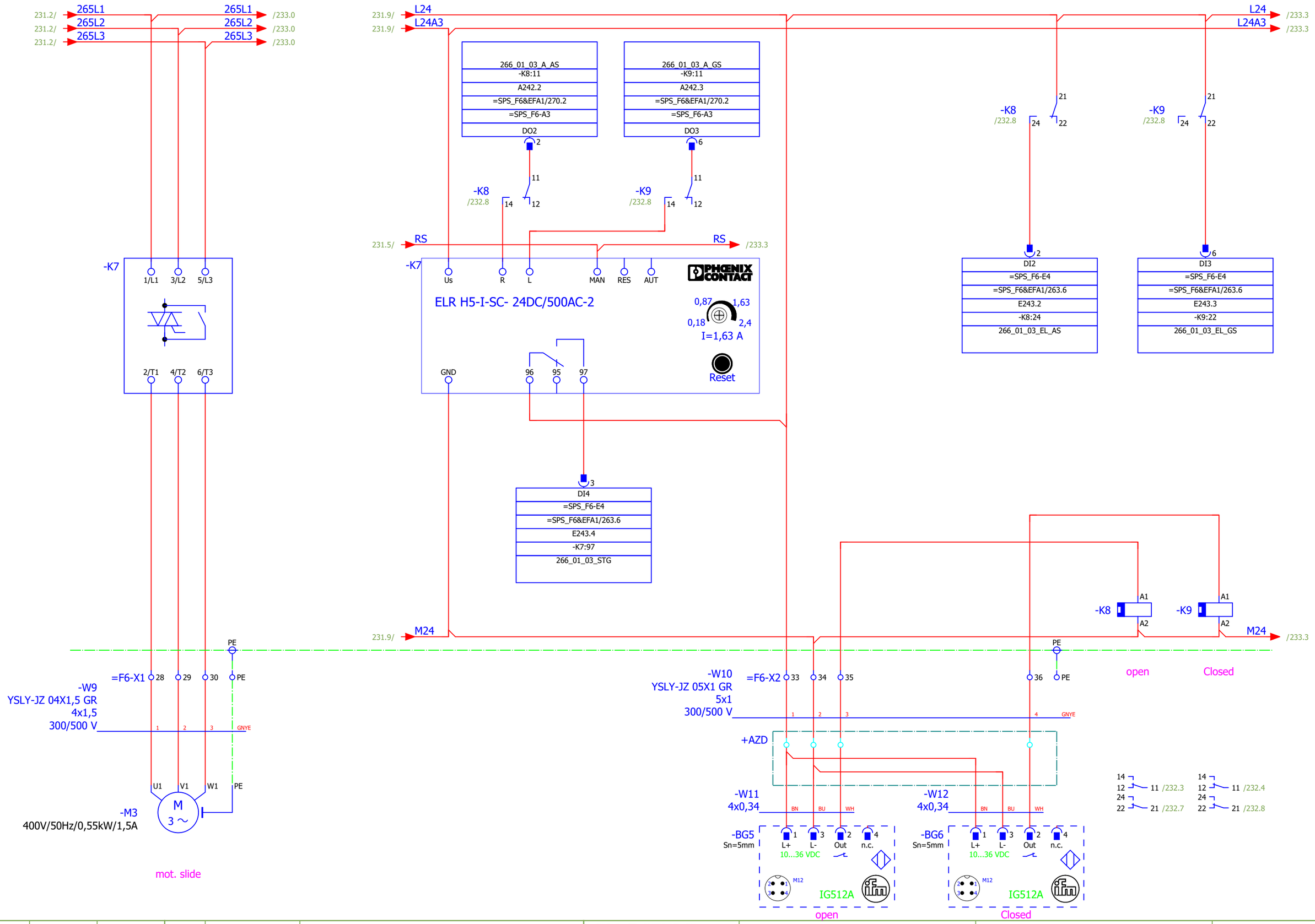

231

233

			Date	12.12.2019	Mixed feed plant Golden Poultry	BEYTEC ... your gateway to success	mot. slide 3
			Ed.	willen			
			Appr		Field 6		
Modification	Date	Name	Original	V:\EPLAN\Projekte\Company\Replace\Beytec\2018\Feed Mill Alssad.elk	Replaced by		

= 266.1
+ F26

1 : 1 | Part II | Page 232 | Page 605

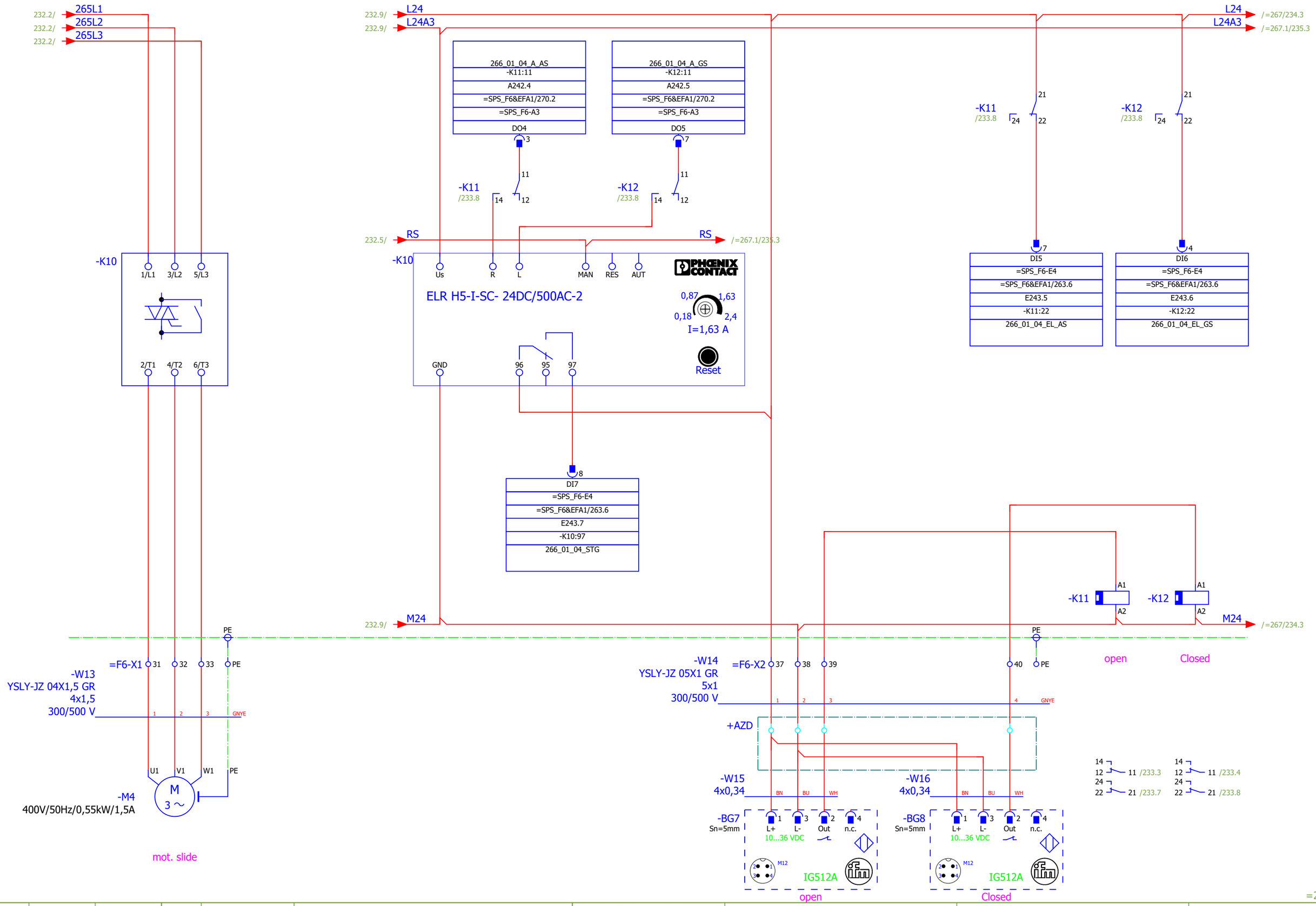

232

=267/234

			Date	12.12.2019	Mixed feed plant Golden Poultry	BEYTEC ... your gateway to success	mot. slide 4
			Ed.	willen			
			Appr		Field 6		
Modification	Date	Name	Original	V:\EPLAN\Projekte\Company\Replace\Beytec\2018\Feed Mill Alssad.elk	Replaced by		

= 266.1
+ F26
1 : 1
Part II
Page 233
Page 605

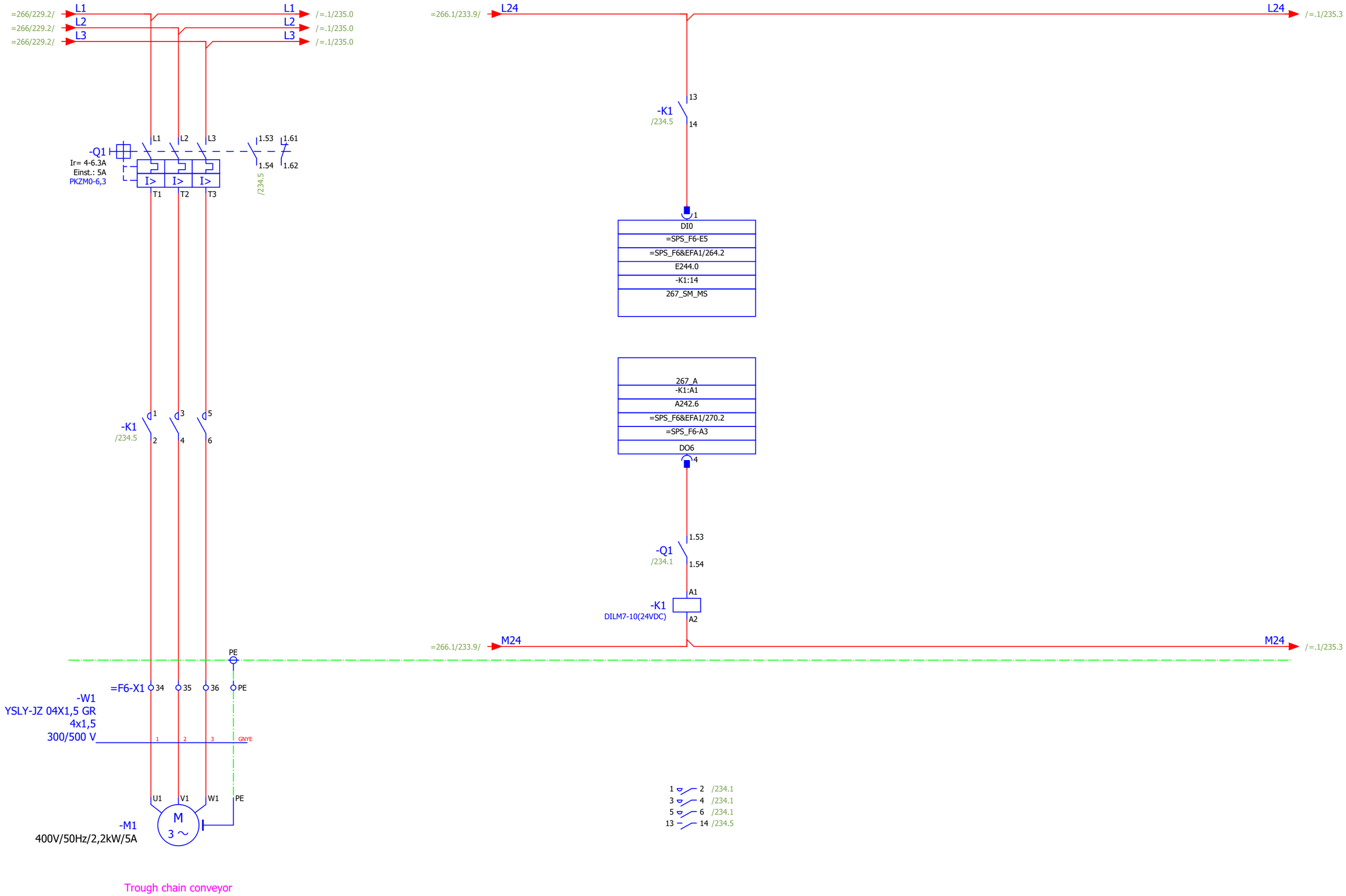
=266/229.2/
L1
L2
L3
/=.1/235.0
=266.1/233.9/
L24
/=.1/235.3
-K1
/234.5
13
14
-Q1
Ir= 4-6.3A
Einst.: 5A
PKZM0-6,3
1.53
1.54
1.61
1.62
/234.5
I>
T1
T2
T3
DI0
=SPS_F6-E5
=SPS_F6&EFA1/264.2
E244.0
-K1:14
267_SM_MS
267_A
-K1:A1
A242.6
=SPS_F6&EFA1/270.2
=SPS_F6-A3
DO6
-Q1
/234.1
A1
A2
DILM7-10(24VDC)
M24
PE
=F6-X1
34
35
36
-W1
YSLY-JZ 04X1,5 GR
4x1,5
300/500 V
GNYE
U1
V1
W1
-M1
400V/50Hz/2,2kW/5A
M
3 ~
/234.1
/234.5
Trough chain conveyor

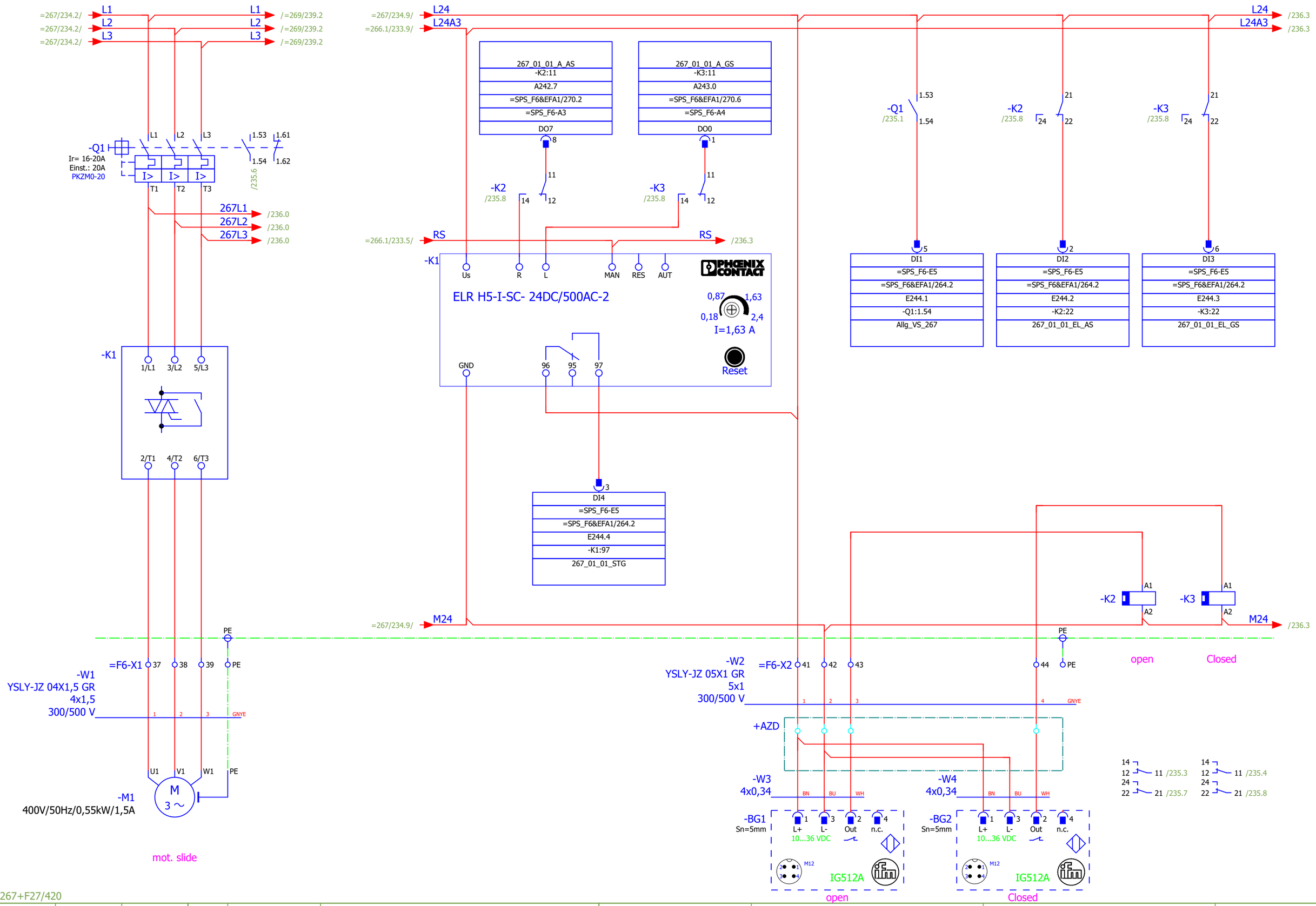

=267+F27/420

236

			Date	12.12.2019	Mixed feed plant Golden Poultry	BEYTEC ... your gateway to success	mot. slide 267.1.1	= 267.1	
			Ed.	willen				+ F26	
			Appr		Field 6			1 : 1 / Part II	Page 235
Modification	Date	Name	Original	V:\EPLAN\Projekte\Company\Replace\Beytec\2018\Feed Mill Alssad.elk	Replaced by				Page 605

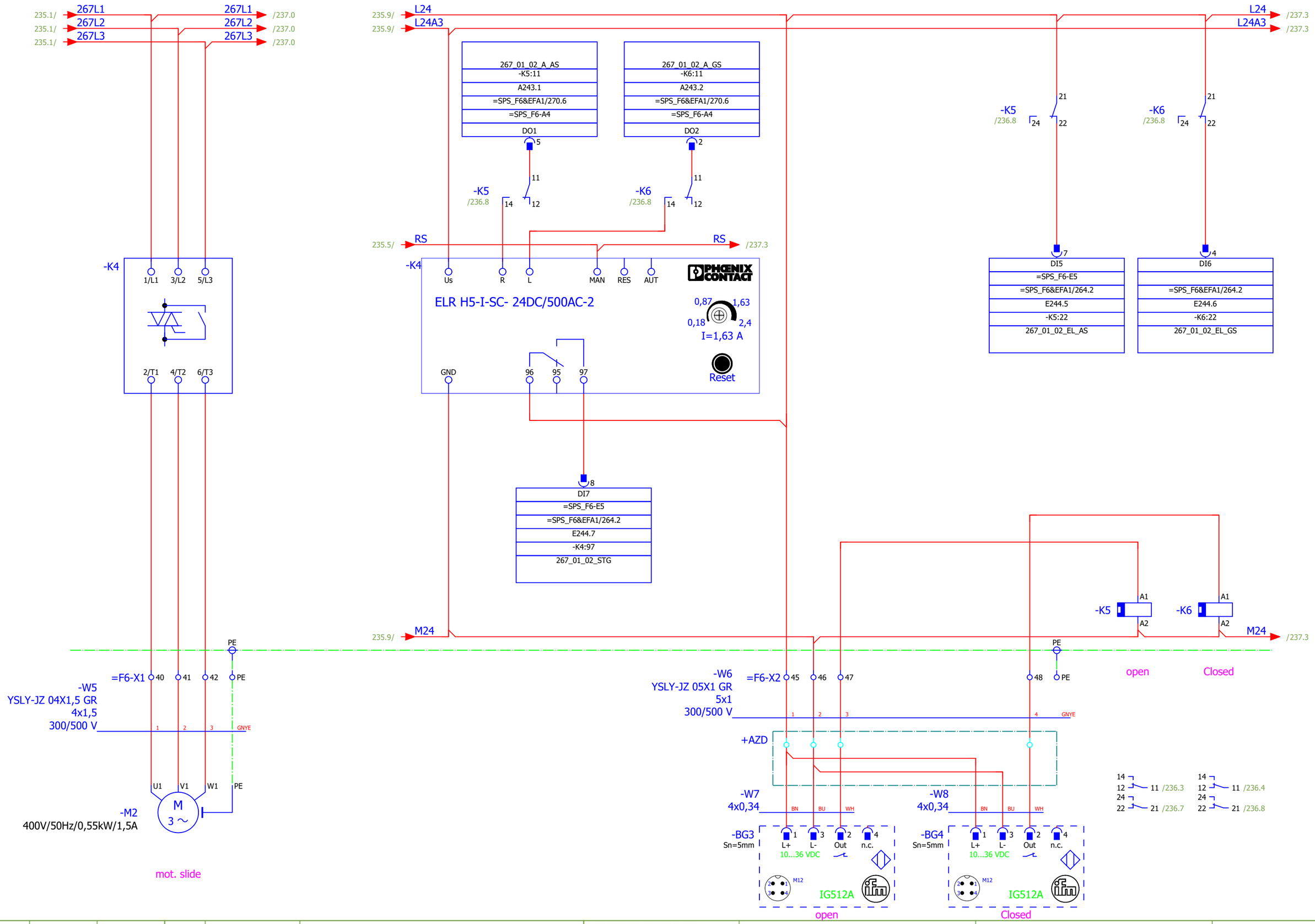

235 237

			Date	12.12.2019	Mixed feed plant Golden Poultry	BEYTEC ... your gateway to success	mot. slide 267.1.2
			Ed.	willen	Field 6		
			Appr				
Modification	Date	Name	Original	V:\EPLAN\Projekte\Company\Replace\Beytec\2018\Feed Mill Alssad.elk	Replaced by		

= 267.1
+ F26
1 : 1
Part II
Page 236
Page 605

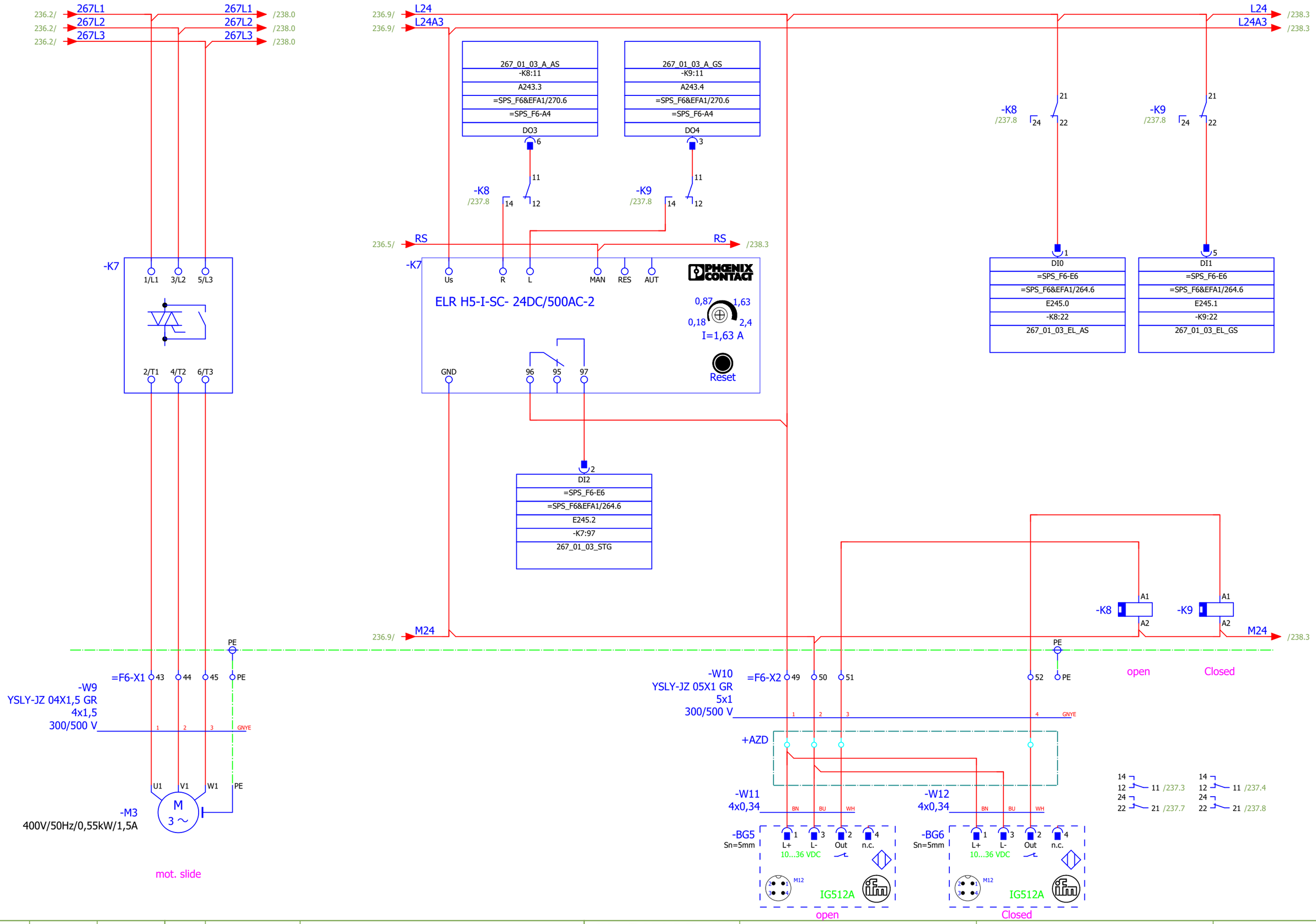

236 238

			Date	12.12.2019	Mixed feed plant Golden Poultry	BEYTEC ... your gateway to success	mot. slide 267.1.3
			Ed.	willen	Field 6		
			Appr				
Modification	Date	Name	Original	V:\EPLAN\Projekte\Company\Beytec\2018\Feed Mill Alssad.elk	Replaced by		

= 267.1
+ F26
1 : 1
Part II
Page 237
Page 605

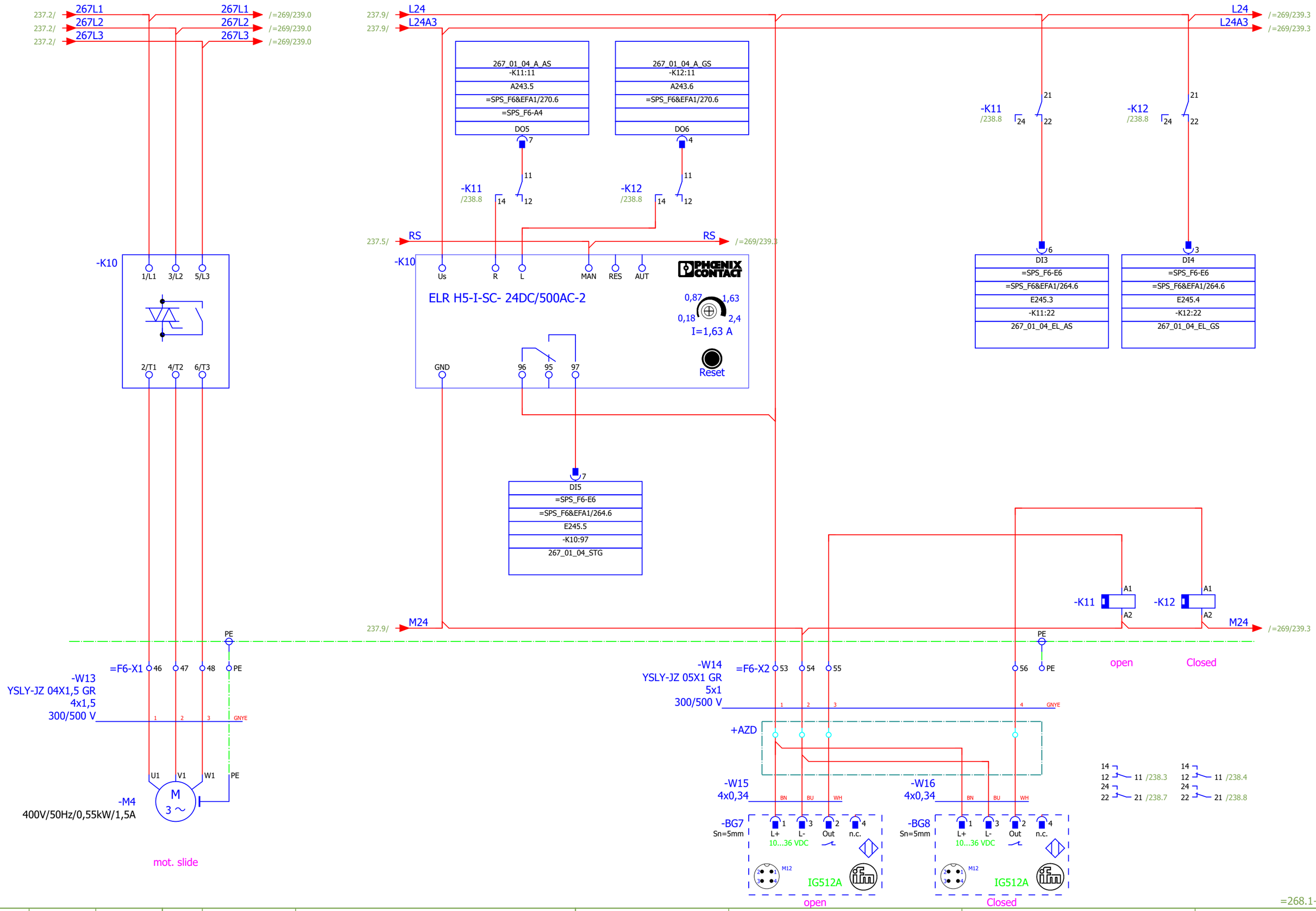

=268.1+F27/421

			Date	12.12.2019	Mixed feed plant Golden Poultry	BEYTEC ... your gateway to success	mot. slide 267.1.4
			Ed.	willen			
			Appr		Field 6		
Modification	Date	Name	Original	V:\EPLAN\Projekte\Company\Replace\Beytec\2018\Feed Mill Alssad.elk	Replaced by		

= 267.1
+ F26
1 : 1
Part II
Page 238
Page 605

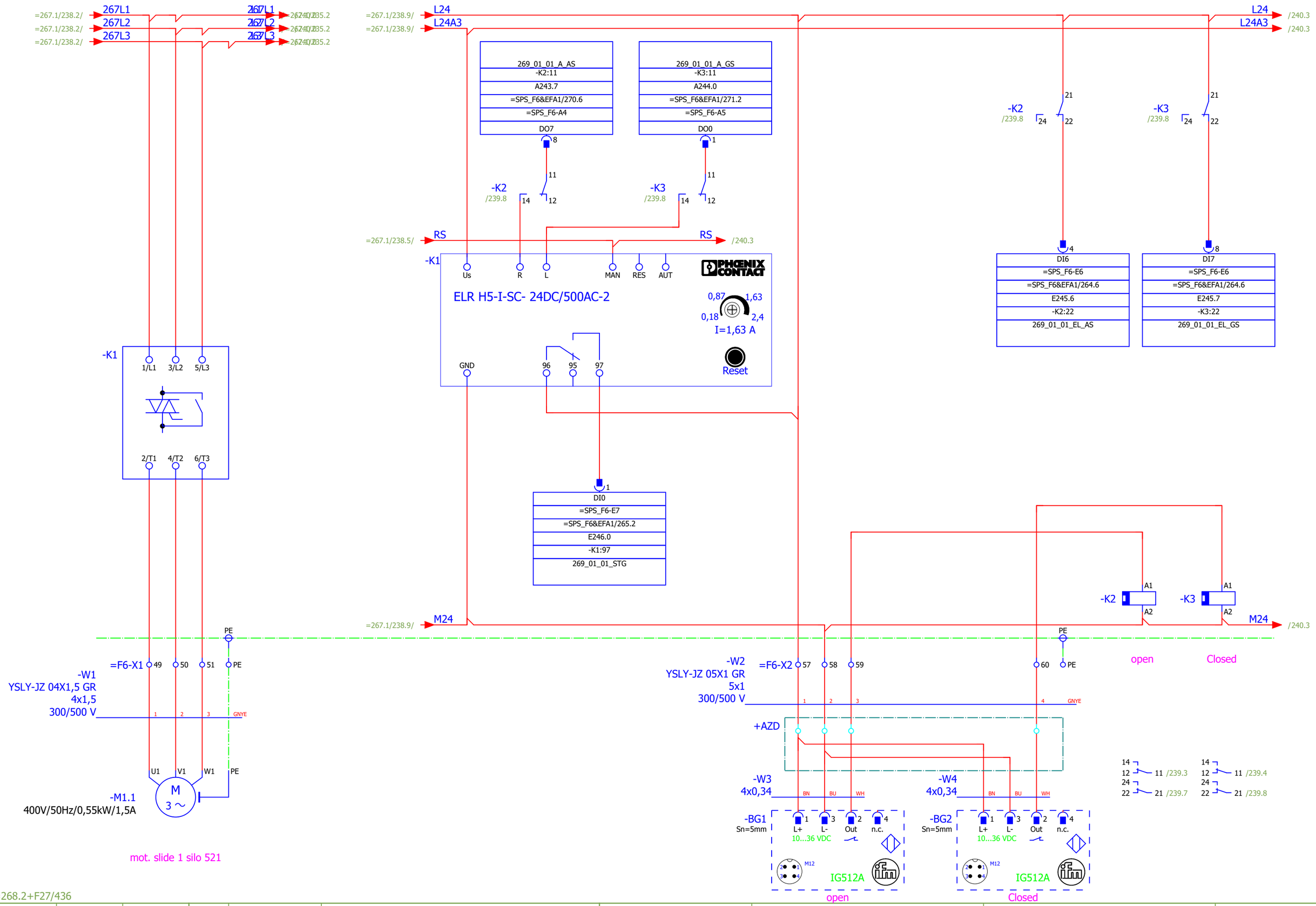

=268.2+F27/436

240

			Date	12.12.2019	Mixed feed plant Golden Poultry	BEYTEC ... your gateway to success	mot. slide 269.1.1	= 269	
			Ed.	willen				+ F26	
			Appr		Field 6		1 : 1	Part II	Page 239
Modification	Date	Name	Original	V:\EPLAN\Projekte\Company\Replace\Beytec\2018\Feed Mill Alssad.elk	Replaced by				Page 605

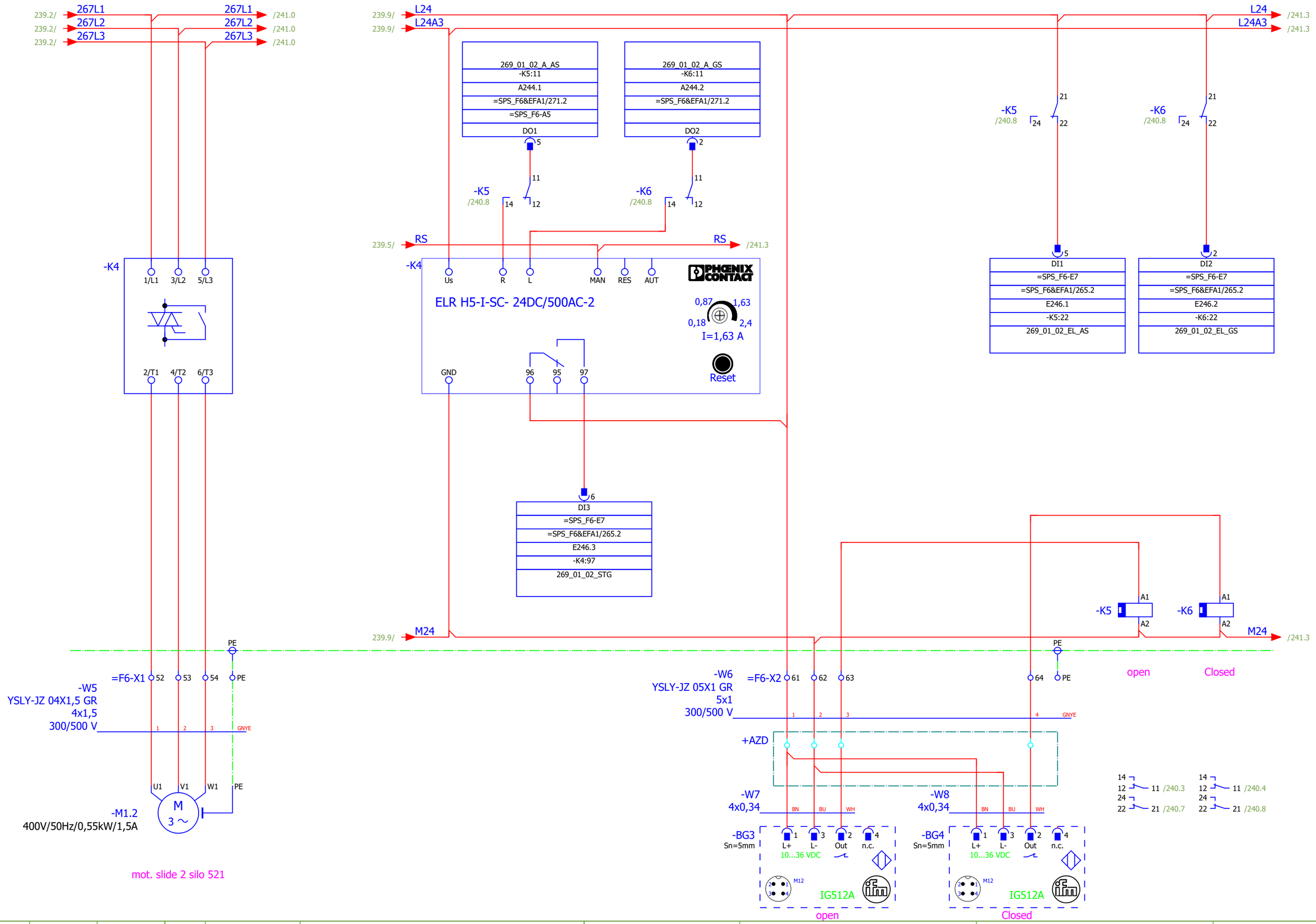

239 241

			Date	12.12.2019	Mixed feed plant Golden Poultry	BEYTEC ... your gateway to success	mot. slide 269.1.2
			Ed.	willen	Field 6		
			Appr				
Modification	Date	Name	Original	V:\EPLAN\Projekte\Company\Replace\Beytec\2018\Feed Mill Alssad.elk	Replaced by		

= 269
+ F26
1 : 1
Part II
Page 240
Page 605

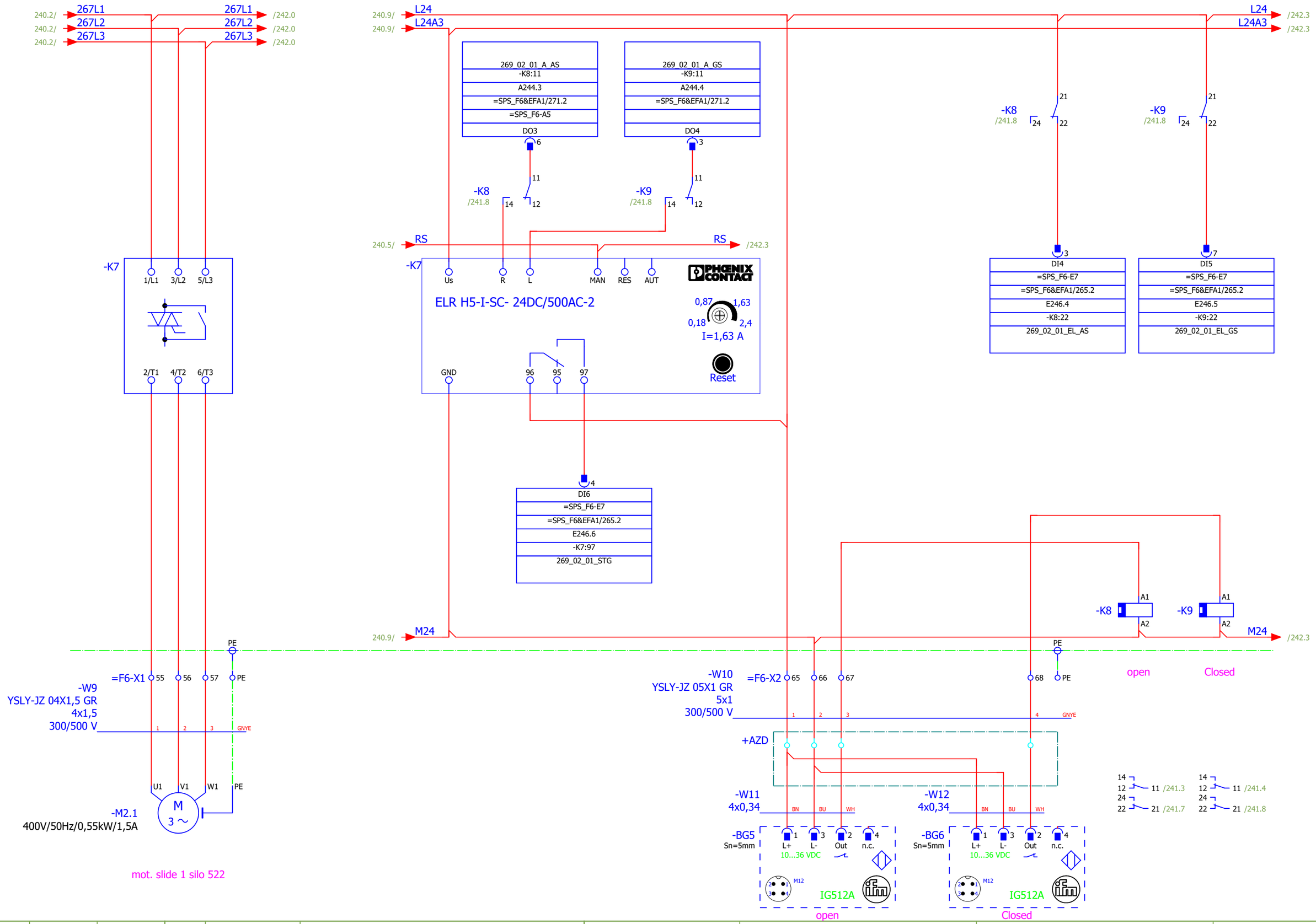

			Date	12.12.2019	Mixed feed plant Golden Poultry	BEYTEC ... your gateway to success	mot. slide 269.2.1
			Ed.	willen	Field 6		
			Appr				
Modification	Date	Name	Original	V:\EPLAN\Projekte\Company\Replace\Beytec\2018\Feed Mill Alssad.elk	Replaced by		

= 269
+ F26
1 : 1
Part II
Page 241
Page 605

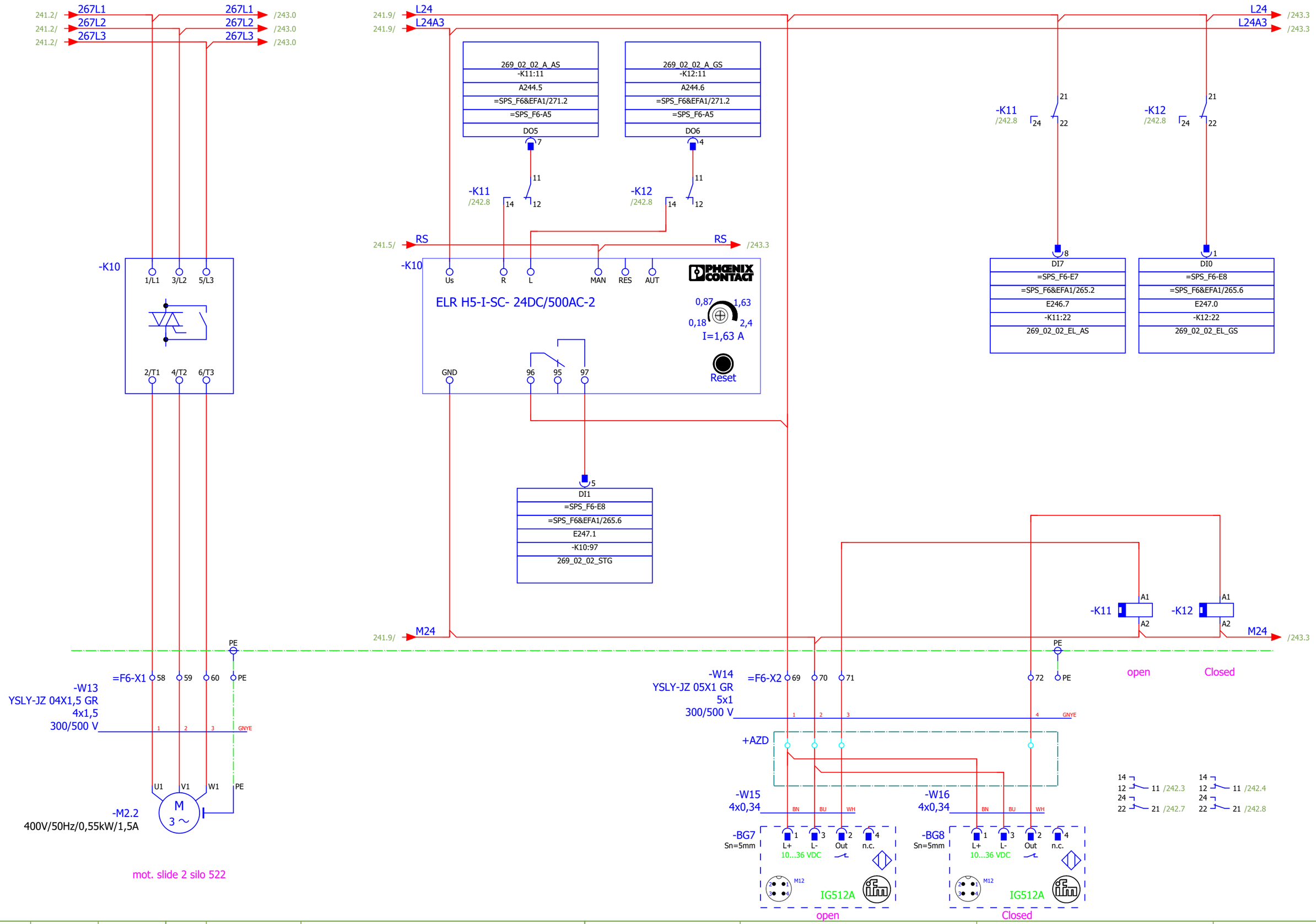

241 243

			Date	12.12.2019	Mixed feed plant Golden Poultry	BEYTEC ... your gateway to success	mot. slide 269.2.2	= 269	
			Ed.	willen				+ F26	
			Appr		Field 6			1 : 1	Part II	Page 242
Modification	Date	Name	Original	V:\EPLAN\Projekte\Company\Replace\Beytec\2018\Feed Mill Alssad.elk	Replaced by					Page 605

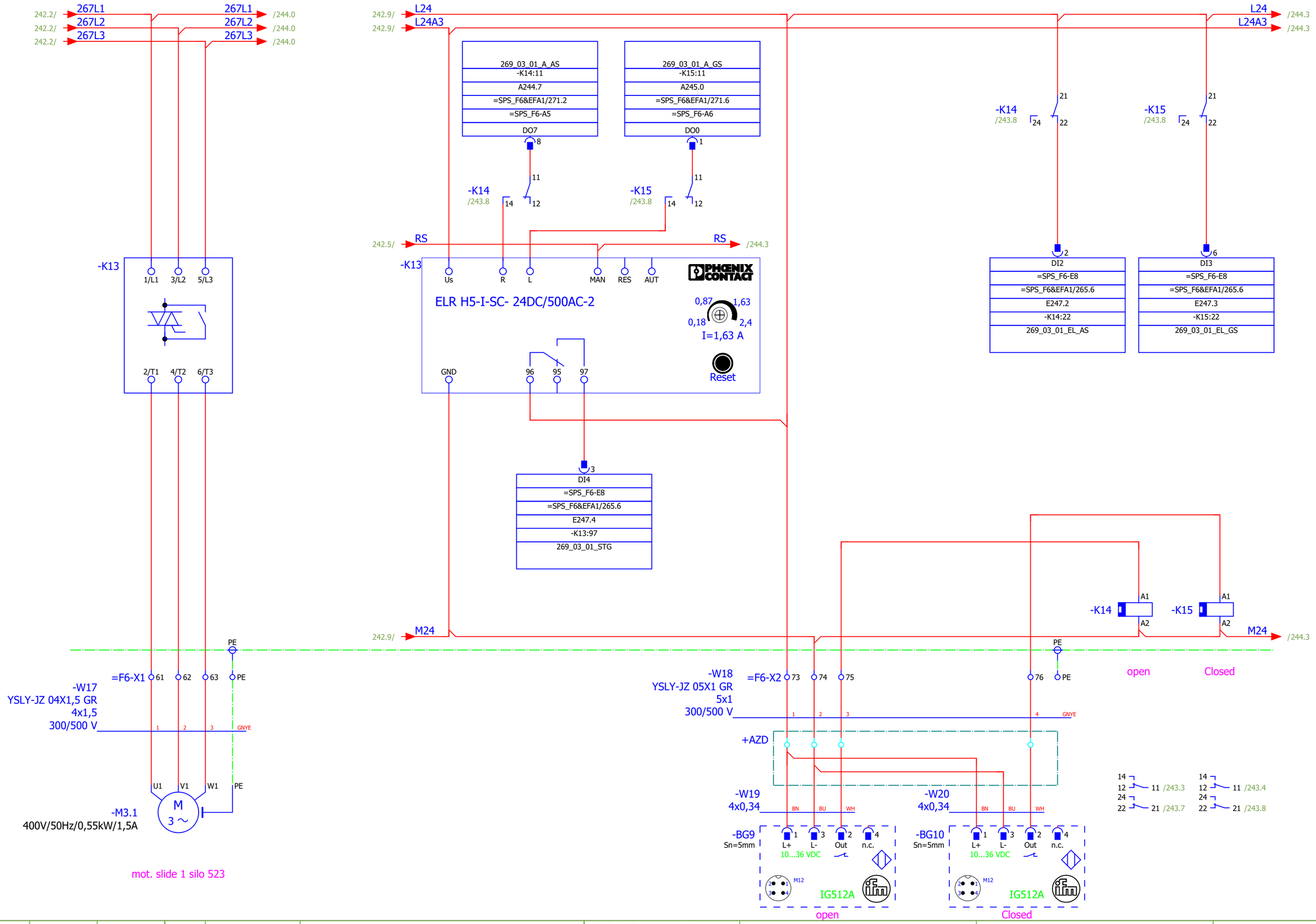

242

244

			Date	12.12.2019	Mixed feed plant Golden Poultry	BEYTEC ... your gateway to success	mot. slide 269.3.1
			Ed.	willen	Field 6		
			Appr				
Modification	Date	Name	Original	V:\EPLAN\Projekte\Company\Beytec\2018\Feed Mill Alssad.elk	Replaced by		

= 269
+ F26
1 : 1
Part II
Page 243
Page 605

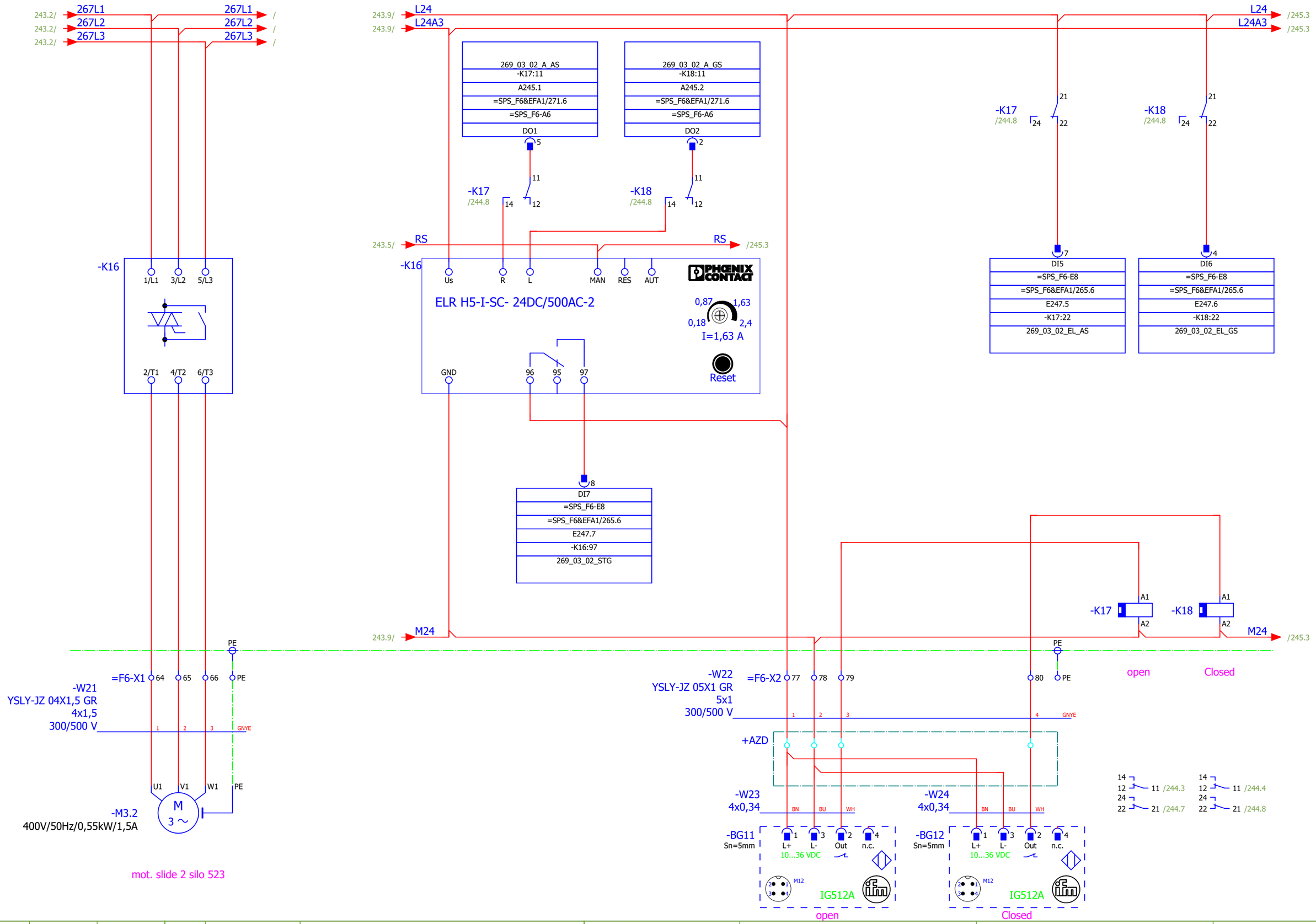

243 245

			Date	12.12.2019	Mixed feed plant Golden Poultry	BEYTEC ... your gateway to success	mot. slide 269.3.2
			Ed.	willen	Field 6		
			Appr				
Modification	Date	Name	Original	V:\EPLAN\Projekte\Company\Replace\Beytec\2018\Feed Mill Alssad.elk	Replaced by		

= 269
+ F26
1 : 1
Part II
Page 244
Page 605

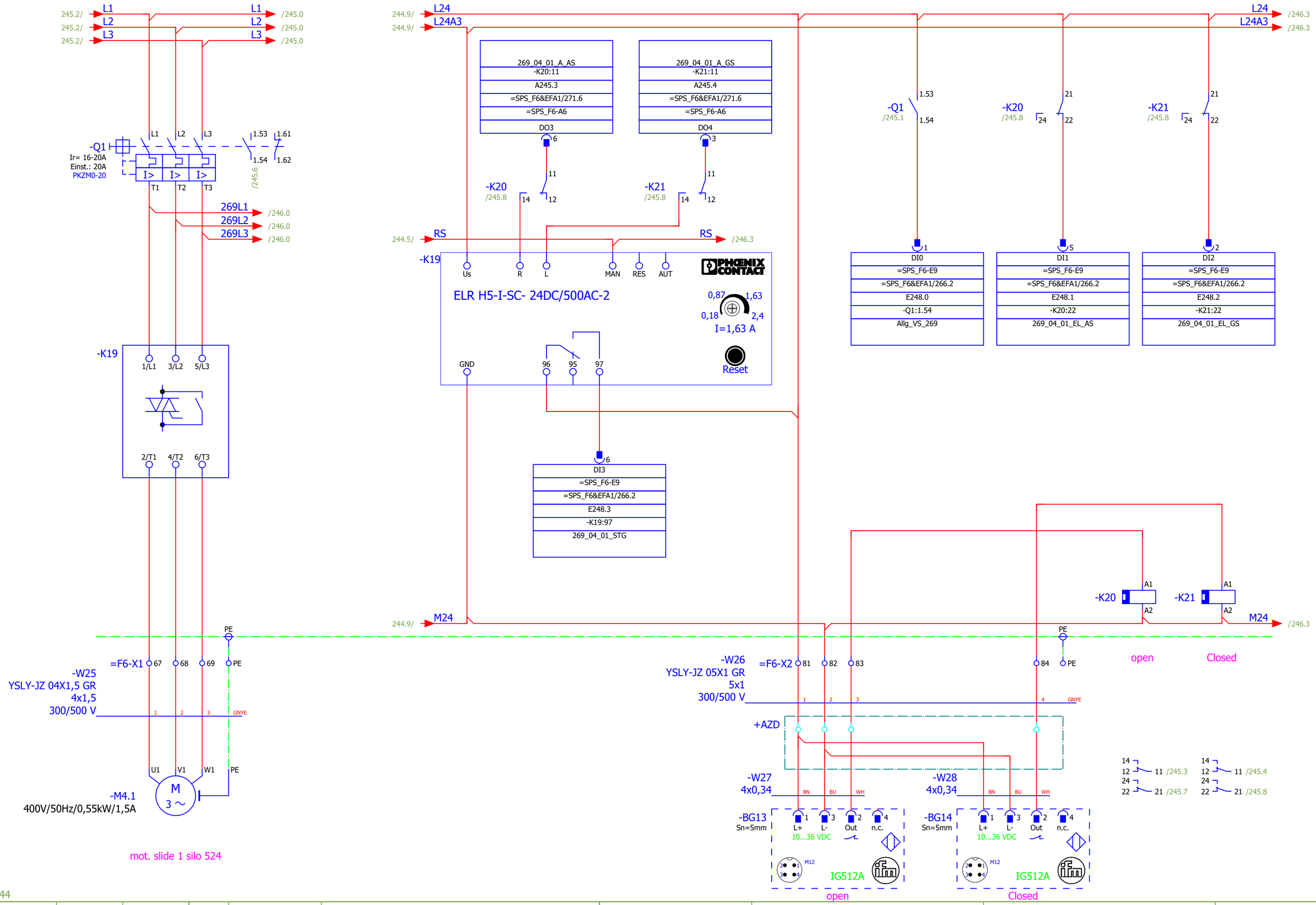

244 246

			Date	12.12.2019	Mixed feed plant Golden Poultry	BEYTEC ... your gateway to success	mot. slide 269.4.1
			Ed.	willen	Field 6		
			Appr				
Modification	Date	Name	Original	V:\EPLAN\Projekte\Company\Beytec\2018\Feed Mill Alssad.elk	Replaced by		

= 269
+ F26
1 : 1
Part II
Page 245
Page 605

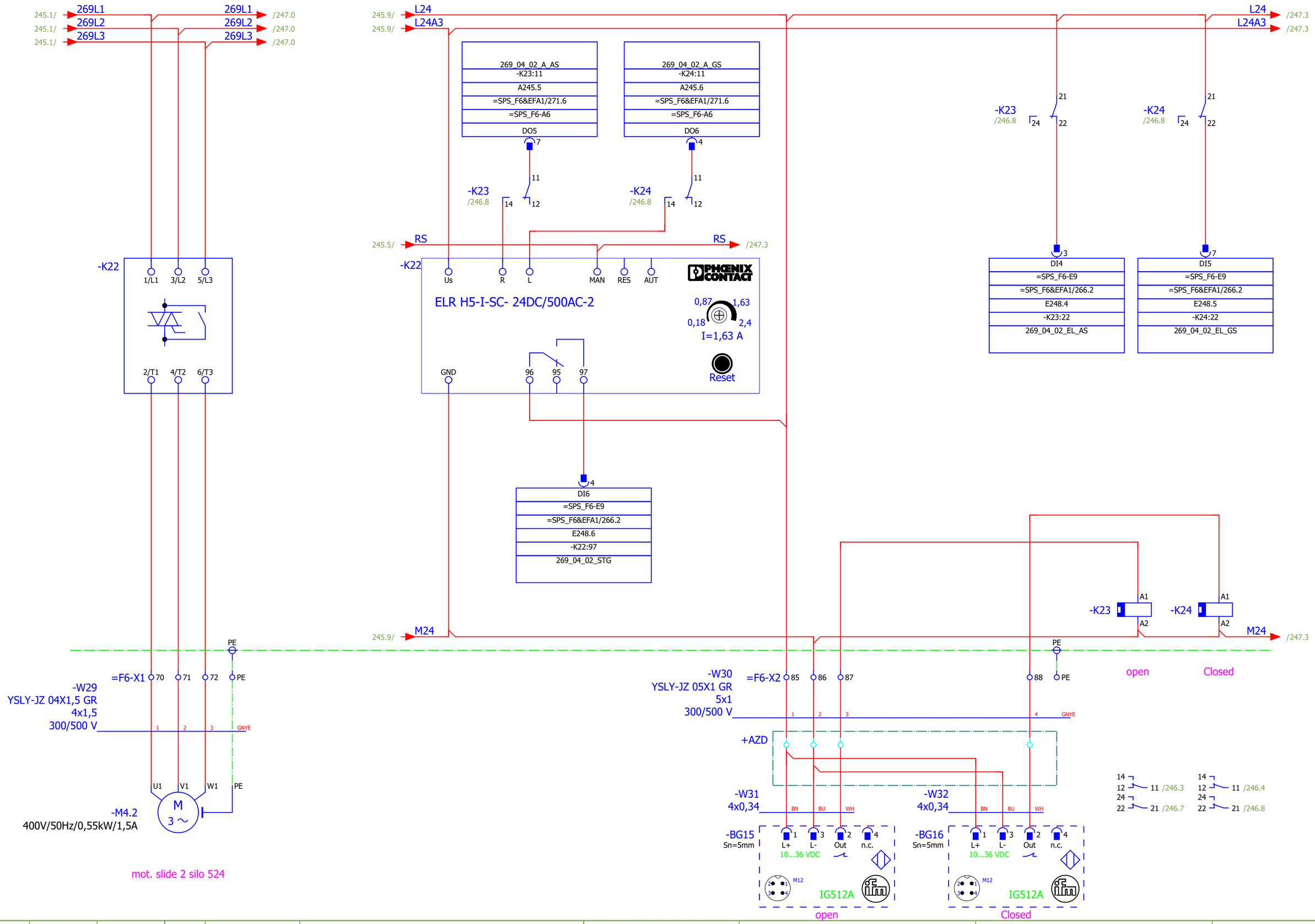

245 247

			Date	12.12.2019	Mixed feed plant Golden Poultry	BEYTEC ... your gateway to success	mot. slide 269.4.2	= 269	
			Ed.	willen				+ F26	
			Appr		Field 6			1 : 1 Part II	Page 246
Modification	Date	Name	Original	V:\EPLAN\Projekte\Company\Replace\Beytec\2018\Feed Mill Alssad.elk	Replaced by				Page 605

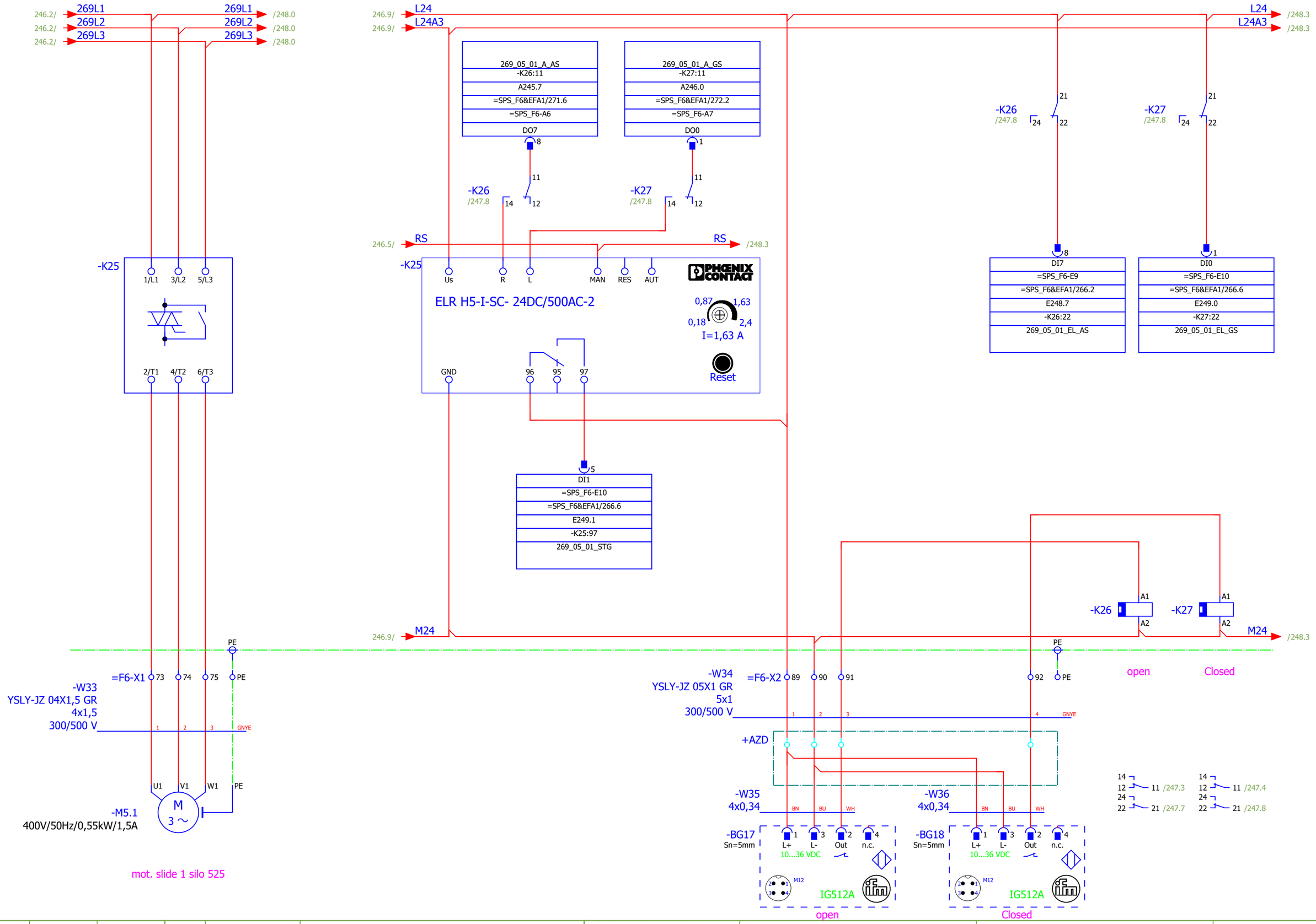

246

248

			Date	12.12.2019	Mixed feed plant Golden Poultry	BEYTEC ... your gateway to success	mot. slide 269.5.1
			Ed.	willen	Field 6		
			Appr				
Modification	Date	Name	Original	V:\EPLAN\Projekte\Company\Beytec\2018\Feed Mill Alssad.elk	Replaced by		

= 269
+ F26
1 : 1
Part II
Page 247
Page 605

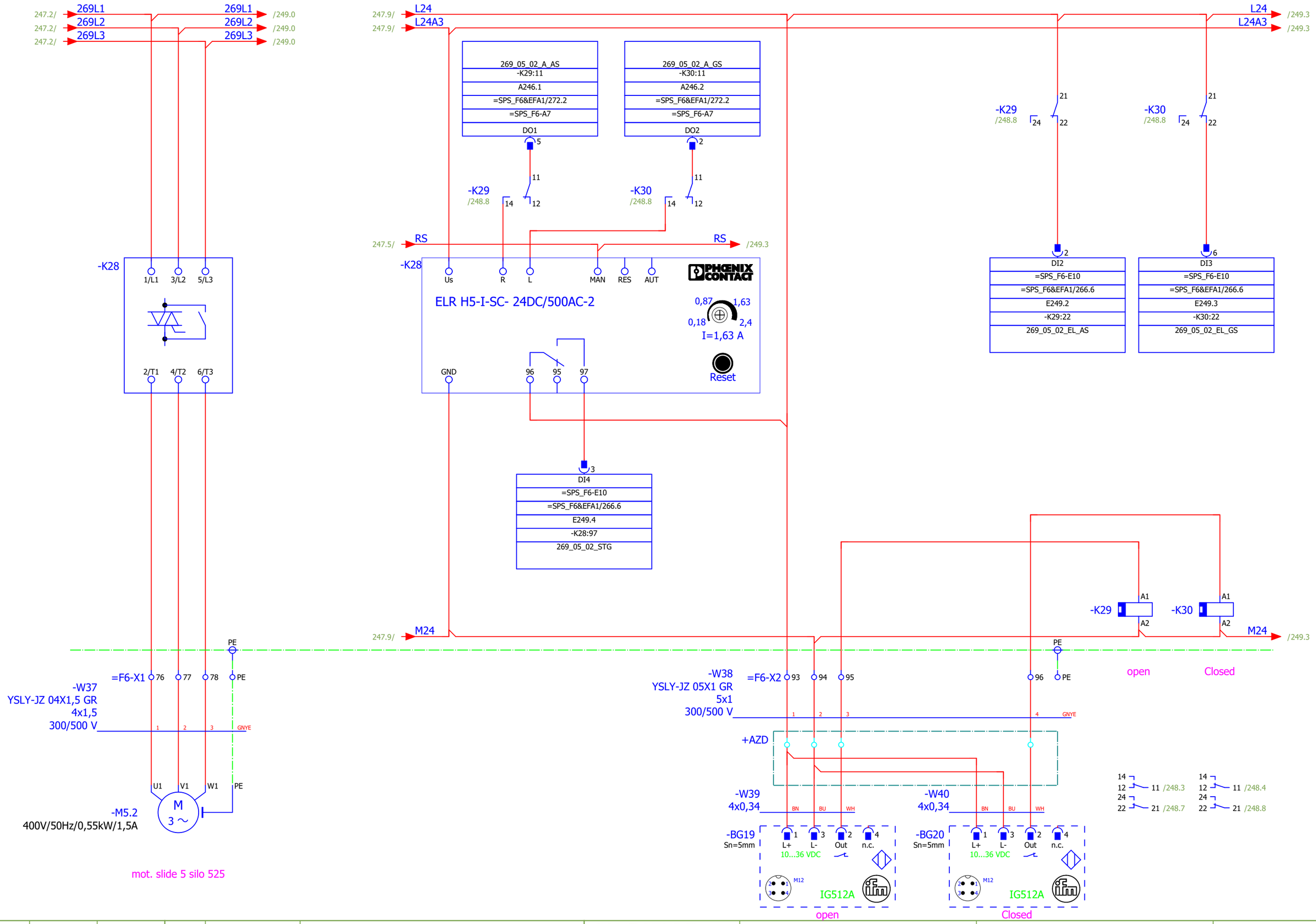

247 249

			Date	12.12.2019	Mixed feed plant Golden Poultry	BEYTEC ... your gateway to success	mot. slide 269.5.2
			Ed.	willen	Field 6		
			Appr				
Modification	Date	Name	Original	V:\EPLAN\Projekte\Company\Beytec\2018\Feed Mill Alssad.elk	Replaced by		

= 269
+ F26
1 : 1
Part II
Page 248
Page 605

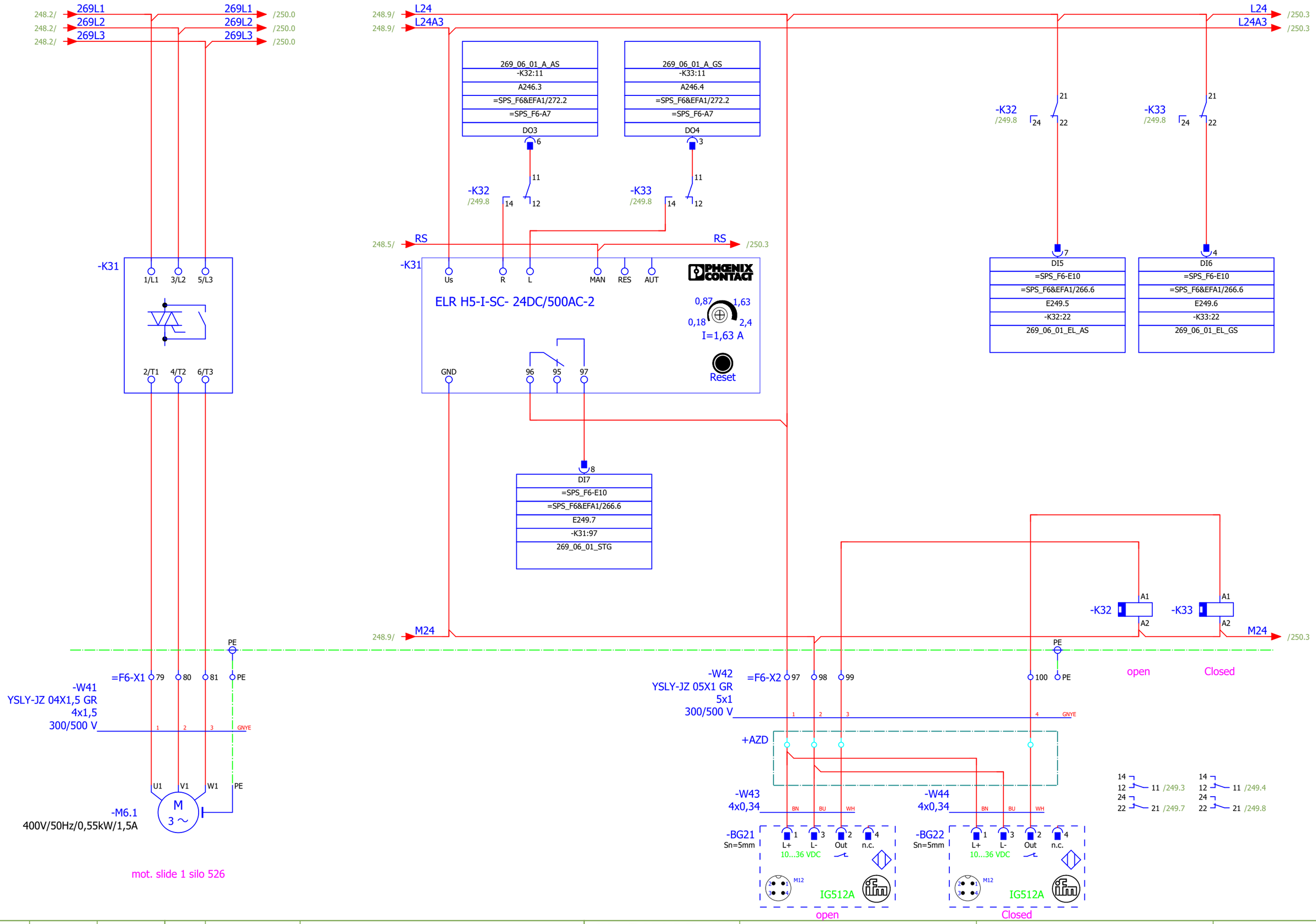

248 250

			Date	12.12.2019	Mixed feed plant Golden Poultry	BEYTEC ... your gateway to success	mot. slide 269.6.1	= 269
			Ed.	willen				+ F26
			Appr		Field 6		1 : 1	Part II
Modification	Date	Name	Original	V:\EPLAN\Projekte\Company\Beytec\2018\Feed Mill Alssad.elk	Replaced by			Page 249
								Page 605

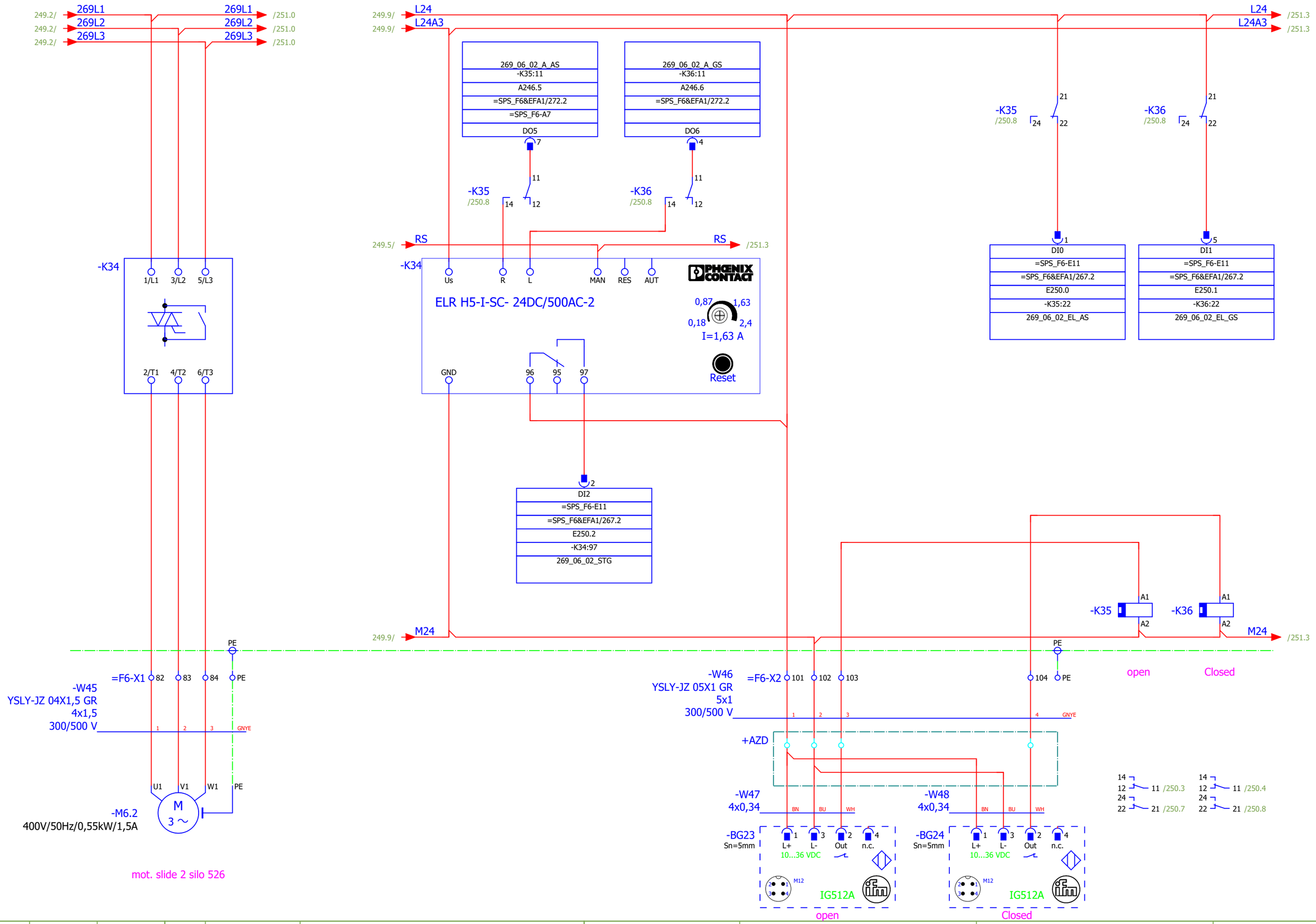

249 251

			Date	12.12.2019	Mixed feed plant Golden Poultry	BEYTEC ... your gateway to success	mot. slide 269.6.2
			Ed.	willen	Field 6		
			Appr				
Modification	Date	Name	Original	V:\EPLAN\Projekte\Company\Replace\Beytec\2018\Feed Mill Alssad.elk	Replaced by		

= 269
+ F26
1 : 1
Part II
Page 250
Page 605

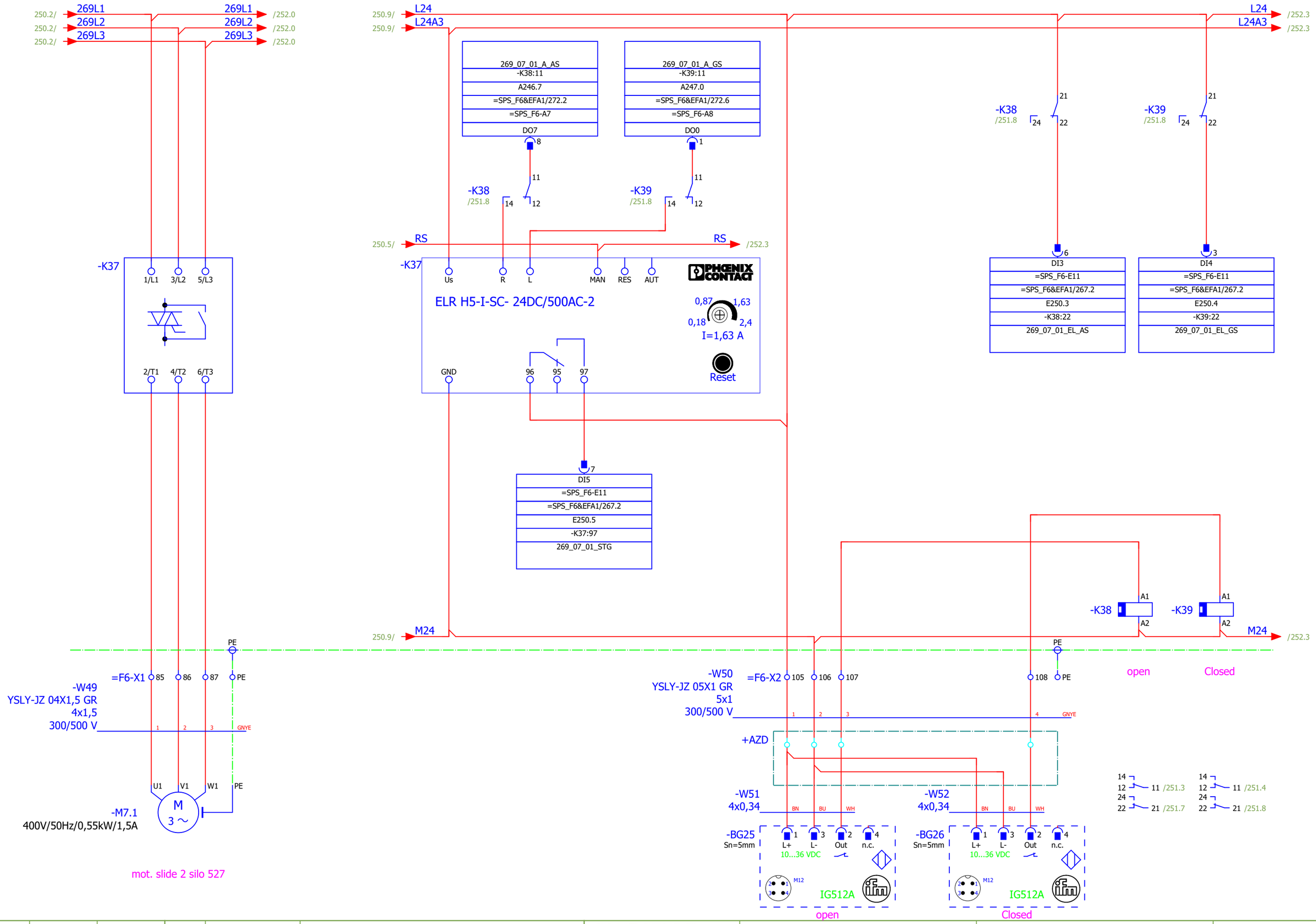

250 252

			Date	12.12.2019	Mixed feed plant Golden Poultry	BEYTEC ... your gateway to success	mot. slide 269.7.1	= 269
			Ed.	willen	Field 6			+ F26
			Appr				1 : 1	Part II
Modification	Date	Name	Original	V:\EPLAN\Projekte\Company\Beytec\2018\Feed Mill Alssad.elk	Replaced by			Page 251
								Page 605

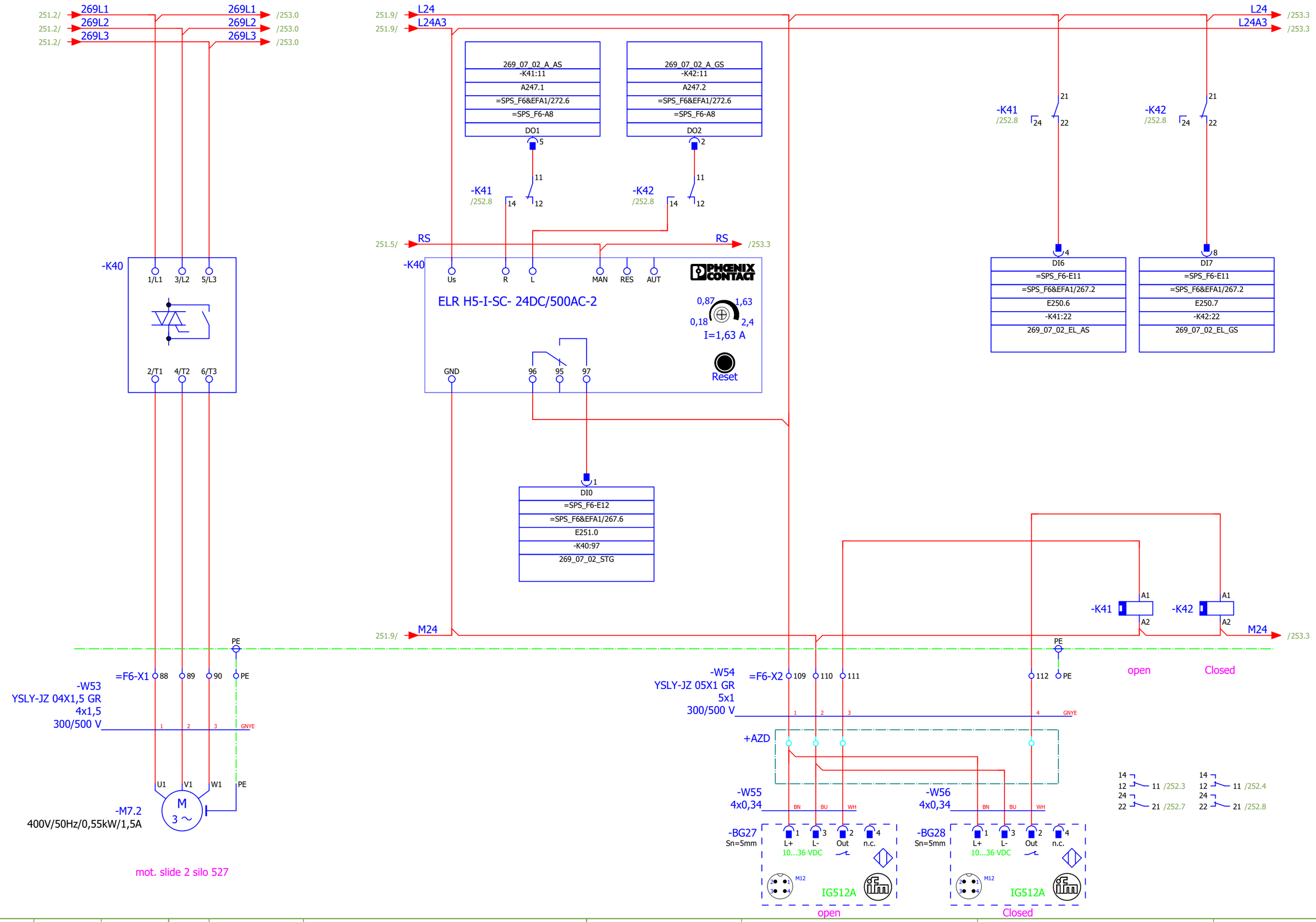

251 253

			Date	12.12.2019	Mixed feed plant Golden Poultry	BEYTEC ... your gateway to success	mot. slide 269.7.2
			Ed.	willen			
			Appr		Field 6		
Modification	Date	Name	Original	V:\EPLAN\Projekte\Company\Replace\Beytec\2018\Feed Mill Alssad.elk	Replaced by		

= 269
+ F26
1 : 1
Part II
Page 252
Page 605

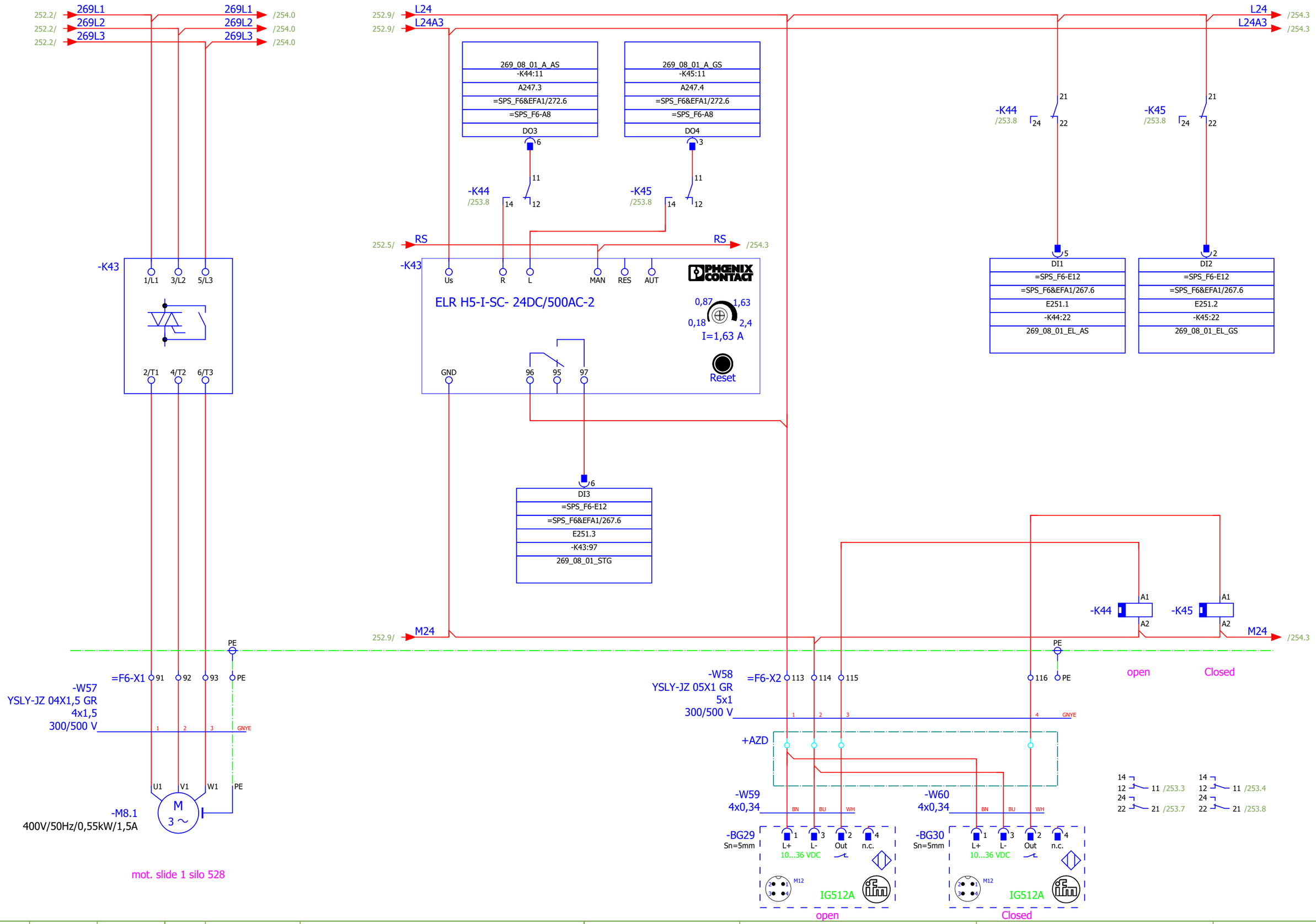

252 254

			Date	12.12.2019	Mixed feed plant Golden Poultry	BEYTEC ... your gateway to success	mot. slide 269.8.1	= 269	
			Ed.	willen				+ F26	
			Appr		Field 6			1 : 1 Part II	Page 253
Modification	Date	Name	Original	V:\EPLAN\Projekte\Company\Replace\Beytec\2018\Feed Mill Alssad.elk	Replaced by				Page 605

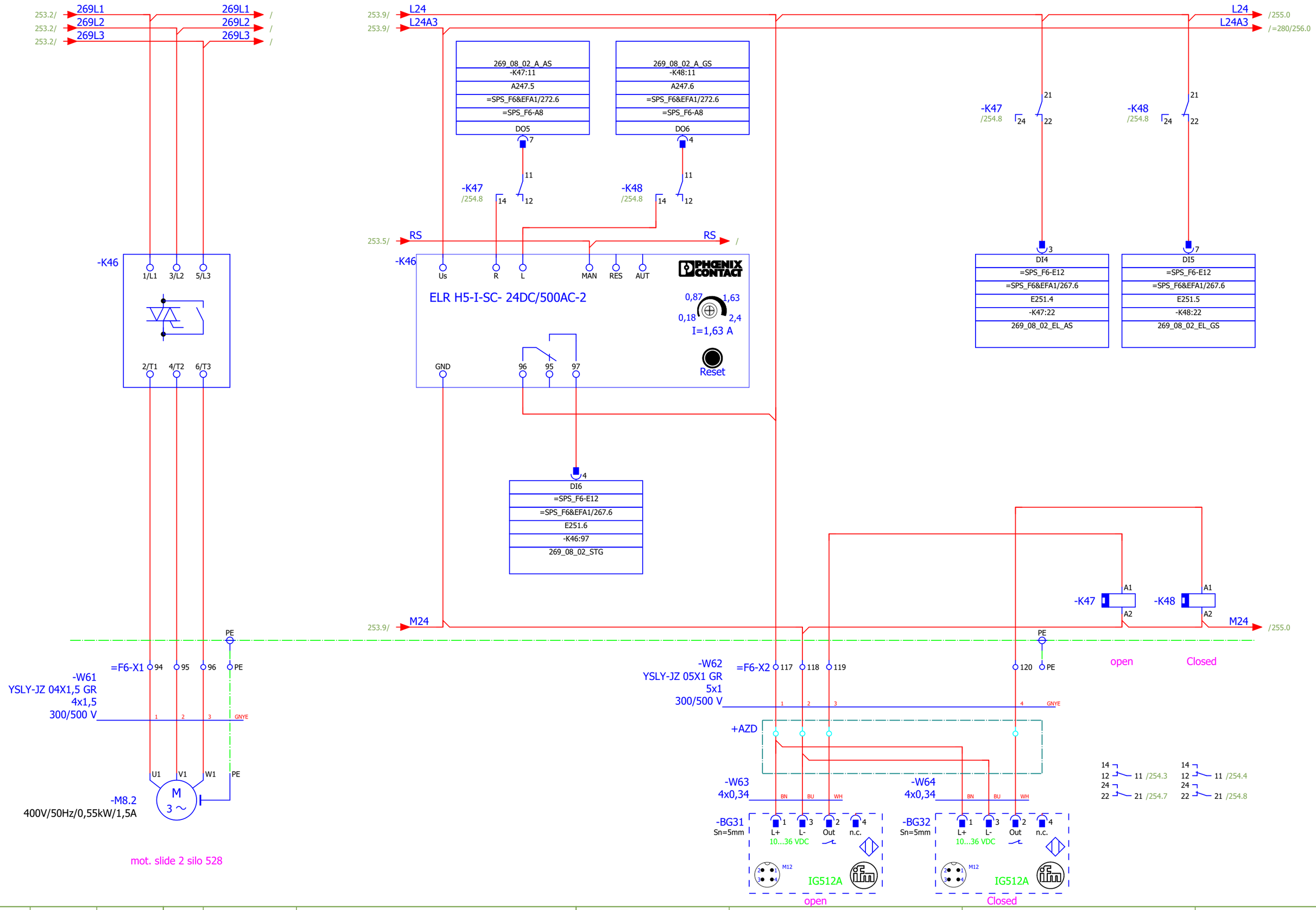

253 255

			Date	12.12.2019	Mixed feed plant Golden Poultry	BEYTEC ... your gateway to success	mot. slide 269.8.2	= 269	
			Ed.	willen				+ F26	
			Appr		Field 6			1 : 1	Part II	Page 254
Modification	Date	Name	Original	V:\EPLAN\Projekte\Company\Replace\Beytec\2018\Feed Mill Alssad.elk	Replaced by					Page 605

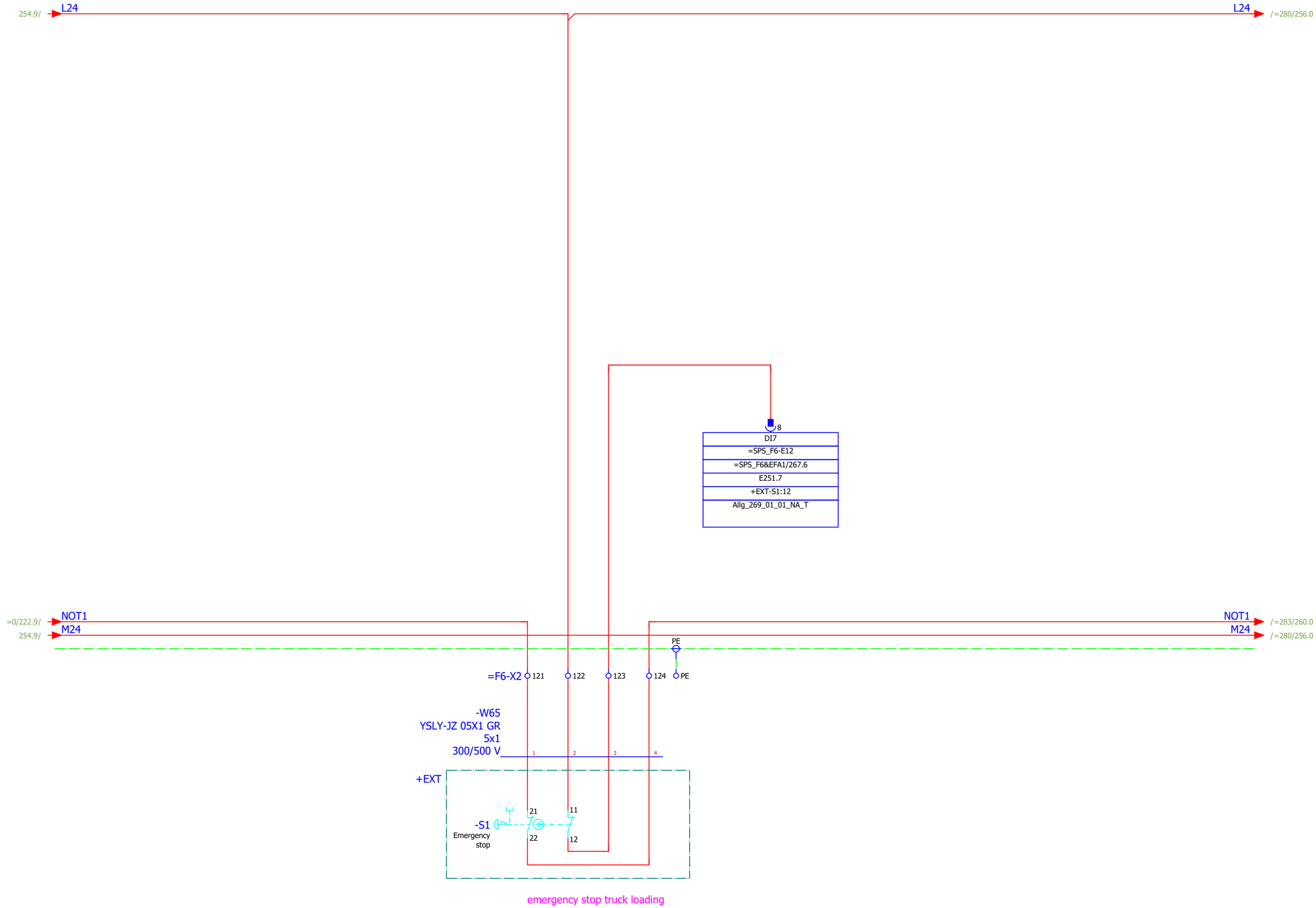

emergency stop truck loading

			Date	12.12.2019	Mixed feed plant Golden Poultry	BEYTEC ... your gateway to success	emergency stop truck loading		= 269
			Ed.	willen					+ F26
			Appr		Field 6			1 : 1	Part II
Modification	Date	Name	Original	V:\EPLAN\Projekte\Company\Alpaca\Beytec\2018\Feed Mill Alssad.elk	Replaced by				Page 255
									Page 605

Replaced by of

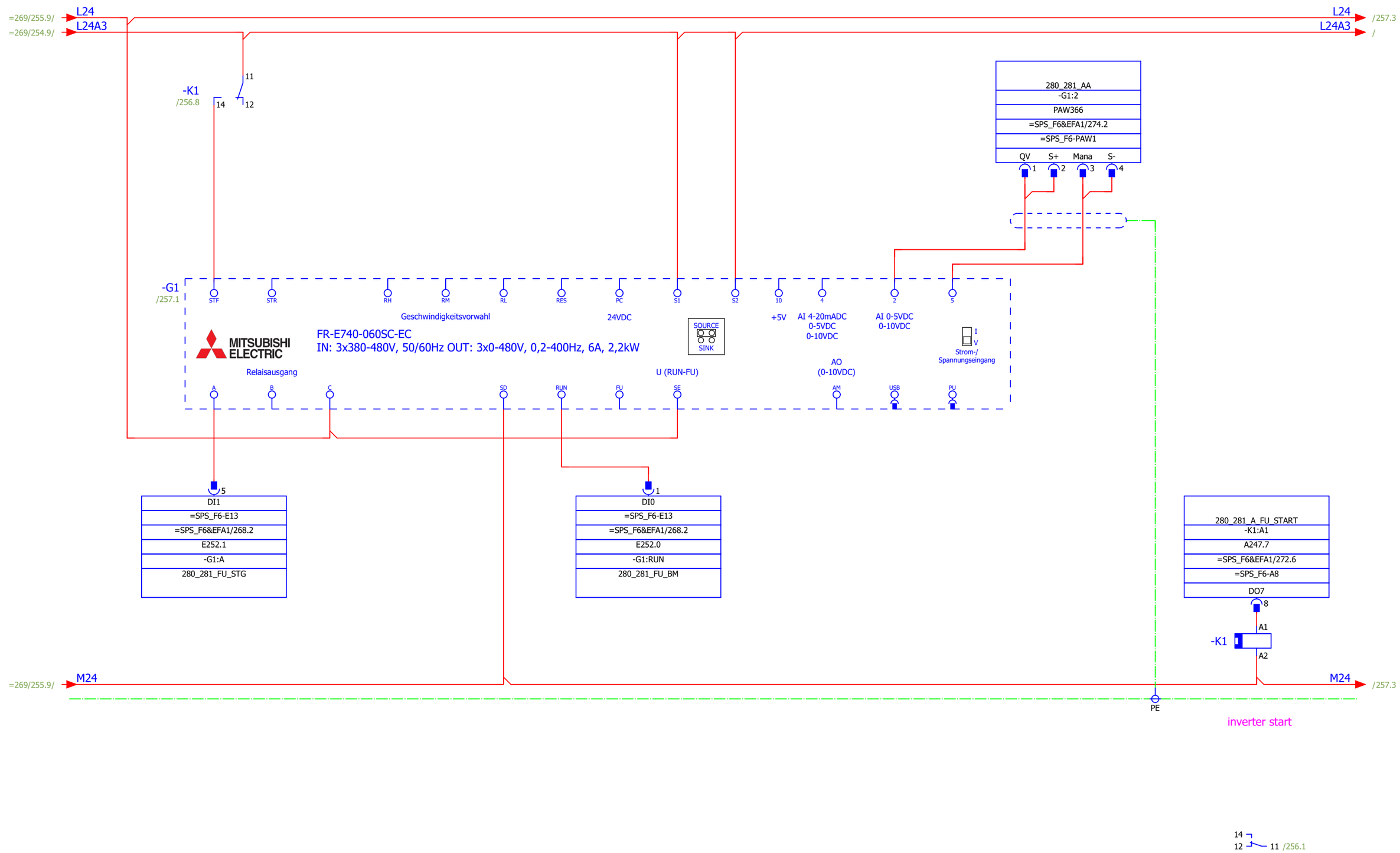

=269+F27/444

257

			Date	12.12.2019	Mixed feed plant Golden Poultry	BEYTEC ... your gateway to success	Ansteuerung Trogförderkette	= 280
			Ed.	willen				+ F26
			Appr		Field 6		1 : 1	Part II
Modification	Date	Name	Original	V:\EPLAN\Projekte\Company\Beytec\2018\Feed Mill Alssad.elk	Replaced by			Page 256
								Page 605

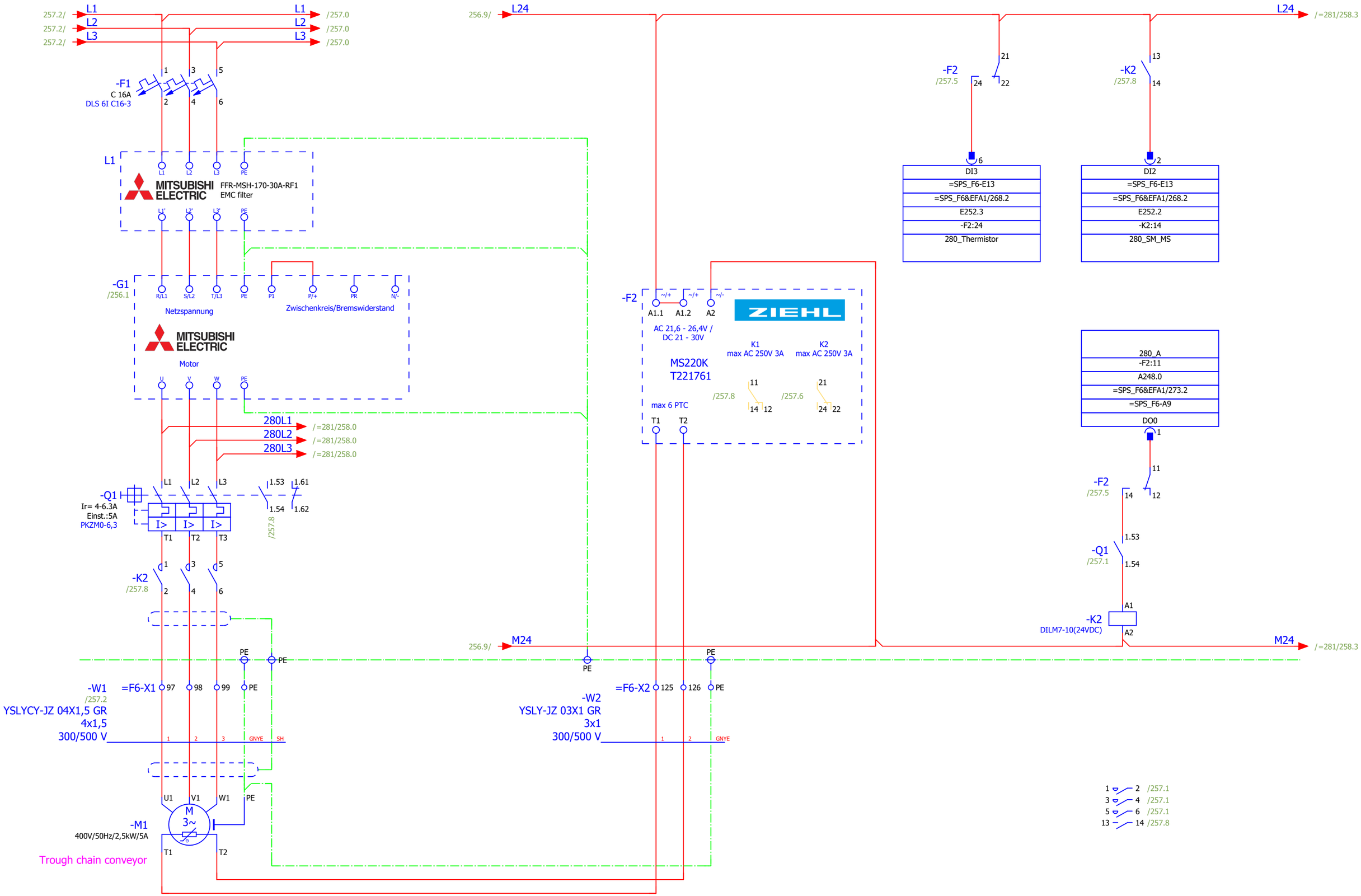

			Date	12.12.2019	Mixed feed plant Golden Poultry	BEYTEC ... your gateway to success	activation trough chain conveyor	= 280	
			Ed.	willen				+ F26	
			Appr		Field 6		1 : 1	Part II	Page 257
Modification	Date	Name	Original	V:\EPLAN\Projekte\Company\Replace\Beytec\2018\Feed Mill Alssad.elk	Replaced by				Page 605

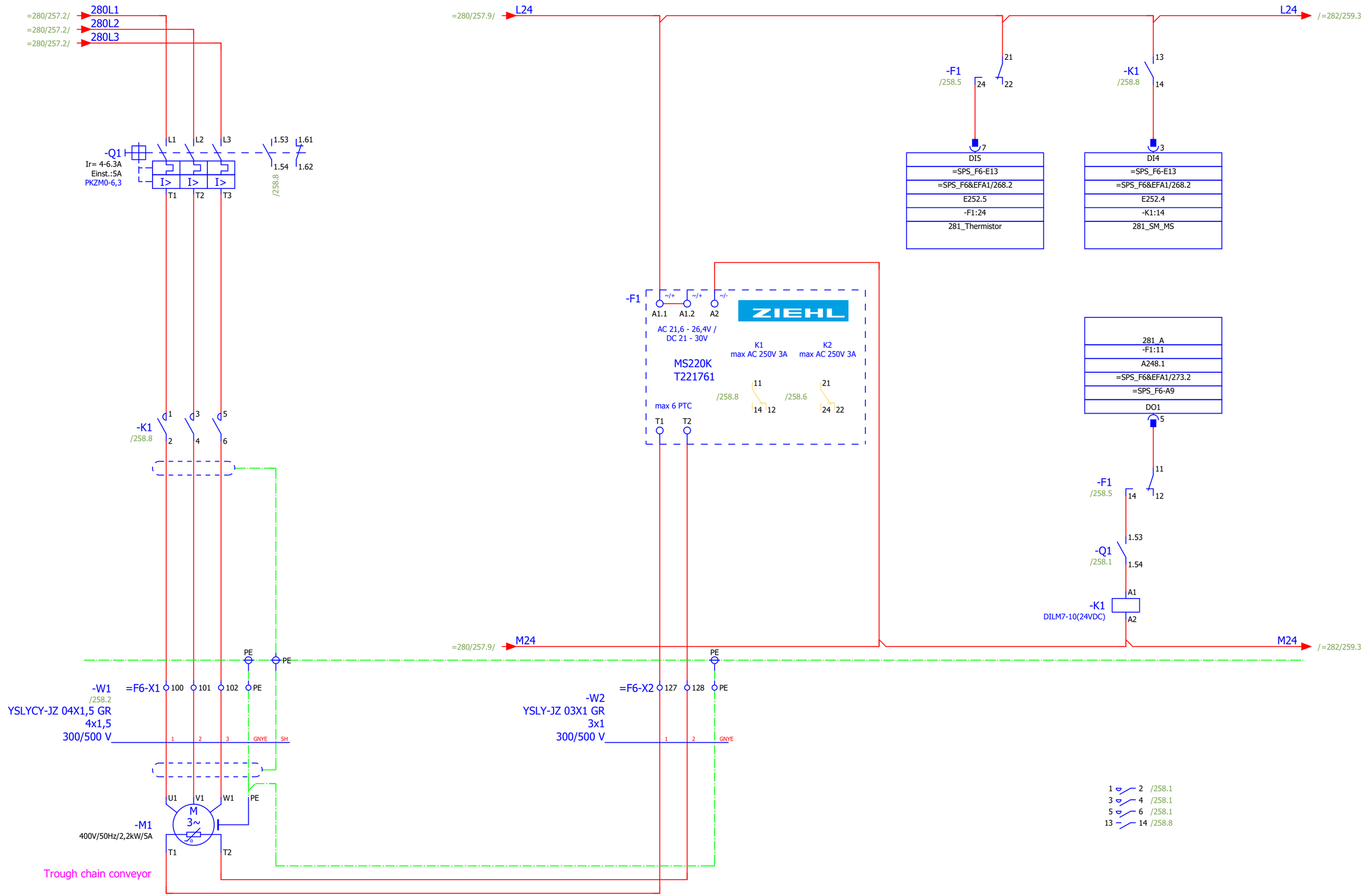

=280+F27/445

+F27/446

			Date	12.12.2019	Mixed feed plant Golden Poultry	BEYTEC ... your gateway to success	activation trough chain conveyor	= 281	
			Ed.	willen				+ F26	
			Appr		Field 6		1 : 1	Part II	Page 258
Modification	Date	Name	Original	V:\EPLAN\Projekte\Company\Replace\Beytec\2018\Feed Mill Alssad.elk	Replaced by				Page 605

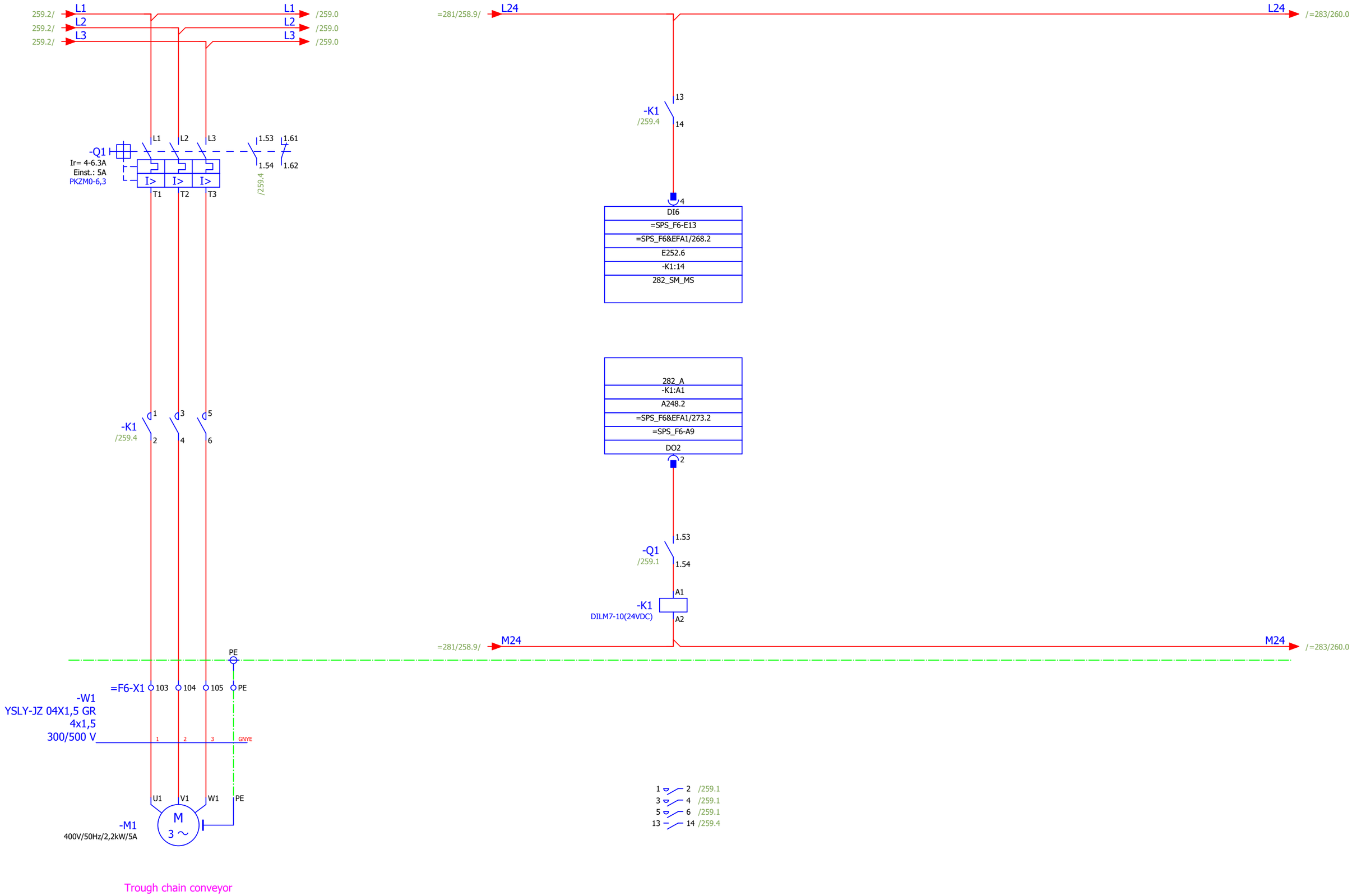

Trough chain conveyor

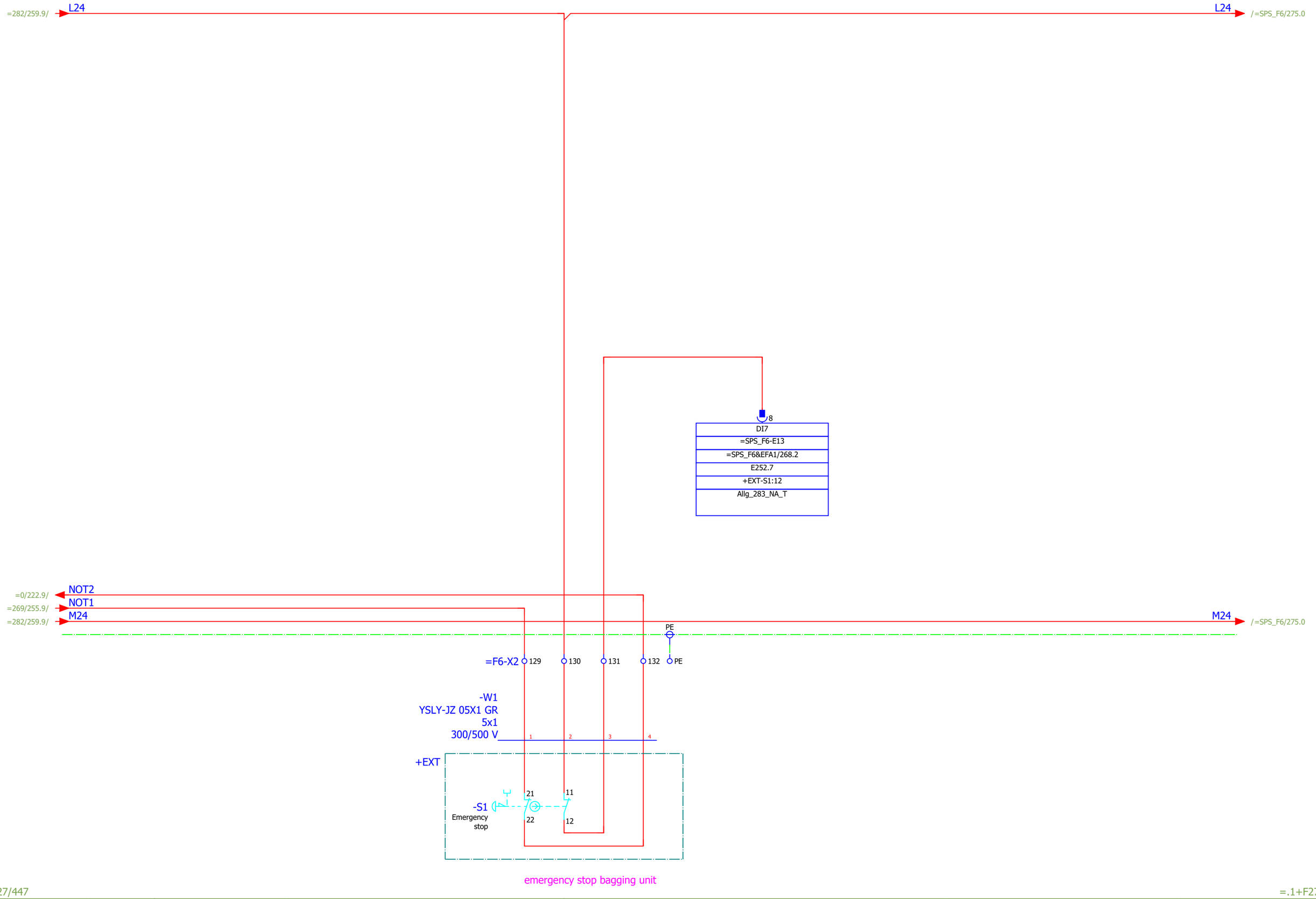

=282+F27/447

=.1+F27/448

			Date	12.12.2019	Mixed feed plant Golden Poultry	BEYTEC ... your gateway to success	emergency stop bagging unit	= 283	
			Ed.	willen				+ F26	
			Appr		Field 6			1 : 1 / Part II	Page 260
Modification	Date	Name	Original	V:\EPLAN\Projekte\Company\Alsad\Beytec\2018\Feed Mill Alssad.elk	Replaced by				Page 605

-K1
&ETC/277.1

ET200S SIEMENS
IM 151-1 STANDARD

-X1: DP &EFS/275.6

-X20:1 1L+ &EFS/275.3
-X20:2 2L+ &EFS/275.4
-X20:3 1M &EFS/275.5
-X20:4 2M &EFS/275.6

6ES7151-1AA06-0AB0

-K2
&ETC/277.1

ET200S SIEMENS
PM-E DC 24V

2 DC24V &EFS/276.1
3 M &EFS/276.1
A4 AUX1 &EFS/276.4

6 DC24V &EFS/276.2
7 M &EFS/276.2
A8 AUX1 &EFS/276.4

6ES7138-4CA01-0AA0
+ TM-P15C23-A0

-K3
&ETC/277.5

ET200S SIEMENS
PM-E DC 24V

2 DC24V &EFS/276.5
3 M &EFS/276.6
A4 AUX1 &EFS/276.8

6 DC24V &EFS/276.6
7 M &EFS/276.7
A8 AUX1 &EFS/276.8

6ES7138-4CA01-0AA0
+ TM-P15C23-A0

			Date	12.12.2019	Mixed feed plant Golden Poultry	BEYTEC ... your gateway to success	overview bus coupler and power module
			Ed.	willen	Field 6		
			Appr				
Modification	Date	Name	Original	V:\EPLAN\Projekte\Company\Beytec\2018\Feed Mill Alssad.elk	Replaced by		

= SPS_F6
+ F26
1 : 1 | Part II | Page 261 | Page 605

-E1
&ETC/277.2

ET200S SIEMENS
8 DI DC 24 V

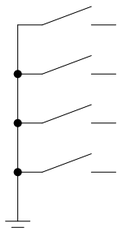

E240.0	1 DI0	=265.1&EFS/22-326 5.1-Q1:1.54	Allg_VS_265
E240.2	2 DI2	=265.1&EFS/22-326 5.1-K3:22	265_01_01_EL_GS
E240.4	3 DI4	=265.1&EFS/22-426 5.1-K5:22	265_01_02_EL_AS
E240.6	4 DI6	=265.1&EFS/22-426 5.1-K4:97	265_01_02_STG

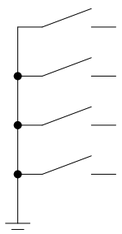

E240.1	5 DI1	=265.1&EFS/22-326 5.1-K2:22	265_01_01_EL_AS
E240.3	6 DI3	=265.1&EFS/22-326 5.1-K1:97	265_01_01_STG
E240.5	7 DI5	=265.1&EFS/22-426 5.1-K6:22	265_01_02_EL_GS
E240.7	8 DI7	=265.1&EFS/22-526 5.1-K8:22	265_01_03_EL_AS

6ES7131-4BF00-0AA0
+ TM-E15C24-01

-E2
&ETC/277.2

ET200S SIEMENS
8 DI DC 24 V

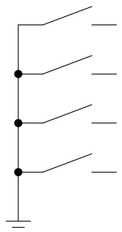

E241.0	1 DI0	=265.1&EFS/22-526 5.1-K9:22	265_01_03_EL_GS
E241.2	2 DI2	=365.1&EFS/22-636 5.1-K2:22	365_01_01_EL_AS
E241.4	3 DI4	=365.1&EFS/22-636 5.1-K1:97	365_01_01_STG
E241.6	4 DI6	=365.1&EFS/22-736 5.1-K6:22	365_01_02_EL_GS

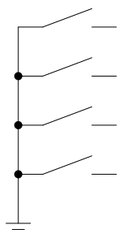

E241.1	5 DI1	=265.1&EFS/22-526 5.1-K7:97	265_01_03_STG
E241.3	6 DI3	=365.1&EFS/22-636 5.1-K3:22	365_01_01_EL_GS
E241.5	7 DI5	=365.1&EFS/22-736 5.1-K5:22	365_01_02_EL_AS
E241.7	8 DI7	=365.1&EFS/22-736 5.1-K4:97	365_01_02_STG

6ES7131-4BF00-0AA0
+ TM-E15C24-01

-E3
&ETC/277.2

ET200S SIEMENS
8 DI DC 24 V

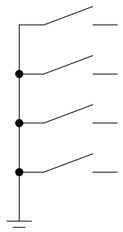

E242.0	1 DI0	=365.18&EFS/22836 5.1-K8:22	365_01_03_EL_AS
E242.2	2 DI2	=365.18&EFS/22836 5.1-K7:97	365_01_03_STG
E242.4	3 DI4	=266.18&EFS/23426 6.1-K2:22	266_01_01_EL_AS
E242.6	4 DI6	=266.18&EFS/23426 6.1-K1:97	266_01_01_STG

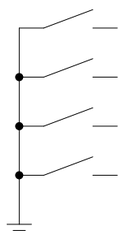

E242.1	5 DI1	=365.18&EFS/22836 5.1-K9:22	365_01_03_EL_GS
E242.3	6 DI3	=266&EFS/229=5 266-K1:14	266_SM_MS
E242.5	7 DI5	=266.18&EFS/23426 6.1-K3:22	266_01_01_EL_GS
E242.7	8 DI7	=266.18&EFS/23426 6.1-K5:22	266_01_02_EL_AS

6ES7131-4BF00-0AA0
+ TM-E15C24-01

-E4
&ETC/277.2

ET200S SIEMENS
8 DI DC 24 V

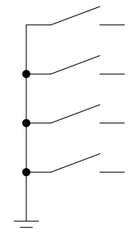

E243.0	1 DI0	=266.18&EFS/23426 6.1-K6:22	266_01_02_EL_GS
E243.2	2 DI2	=266.18&EFS/23426 6.1-K8:24	266_01_03_EL_AS
E243.4	3 DI4	=266.18&EFS/23426 6.1-K7:97	266_01_03_STG
E243.6	4 DI6	=266.18&EFS/23426 6.1-K12:22	266_01_04_EL_GS

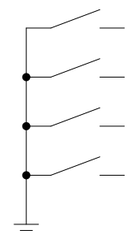

E243.1	5 DI1	=266.18&EFS/23426 6.1-K4:97	266_01_02_STG
E243.3	6 DI3	=266.18&EFS/23426 6.1-K9:22	266_01_03_EL_GS
E243.5	7 DI5	=266.18&EFS/23426 6.1-K11:22	266_01_04_EL_AS
E243.7	8 DI7	=266.18&EFS/23426 6.1-K10:97	266_01_04_STG

6ES7131-4BF00-0AA0
+ TM-E15C24-01

-E5
&ETC/277.2

ET200S SIEMENS
8 DI DC 24 V

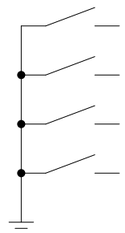

E244.0	1 DI0	=267&EFS/234=267-K1:14	267_SM_MS
E244.2	2 DI2	=267.1&EFS/235=267.1-K2:22	267_01_01_EL_AS
E244.4	3 DI4	=267.1&EFS/235=267.1-K1:97	267_01_01_STG
E244.6	4 DI6	=267.1&EFS/236=267.1-K6:22	267_01_02_EL_GS

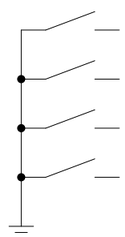

E244.1	5 DI1	=267.1&EFS/235=267.1-Q1:1.54	Allg_VS_267
E244.3	6 DI3	=267.1&EFS/235=267.1-K3:22	267_01_01_EL_GS
E244.5	7 DI5	=267.1&EFS/236=267.1-K5:22	267_01_02_EL_AS
E244.7	8 DI7	=267.1&EFS/236=267.1-K4:97	267_01_02_STG

6ES7131-4BF00-0AA0
+ TM-E15C24-01

-E6
&ETC/277.3

ET200S SIEMENS
8 DI DC 24 V

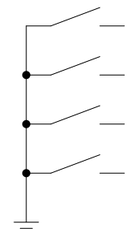

E245.0	1 DI0	=267.1&EFS/237=267.1-K8:22	267_01_03_EL_AS
E245.2	2 DI2	=267.1&EFS/237=267.1-K7:97	267_01_03_STG
E245.4	3 DI4	=267.1&EFS/238=267.1-K12:22	267_01_04_EL_GS
E245.6	4 DI6	=269&EFS/239=269-K2:22	269_01_01_EL_AS

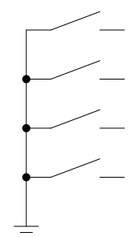

E245.1	5 DI1	=267.1&EFS/237=267.1-K9:22	267_01_03_EL_GS
E245.3	6 DI3	=267.1&EFS/238=267.1-K11:22	267_01_04_EL_AS
E245.5	7 DI5	=267.1&EFS/238=267.1-K10:97	267_01_04_STG
E245.7	8 DI7	=269&EFS/239=269-K3:22	269_01_01_EL_GS

6ES7131-4BF00-0AA0
+ TM-E15C24-01

-E7
&ETC/277.3

ET200S SIEMENS
8 DI DC 24 V

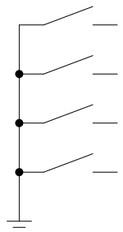

E246.0	1 DI0	=269&EFS/239+4269-K1:97	269_01_01_STG
E246.2	2 DI2	=269&EFS/240+8269-K6:22	269_01_02_EL_GS
E246.4	3 DI4	=269&EFS/241+7269-K8:22	269_02_01_EL_AS
E246.6	4 DI6	=269&EFS/241+4269-K7:97	269_02_01_STG

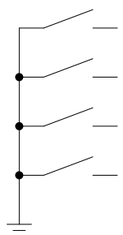

E246.1	5 DI1	=269&EFS/240+7269-K5:22	269_01_02_EL_AS
E246.3	6 DI3	=269&EFS/240+4269-K4:97	269_01_02_STG
E246.5	7 DI5	=269&EFS/241+8269-K9:22	269_02_01_EL_GS
E246.7	8 DI7	=269&EFS/242+7269-K11:22	269_02_02_EL_AS

6ES7131-4BF00-0AA0
+ TM-E15C24-01

-E8
&ETC/277.3

ET200S SIEMENS
8 DI DC 24 V

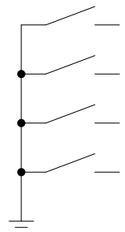

E247.0	1 DI0	=269&EFS/242+8269-K12:22	269_02_02_EL_GS
E247.2	2 DI2	=269&EFS/243+7269-K14:22	269_03_01_EL_AS
E247.4	3 DI4	=269&EFS/243+4269-K13:97	269_03_01_STG
E247.6	4 DI6	=269&EFS/244+8269-K18:22	269_03_02_EL_GS

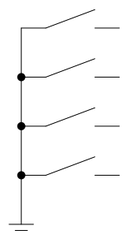

E247.1	5 DI1	=269&EFS/242+4269-K10:97	269_02_02_STG
E247.3	6 DI3	=269&EFS/243+8269-K15:22	269_03_01_EL_GS
E247.5	7 DI5	=269&EFS/244+7269-K17:22	269_03_02_EL_AS
E247.7	8 DI7	=269&EFS/244+4269-K16:97	269_03_02_STG

6ES7131-4BF00-0AA0
+ TM-E15C24-01

-E9
&ETC/277.3

ET200S SIEMENS
8 DI DC 24 V

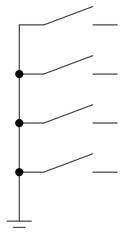

E248.0	1 DI0	=269&EFS/245+6269-Q1:1.54	Allg_VS_269
E248.2	2 DI2	=269&EFS/245+8269-K21:22	269_04_01_EL_GS
E248.4	3 DI4	=269&EFS/246+7269-K23:22	269_04_02_EL_AS
E248.6	4 DI6	=269&EFS/246+4269-K22:97	269_04_02_STG

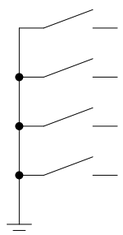

E248.1	5 DI1	=269&EFS/245+7269-K20:22	269_04_01_EL_AS
E248.3	6 DI3	=269&EFS/245+4269-K19:97	269_04_01_STG
E248.5	7 DI5	=269&EFS/246+8269-K24:22	269_04_02_EL_GS
E248.7	8 DI7	=269&EFS/247+7269-K26:22	269_05_01_EL_AS

6ES7131-4BF00-0AA0
+ TM-E15C24-01

-E10
&ETC/277.4

ET200S SIEMENS
8 DI DC 24 V

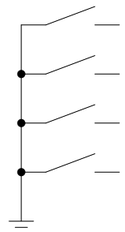

E249.0	1 DI0	=269&EFS/247+8269-K27:22	269_05_01_EL_GS
E249.2	2 DI2	=269&EFS/248+7269-K29:22	269_05_02_EL_AS
E249.4	3 DI4	=269&EFS/248+4269-K28:97	269_05_02_STG
E249.6	4 DI6	=269&EFS/249+8269-K33:22	269_06_01_EL_GS

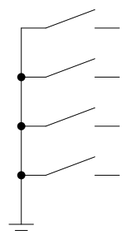

E249.1	5 DI1	=269&EFS/247+4269-K25:97	269_05_01_STG
E249.3	6 DI3	=269&EFS/248+8269-K30:22	269_05_02_EL_GS
E249.5	7 DI5	=269&EFS/249+7269-K32:22	269_06_01_EL_AS
E249.7	8 DI7	=269&EFS/249+4269-K31:97	269_06_01_STG

6ES7131-4BF00-0AA0
+ TM-E15C24-01

-E11
&ETC/277.4

ET200S SIEMENS
8 DI DC 24 V

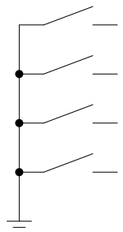

E250.0	1 DI0	=269&EFS/250=7269-K35:22	269_06_02_EL_AS
E250.2	2 DI2	=269&EFS/250=4269-K34:97	269_06_02_STG
E250.4	3 DI4	=269&EFS/251=8269-K39:22	269_07_01_EL_GS
E250.6	4 DI6	=269&EFS/252=7269-K41:22	269_07_02_EL_AS

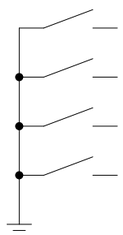

E250.1	5 DI1	=269&EFS/250=8269-K36:22	269_06_02_EL_GS
E250.3	6 DI3	=269&EFS/251=7269-K38:22	269_07_01_EL_AS
E250.5	7 DI5	=269&EFS/251=4269-K37:97	269_07_01_STG
E250.7	8 DI7	=269&EFS/252=8269-K42:22	269_07_02_EL_GS

6ES7131-4BF00-0AA0
+ TM-E15C24-01

-E12
&ETC/277.4

ET200S SIEMENS
8 DI DC 24 V

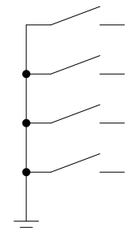

E251.0	1 DI0	=269&EFS/252=4269-K40:97	269_07_02_STG
E251.2	2 DI2	=269&EFS/253=8269-K45:22	269_08_01_EL_GS
E251.4	3 DI4	=269&EFS/254=7269-K47:22	269_08_02_EL_AS
E251.6	4 DI6	=269&EFS/254=4269-K46:97	269_08_02_STG

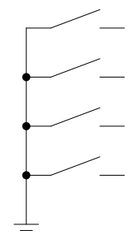

E251.1	5 DI1	=269&EFS/253=7269-K44:22	269_08_01_EL_AS
E251.3	6 DI3	=269&EFS/253=4269-K43:97	269_08_01_STG
E251.5	7 DI5	=269&EFS/254=8269-K48:22	269_08_02_EL_GS
E251.7	8 DI7	=269&EFS/255=5269+EXT-S1:12	Allg_269_01_01_NA_T

6ES7131-4BF00-0AA0
+ TM-E15C24-01

-E13
&ETC/277.4

ET200S SIEMENS
8 DI DC 24 V

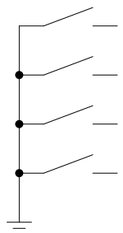

E252.0	1 DI0	=280&EFS/256+4280-G1:RUN	280_281_FU_BM
E252.2	2 DI2	=280&EFS/257+6280-K2:14	280_SM_MS
E252.4	3 DI4	=281&EFS/258+6281-K1:14	281_SM_MS
E252.6	4 DI6	=282&EFS/259+4282-K1:14	282_SM_MS

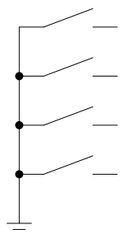

E252.1	5 DI1	=280&EFS/256+1280-G1:A	280_281_FU_STG
E252.3	6 DI3	=280&EFS/257+6280-F2:24	280_Thermistor
E252.5	7 DI5	=281&EFS/258+6281-F1:24	281_Thermistor
E252.7	8 DI7	=283&EFS/260+5283+EXT-S1:12	Allg_283_NA_T

6ES7131-4BF00-0AA0
+ TM-E15C24-01

-A1
&ETC/277.5

ET200S SIEMENS
8 DO DC24V 0,5A

A240.0 1/QX.0/DO0	1 DO0	=265.18&EFS/22=265.1-K1:MAN	Allg_Reset_F26
A240.2 2/QX.2/DO2	2 DO2	=265.18&EFS/22=265.1-K3:11	265_01_01_A_GS
A240.4 3/QX.4/DO4	3 DO4	=265.18&EFS/22=265.1-K6:11	265_01_02_A_GS
A240.6 4/QX.6/DO6	4 DO6	=265.18&EFS/22=265.1-K9:11	265_01_03_A_GS
A240.1 5/QX.1/DO1	5 DO1	=265.18&EFS/22=265.1-K2:11	265_01_01_A_AS
A240.3 6/QX.3/DO3	6 DO3	=265.18&EFS/22=265.1-K5:11	265_01_02_A_AS
A240.5 7/QX.5/DO5	7 DO5	=265.18&EFS/22=265.1-K8:11	265_01_03_A_AS
A240.7 8/QX.7/DO7	8 DO7	=365.18&EFS/22=365.1-K2:11	365_01_01_A_AS

6ES7132-4BF00-0AA0
+ TM-E15C24-01

-A2
&ETC/277.5

ET200S SIEMENS
8 DO DC24V 0,5A

A241.0 1/QX.0/DO0	1 DO0	=365.18&EFS/22=365.1-K3:11	365_01_01_A_GS
A241.2 2/QX.2/DO2	2 DO2	=365.18&EFS/22=365.1-K6:11	365_01_02_A_GS
A241.4 3/QX.4/DO4	3 DO4	=365.18&EFS/22=365.1-K9:11	365_01_03_A_GS
A241.6 4/QX.6/DO6	4 DO6	=266.18&EFS/23=266.1-K2:11	266_01_01_A_AS
A241.1 5/QX.1/DO1	5 DO1	=365.18&EFS/22=365.1-K5:11	365_01_02_A_AS
A241.3 6/QX.3/DO3	6 DO3	=365.18&EFS/22=365.1-K8:11	365_01_03_A_AS
A241.5 7/QX.5/DO5	7 DO5	=266&EFS/229=266-K1:A1	266_A
A241.7 8/QX.7/DO7	8 DO7	=266.18&EFS/23=266.1-K3:11	266_01_01_A_GS

6ES7132-4BF00-0AA0
+ TM-E15C24-01

-A3
&ETC/277.5

ET200S SIEMENS
8 DO DC24V 0,5A

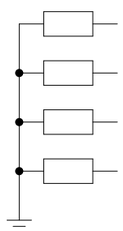

A242.0 1/QX.0/DO0	1 DO0	=266.18&EFS/234=266.1-K5:11	266_01_02_A_AS
A242.2 2/QX.2/DO2	2 DO2	=266.18&EFS/234=266.1-K8:11	266_01_03_A_AS
A242.4 3/QX.4/DO4	3 DO4	=266.18&EFS/234=266.1-K11:11	266_01_04_A_AS
A242.6 4/QX.6/DO6	4 DO6	=267&EFS/234=5267-K1:A1	267_A

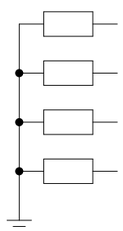

A242.1 5/QX.1/DO1	5 DO1	=266.18&EFS/234=266.1-K6:11	266_01_02_A_GS
A242.3 6/QX.3/DO3	6 DO3	=266.18&EFS/234=266.1-K9:11	266_01_03_A_GS
A242.5 7/QX.5/DO5	7 DO5	=266.18&EFS/234=266.1-K12:11	266_01_04_A_GS
A242.7 8/QX.7/DO7	8 DO7	=267.18&EFS/234=267.1-K2:11	267_01_01_A_AS

6ES7132-4BF00-0AA0
+ TM-E15C24-01

-A4
&ETC/277.6

ET200S SIEMENS
8 DO DC24V 0,5A

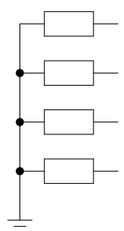

A243.0 1/QX.0/DO0	1 DO0	=267.18&EFS/234=267.1-K3:11	267_01_01_A_GS
A243.2 2/QX.2/DO2	2 DO2	=267.18&EFS/234=267.1-K6:11	267_01_02_A_GS
A243.4 3/QX.4/DO4	3 DO4	=267.18&EFS/234=267.1-K9:11	267_01_03_A_GS
A243.6 4/QX.6/DO6	4 DO6	=267.18&EFS/234=267.1-K12:11	267_01_04_A_GS

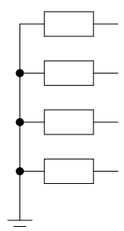

A243.1 5/QX.1/DO1	5 DO1	=267.18&EFS/234=267.1-K5:11	267_01_02_A_AS
A243.3 6/QX.3/DO3	6 DO3	=267.18&EFS/234=267.1-K8:11	267_01_03_A_AS
A243.5 7/QX.5/DO5	7 DO5	=267.18&EFS/234=267.1-K11:11	267_01_04_A_AS
A243.7 8/QX.7/DO7	8 DO7	=269&EFS/239=4269-K2:11	269_01_01_A_AS

6ES7132-4BF00-0AA0
+ TM-E15C24-01

-A5
&ETC/277.6

ET200S SIEMENS
8 DO DC24V 0,5A

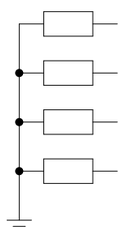

A244.0 1/QX.0/DO0	1 DO0	=269&EFS/239+5269-K3:11	269_01_01_A_GS
A244.2 2/QX.2/DO2	2 DO2	=269&EFS/240+5269-K6:11	269_01_02_A_GS
A244.4 3/QX.4/DO4	3 DO4	=269&EFS/241+5269-K9:11	269_02_01_A_GS
A244.6 4/QX.6/DO6	4 DO6	=269&EFS/242+5269-K12:11	269_02_02_A_GS

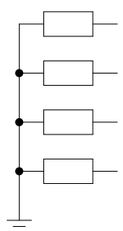

A244.1 5/QX.1/DO1	5 DO1	=269&EFS/240+4269-K5:11	269_01_02_A_AS
A244.3 6/QX.3/DO3	6 DO3	=269&EFS/241+4269-K8:11	269_02_01_A_AS
A244.5 7/QX.5/DO5	7 DO5	=269&EFS/242+4269-K11:11	269_02_02_A_AS
A244.7 8/QX.7/DO7	8 DO7	=269&EFS/243+4269-K14:11	269_03_01_A_AS

6ES7132-4BF00-0AA0
+ TM-E15C24-01

-A6
&ETC/277.6

ET200S SIEMENS
8 DO DC24V 0,5A

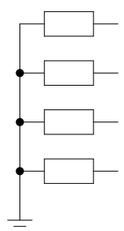

A245.0 1/QX.0/DO0	1 DO0	=269&EFS/243+5269-K15:11	269_03_01_A_GS
A245.2 2/QX.2/DO2	2 DO2	=269&EFS/244+5269-K18:11	269_03_02_A_GS
A245.4 3/QX.4/DO4	3 DO4	=269&EFS/245+5269-K21:11	269_04_01_A_GS
A245.6 4/QX.6/DO6	4 DO6	=269&EFS/246+5269-K24:11	269_04_02_A_GS

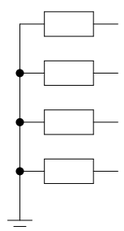

A245.1 5/QX.1/DO1	5 DO1	=269&EFS/244+4269-K17:11	269_03_02_A_AS
A245.3 6/QX.3/DO3	6 DO3	=269&EFS/245+4269-K20:11	269_04_01_A_AS
A245.5 7/QX.5/DO5	7 DO5	=269&EFS/246+4269-K23:11	269_04_02_A_AS
A245.7 8/QX.7/DO7	8 DO7	=269&EFS/247+4269-K26:11	269_05_01_A_AS

6ES7132-4BF00-0AA0
+ TM-E15C24-01

-A7
&ETC/277.6

ET200S SIEMENS
8 DO DC24V 0,5A

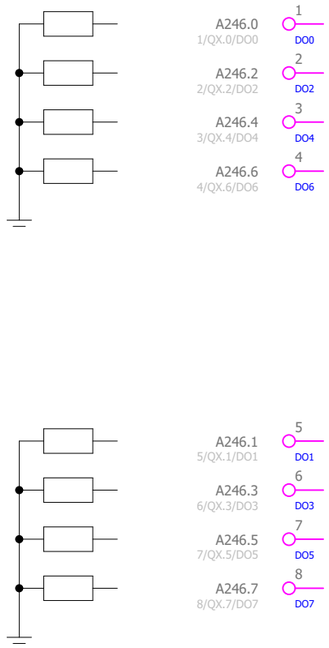

A246.0 1/QX.0/DO0	1 DO0	=269&EFS/247+5269-K27:11	269_05_01_A_GS
A246.2 2/QX.2/DO2	2 DO2	=269&EFS/248+5269-K30:11	269_05_02_A_GS
A246.4 3/QX.4/DO4	3 DO4	=269&EFS/249+5269-K33:11	269_06_01_A_GS
A246.6 4/QX.6/DO6	4 DO6	=269&EFS/250+5269-K36:11	269_06_02_A_GS
A246.1 5/QX.1/DO1	5 DO1	=269&EFS/248+4269-K29:11	269_05_02_A_AS
A246.3 6/QX.3/DO3	6 DO3	=269&EFS/249+4269-K32:11	269_06_01_A_AS
A246.5 7/QX.5/DO5	7 DO5	=269&EFS/250+4269-K35:11	269_06_02_A_AS
A246.7 8/QX.7/DO7	8 DO7	=269&EFS/251+4269-K38:11	269_07_01_A_AS

6ES7132-4BF00-0AA0
+ TM-E15C24-01

-A8
&ETC/277.7

ET200S SIEMENS
8 DO DC24V 0,5A

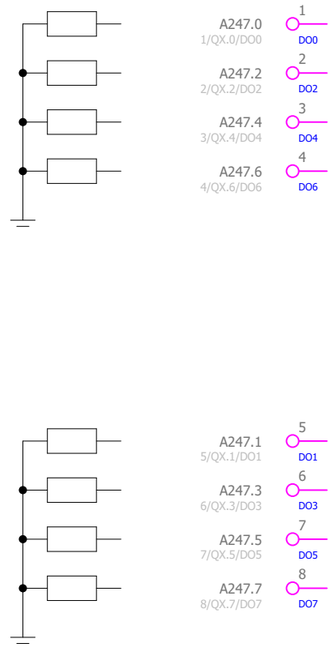

A247.0 1/QX.0/DO0	1 DO0	=269&EFS/251+5269-K39:11	269_07_01_A_GS
A247.2 2/QX.2/DO2	2 DO2	=269&EFS/252+5269-K42:11	269_07_02_A_GS
A247.4 3/QX.4/DO4	3 DO4	=269&EFS/253+5269-K45:11	269_08_01_A_GS
A247.6 4/QX.6/DO6	4 DO6	=269&EFS/254+5269-K48:11	269_08_02_A_GS
A247.1 5/QX.1/DO1	5 DO1	=269&EFS/252+4269-K41:11	269_07_02_A_AS
A247.3 6/QX.3/DO3	6 DO3	=269&EFS/253+4269-K44:11	269_08_01_A_AS
A247.5 7/QX.5/DO5	7 DO5	=269&EFS/254+4269-K47:11	269_08_02_A_AS
A247.7 8/QX.7/DO7	8 DO7	=280&EFS/256+8280-K1:A1	280_281_A_FU_START

6ES7132-4BF00-0AA0
+ TM-E15C24-01

-A9
&ETC/277.7

ET200S SIEMENS
8 DO DC24V 0,5A

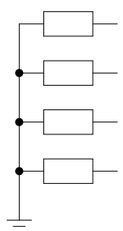

A248.0 1/QX.0/DO0	1 DO0	=280&EFS/257+6280-F2:11	280_A
A248.2 2/QX.2/DO2	2 DO2	=282&EFS/259+4282-K1:A1	282_A
A248.4 3/QX.4/DO4	3 DO4		Spare
A248.6 4/QX.6/DO6	4 DO6		Spare

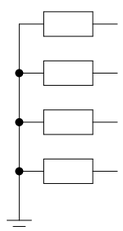

A248.1 5/QX.1/DO1	5 DO1	=281&EFS/258+6281-F1:11	281_A
A248.3 6/QX.3/DO3	6 DO3		Spare
A248.5 7/QX.5/DO5	7 DO5		Spare
A248.7 8/QX.7/DO7	8 DO7		Spare

6ES7132-4BF00-0AA0
+ TM-E15C24-01

-PAW1
&ETC/277.7

ET200S SIEMENS
2 AO U STANDARD

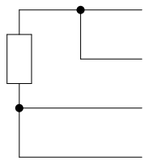

PAW366	1 QV	=280&EFS/256=280-G1:2	280_281_AA
	2 S+	=280&EFS/256.7	
	3 Mana	=280&EFS/256.7	
	4 S-	=280&EFS/256.7	

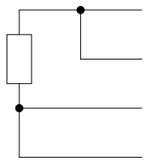

PAW368	5 QV		Spare
	6 S+		
	7 Mana		
	8 S-		

6ES7135-4FB00-0AB0
+ TM-E15C24-01

			Date	12.12.2019	Mixed feed plant Golden Poultry	BEYTEC ... your gateway to success	overview analog outputs	= SPS_F6
			Ed.	willen	Field 6			+ F26
			Appr				1 : 1	Part II
Modification	Date	Name	Original	V:\EPLAN\Projekte\Company\Beytec\2018\Feed Mill Alssad.elk	Replaced by			Page 274
								Page 605

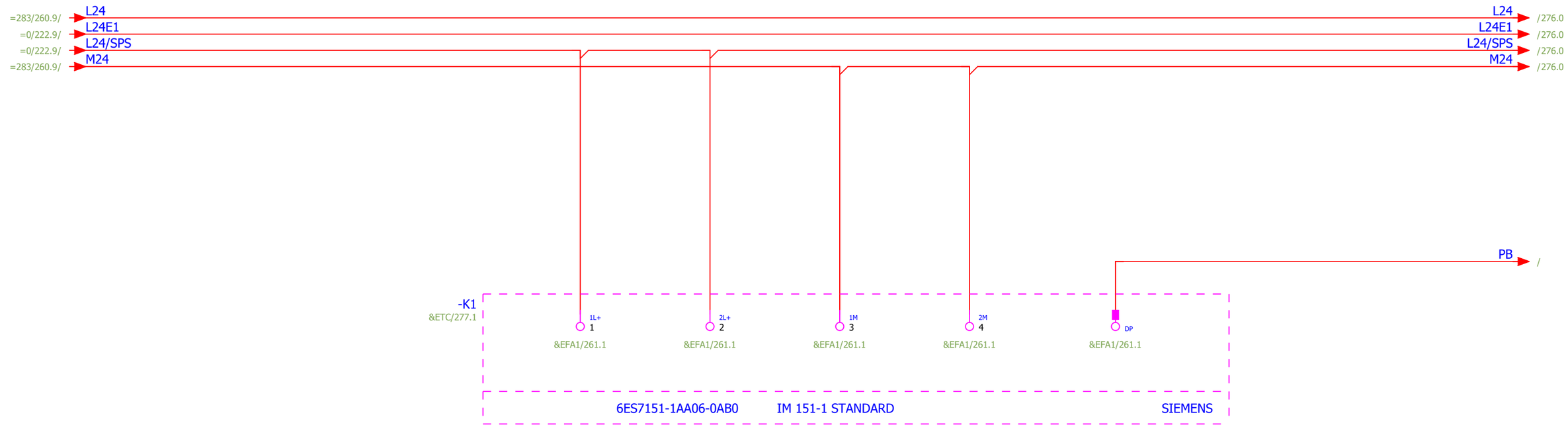
=283/260.9/
L24
=0/222.9/
L24E1
=0/222.9/
L24/SPS
=283/260.9/
M24
L24
/276.0
L24E1
/276.0
L24/SPS
/276.0
M24
/276.0
PB
/
-K1
&ETC/277.1
1L+
1
&EFA1/261.1
2L+
2
&EFA1/261.1
1M
3
&EFA1/261.1
2M
4
&EFA1/261.1
DP
&EFA1/261.1
6ES7151-1AA06-0AB0
IM 151-1 STANDARD
SIEMENS

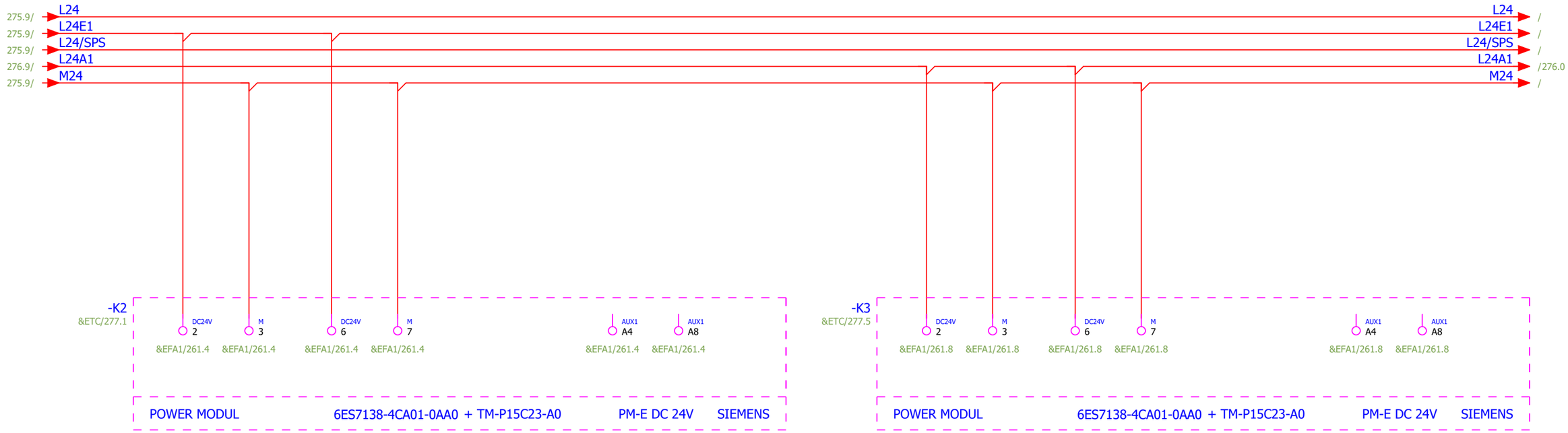

			Date	12.12.2019	Mixed feed plant Golden Poultry	BEYTEC ... your gateway to success	PLC power supply power module			= SPS_F6	
			Ed.	willen						+ F26	
			Appr		Field 6			1 : 1	Part II	Page	276
Modification	Date	Name	Original	V:\EPLAN\Projekte\Company\Replace\Beytec\2018\Feed Mill Alssad.elk	Replaced by					Page	605

Replaced by BEYTEC

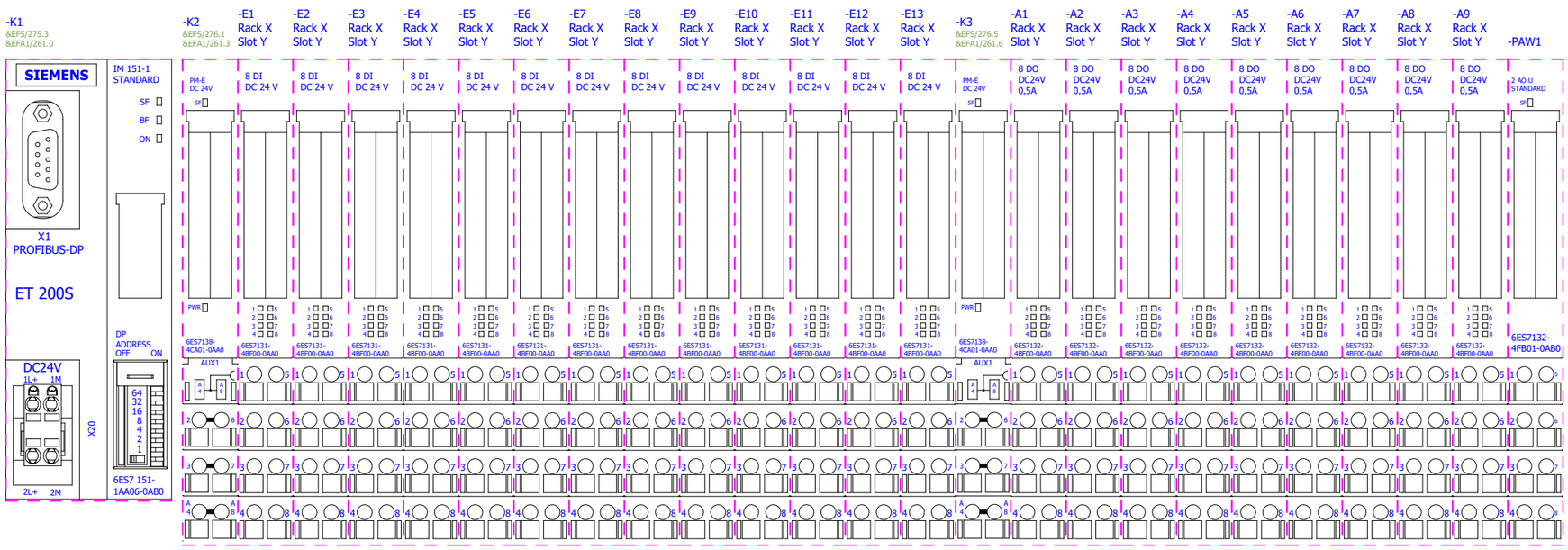
-K1
&EFS/275.3
&EFA1/261.0
SIEMENS
IM 151-1
STANDARD
SF
BF
ON
X1
PROFIBUS-DP
ET 200S
DP
ADDRESS
OFF ON
DC24V
1L+ 1M
2L+ 2M
X20
6ES7 151-
1AA06-0AB0
-K2
&EFS/276.1
&EFA1/261.3
PM-E
DC 24V
6ES7138-
4CA01-0AA0
AUX1
-E1 Rack X Slot Y
-E2 Rack X Slot Y
-E3 Rack X Slot Y
-E4 Rack X Slot Y
-E5 Rack X Slot Y
-E6 Rack X Slot Y
-E7 Rack X Slot Y
-E8 Rack X Slot Y
-E9 Rack X Slot Y
-E10 Rack X Slot Y
-E11 Rack X Slot Y
-E12 Rack X Slot Y
-E13 Rack X Slot Y
8 DI
DC 24 V
6ES7131-
4BF00-0AA0
-K3
&EFS/276.5
&EFA1/261.6
-A1 Rack X Slot Y
-A2 Rack X Slot Y
-A3 Rack X Slot Y
-A4 Rack X Slot Y
-A5 Rack X Slot Y
-A6 Rack X Slot Y
-A7 Rack X Slot Y
-A8 Rack X Slot Y
-A9 Rack X Slot Y
8 DO
DC24V
0,5A
6ES7132-
4BF00-0AA0
-PAW1
2 AO U
STANDARD
6ES7132-
4FB01-0AB0

BEYTEC

... your gateway to success

Company / customer	BeyTec
Project description	Golden Poultry
Job number	Part II
Mounting location	field 7 external signals

Technical data:

Operating voltage	400 V
Operating frequency	50 Hz
Operating current	
Power network	
Control voltage	24VDC
Protection class electrical	SK I
Degree of protection	IP54
Responsible for project	Willen

Created on	21.10.2019		
Edit date	12.12.2019	by (short name) willen	Number of pages 605

Table of contents

Column X: An automatically generated page was edited

F06_001_EN

Page	Page description	supplementary page field	Date	Edited by	X
++A1+F27&BAA/278	Title page / cover sheet		12.12.2019	willen	X
++A1+F27&BAB/279	Table of contents : ++A1+F27&BAA/278 - =11.7++A1+F27&EFS/310		12.12.2019	willen	
++A1+F27&BAB/280	Table of contents : =11.8++A1+F27&EFS/311 - =225.1.3++A1+F27&EFS/343		12.12.2019	willen	
++A1+F27&BAB/281	Table of contents : =225.1.4++A1+F27&EFS/344 - =250.1++A1+F27&EFS/376		12.12.2019	willen	
++A1+F27&BAB/282	Table of contents : =250.2++A1+F27&EFS/377 - =357.1++A1+F27&EFS/409		12.12.2019	willen	
++A1+F27&BAB/283	Table of contents : =358.1++A1+F27&EFS/410 - =269++A1+F27&EFS/442		12.12.2019	willen	
++A1+F27&BAB/284	Table of contents : =269++A1+F27&EFS/443 - =SPS_F7.3++A1+F27&EFA1/475		12.12.2019	willen	
++A1+F27&BAB/285	Table of contents : =SPS_F7.3++A1+F27&EFA1/476 - =SPS_F7.3++A1+F27&ETC/484		12.12.2019	willen	
++A1+F27&BPA/286	Summarized parts list : ENT.M22-I1 - SIE.6ES7132-4BB01-0AA0+TM-E15C24-A1		12.12.2019	willen	X
=0++A1+F27&EFS/287	Control voltage field 7		12.12.2019	willen	
=8.1++A1+F27&EFS/288	Full Silo 4		12.12.2019	willen	
=8.1++A1+F27&EFS/289	Full Silo 5		12.12.2019	willen	
=8.1++A1+F27&EFS/290	Full Silo 6		12.12.2019	willen	
=8.1++A1+F27&EFS/291	Full Silo 7		12.12.2019	willen	
=8.1++A1+F27&EFS/292	Full Silo 8		12.12.2019	willen	
=8.2++A1+F27&EFS/293	Empty detector silo 4		12.12.2019	willen	
=8.2++A1+F27&EFS/294	Empty detector silo 5		12.12.2019	willen	
=8.2++A1+F27&EFS/295	Empty detector silo 6		12.12.2019	willen	
=8.2++A1+F27&EFS/296	Empty detector silo 7		12.12.2019	willen	
=8.2++A1+F27&EFS/297	Empty detector silo 8		12.12.2019	willen	
=9.4++A1+F27&EFS/298	Sweep auger		12.12.2019	willen	
=9.5++A1+F27&EFS/299	Sweep auger		12.12.2019	willen	
=9.6++A1+F27&EFS/300	Sweep auger		12.12.2019	willen	
=9.7++A1+F27&EFS/301	Sweep auger		12.12.2019	willen	
=9.8++A1+F27&EFS/302	Sweep auger		12.12.2019	willen	
=11.4++A1+F27&EFS/303	limit switch hand gate 1		12.12.2019	willen	
=11.4++A1+F27&EFS/304	limit switch hand gate 2		12.12.2019	willen	
=11.5++A1+F27&EFS/305	limit switch hand gate 1		12.12.2019	willen	
=11.5++A1+F27&EFS/306	limit switch hand gate 2		12.12.2019	willen	
=11.6++A1+F27&EFS/307	limit switch hand gate 1		12.12.2019	willen	
=11.6++A1+F27&EFS/308	limit switch hand gate 2		12.12.2019	willen	
=11.7++A1+F27&EFS/309	limit switch hand gate 1		12.12.2019	willen	
=11.7++A1+F27&EFS/310	limit switch hand gate 2		12.12.2019	willen	

Table of contents

Column X: An automatically generated page was edited

F06_001_EN

Page	Page description	supplementary page field	Date	Edited by	X
=11.8++A1+F27&EFS/311	limit switch hand gate 1		12.12.2019	willen	
=11.8++A1+F27&EFS/312	limit switch hand gate 2		12.12.2019	willen	
=13++A1+F27&EFS/313	overflow flap & rotation speed monitor		12.12.2019	willen	
=50++A1+F27&EFS/314	overflow flap & rotation speed monitor		12.12.2019	willen	
=51++A1+F27&EFS/315	overflow flap & rotation speed monitor		12.12.2019	willen	
=55++A1+F27&EFS/316	overflow flap & rotation speed monitor		12.12.2019	willen	
=56++A1+F27&EFS/317	overflow flap & rotation speed monitor		12.12.2019	willen	
=57++A1+F27&EFS/318	overflow flap & rotation speed monitor		12.12.2019	willen	
=113++A1+F27&EFS/319	overflow flap & rotation speed monitor		12.12.2019	willen	
=114.2++A1+F27&EFS/320	Full-level-indicator		12.12.2019	willen	
=205++A1+F27&EFS/321	elevator rpm		12.12.2019	willen	
=205++A1+F27&EFS/322	elevator belt misalignment		12.12.2019	willen	
=205.1++A1+F27&EFS/323	Flap box		12.12.2019	willen	
=206.1++A1+F27&EFS/324	low-level indicator		12.12.2019	willen	
=206.2.1++A1+F27&EFS/325	pneumatic slide		12.12.2019	willen	
=206.2.2++A1+F27&EFS/326	pneumatic slide		12.12.2019	willen	
=209.1++A1+F27&EFS/327	Full-level-indicator		12.12.2019	willen	
=209.2++A1+F27&EFS/328	low-level indicator		12.12.2019	willen	
=211++A1+F27&EFS/329	rotation speed monitor		12.12.2019	willen	
=212++A1+F27&EFS/330	rotation speed monitor		12.12.2019	willen	
=213++A1+F27&EFS/331	overflow flap & rotation speed monitor		12.12.2019	willen	
=214.2++A1+F27&EFS/332	Full-level-indicator		12.12.2019	willen	
=221++A1+F27&EFS/333	intake 4		12.12.2019	willen	
=221++A1+F27&EFS/334	overflow flap & rotation speed monitor		12.12.2019	willen	
=222++A1+F27&EFS/335	elevator rpm		12.12.2019	willen	
=222++A1+F27&EFS/336	elevator belt misalignment		12.12.2019	willen	
=223.1++A1+F27&EFS/337	Flap box		12.12.2019	willen	
=223.2++A1+F27&EFS/338	Flap box		12.12.2019	willen	
=223.3++A1+F27&EFS/339	Flap box		12.12.2019	willen	
=223.4++A1+F27&EFS/340	Flap box		12.12.2019	willen	
=225.1.1++A1+F27&EFS/341	Full-level-indicator		12.12.2019	willen	
=225.1.2++A1+F27&EFS/342	Full-level-indicator		12.12.2019	willen	
=225.1.3++A1+F27&EFS/343	Full-level-indicator		12.12.2019	willen	

Table of contents

Column X: An automatically generated page was edited

F06_001_EN

Page	Page description	supplementary page field	Date	Edited by	X
=225.1.4++A1+F27&EFS/344	Full-level-indicator		12.12.2019	willen	
=225.1.5++A1+F27&EFS/345	Full-level-indicator		12.12.2019	willen	
=225.2.1++A1+F27&EFS/346	low-level indicator		12.12.2019	willen	
=225.2.2++A1+F27&EFS/347	low-level indicator		12.12.2019	willen	
=225.2.3++A1+F27&EFS/348	low-level indicator		12.12.2019	willen	
=225.2.4++A1+F27&EFS/349	low-level indicator		12.12.2019	willen	
=225.2.5++A1+F27&EFS/350	low-level indicator		12.12.2019	willen	
=228++A1+F27&EFS/351	Flap		12.12.2019	willen	
=229++A1+F27&EFS/352	Flap		12.12.2019	willen	
=230++A1+F27&EFS/353	Hand addition		12.12.2019	willen	
=230.1++A1+F27&EFS/354	Flap		12.12.2019	willen	
=240.1++A1+F27&EFS/355	low-level indicator		12.12.2019	willen	
=241++A1+F27&EFS/356	Head slider		12.12.2019	willen	
=242++A1+F27&EFS/357	Mixer		12.12.2019	willen	
=242++A1+F27&EFS/358	Mixer		12.12.2019	willen	
=243++A1+F27&EFS/359	Full-level-indicator		12.12.2019	willen	
=243++A1+F27&EFS/360	low-level indicator		12.12.2019	willen	
=243++A1+F27&EFS/361	Flowmeter		12.12.2019	willen	
=243++A1+F27&EFS/362	Pneumatic shut-off valve		12.12.2019	willen	
=243++A1+F27&EFS/363	Pneumatic blow-off valve		12.12.2019	willen	
=244.1++A1+F27&EFS/364	low-level indicator		12.12.2019	willen	
=245++A1+F27&EFS/365	overflow flap & rotation speed monitor		12.12.2019	willen	
=246++A1+F27&EFS/366	elevator rpm		12.12.2019	willen	
=246++A1+F27&EFS/367	elevator belt misalignment		12.12.2019	willen	
=247++A1+F27&EFS/368	overflow flap & rotation speed monitor		12.12.2019	willen	
=247.11++A1+F27&EFS/369	pneumatic slide		12.12.2019	willen	
=247.12++A1+F27&EFS/370	Flap box		12.12.2019	willen	
=247.21++A1+F27&EFS/371	pneumatic slide		12.12.2019	willen	
=247.22++A1+F27&EFS/372	Flap box		12.12.2019	willen	
=247.23++A1+F27&EFS/373	Flap box		12.12.2019	willen	
=248++A1+F27&EFS/374	overflow flap & rotation speed monitor		12.12.2019	willen	
=250.1++A1+F27&EFS/375	Full Silo 421		12.12.2019	willen	
=250.1++A1+F27&EFS/376	Full Silo 422		12.12.2019	willen	

Table of contents

Column X: An automatically generated page was edited

F06_001_EN

Page	Page description	supplementary page field	Date	Edited by	X
=250.2++A1+F27&EFS/377	Empty detector silo 421		12.12.2019	willen	
=250.2++A1+F27&EFS/378	Empty detector silo 422		12.12.2019	willen	
=250.3++A1+F27&EFS/379	pneumatic slide silo 421		12.12.2019	willen	
=250.3++A1+F27&EFS/380	pneumatic slide silo 422		12.12.2019	willen	
=250.5++A1+F27&EFS/381	low-level indicator		12.12.2019	willen	
=350.1++A1+F27&EFS/382	Full Silo 431		12.12.2019	willen	
=350.1++A1+F27&EFS/383	Full Silo 432		12.12.2019	willen	
=350.2++A1+F27&EFS/384	Empty detector silo 431		12.12.2019	willen	
=350.2++A1+F27&EFS/385	Empty detector silo 432		12.12.2019	willen	
=350.3++A1+F27&EFS/386	pneumatic slide silo 431		12.12.2019	willen	
=350.3++A1+F27&EFS/387	pneumatic slide silo 432		12.12.2019	willen	
=350.5++A1+F27&EFS/388	low-level indicator		12.12.2019	willen	
=251++A1+F27&EFS/389	overflow flap & rotation speed monitor		12.12.2019	willen	
=255++A1+F27&EFS/390	high-level-indicatorcooler 1		12.12.2019	willen	
=255++A1+F27&EFS/391	level detector cooler		12.12.2019	willen	
=255++A1+F27&EFS/392	matarial-indicator cooler 1		12.12.2019	willen	
=255++A1+F27&EFS/393	limit switch discharge cooler 1		12.12.2019	willen	
=257.1++A1+F27&EFS/394	Full-level-indicator		12.12.2019	willen	
=258.1++A1+F27&EFS/395	overflow flap & rotation speed monitor		12.12.2019	willen	
=260++A1+F27&EFS/396	bypass flap		12.12.2019	willen	
=260.2++A1+F27&EFS/397	roller distance crumbler 1		12.12.2019	willen	
=261++A1+F27&EFS/398	overflow flap & rotation speed monitor		12.12.2019	willen	
=262++A1+F27&EFS/399	elevator rpm		12.12.2019	willen	
=262++A1+F27&EFS/400	elevator belt misalignment		12.12.2019	willen	
=263++A1+F27&EFS/401	Flap box		12.12.2019	willen	
=264++A1+F27&EFS/402	vibration monitoring		12.12.2019	willen	
=265++A1+F27&EFS/403	overflow flap & rotation speed monitor		12.12.2019	willen	
=351++A1+F27&EFS/404	overflow flap		12.12.2019	willen	
=355++A1+F27&EFS/405	high-level-indicatorcooler 2		12.12.2019	willen	
=355++A1+F27&EFS/406	level detector cooler		12.12.2019	willen	
=355++A1+F27&EFS/407	matarial-indicator cooler 2		12.12.2019	willen	
=355++A1+F27&EFS/408	limit switch discharge cooler 2		12.12.2019	willen	
=357.1++A1+F27&EFS/409	Full-level-indicator		12.12.2019	willen	

Table of contents

Column X: An automatically generated page was edited

F06_001_EN

Page	Page description	supplementary page field	Date	Edited by	X
=358.1++A1+F27&EFS/410	overflow flap & rotation speed monitor		12.12.2019	willen	
=360++A1+F27&EFS/411	bypass flap		12.12.2019	willen	
=360.2++A1+F27&EFS/412	roller distance crumbler 2		12.12.2019	willen	
=361++A1+F27&EFS/413	overflow flap & rotation speed monitor		12.12.2019	willen	
=362++A1+F27&EFS/414	elevator rpm		12.12.2019	willen	
=362++A1+F27&EFS/415	elevator belt misalignment		12.12.2019	willen	
=363++A1+F27&EFS/416	Flap box		12.12.2019	willen	
=364++A1+F27&EFS/417	vibration monitoring		12.12.2019	willen	
=365++A1+F27&EFS/418	overflow flap & rotation speed monitor		12.12.2019	willen	
=266++A1+F27&EFS/419	overflow flap & rotation speed monitor		12.12.2019	willen	
=267++A1+F27&EFS/420	overflow flap & rotation speed monitor		12.12.2019	willen	
=268.1++A1+F27&EFS/421	Full Silo 521		12.12.2019	willen	
=268.1++A1+F27&EFS/422	Full Silo 522		12.12.2019	willen	
=268.1++A1+F27&EFS/423	Full Silo 523		12.12.2019	willen	
=268.1++A1+F27&EFS/424	Full Silo 524		12.12.2019	willen	
=268.1++A1+F27&EFS/425	Full Silo 525		12.12.2019	willen	
=268.1++A1+F27&EFS/426	Full Silo 526		12.12.2019	willen	
=268.1++A1+F27&EFS/427	Full Silo 527		12.12.2019	willen	
=268.1++A1+F27&EFS/428	Full Silo 528		12.12.2019	willen	
=268.2++A1+F27&EFS/429	Empty detector silo 521		12.12.2019	willen	
=268.2++A1+F27&EFS/430	Empty detector silo 522		12.12.2019	willen	
=268.2++A1+F27&EFS/431	Empty detector silo 523		12.12.2019	willen	
=268.2++A1+F27&EFS/432	Empty detector silo 524		12.12.2019	willen	
=268.2++A1+F27&EFS/433	Empty detector silo 525		12.12.2019	willen	
=268.2++A1+F27&EFS/434	Empty detector silo 526		12.12.2019	willen	
=268.2++A1+F27&EFS/435	Empty detector silo 527		12.12.2019	willen	
=268.2++A1+F27&EFS/436	Empty detector silo 528		12.12.2019	willen	
=269++A1+F27&EFS/437	mot. slide 1 silo 521		12.12.2019	willen	
=269++A1+F27&EFS/438	mot. slide 1 silo 522		12.12.2019	willen	
=269++A1+F27&EFS/439	mot. slide 1 silo 523		12.12.2019	willen	
=269++A1+F27&EFS/440	mot. slide 1 silo 524		12.12.2019	willen	
=269++A1+F27&EFS/441	mot. slide 1 silo 525		12.12.2019	willen	
=269++A1+F27&EFS/442	mot. slide 1 silo 526		12.12.2019	willen	

Table of contents

Column X: An automatically generated page was edited

F06_001_EN

Page	Page description	supplementary page field	Date	Edited by	X
=269++A1+F27&EFS/443	mot. slide 1 silo 527		12.12.2019	willen	
=269++A1+F27&EFS/444	mot. slide 1 silo 528		12.12.2019	willen	
=280++A1+F27&EFS/445	overflow flap & rotation speed monitor		12.12.2019	willen	
=281++A1+F27&EFS/446	overflow flap & rotation speed monitor		12.12.2019	willen	
=282++A1+F27&EFS/447	overflow flap & rotation speed monitor		12.12.2019	willen	
=283.1++A1+F27&EFS/448	demand indicator		12.12.2019	willen	
=283.1++A1+F27&EFS/449	Bagging		12.12.2019	willen	
=SPS_F7.1++A1+F27&EFA1/450	overview inputs		12.12.2019	willen	
=SPS_F7.1++A1+F27&EFA1/451	overview inputs		12.12.2019	willen	
=SPS_F7.1++A1+F27&EFA1/452	overview inputs		12.12.2019	willen	
=SPS_F7.1++A1+F27&EFA1/453	overview inputs		12.12.2019	willen	
=SPS_F7.1++A1+F27&EFA1/454	overview inputs		12.12.2019	willen	
=SPS_F7.1++A1+F27&EFA1/455	overview inputs		12.12.2019	willen	
=SPS_F7.1++A1+F27&EFA1/456	overview inputs		12.12.2019	willen	
=SPS_F7.1++A1+F27&EFA1/457	overview inputs		12.12.2019	willen	
=SPS_F7.1++A1+F27&EFS/458	power supply PLC		12.12.2019	willen	
=SPS_F7.1++A1+F27&EFS/459	PLC power supply bus coupler		12.12.2019	willen	
=SPS_F7.1++A1+F27&EFS/460	PLC power supply power module		12.12.2019	willen	
=SPS_F7.1++A1+F27&ETC/461	PLC overview		12.12.2019	willen	
=SPS_F7.1++A1+F27&ETC/462	PLC overview field 7 station 1		12.12.2019	willen	
=SPS_F7.2++A1+F27&EFA1/463	overview inputs		12.12.2019	willen	
=SPS_F7.2++A1+F27&EFA1/464	overview inputs		12.12.2019	willen	
=SPS_F7.2++A1+F27&EFA1/465	overview inputs		12.12.2019	willen	
=SPS_F7.2++A1+F27&EFA1/466	overview inputs		12.12.2019	willen	
=SPS_F7.2++A1+F27&EFA1/467	overview inputs		12.12.2019	willen	
=SPS_F7.2++A1+F27&EFA1/468	overview inputs		12.12.2019	willen	
=SPS_F7.2++A1+F27&EFA1/469	overview inputs		12.12.2019	willen	
=SPS_F7.2++A1+F27&EFA1/470	overview inputs		12.12.2019	willen	
=SPS_F7.2++A1+F27&EFS/471	PLC power supply bus coupler		12.12.2019	willen	
=SPS_F7.2++A1+F27&EFS/472	PLC power supply power module		12.12.2019	willen	
=SPS_F7.2++A1+F27&ETC/473	PLC overview field 7 station 2		12.12.2019	willen	
=SPS_F7.3++A1+F27&EFA1/474	overview inputs		12.12.2019	willen	
=SPS_F7.3++A1+F27&EFA1/475	overview inputs		12.12.2019	willen	

Table of contents

Column X: An automatically generated page was edited

F06_001_EN

Page	Page description	supplementary page field	Date	Edited by	X
=SPS_F7.3++A1+F27&EFA1/476	overview outputs		12.12.2019	willen	
=SPS_F7.3++A1+F27&EFA1/477	overview outputs		12.12.2019	willen	
=SPS_F7.3++A1+F27&EFA1/478	overview outputs		12.12.2019	willen	
=SPS_F7.3++A1+F27&EFA1/479	overview outputs		12.12.2019	willen	
=SPS_F7.3++A1+F27&EFA1/480	overview outputs		12.12.2019	willen	
=SPS_F7.3++A1+F27&EFS/481	PLC power supply bus coupler		12.12.2019	willen	
=SPS_F7.3++A1+F27&EFS/482	PLC power supply power module		12.12.2019	willen	
=SPS_F7.3++A1+F27&EFS/483	PLC power supply power module		12.12.2019	willen	
=SPS_F7.3++A1+F27&ETC/484	PLC overview field 7 station 3		12.12.2019	willen	

Summarized parts list

F02_002_en_US

Order number	Quantity	Designation	Type number	Supplier
216535	6	Aufbaugehäuse einfach M22-I1	M22-I1	EATON
216380	28	Contact element, 1N/O, base fixing, 6. contact, screw connection	M22-KC10	EATON
216562	16	LED element, green, base fixing, 12-30VAC/DC	M22-LEDC-G	EATON
216927	16	Illuminated pushbutton actuator, flush, green, momentary	M22-DL-G	EATON
216392	6	Schildträger	M22S-ST-X	EATON
	0			
IF503A	25	Inductive sensor, DC PNP, normally open	IFK3003BBPKG/AM/US104DPS/3G/3D	IFM
DI520A	30	Compact speed monitor M30, DC PNP, normally open	DIA3010-ZPKG/3D	IFM
ID502A	20	Inductive sensor, DC PNP, normally open / closed programmable	IDE3060-FPKG/3D	IFM
216532	10	Aufbaugehäuse dreifach M22-I3	M22-I3	EATON
216560	10	LED element, white, base fixing, 12-30VAC/DC	M22-LEDC-W	EATON
216929	10	Illuminated pushbutton actuator, flush, yellow, momentary	M22-DL-Y	EATON
216594	2	Pushbutton, flush, red, momentary	M22-D-R	EATON
6ES7317-2AK14-0AB0	1	CPU317-2 DP, 1 MB	6ES7317-2AK14-0AB0	SIE
6GK7343-1EX30-0XE0	1	COMMUNICATION PROCESSOR CP 343-1	6GK7343-1EX30-0XE0	SIE
6ES7131-4BB01-0AA0 / 6ES7193-4CA30-0AA0	132	2DI ST, 24V DC / TM-E15C24-A1	6ES7131-4BB01-0AA0 / 6ES7193-4CA30-0AA0	SIE
6ES7151-1AA06-0AB0	3	ET200S, IM151-1 STD, 12MBIT/S	6ES7151-1AA06-0AB0	SIE
6ES7138-4CA01-0AA0 / 6ES7193-4CD30-0AA0	7	PM-E, DC 24V / TM-P15C23-A0	6ES7138-4CA01-0AA0 / 6ES7193-4CD30-0AA0	SIE
6ES7132-4BB01-0AA0 / 6ES7193-4CA30-0AA0	36	2DO ST, 24V DC, 0.5A / TM-E15C24-A1	6ES7132-4BB01-0AA0 / 6ES7193-4CA30-0AA0	SIE

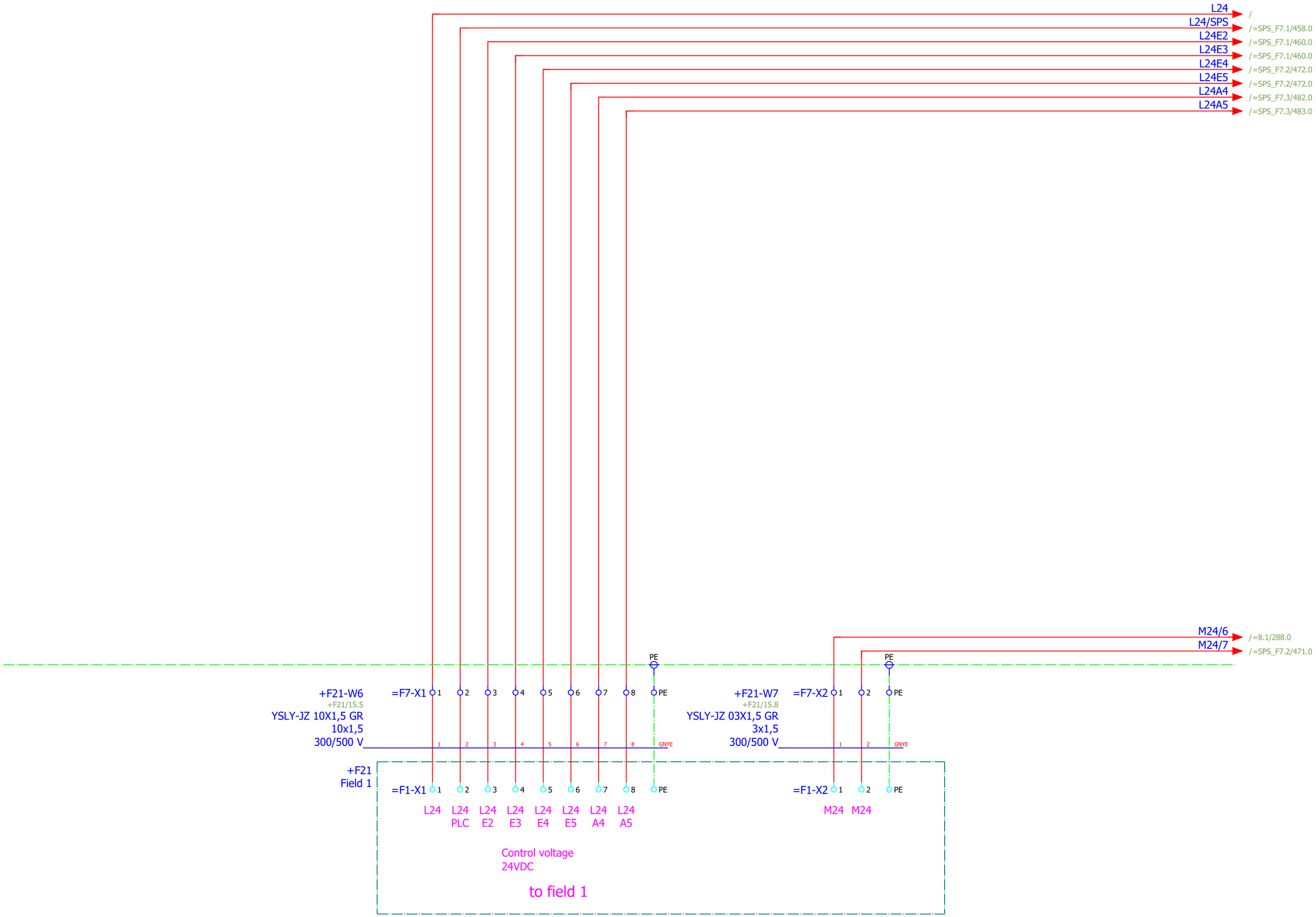
L24
/
L24/SPS
/=SPS_F7.1/458.0
L24E2
/=SPS_F7.1/460.0
L24E3
/=SPS_F7.1/460.0
L24E4
/=SPS_F7.2/472.0
L24E5
/=SPS_F7.2/472.0
L24A4
/=SPS_F7.3/482.0
L24A5
/=SPS_F7.3/483.0
M24/6
/=8.1/288.0
M24/7
/=SPS_F7.2/471.0
PE
+F21-W6
+F21/15.5
YSLY-JZ 10X1,5 GR
10x1,5
300/500 V
=F7-X1
+F21-W7
+F21/15.8
YSLY-JZ 03X1,5 GR
3x1,5
300/500 V
=F7-X2
+F21
Field 1
=F1-X1
=F1-X2
L24 L24 L24 L24 L24 L24 L24 L24
PLC E2 E3 E4 E5 A4 A5
M24 M24
Control voltage
24VDC
to field 1

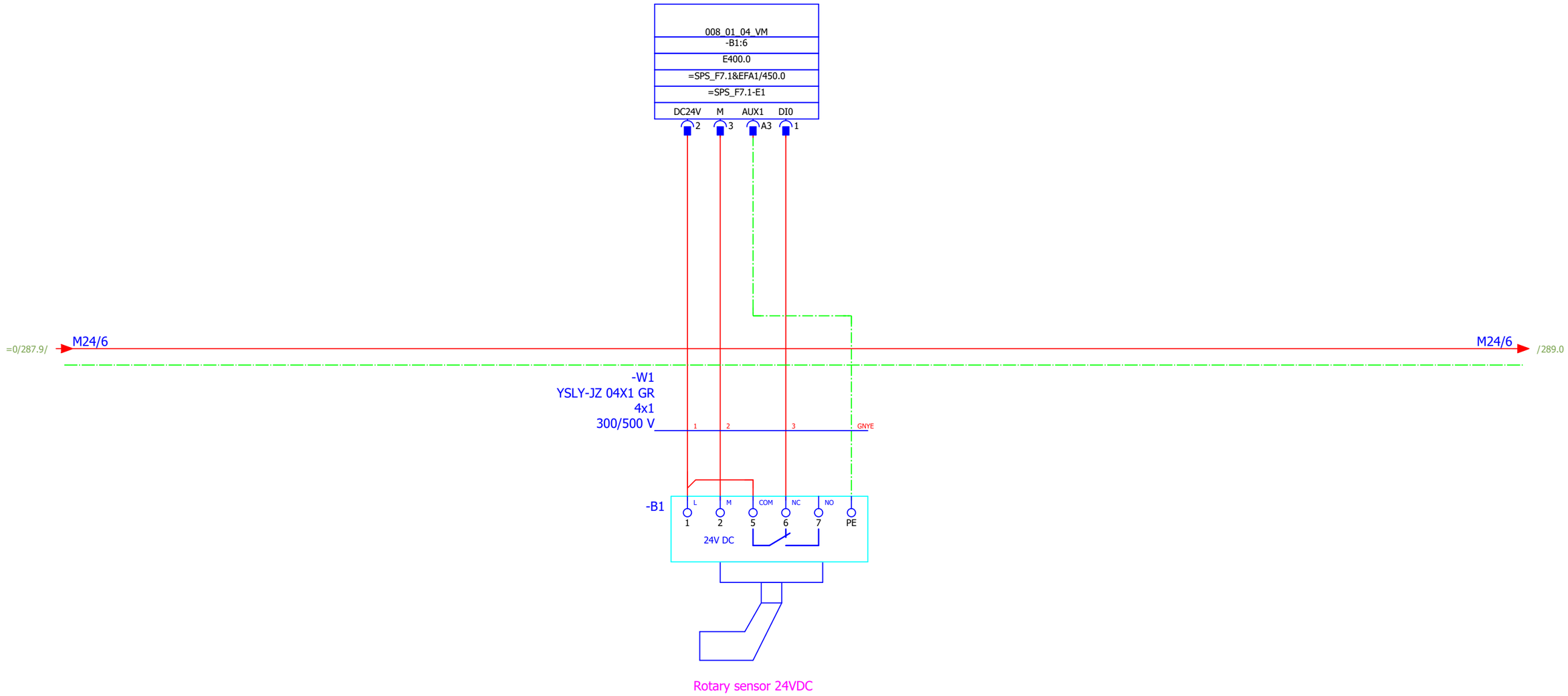
008_01_04_VM
-B1:6
E400.0
=SPS_F7.1&EFA1/450.0
=SPS_F7.1-E1
DC24V
M
AUX1
DI0
2
3
A3
1
=0/287.9/
M24/6
M24/6
/289.0
-W1
YSLY-JZ 04X1 GR
4x1
300/500 V
1
2
3
GNYE
-B1
L
M
COM
NC
NO
1
2
5
6
7
PE
24V DC
Rotary sensor 24VDC

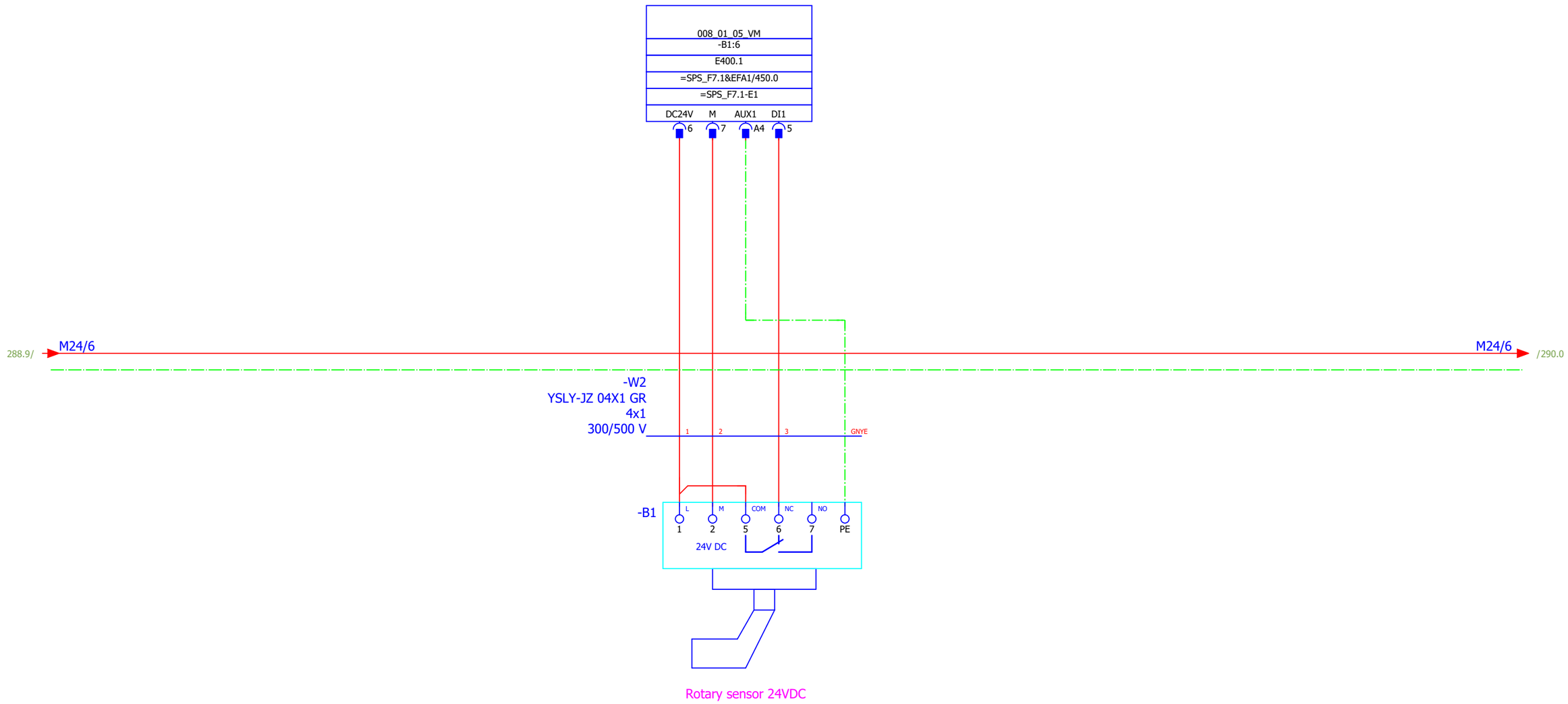

			Date	12.12.2019	Mixed feed plant Golden Poultry	BEYTEC ... your gateway to success	Full Silo 5	= 8.1	
			Ed.	willen				+ F27	
			Appr		field 7 external signals			1 : 1 Part II	Page 289
Modification	Date	Name	Original	V:\EPLAN\Projekte\Company\Replace\Beytec\2018\Feed Mill Alssad.elk	Replaced by				Page 605

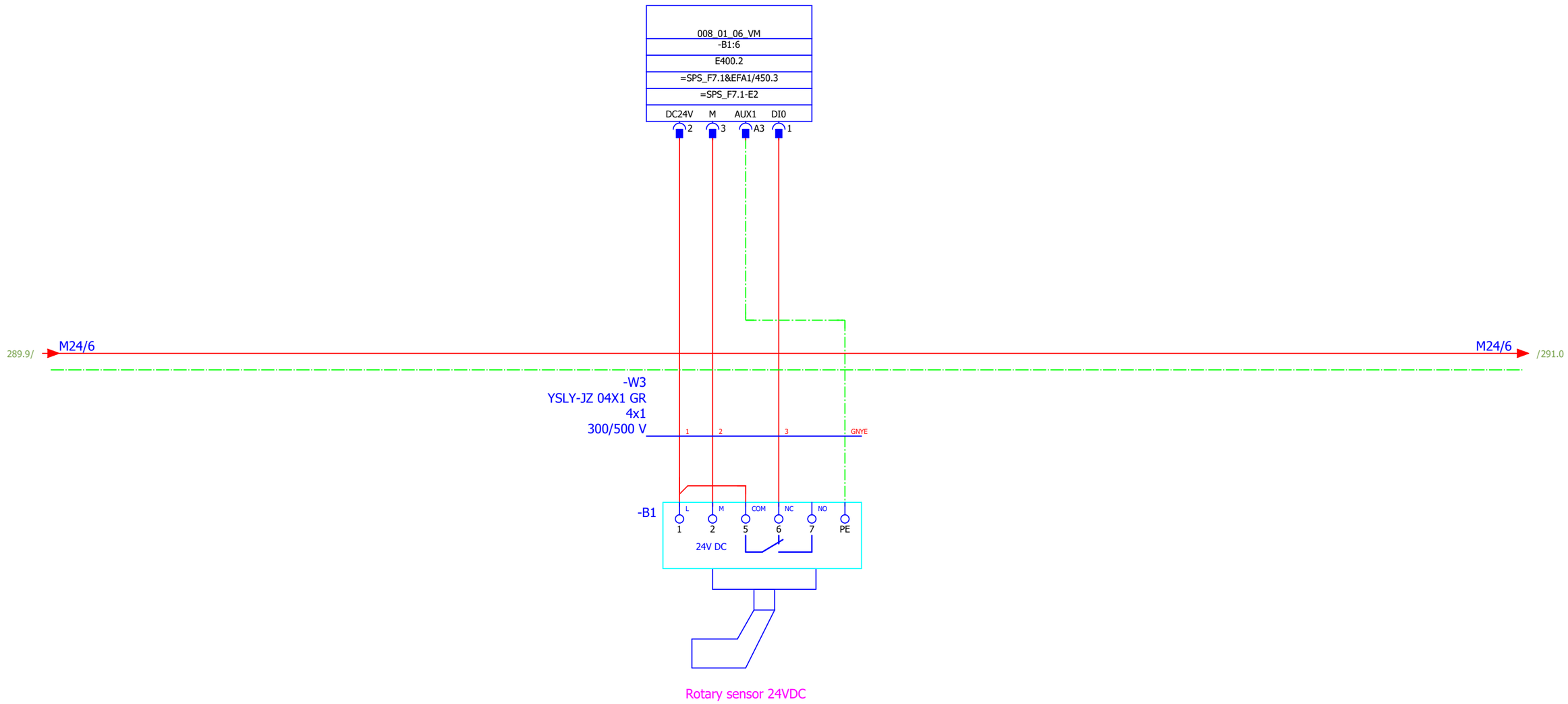

Rotary sensor 24VDC

			Date	12.12.2019	Mixed feed plant Golden Poultry	BEYTEC ... your gateway to success	Full Silo 6	= 8.1	
			Ed.	willen				+ F27	
			Appr		field 7 external signals			1 : 1 / Part II	Page 290
Modification	Date	Name	Original	V:\EPLAN\Projekte\Company\Replace\Beytec\2018\Feed Mill Alssad.elk	Replaced by				Page 605

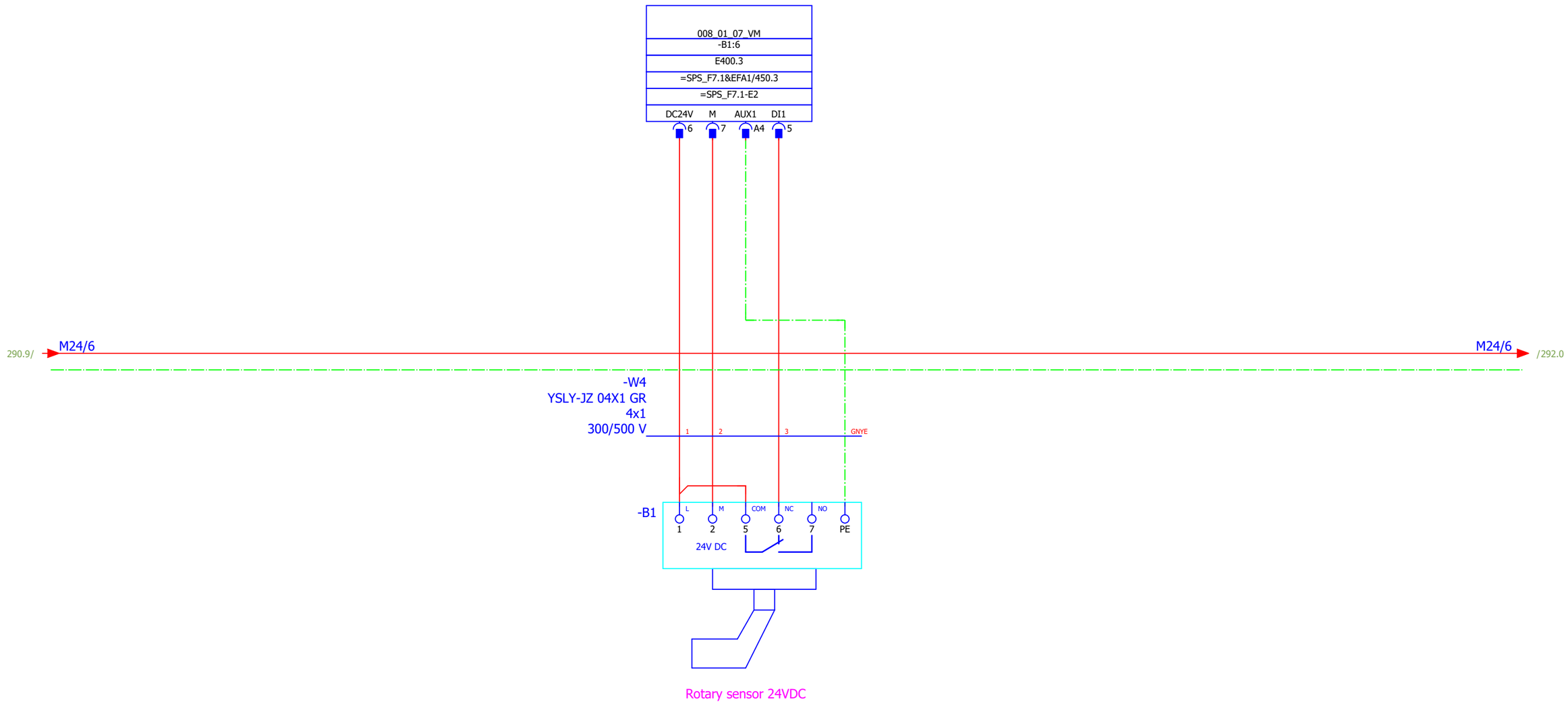

			Date	12.12.2019	Mixed feed plant Golden Poultry	BEYTEC ... your gateway to success	Full Silo 7		= 8.1	
			Ed.	willen					+ F27	
			Appr		field 7 external signals			1 : 1	Part II	Page 291
Modification	Date	Name	Original	V:\EPLAN\Projekte\Company\Replace\Beytec\2018\Feed Mill Alssad.elk	Replaced by					Page 605

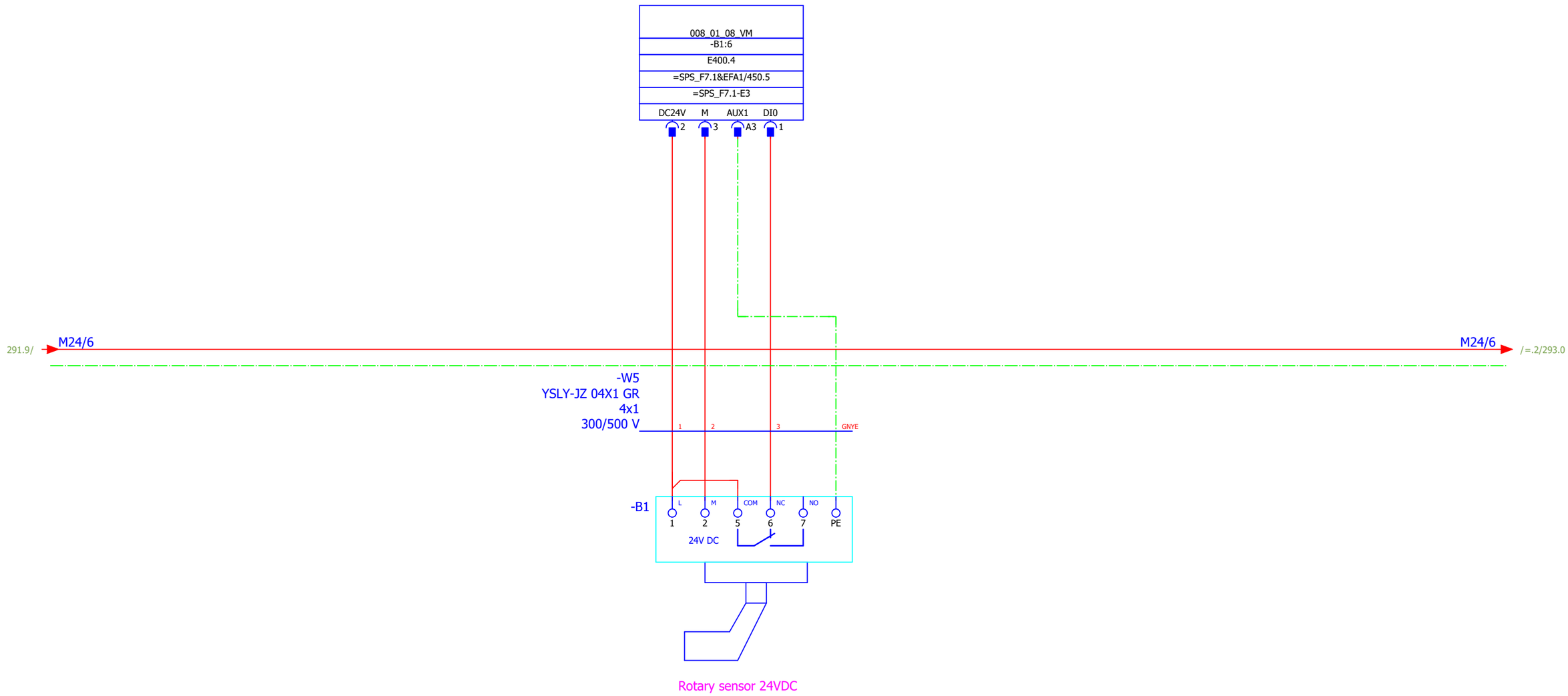

Rotary sensor 24VDC

			Date	12.12.2019	Mixed feed plant Golden Poultry	BEYTEC	Full Silo 8		= 8.1		
			Ed.	willen					+ F27		
			Appr		field 7 external signals			1 : 1	Part II	Page	292
Modification	Date	Name	Original	V:\EPLAN\Projekte\Company\Replace\Beytec\2018\Feed Mill Alssad.elk	Replaced by	... your gateway to success				Page	605

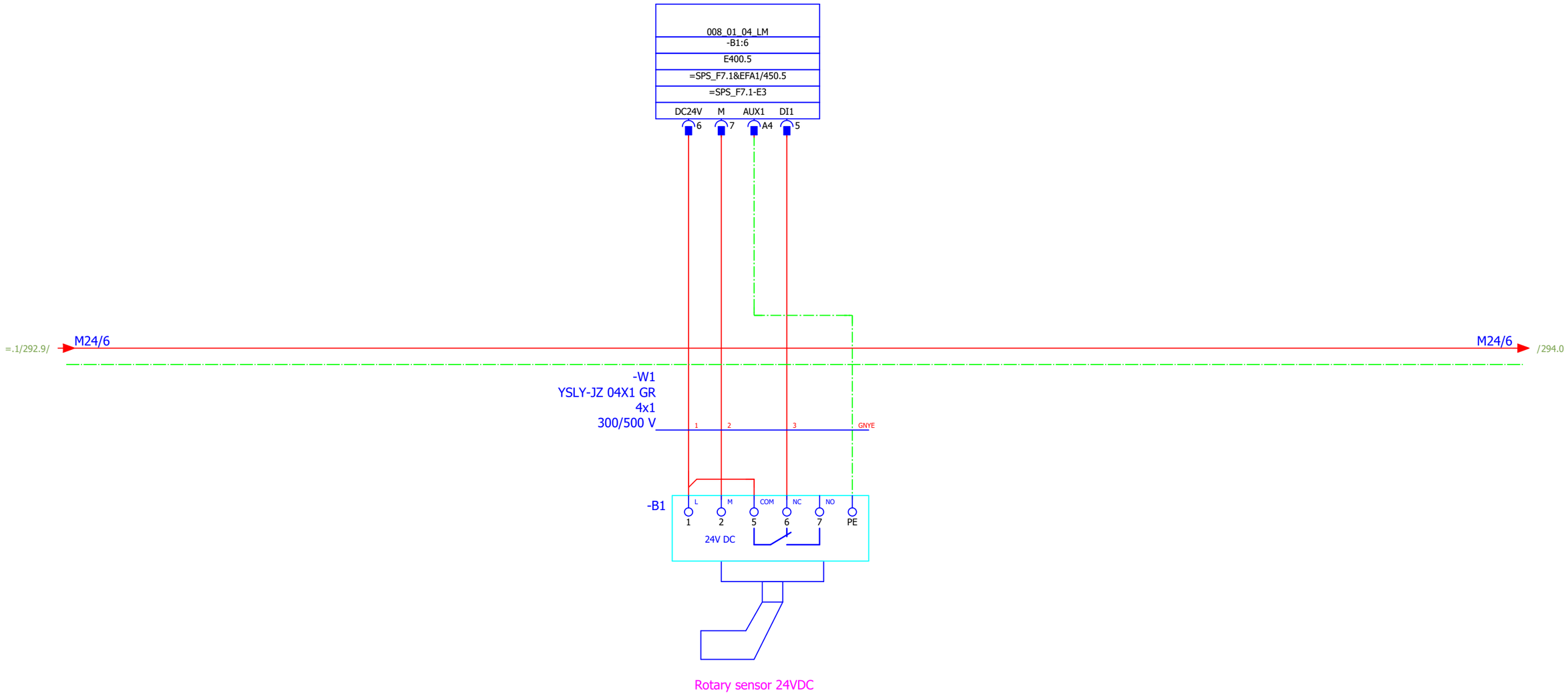
008_01_04_LM
-B1:6
E400.5
=SPS_F7.1&EFA1/450.5
=SPS_F7.1-E3
DC24V
M
AUX1
DI1
6
7
A4
5
=.1/292.9/
M24/6
M24/6
/294.0
-W1
YSLY-JZ 04X1 GR
4x1
300/500 V
1
2
3
GNYE
-B1
L
M
COM
NC
NO
1
2
5
6
7
PE
24V DC
Rotary sensor 24VDC

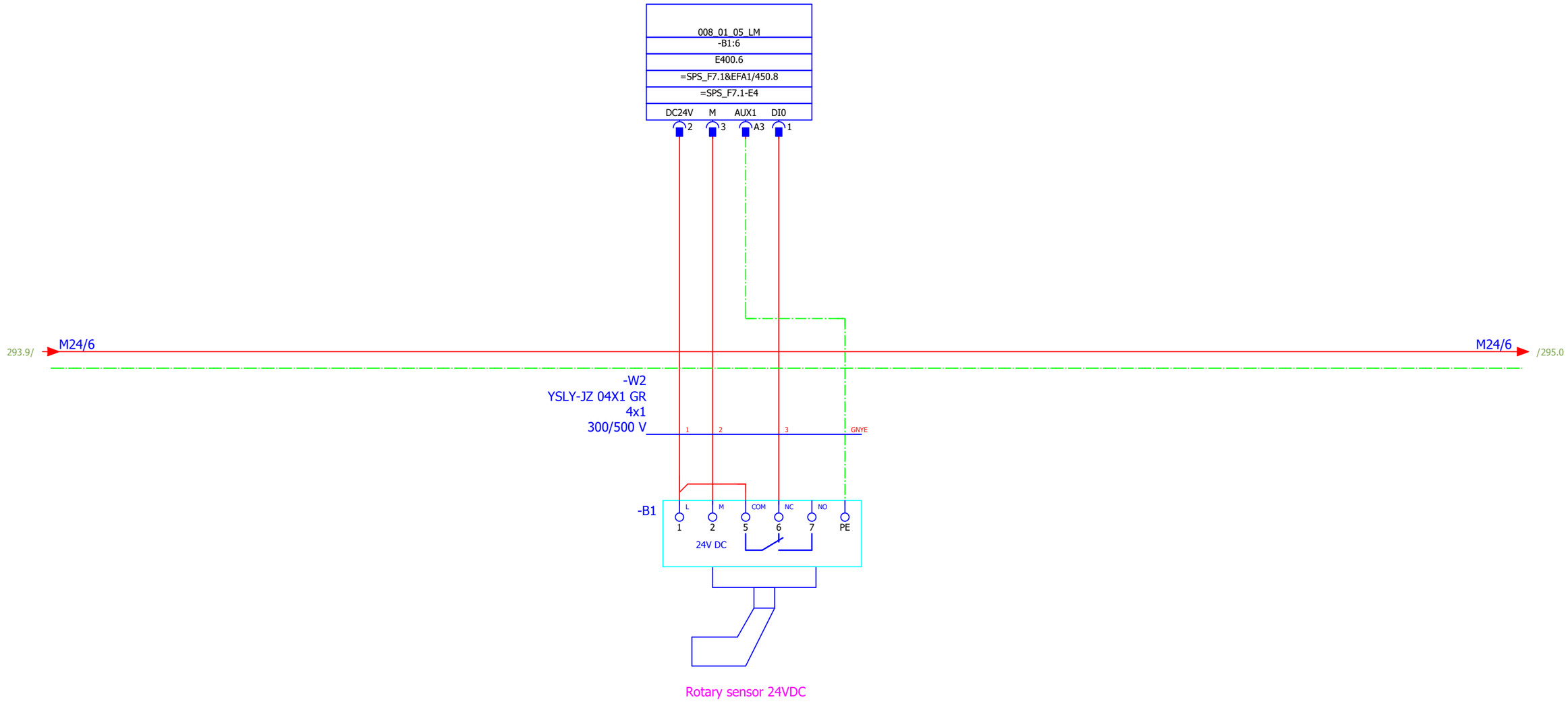

Rotary sensor 24VDC

			Date	12.12.2019	Mixed feed plant Golden Poultry	BEYTEC ... your gateway to success	Empty detector silo 5	= 8.2	
			Ed.	willen				+ F27	
			Appr		field 7 external signals			1 : 1 / Part II	Page 294
Modification	Date	Name	Original	V:\EPLAN\Projekte\Company\Replace\Beytec\2018\Feed Mill Alssad.elk	Replaced by				Page 605

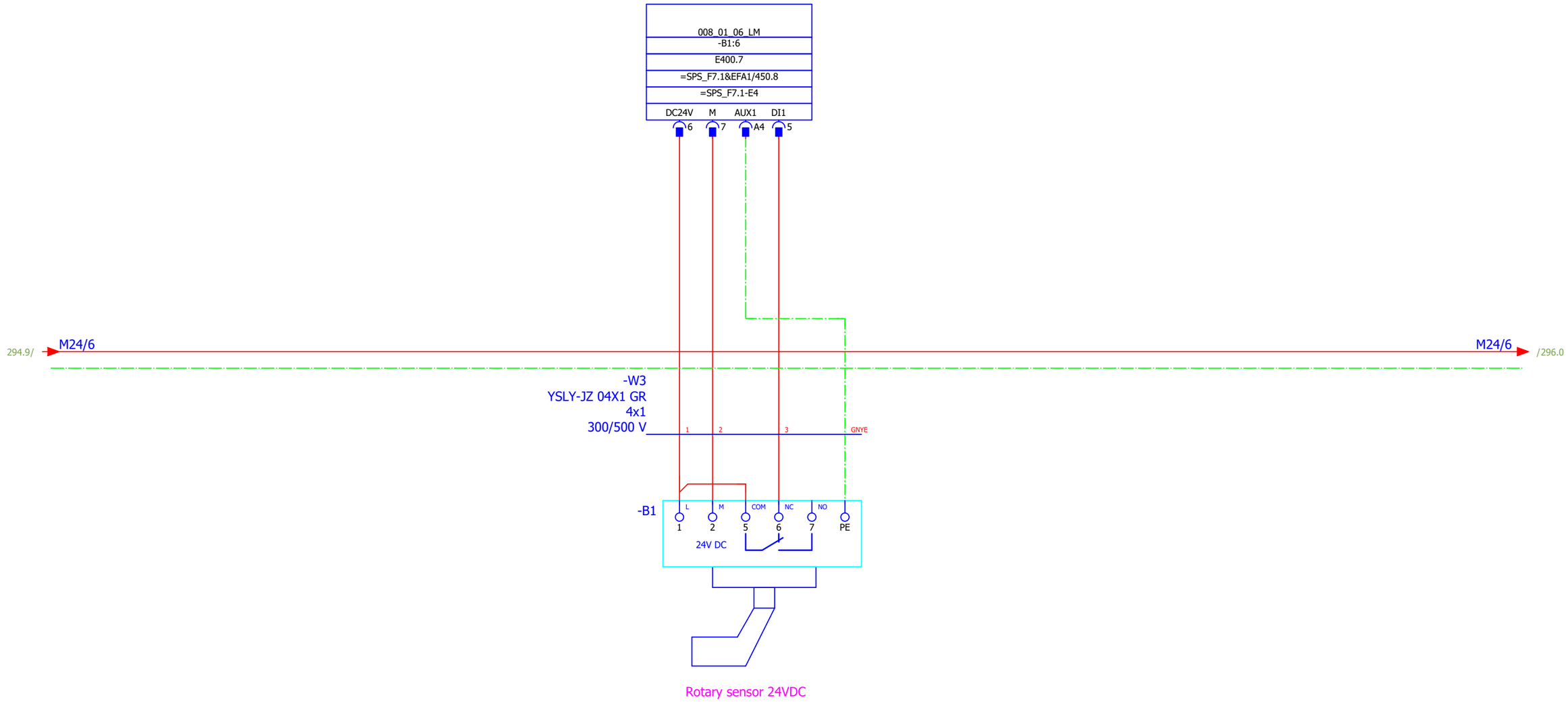

			Date	12.12.2019	Mixed feed plant Golden Poultry	BEYTEC ... your gateway to success	Empty detector silo 6	= 8.2	
			Ed.	willen				+ F27	
			Appr		field 7 external signals			1 : 1 / Part II	Page 295
Modification	Date	Name	Original	V:\EPLAN\Projekte\Company\Replace\Beytec\2018\Feed Mill Alssad.elk	Replaced by				Page 605

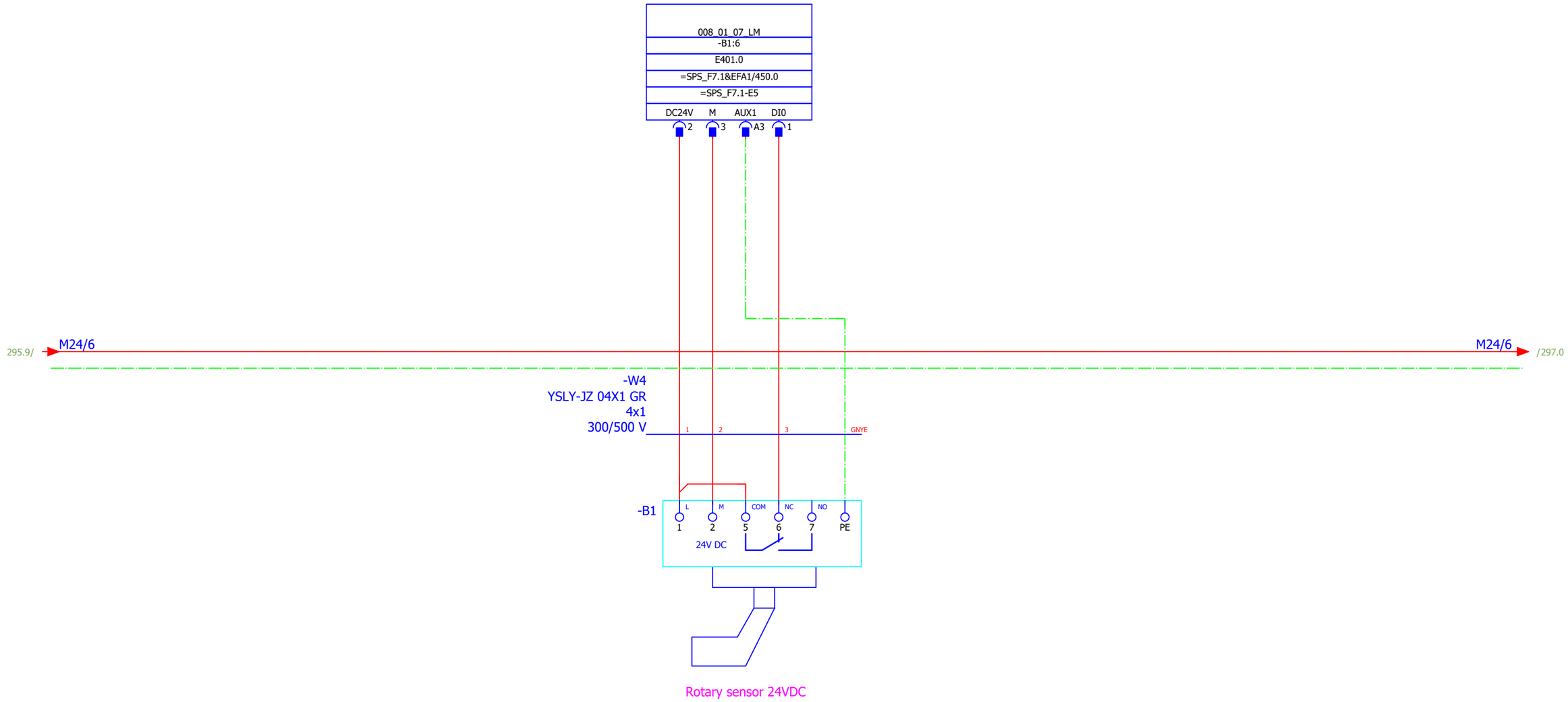

			Date	12.12.2019	Mixed feed plant Golden Poultry	BEYTEC ... your gateway to success	Empty detector silo 7		= 8.2	
			Ed.	willen					+ F27	
			Appr		field 7 external signals			1 : 1	Part II	Page 296
Modification	Date	Name	Original	V:\EPLAN\Projekte\Company\Replace\Beytec\2018\Feed Mill Alssad.elk	Replaced by					Page 605

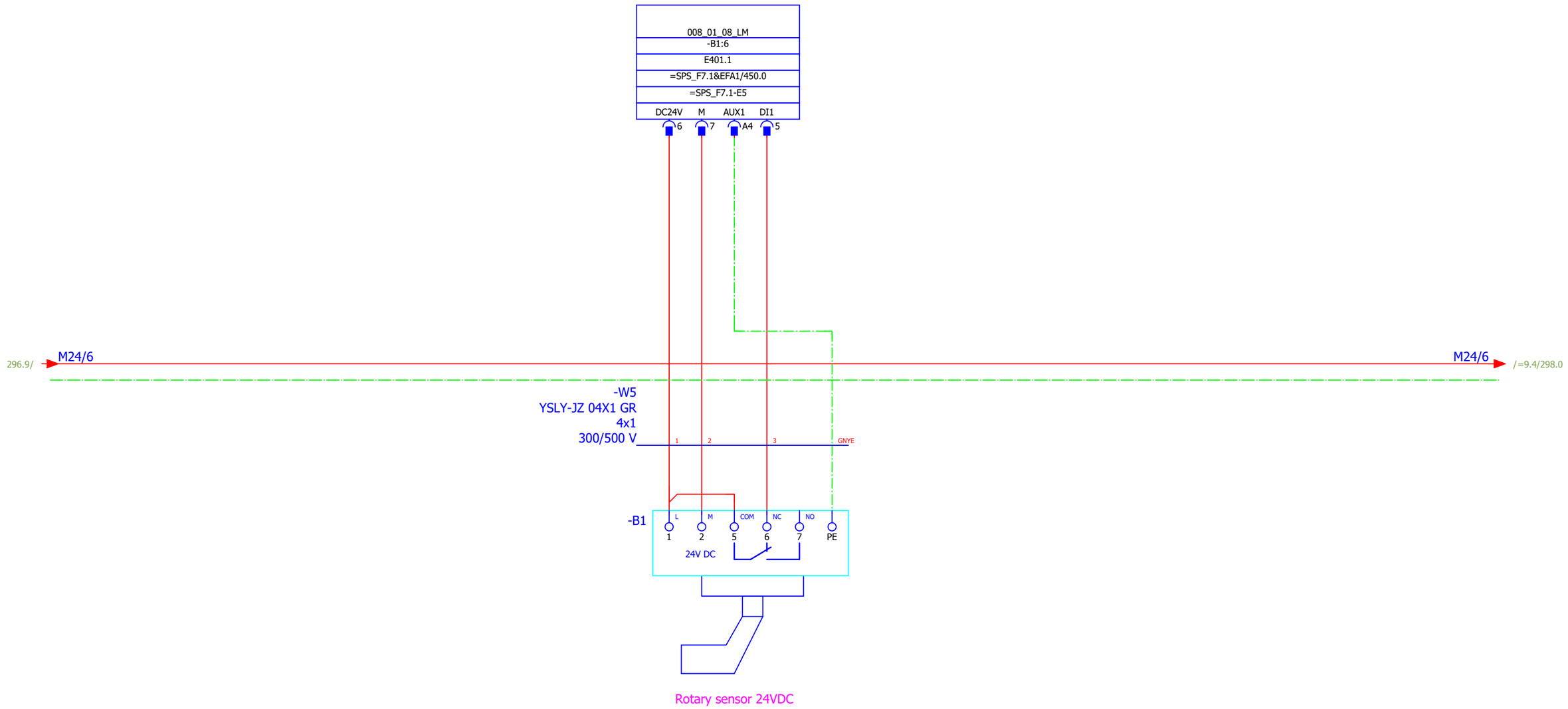

Rotary sensor 24VDC

=.10.4+F22/28

			Date	12.12.2019	Mixed feed plant Golden Poultry	BEYTEC	Empty detector silo 8	= 8.2	
			Ed.	willen		... your gateway to success		+ F27	
			Appr		field 7 external signals			1 : 1	Part II
Modification	Date	Name	Original	V:\EPLAN\Projekte\Company\Replace\Beytec\2018\Feed Mill Alssad.elk	Replaced by			Page 297	Page 605

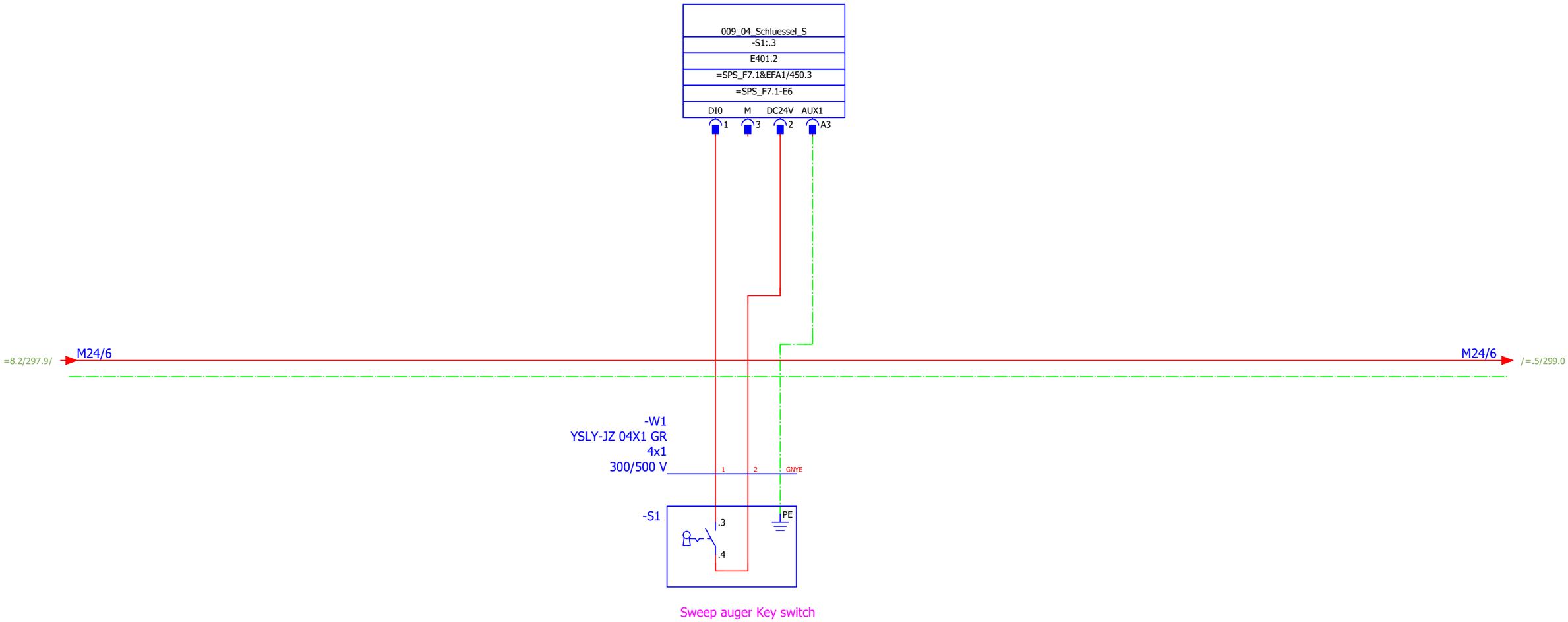

+F22/33

=.5+F22/34

			Date	12.12.2019	Mixed feed plant Golden Poultry	BEYTEC ... your gateway to success	Sweep auger	= 9.4	
			Ed.	willen				+ F27	
			Appr		field 7 external signals			1 : 1 / Part II	Page 298
Modification	Date	Name	Original	V:\EPLAN\Projekte\Company\Replace\Beytec\2018\Feed Mill Alssad.elk	Replaced by				Page 605

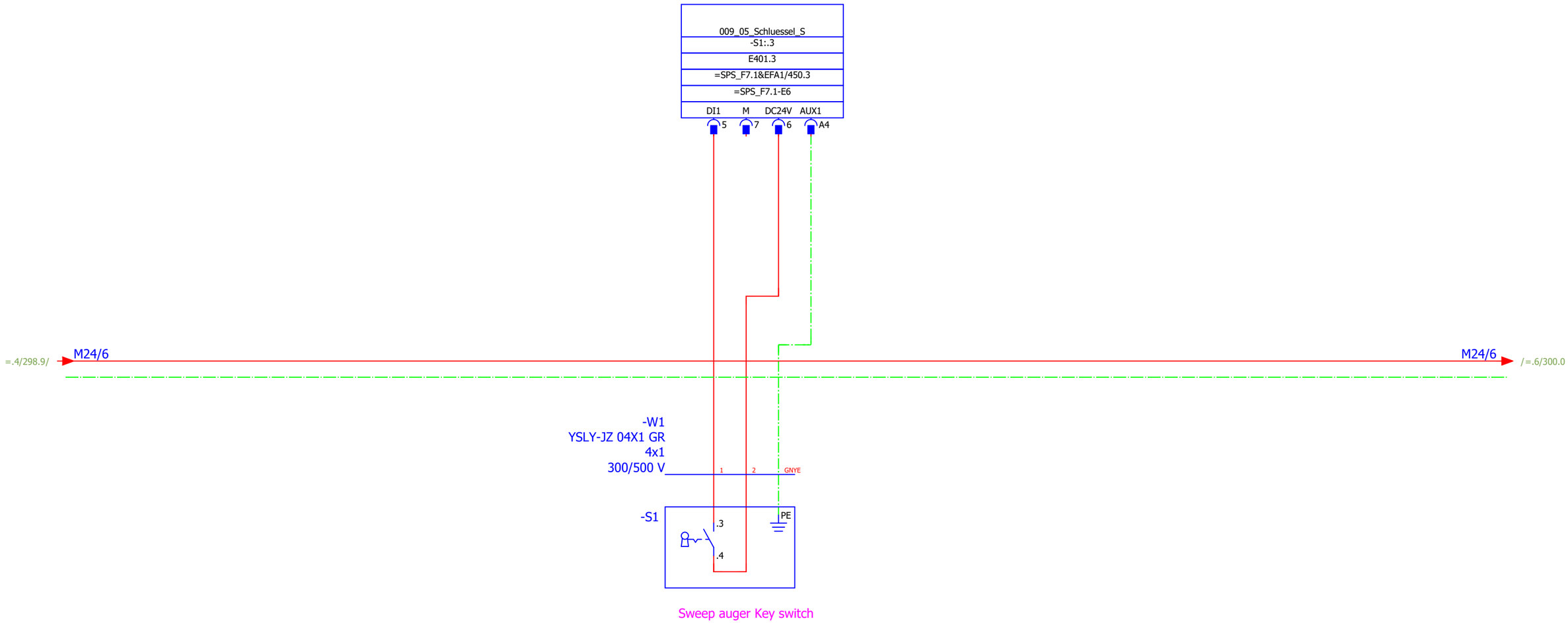

+F22/34

=.6+F22/35

			Date	12.12.2019	Mixed feed plant Golden Poultry	BEYTEC ... your gateway to success	Sweep auger	= 9.5	
			Ed.	willen				+ F27	
			Appr		field 7 external signals			1 : 1 / Part II	Page 299
Modification	Date	Name	Original	V:\EPLAN\Projekte\Company\Replace\Beytec\2018\Feed Mill Alssad.elk	Replaced by				Page 605

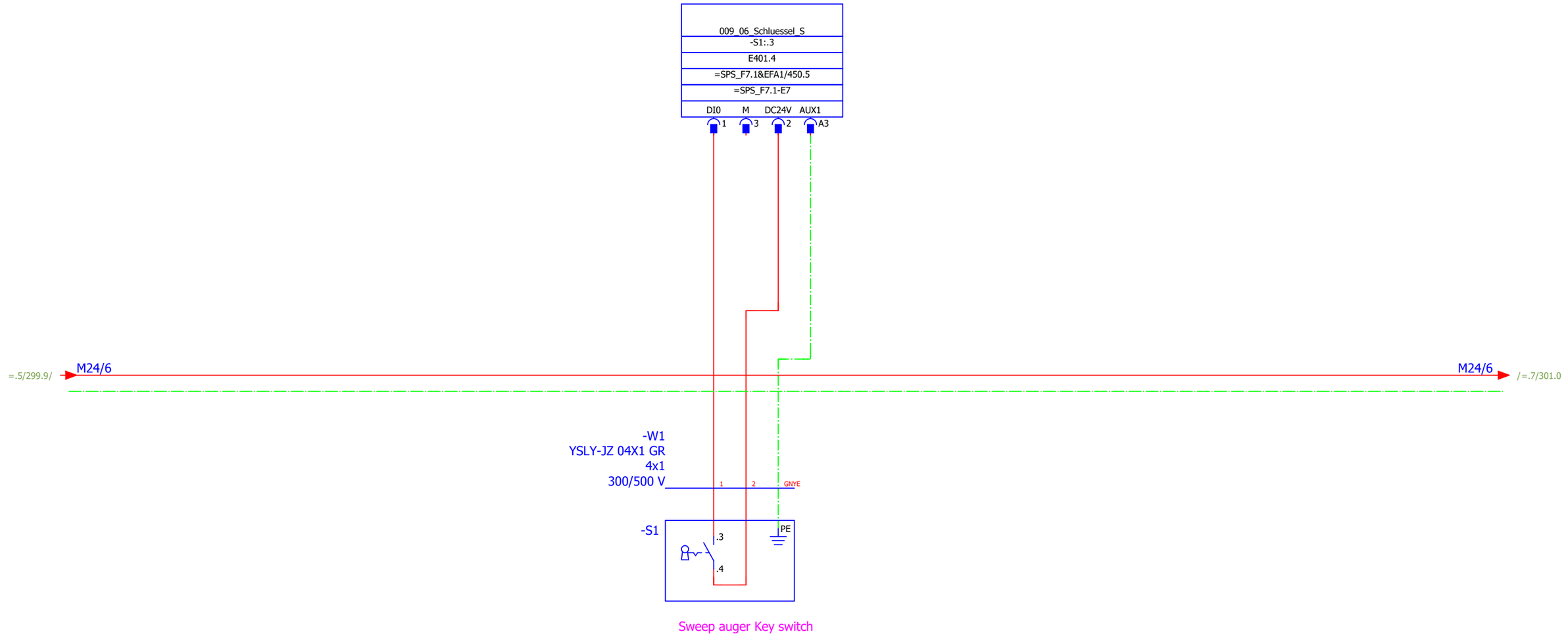
009_06_Schluessel_S
-S1:.3
E401.4
=SPS_F7.1&EFA1/450.5
=SPS_F7.1-E7
DI0
M
DC24V
AUX1
1
3
2
A3
=.5/299.9/
M24/6
M24/6
/=.7/301.0
-W1
YSLY-JZ 04X1 GR
4x1
300/500 V
1
2
GNYE
-S1
.3
.4
PE
Sweep auger Key switch

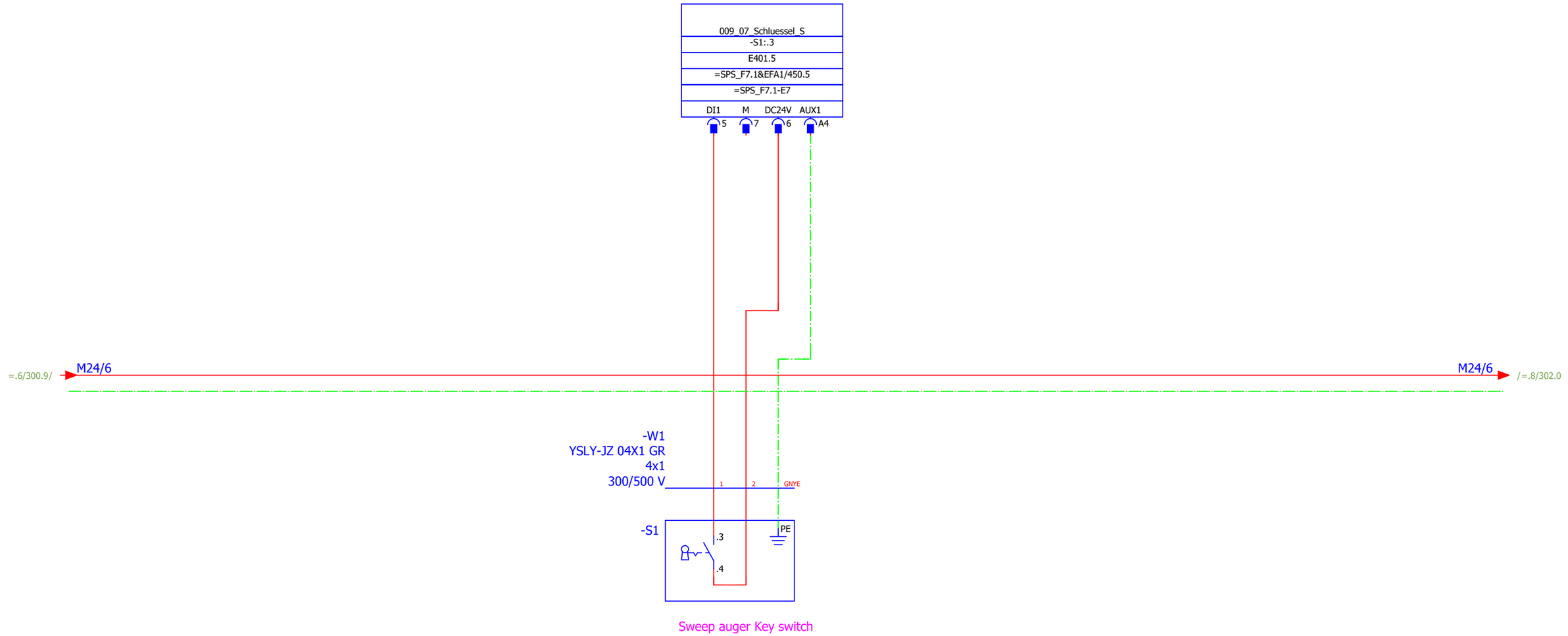

			Date	12.12.2019	Mixed feed plant Golden Poultry	BEYTEC ... your gateway to success	Sweep auger		= 9.7	
			Ed.	willen					+ F27	
			Appr		field 7 external signals			1 : 1	Part II	Page 301
Modification	Date	Name	Original	V:\EPLAN\Projekte\Company\Replace\Beytec\2018\Feed Mill Alssad.elk	Replaced by					Page 605

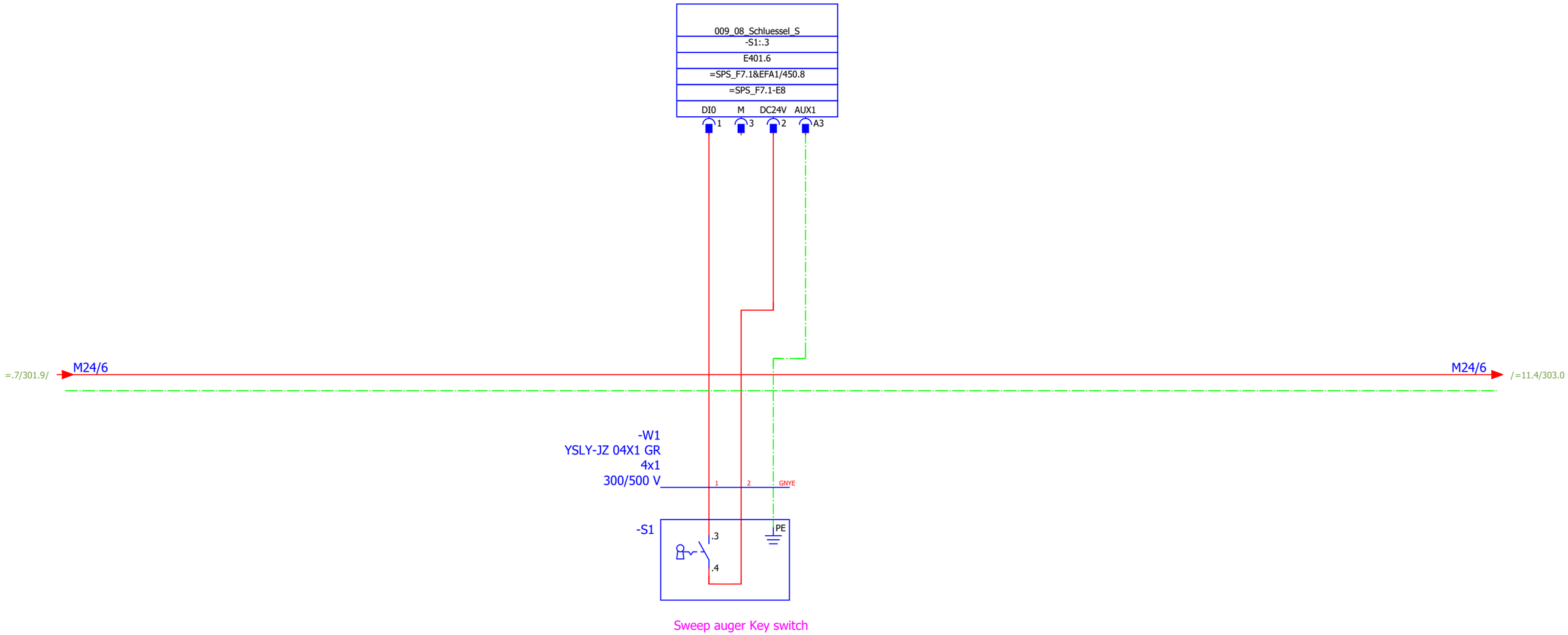

+F22/37

=10.2.4+F22/38

			Date	12.12.2019	Mixed feed plant Golden Poultry	BEYTEC ... your gateway to success	Sweep auger	= 9.8	
			Ed.	willen				+ F27	
			Appr		field 7 external signals			1 : 1 / Part II	Page 302
Modification	Date	Name	Original	V:\EPLAN\Projekte\Company\Replace\Beytec\2018\Feed Mill Alssad.elk	Replaced by				Page 605

Replace(Beytec)

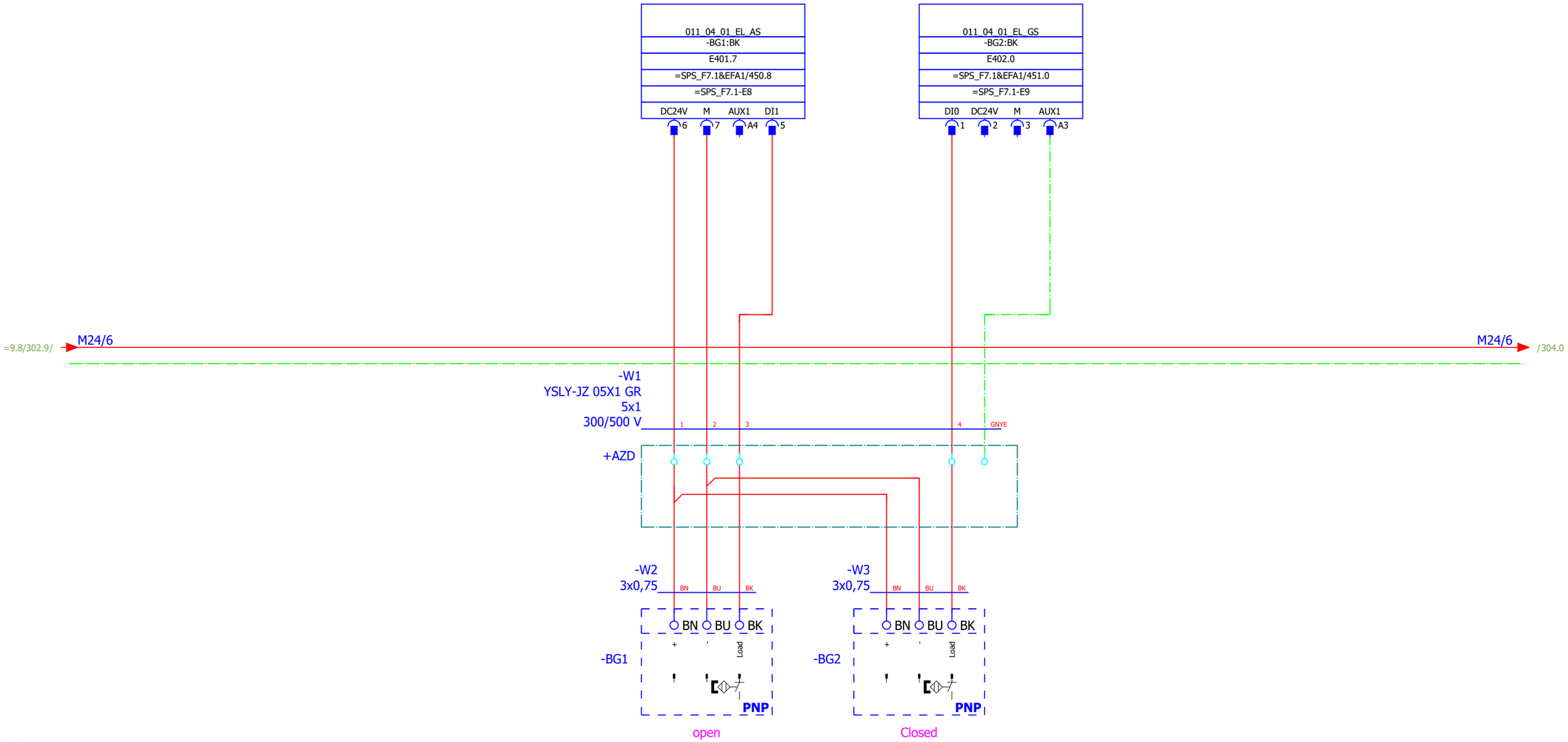

=10.2.8+F22/42

304

			Date	12.12.2019	Mixed feed plant Golden Poultry	BEYTEC ... your gateway to success	limit switch hand gate 1	= 11.4	
			Ed.	willen				+ F27	
			Appr		field 7 external signals			1 : 1 Part II	Page 303
Modification	Date	Name	Original	V:\EPLAN\Projekte\Company\Replace\Beytec\2018\Feed Mill Alssad.elk	Replaced by				Page 605

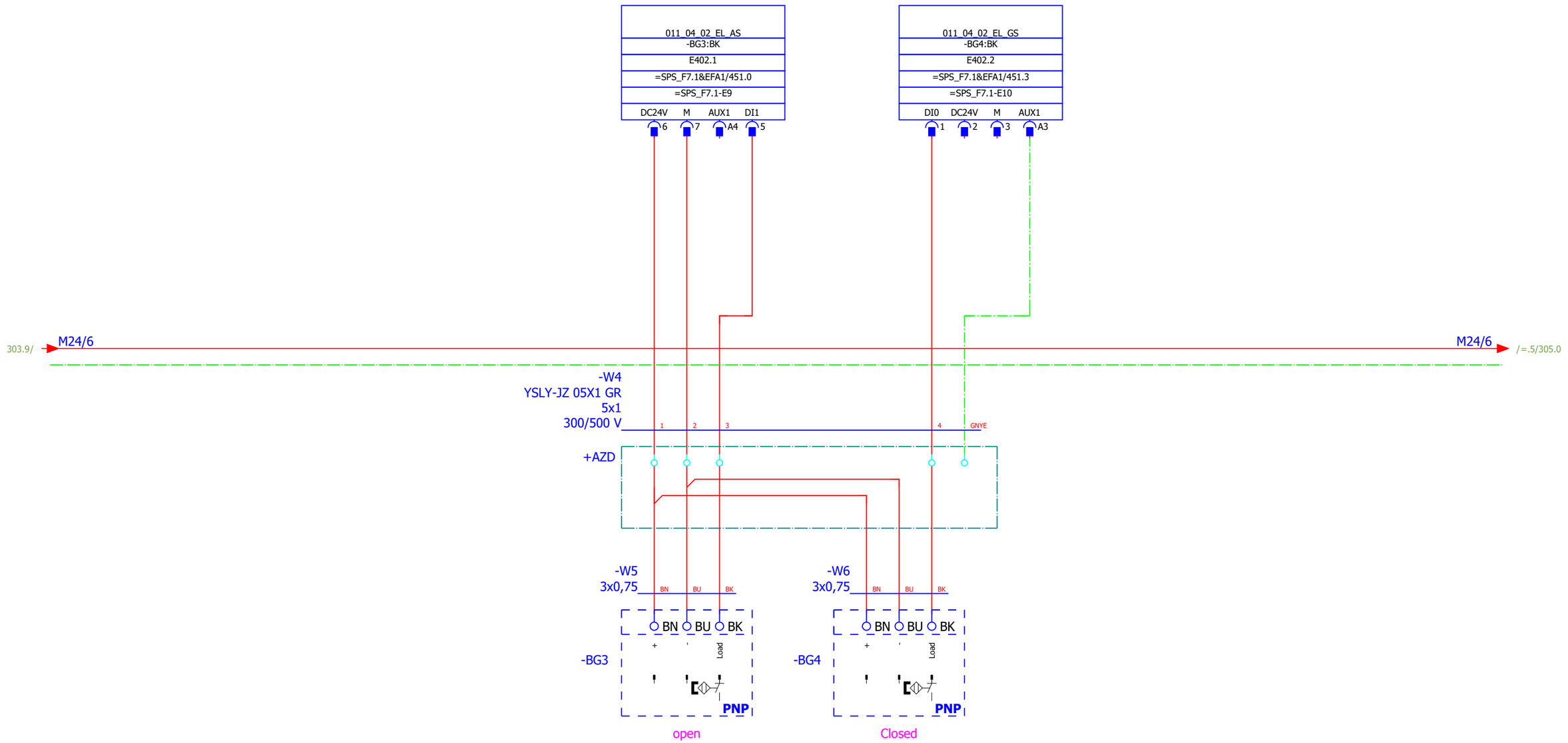

303

=.5/305

			Date	12.12.2019	Mixed feed plant Golden Poultry	BEYTEC ... your gateway to success	limit switch hand gate 2	= 11.4	
			Ed.	willen				+ F27	
			Appr		field 7 external signals			1 : 1	Part II
Modification	Date	Name	Original	V:\EPLAN\Projekte\Company\Replace\Beytec\2018\Feed Mill Alssad.elk	Replaced by			Page 304	Page 605

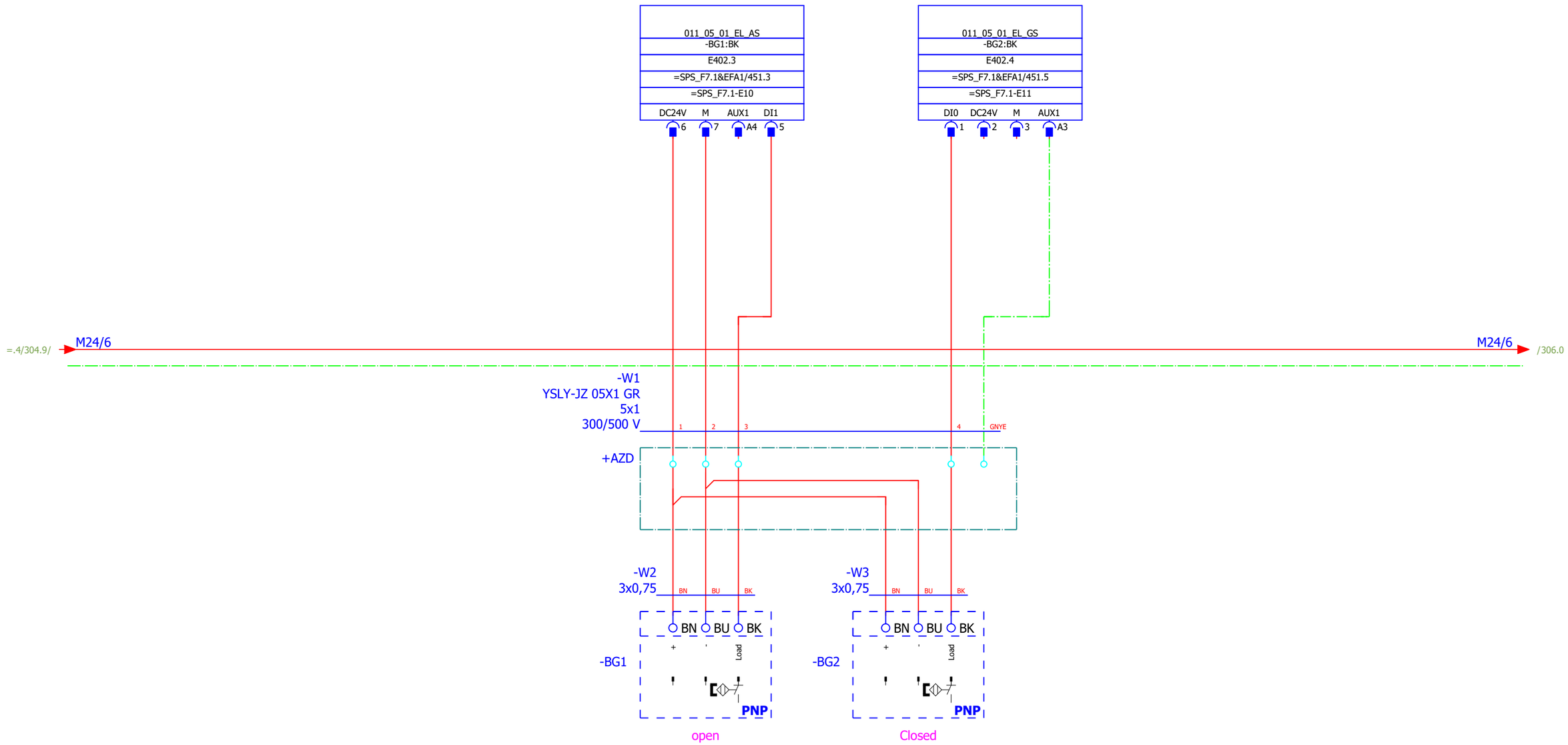

			Date	12.12.2019	Mixed feed plant Golden Poultry	BEYTEC	limit switch hand gate 1			= 11.5	
			Ed.	willen		... your gateway to success				+ F27	
			Appr		field 7 external signals			1 : 1	Part II	Page 305	
Modification	Date	Name	Original	V:\EPLAN\Projekte\Company\Replace\Beytec\2018\Feed Mill Alssad.elk	Replaced by					Page 605	

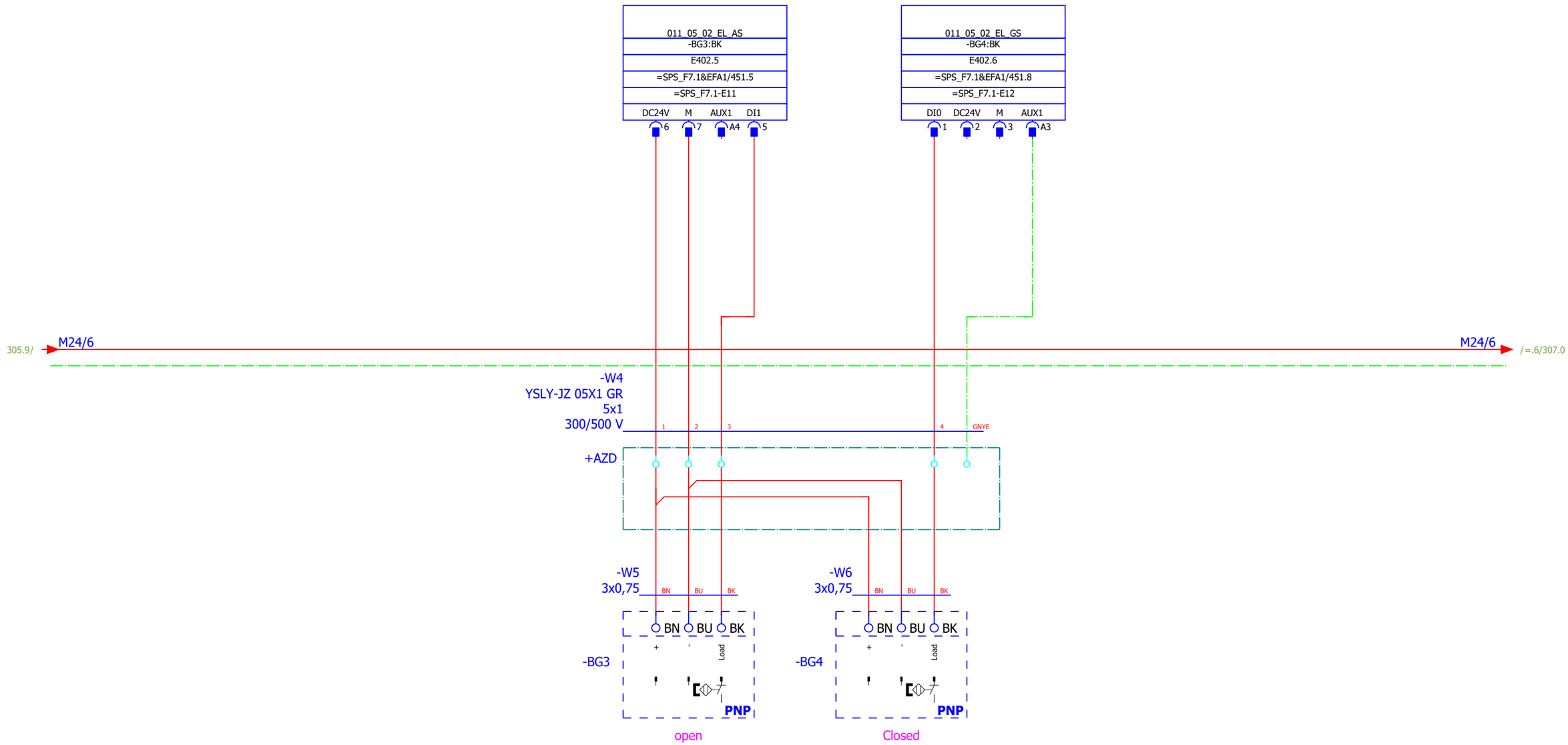

			Date	12.12.2019	Mixed feed plant Golden Poultry	BEYTEC ... your gateway to success	limit switch hand gate 2	= 11.5	
			Ed.	willen				+ F27	
			Appr		field 7 external signals			1 : 1 / Part II	Page 306
Modification	Date	Name	Original	V:\EPLAN\Projekte\Company\Replace\Beytec\2018\Feed Mill Alssad.elk	Replaced by				Page 605

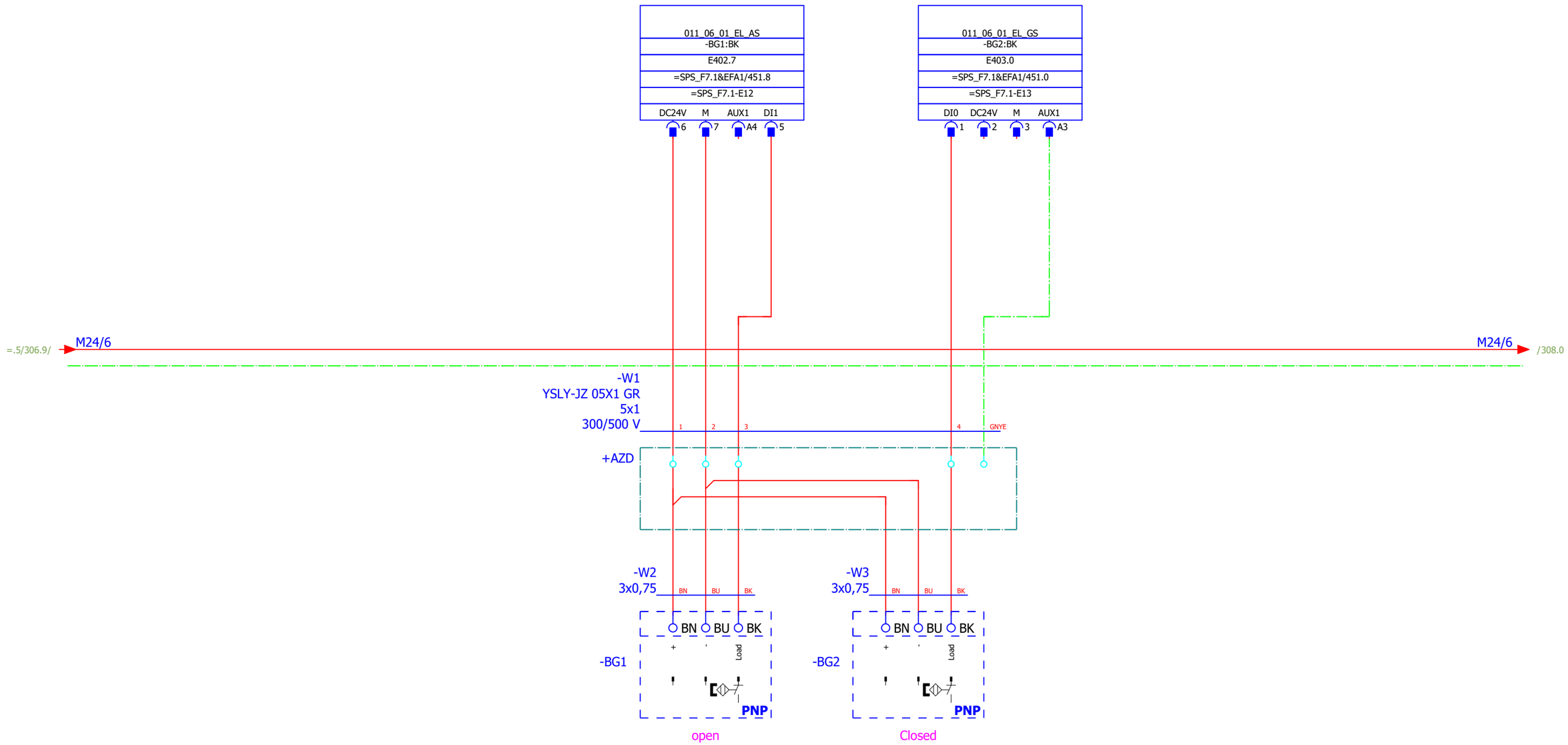

			Date	12.12.2019	Mixed feed plant Golden Poultry	BEYTEC	limit switch hand gate 1		= 11.6	
			Ed.	willen		... your gateway to success			+ F27	
			Appr		field 7 external signals			1 : 1	Part II	Page 307
Modification	Date	Name	Original	V:\EPLAN\Projekte\Company\Replace\Beytec\2018\Feed Mill Alssad.elk	Replaced by					Page 605

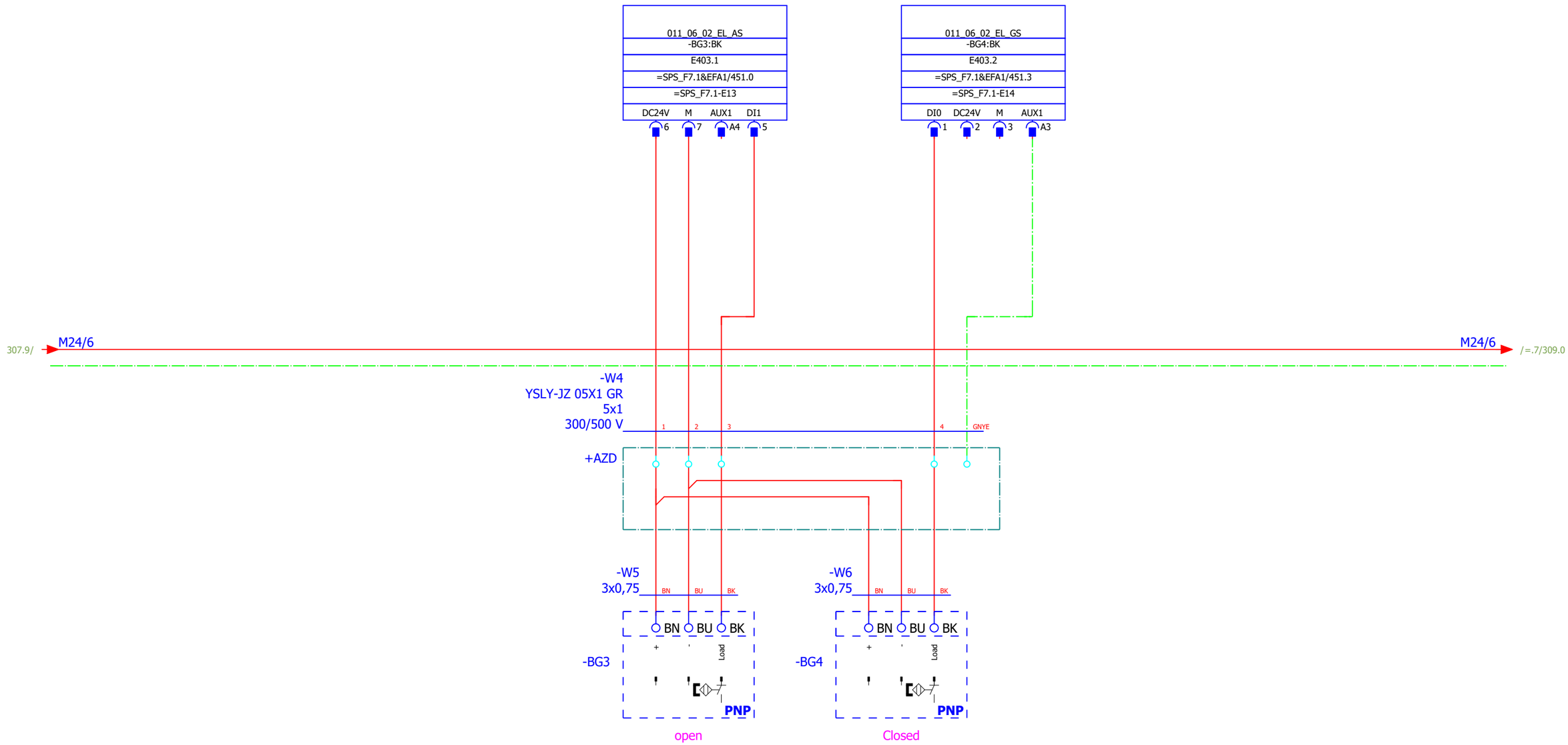

			Date	12.12.2019	Mixed feed plant Golden Poultry	BEYTEC ... your gateway to success	limit switch hand gate 2	= 11.6	
			Ed.	willen				+ F27	
			Appr		field 7 external signals			1 : 1	Part II
Modification	Date	Name	Original	V:\EPLAN\Projekte\Company\Replace\Beytec\2018\Feed Mill Alssad.elk	Replaced by			Page 308	Page 605

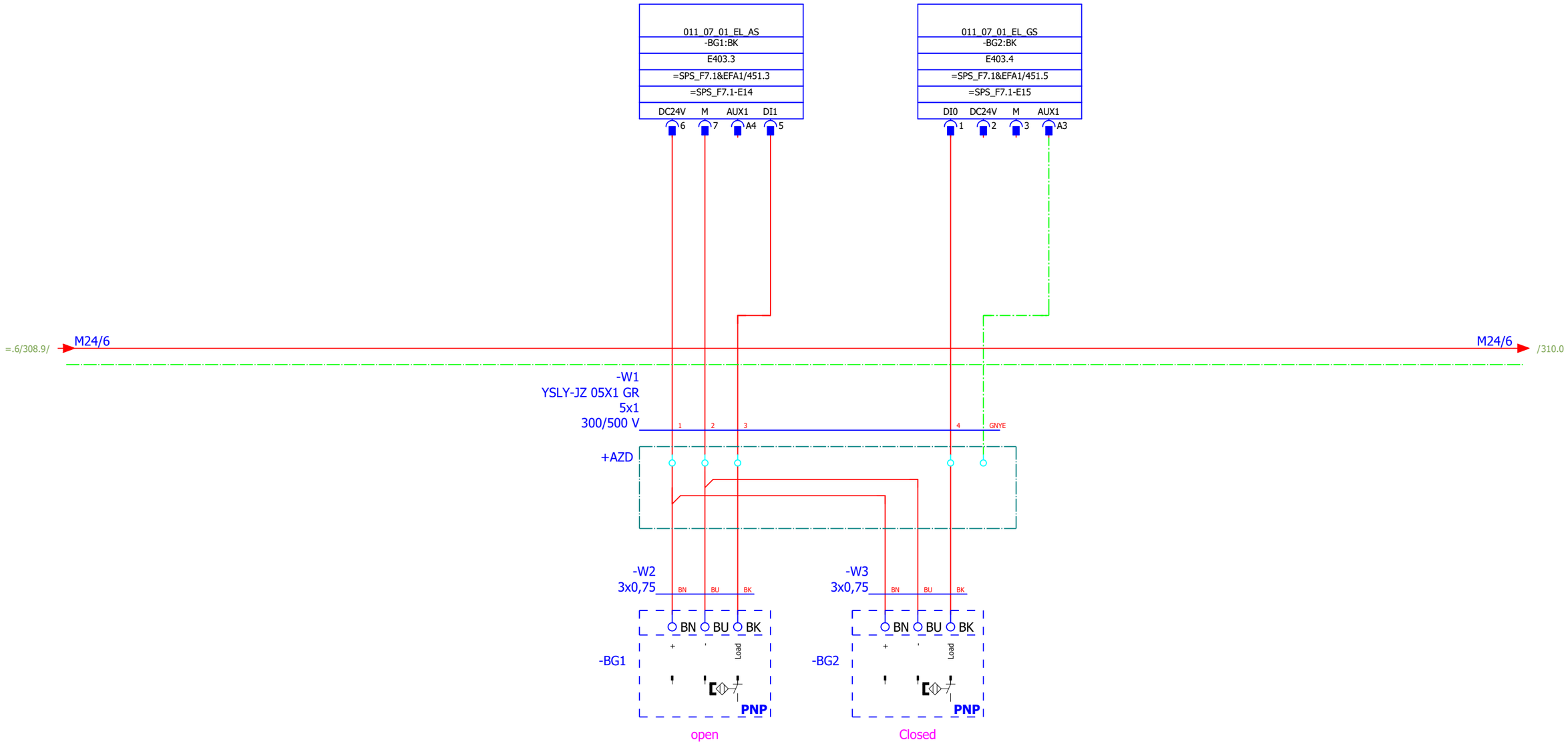

			Date	12.12.2019	Mixed feed plant Golden Poultry	BEYTEC	limit switch hand gate 1			= 11.7	
			Ed.	willen		... your gateway to success				+ F27	
			Appr		field 7 external signals			1 : 1	Part II	Page 309	
Modification	Date	Name	Original	V:\EPLAN\Projekte\Company\Replace\Beytec\2018\Feed Mill Alssad.elk	Replaced by					Page 605	

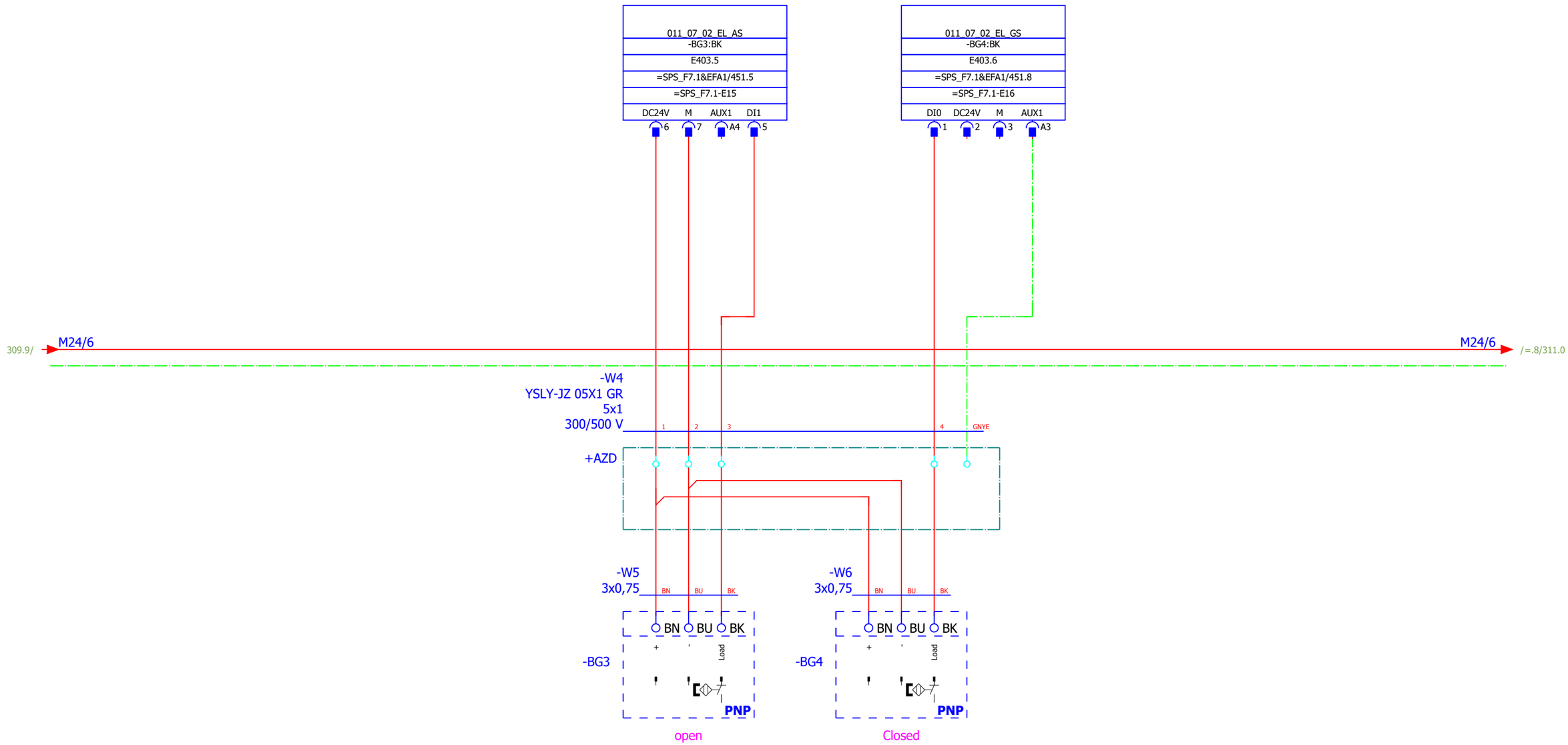

309

=.8/311

			Date	12.12.2019	Mixed feed plant Golden Poultry	BEYTEC ... your gateway to success	limit switch hand gate 2	= 11.7	
			Ed.	willen				+ F27	
			Appr		field 7 external signals			1 : 1 / Part II	Page 310
Modification	Date	Name	Original	V:\EPLAN\Projekte\Company\Replace\Beytec\2018\Feed Mill Alssad.elk	Replaced by				Page 605

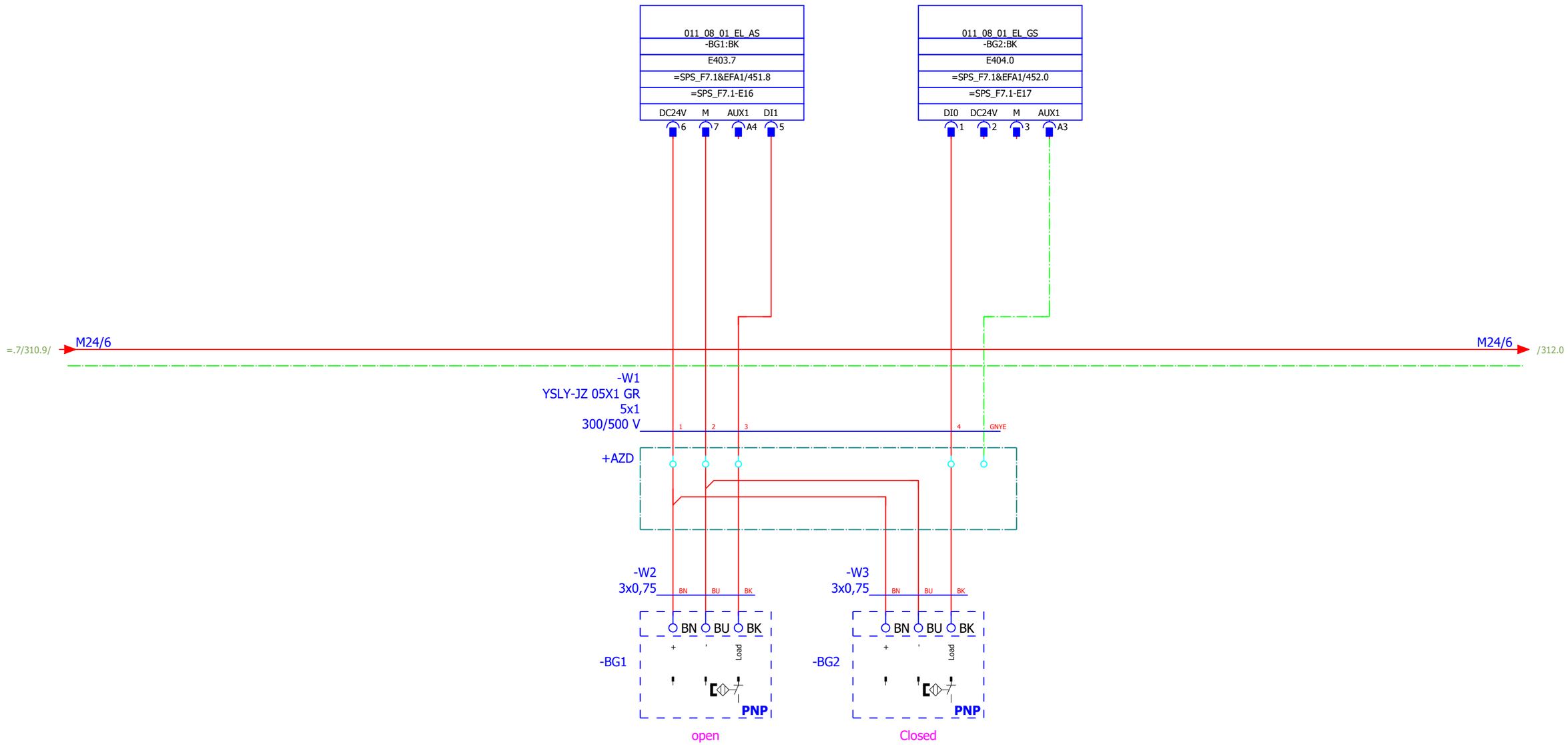

			Date	12.12.2019	Mixed feed plant Golden Poultry	BEYTEC ... your gateway to success	limit switch hand gate 1		= 11.8	
			Ed.	willen					+ F27	
			Appr		field 7 external signals			1 : 1	Part II	Page 311
Modification	Date	Name	Original	V:\EPLAN\Projekte\Company\Replace\Beytec\2018\Feed Mill Alssad.elk	Replaced by					Page 605

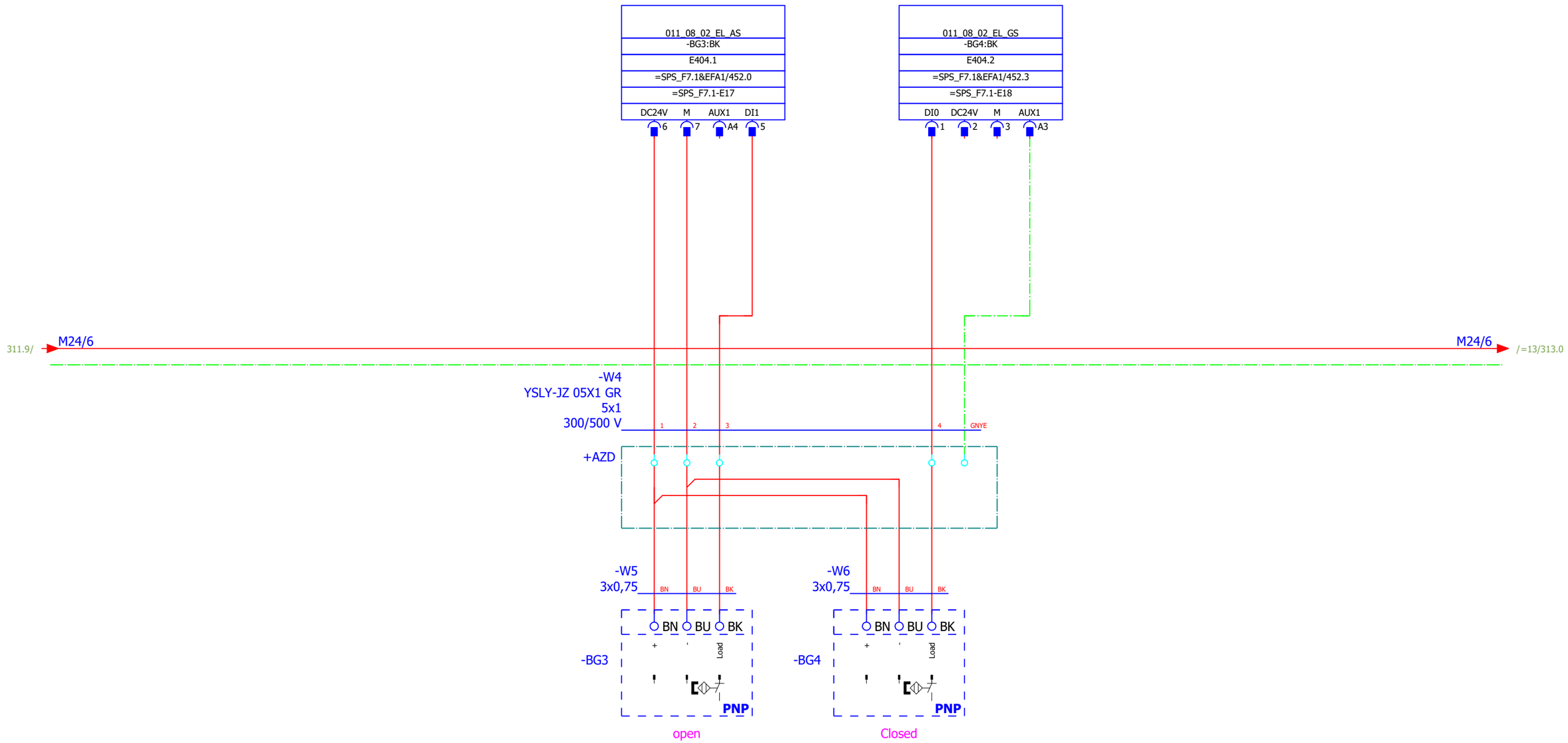

311

=13+F22/43

			Date	12.12.2019	Mixed feed plant Golden Poultry	BEYTEC ... your gateway to success	limit switch hand gate 2	= 11.8	
			Ed.	willen				+ F27	
			Appr		field 7 external signals			1 : 1 Part II	Page 312
Modification	Date	Name	Original	V:\EPLAN\Projekte\Company\Replace\Beytec\2018\Feed Mill Alssad.elk	Replaced by				Page 605

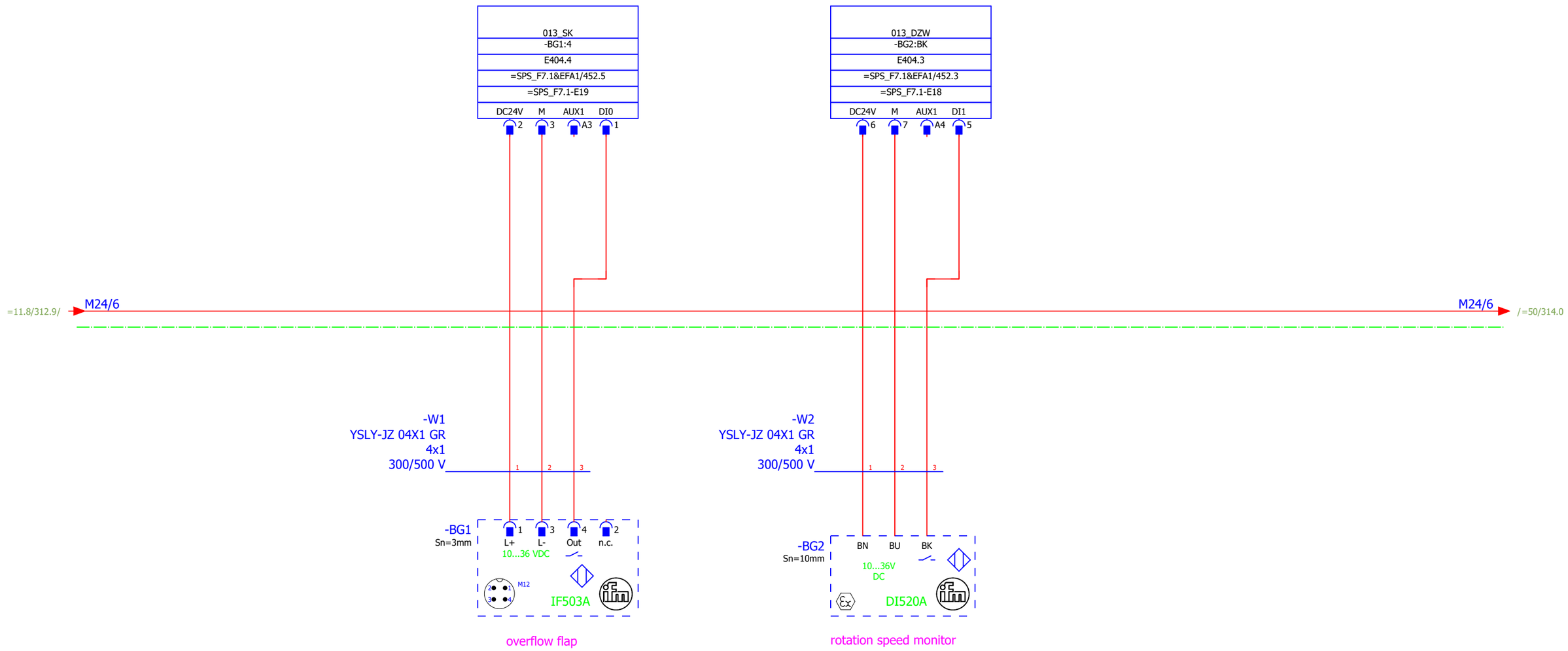

+F22/43

=50+F22/44

			Date	12.12.2019	Mixed feed plant Golden Poultry	BEYTEC ... your gateway to success	overflow flap & rotation speed monitor	= 13	
			Ed.	willen				+ F27	
			Appr		field 7 external signals		1 : 1	Part II	Page 313
Modification	Date	Name	Original	V:\EPLAN\Projekte\Company\Replace\Beytec\2018\Feed Mill Alssad.elk	Replaced by				Page 605

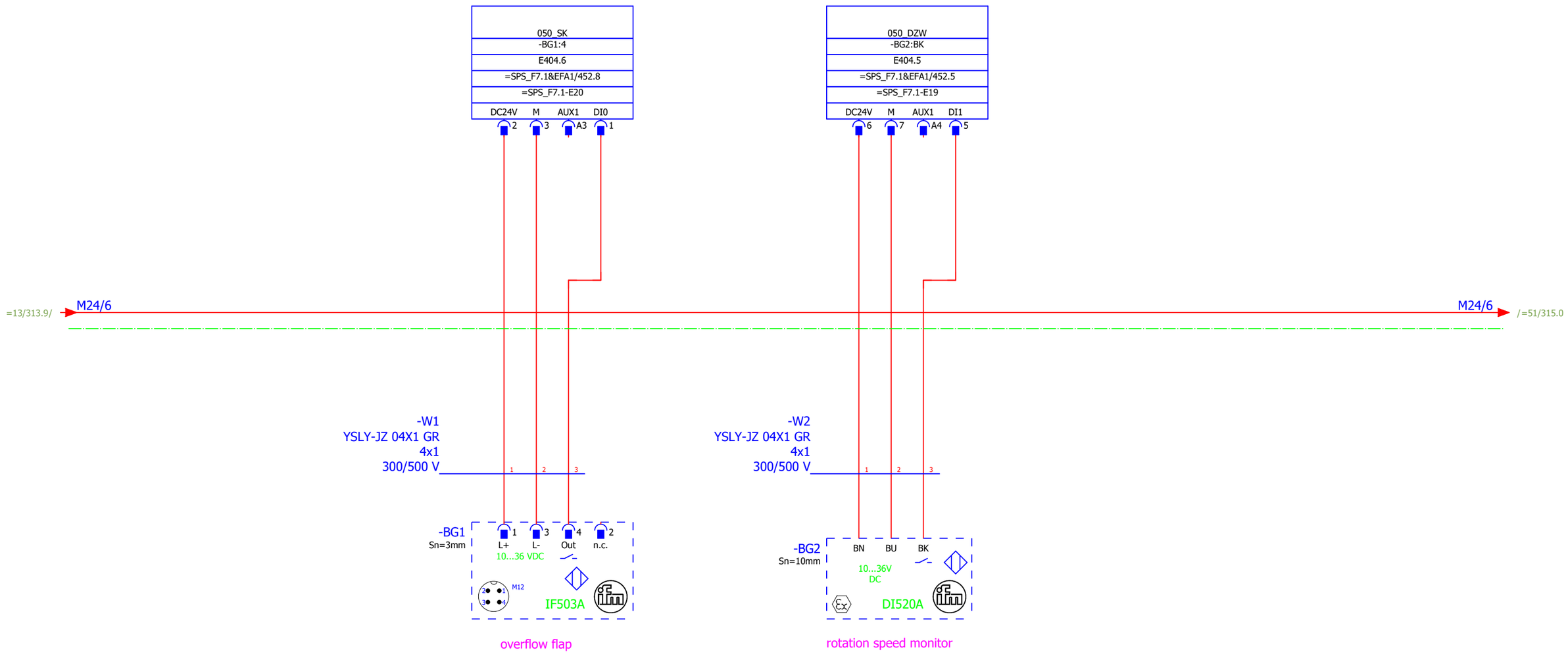

+F22/45

=51+F22/46

			Date	12.12.2019	Mixed feed plant Golden Poultry	BEYTEC ... your gateway to success	overflow flap & rotation speed monitor		= 50
			Ed.	willen					+ F27
			Appr		field 7 external signals			1 : 1	Part II
Modification	Date	Name	Original	V:\EPLAN\Projekte\Company\Replace\Beytec\2018\Feed Mill Alssad.elk		Replaced by			

Page 314

Page 605

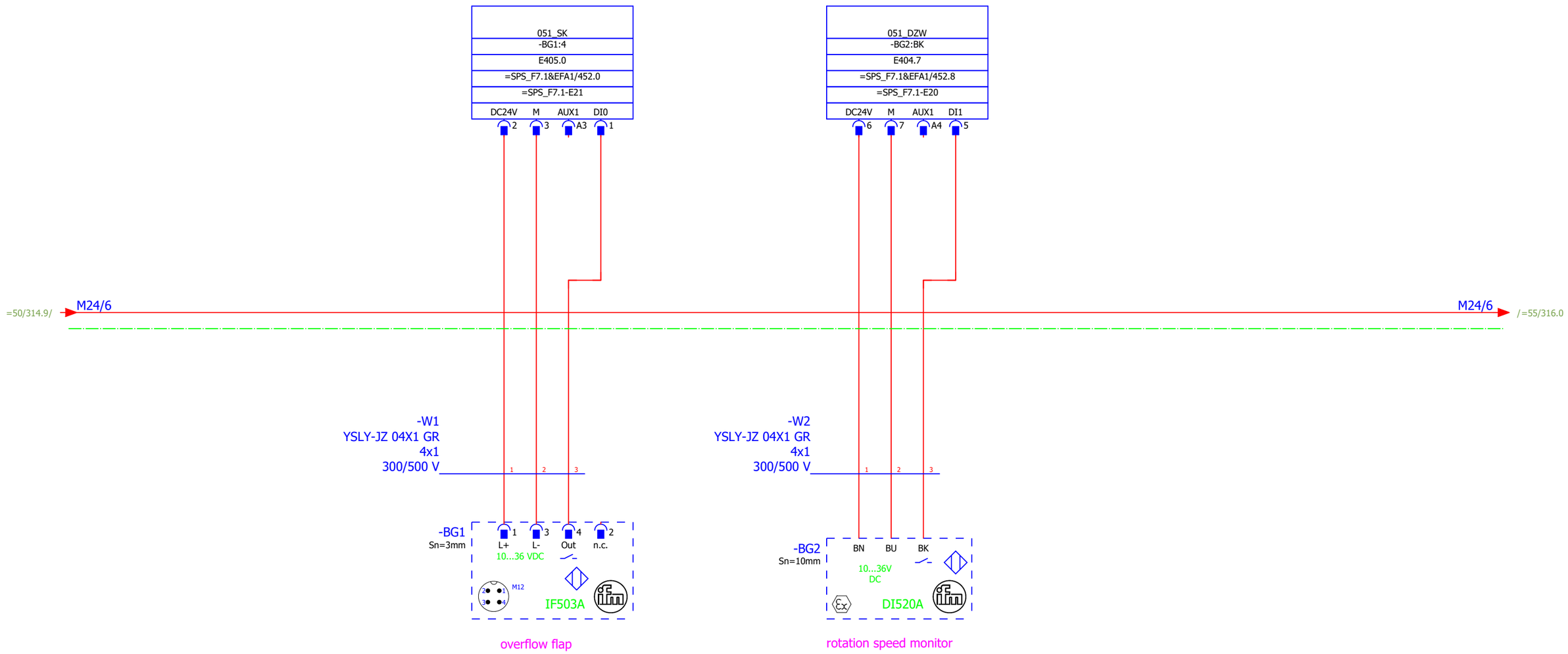

+F22/47

=.1.1+F22/48

			Date	12.12.2019	Mixed feed plant Golden Poultry	BEYTEC ... your gateway to success	overflow flap & rotation speed monitor	= 51	
			Ed.	willen				+ F27	
			Appr		field 7 external signals		1 : 1	Part II	Page 315
Modification	Date	Name	Original	V:\EPLAN\Projekte\Company\Replace\Beytec\2018\Feed Mill Alssad.elk	Replaced by				Page 605

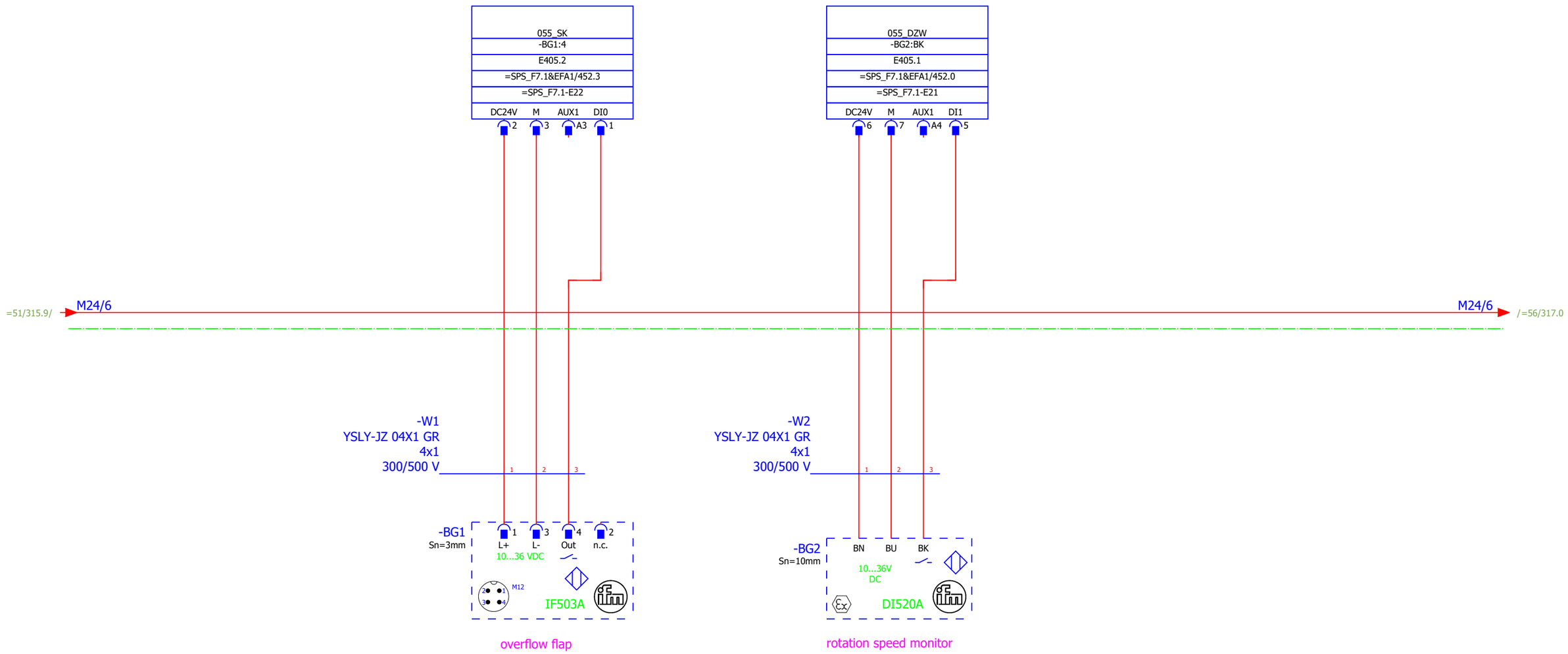

+F22/52

=56+F22/53

			Date	12.12.2019	Mixed feed plant Golden Poultry	BEYTEC ... your gateway to success	overflow flap & rotation speed monitor	= 55	
			Ed.	willen				+ F27	
			Appr		field 7 external signals		1 : 1	Part II	Page 316
Modification	Date	Name	Original	V:\EPLAN\Projekte\Company\Replace\Beytec\2018\Feed Mill Alssad.elk	Replaced by				Page 605

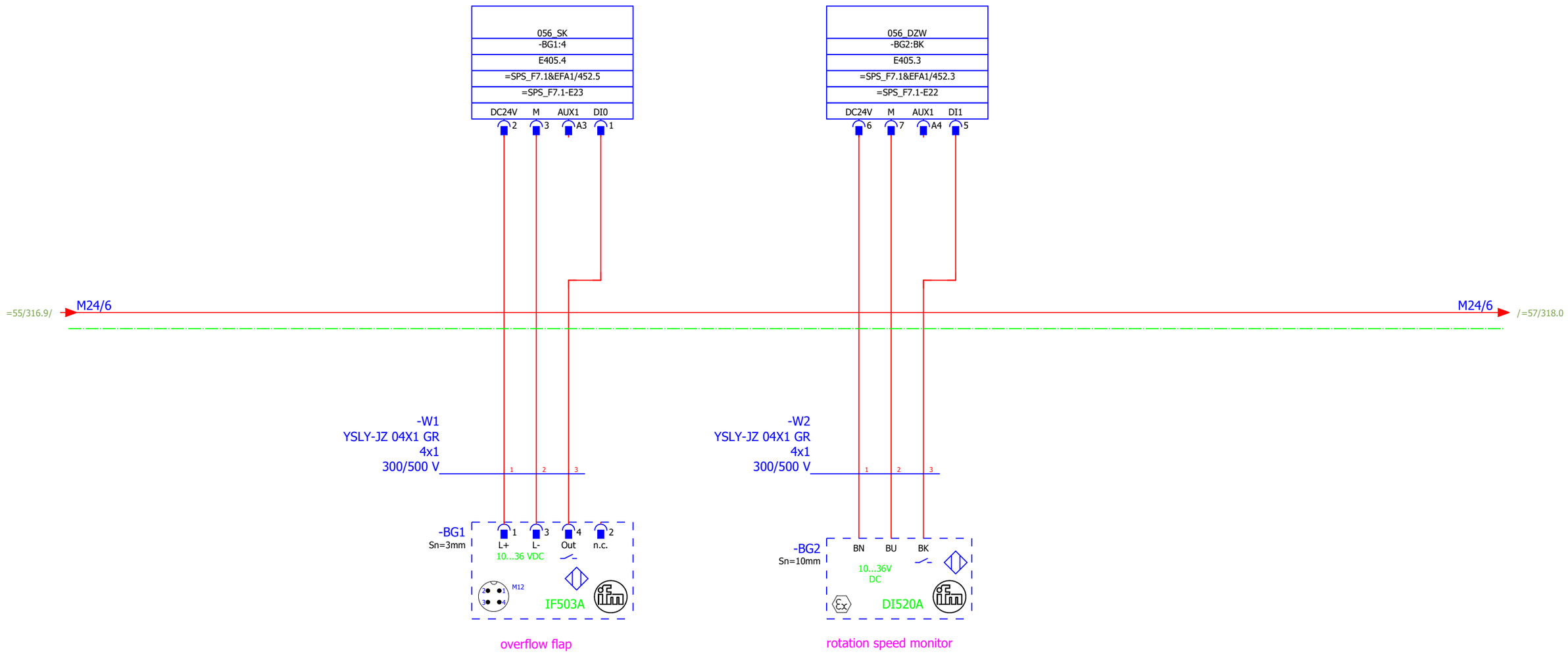

+F22/54

=57+F23/74

			Date	12.12.2019	Mixed feed plant Golden Poultry	BEYTEC ... your gateway to success	overflow flap & rotation speed monitor	= 56	
			Ed.	willen				+ F27	
			Appr		field 7 external signals			1 : 1 Part II	Page 317
Modification	Date	Name	Original	V:\EPLAN\Projekte\Company\Replace\Beytec\2018\Feed Mill Alssad.elk	Replaced by				Page 605

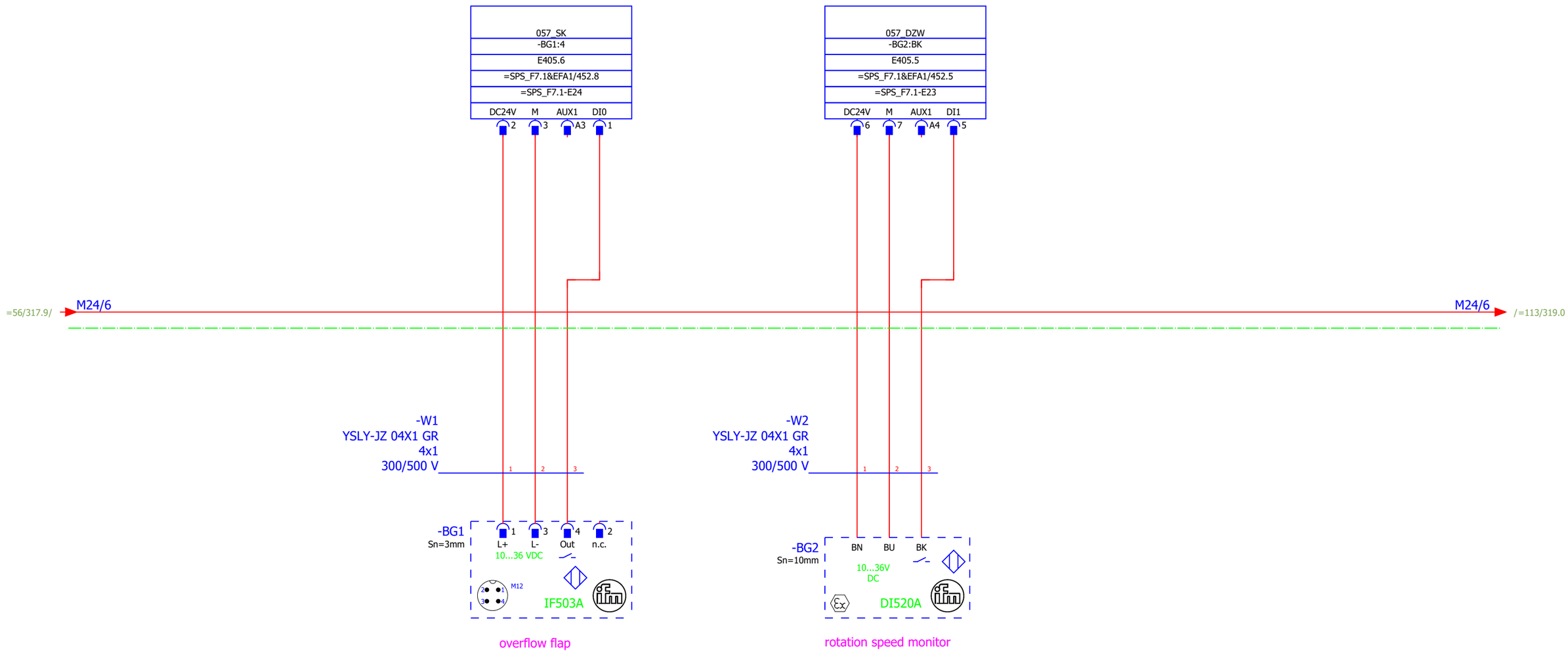

+F23/74

=.1+F22/55

			Date	12.12.2019	Mixed feed plant Golden Poultry	BEYTEC ... your gateway to success	overflow flap & rotation speed monitor	= 57	
			Ed.	willen				+ F27	
			Appr		field 7 external signals			1 : 1 Part II	Page 318
Modification	Date	Name	Original	V:\EPLAN\Projekte\Company\Replace\Beytec\2018\Feed Mill Alssad.elk	Replaced by				Page 605

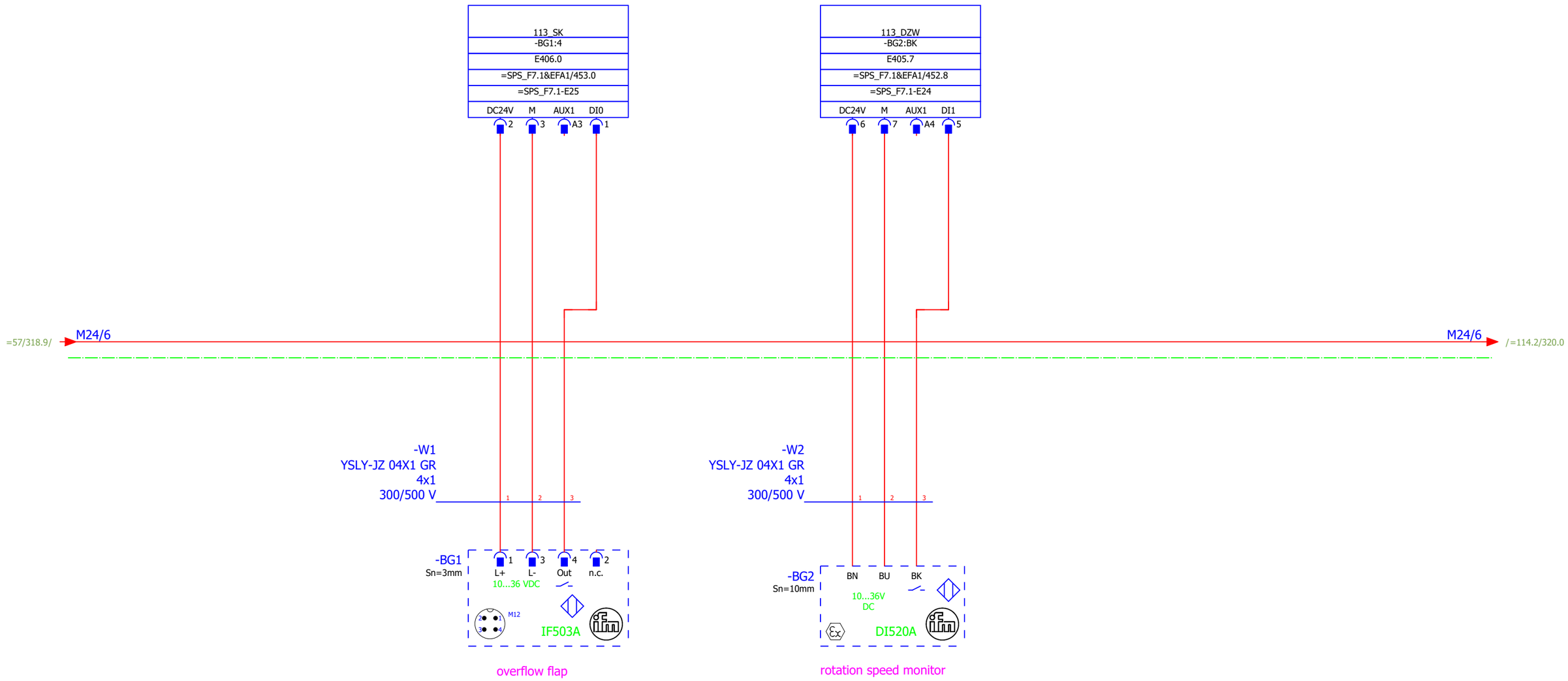

+F23/76

=114.2/320

			Date	12.12.2019	Mixed feed plant Golden Poultry	BEYTEC ... your gateway to success	overflow flap & rotation speed monitor	= 113	
			Ed.	willen				+ F27	
			Appr		field 7 external signals			1 : 1 / Part II	Page 319
Modification	Date	Name	Original	V:\EPLAN\Projekte\Company\Replace\Beytec\2018\Feed Mill Alssad.elk	Replaced by				Page 605

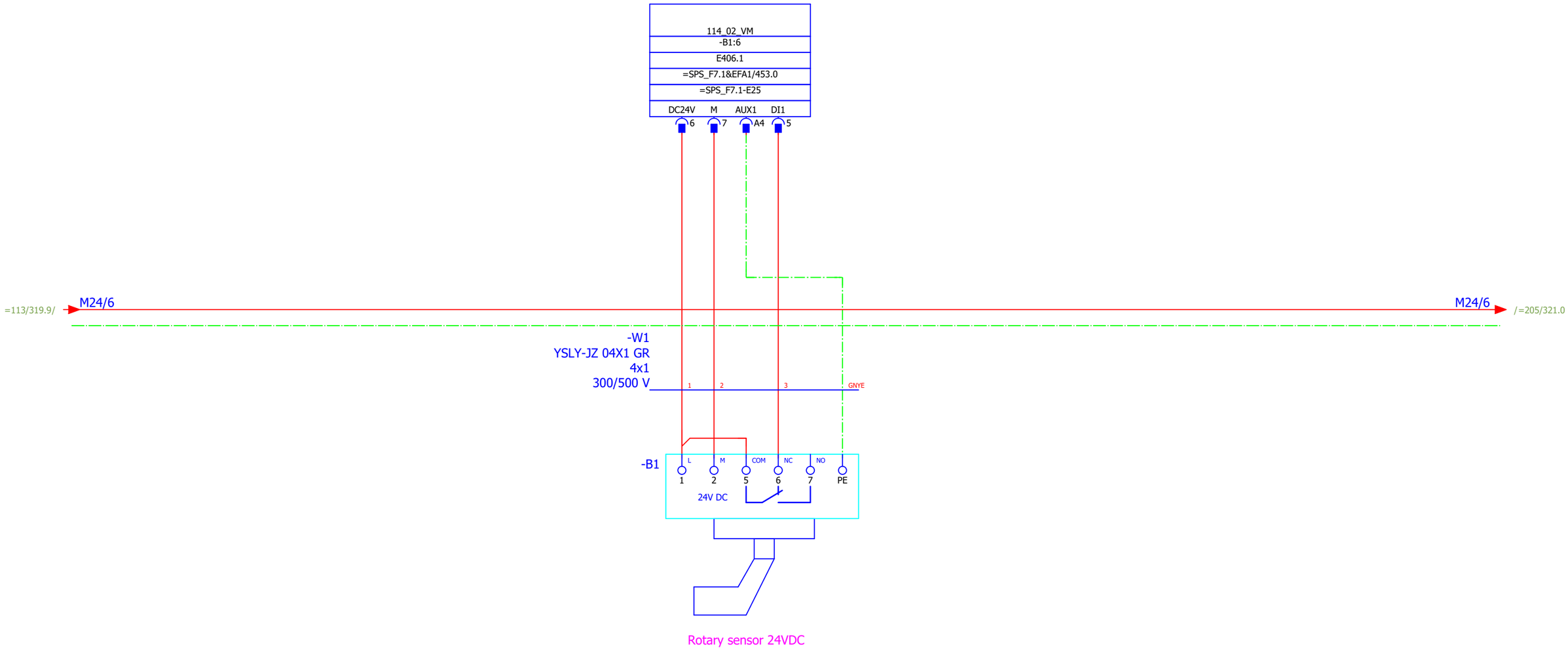

Rotary sensor 24VDC

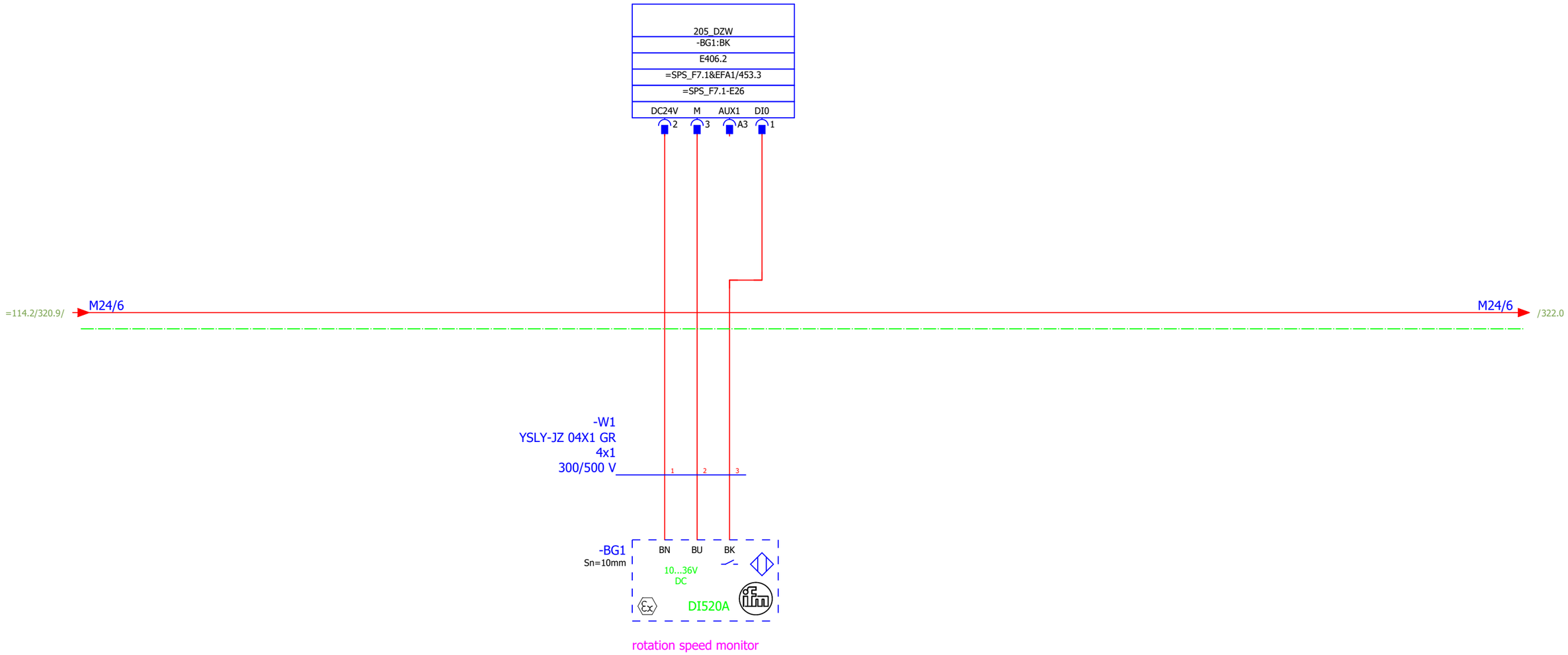

			Date	12.12.2019	Mixed feed plant Golden Poultry	BEYTEC ... your gateway to success	elevator rpm	= 205	
			Ed.	willen				+ F27	
			Appr		field 7 external signals			1 : 1 / Part II	Page 321
Modification	Date	Name	Original	V:\EPLAN\Projekte\Company\Replace\Beytec\2018\Feed Mill Alssad.elk	Replaced by				Page 605

Replaced by BEYTEC

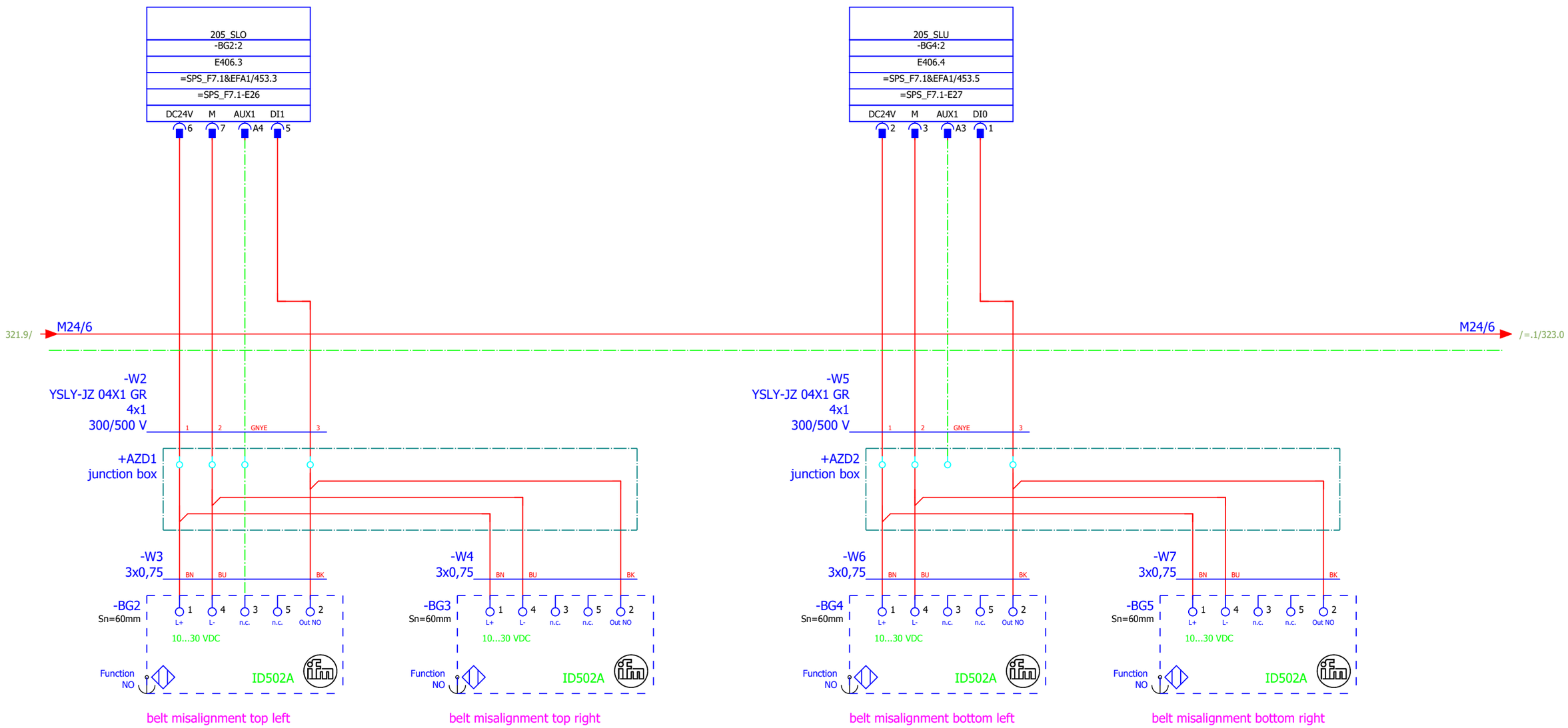

321

=.1/323

			Date	12.12.2019	Mixed feed plant Golden Poultry	BEYTEC ... your gateway to success	elevator belt misalignment	= 205	
			Ed.	willen				+ F27	
			Appr		field 7 external signals			1 : 1 / Part II	Page 322
Modification	Date	Name	Original	V:\EPLAN\Projekte\Company\Replace\Beytec\2018\Feed Mill Alssad.elk	Replaced by				Page 605

Replace Beytec

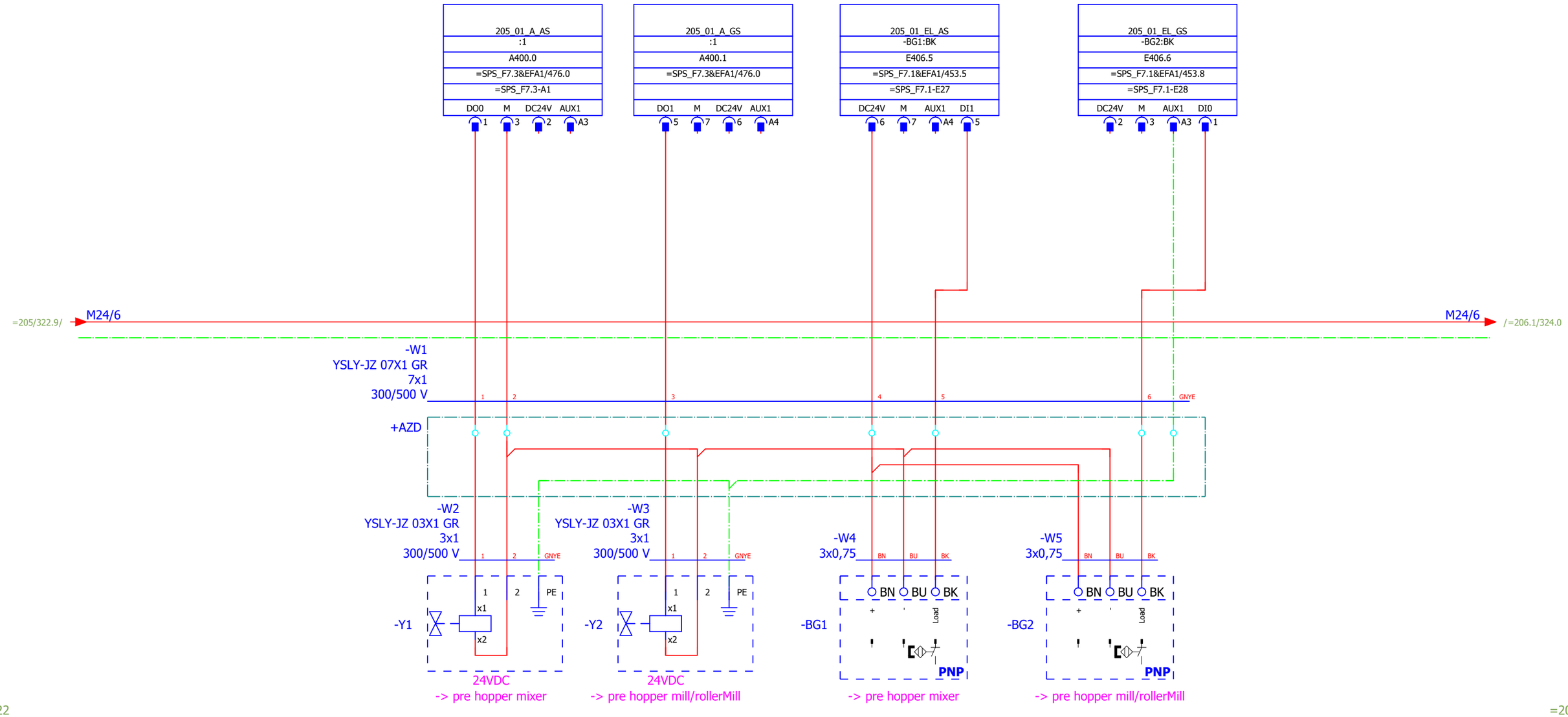
205_01_A_AS
:1
A400.0
=SPS_F7.3&EFA1/476.0
=SPS_F7.3-A1
DO0 M DC24V AUX1
1 3 2 A3
205_01_A_GS
:1
A400.1
=SPS_F7.3&EFA1/476.0
DO1 M DC24V AUX1
5 7 6 A4
205_01_EL_AS
-BG1:BK
E406.5
=SPS_F7.1&EFA1/453.5
=SPS_F7.1-E27
DC24V M AUX1 DI1
6 7 A4 5
205_01_EL_GS
-BG2:BK
E406.6
=SPS_F7.1&EFA1/453.8
=SPS_F7.1-E28
DC24V M AUX1 DI0
2 3 A3 1
=205/322.9/
M24/6
M24/6
/=206.1/324.0
-W1
YSLY-JZ 07X1 GR
7x1
300/500 V
1 2 3 4 5 6 GNYE
+AZD
-W2
YSLY-JZ 03X1 GR
3x1
300/500 V
1 2 GNYE
-W3
YSLY-JZ 03X1 GR
3x1
300/500 V
1 2 GNYE
-W4
3x0,75
BN BU BK
-W5
3x0,75
BN BU BK
-Y1
1 2 PE
x1
x2
24VDC
-> pre hopper mixer
-Y2
1 2 PE
x1
x2
24VDC
-> pre hopper mill/rollerMill
-BG1
BN BU BK
+ ' Load
PNP
-> pre hopper mixer
-BG2
BN BU BK
+ ' Load
PNP
-> pre hopper mill/rollerMill

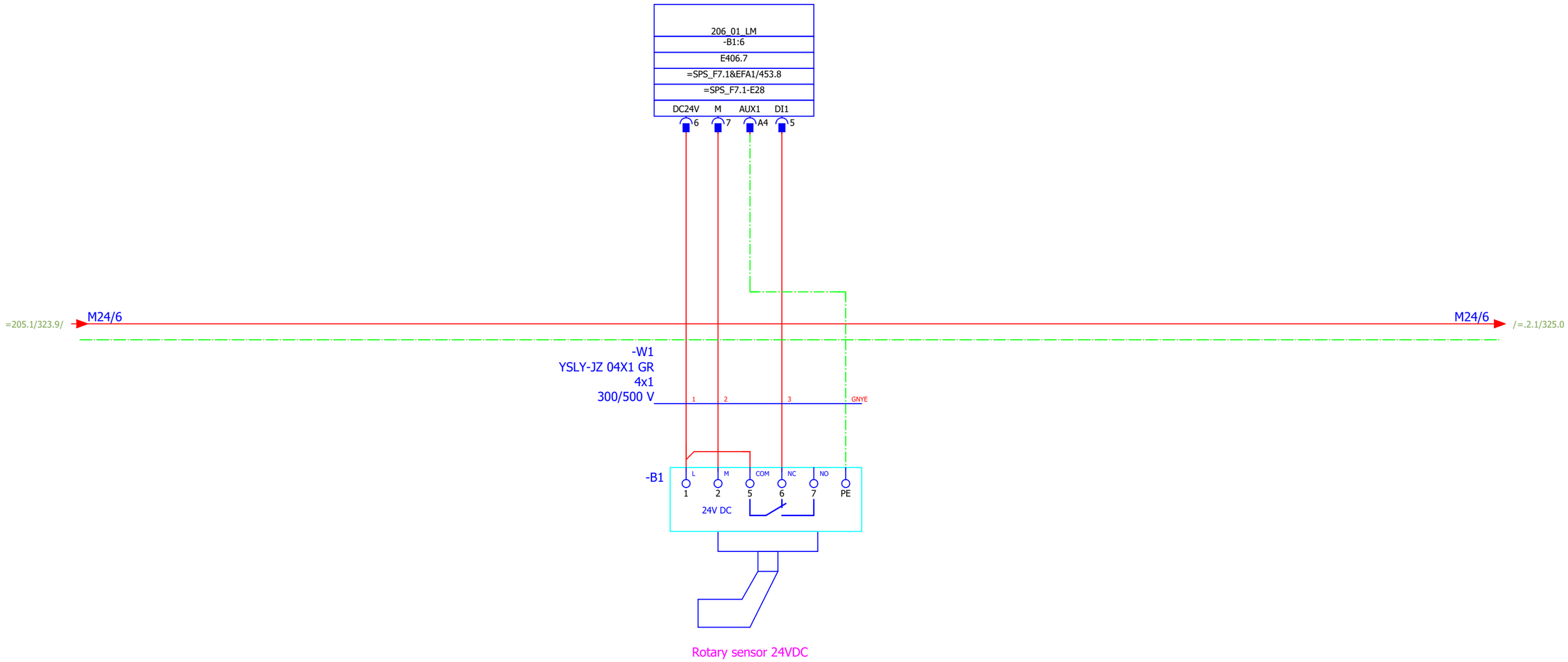
206_01_LM
-B1:6
E406.7
=SPS_F7.1&EFA1/453.8
=SPS_F7.1-E28
DC24V
M
AUX1
DI1
6
7
A4
5
=205.1/323.9/
M24/6
M24/6
/=.2.1/325.0
-W1
YSLY-JZ 04X1 GR
4x1
300/500 V
1
2
3
GNYE
-B1
L
M
COM
NC
NO
1
2
5
6
7
PE
24V DC
Rotary sensor 24VDC

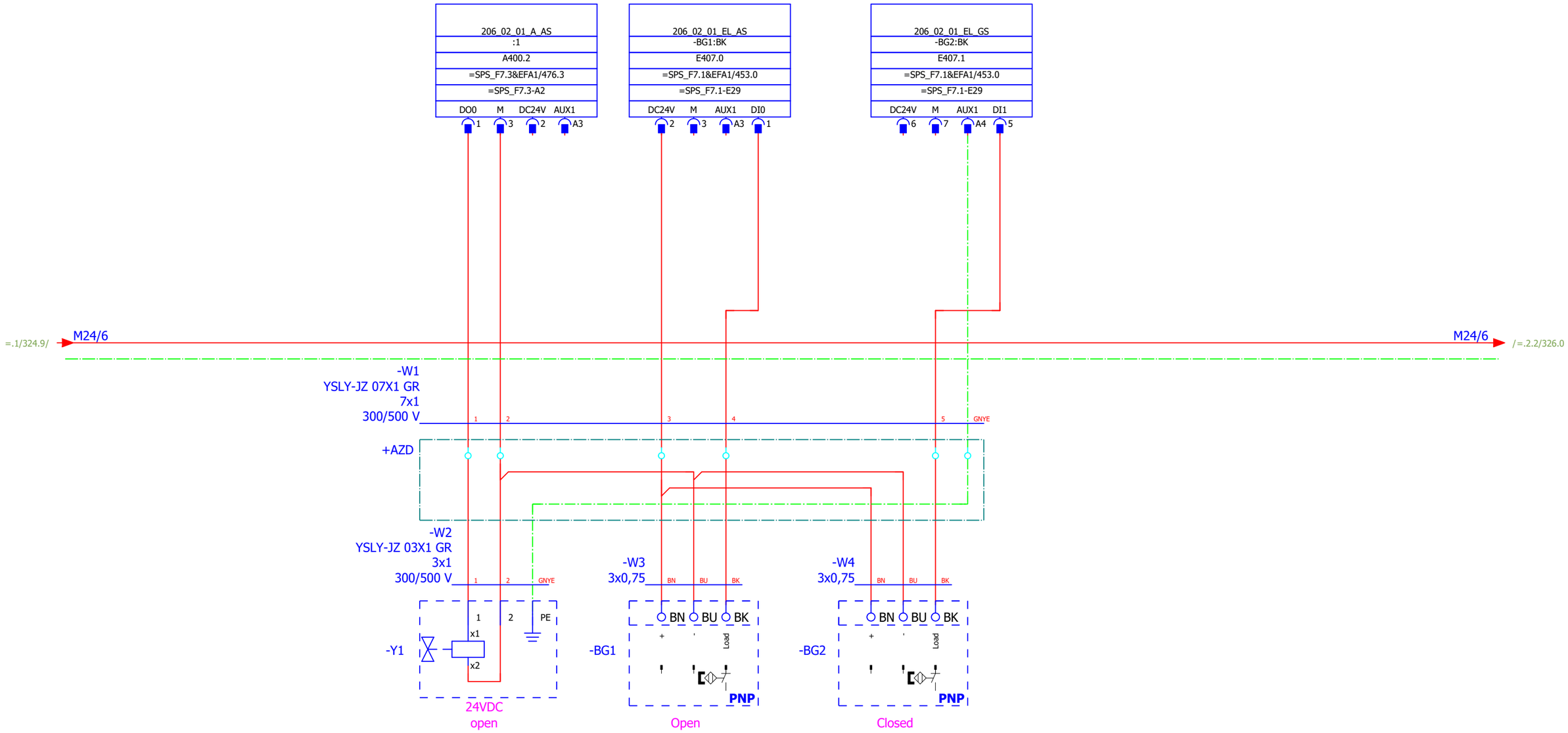

			Date	12.12.2019	Mixed feed plant Golden Poultry	BEYTEC ... your gateway to success	pneumatic slide	= 206.2.1	
			Ed.	willen				+ F27	
			Appr		field 7 external signals			1 : 1 / Part II	Page 325
Modification	Date	Name	Original	V:\EPLAN\Projekte\Company\Replace\Beytec\2018\Feed Mill Alssad.elk	Replaced by				Page 605

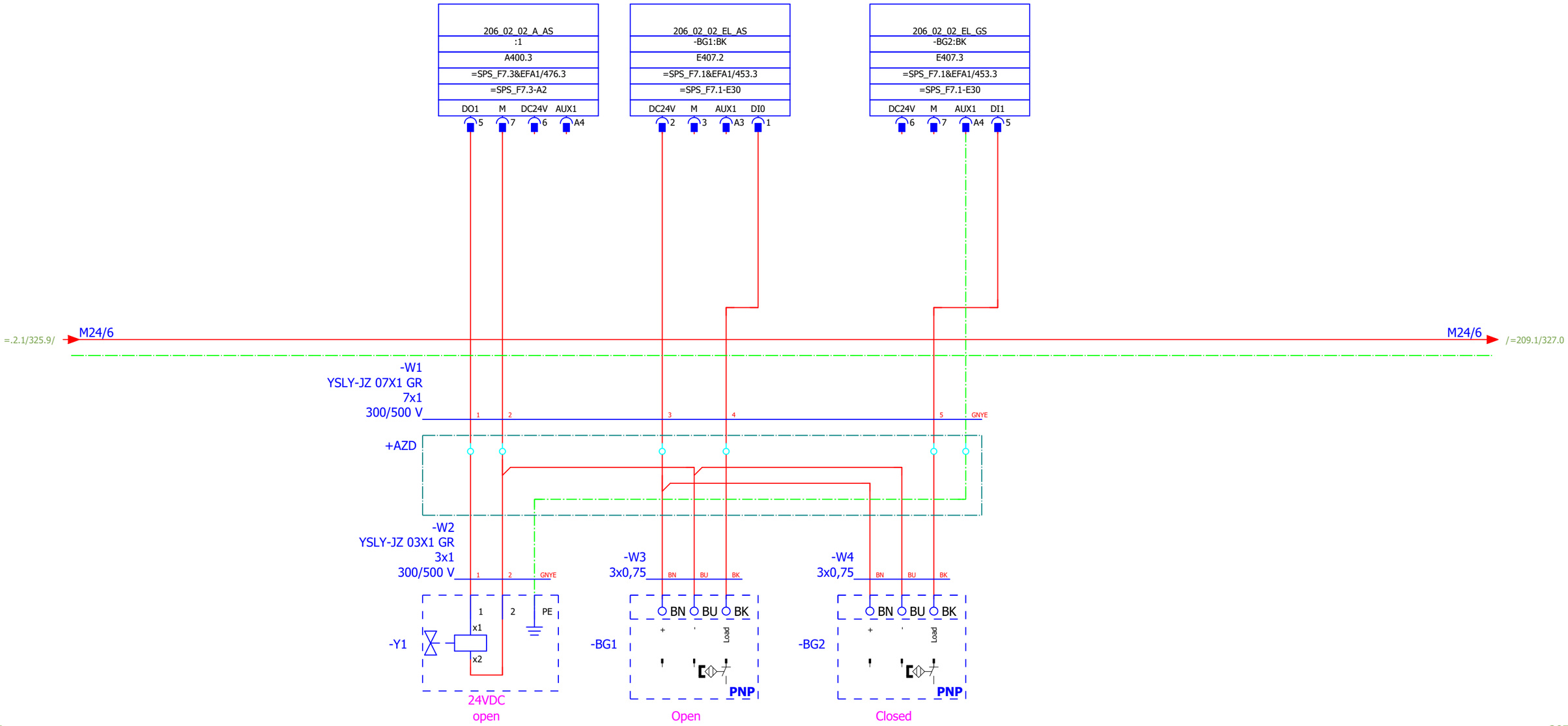
206_02_02_A_AS
:1
A400.3
=SPS_F7.3&EFA1/476.3
=SPS_F7.3-A2
DO1 M DC24V AUX1
5 7 6 A4
206_02_02_EL_AS
-BG1:BK
E407.2
=SPS_F7.1&EFA1/453.3
=SPS_F7.1-E30
DC24V M AUX1 DI0
2 3 A3 1
206_02_02_EL_GS
-BG2:BK
E407.3
=SPS_F7.1&EFA1/453.3
=SPS_F7.1-E30
DC24V M AUX1 DI1
6 7 A4 5
=.2.1/325.9/
M24/6
M24/6
/=209.1/327.0
-W1
YSLY-JZ 07X1 GR
7x1
300/500 V
1 2 3 4 5 GNYE
+AZD
-W2
YSLY-JZ 03X1 GR
3x1
300/500 V
1 2 GNYE
-W3
3x0,75
BN BU BK
-W4
3x0,75
BN BU BK
1 2 PE
x1
x2
-Y1
-BG1
-BG2
BN BU BK
+ -
Load
PNP
24VDC
open
Open
Closed

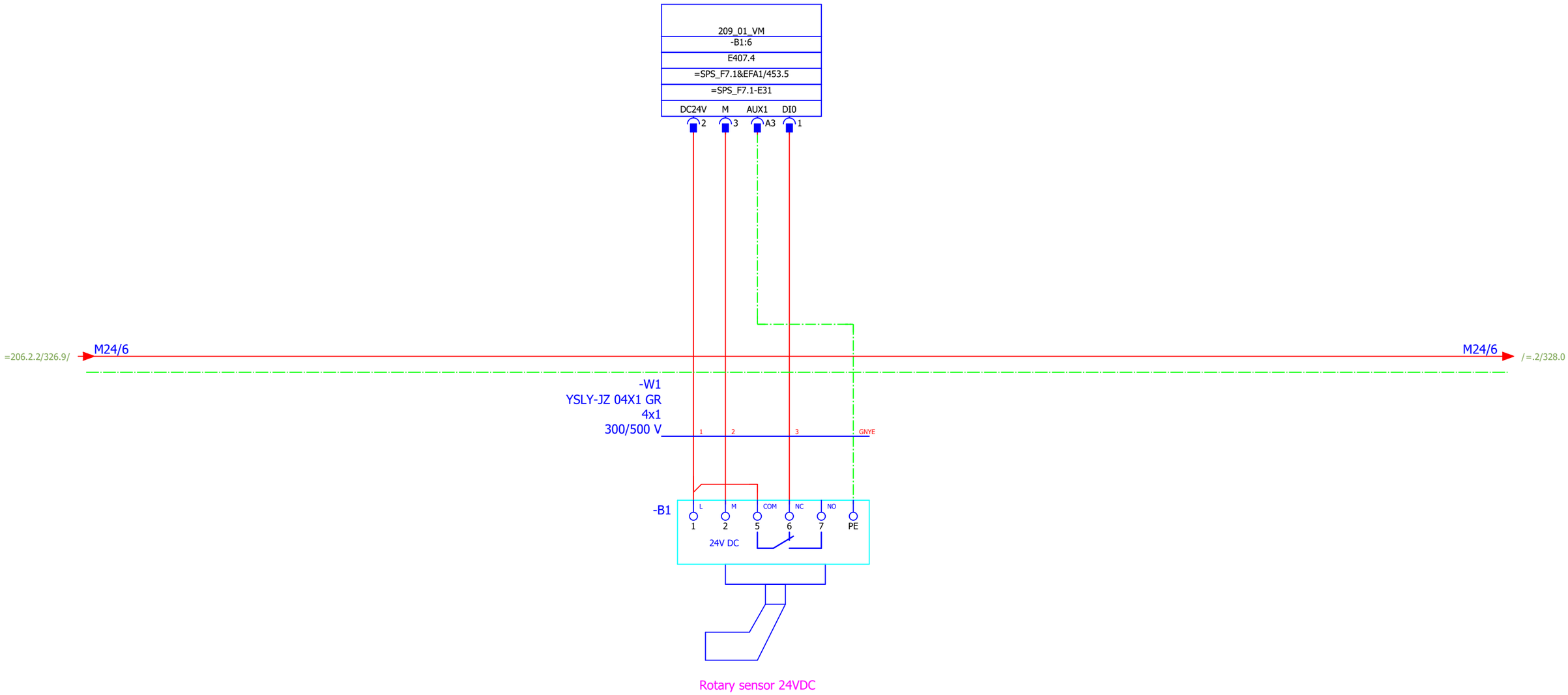
209_01_VM
-B1:6
E407.4
=SPS_F7.1&EFA1/453.5
=SPS_F7.1-E31
DC24V
M
AUX1
DI0
2
3
A3
1
=206.2.2/326.9/
M24/6
M24/6
/=.2/328.0
-W1
YSLY-JZ 04X1 GR
4x1
300/500 V
1
2
3
GNYE
-B1
L
M
COM
NC
NO
1
2
5
6
7
PE
24V DC
Rotary sensor 24VDC

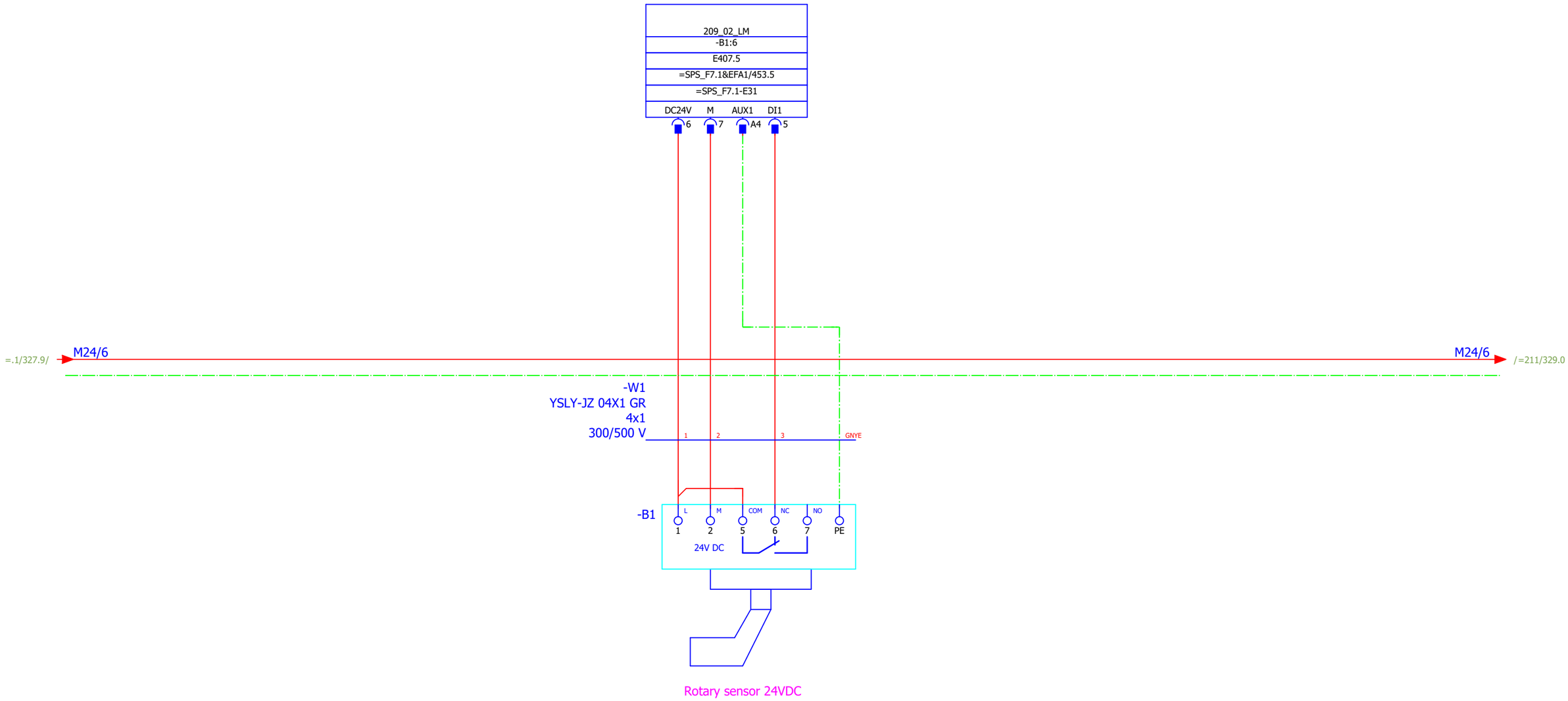

=.1/327

=210+F23/89

			Date	12.12.2019	Mixed feed plant Golden Poultry	BEYTEC ... your gateway to success	low-level indicator	= 209.2	
			Ed.	willen				+ F27	
			Appr		field 7 external signals			1 : 1 / Part II	Page 328
Modification	Date	Name	Original	V:\EPLAN\Projekte\Company\Replace\Beytec\2018\Feed Mill Alssad.elk	Replaced by				Page 605

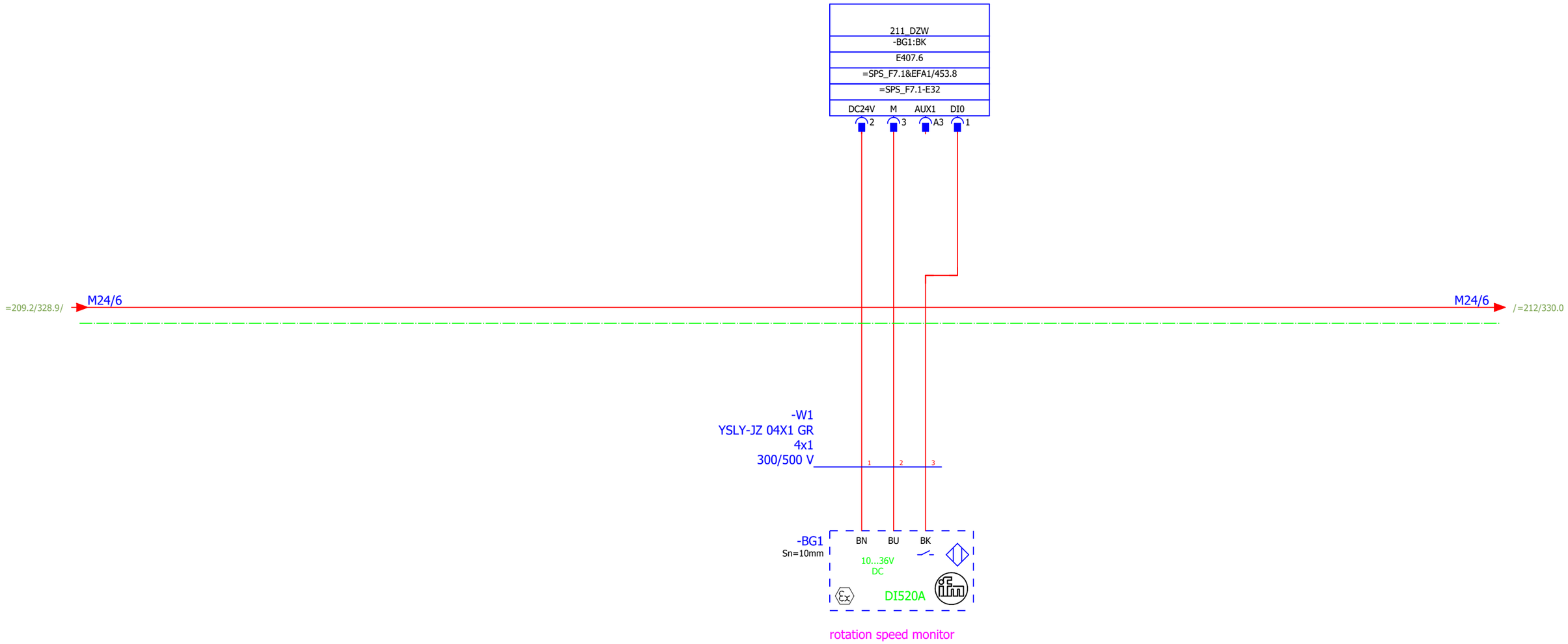
211_DZW
-BG1:BK
E407.6
=SPS_F7.1&EFA1/453.8
=SPS_F7.1-E32
DC24V
M
AUX1
DI0
2
3
A3
1
=209.2/328.9/
M24/6
M24/6
/=212/330.0
-W1
YSLY-JZ 04X1 GR
4x1
300/500 V
1
2
3
-BG1
Sn=10mm
BN
BU
BK
10...36V
DC
DI520A
rotation speed monitor

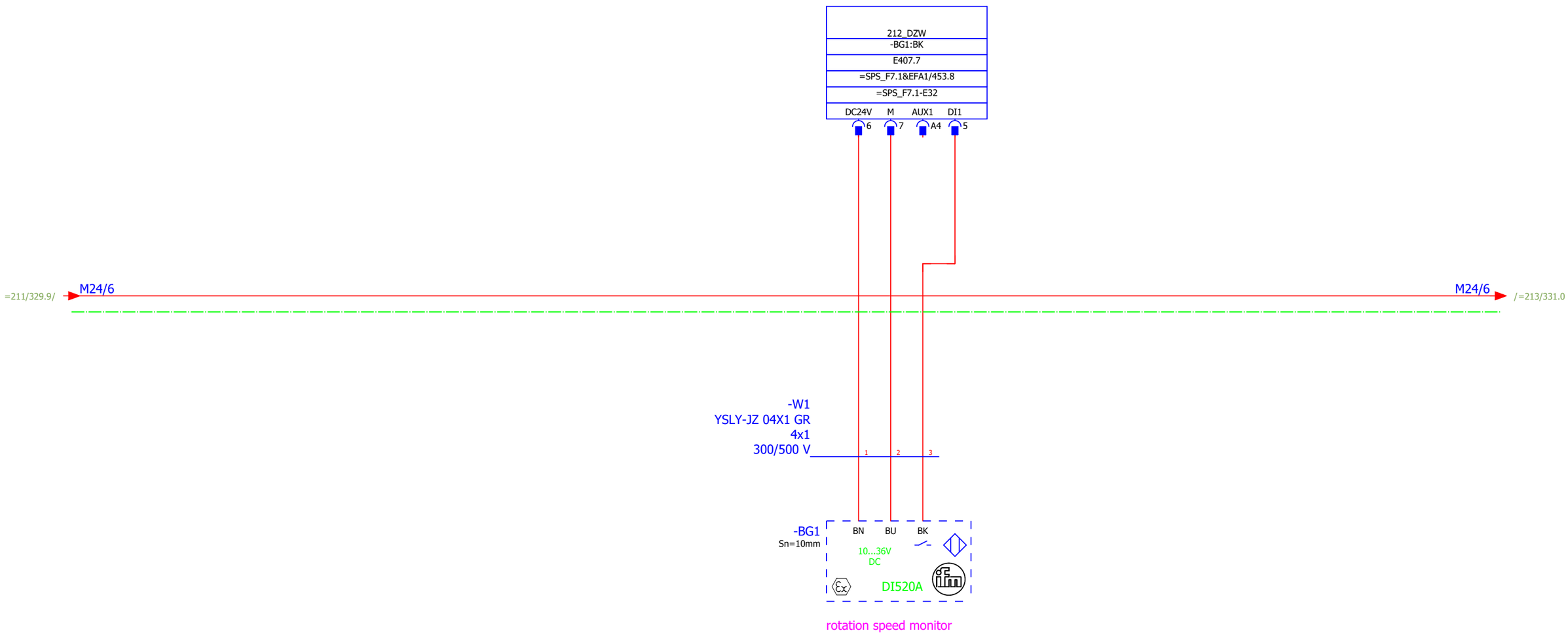

			Date	12.12.2019	Mixed feed plant Golden Poultry	BEYTEC ... your gateway to success	rotation speed monitor	= 212	
			Ed.	willen				+ F27	
			Appr		field 7 external signals			1 : 1 / Part II	Page 330
Modification	Date	Name	Original	V:\EPLAN\Projekte\Company\Alsad\Beytec\2018\Feed Mill Alssad.elk	Replaced by				Page 605

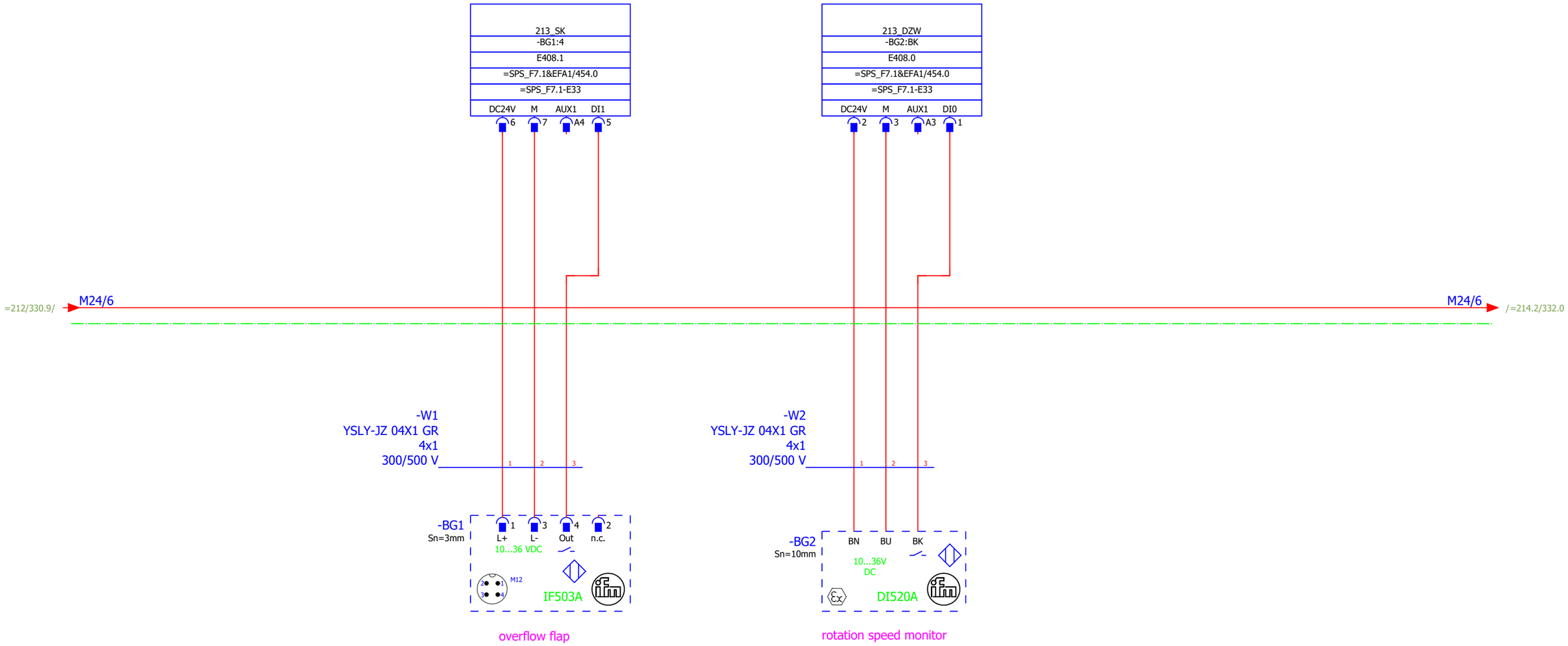

+F23/94

=214.2/332

			Date	12.12.2019	Mixed feed plant Golden Poultry	BEYTEC ... your gateway to success	overflow flap & rotation speed monitor	= 213	
			Ed.	willen				+ F27	
			Appr		field 7 external signals		1 : 1	Part II	Page 331
Modification	Date	Name	Original	V:\EPLAN\Projekte\Company\Replace\Beytec\2018\Feed Mill Alssad.elk	Replaced by				Page 605

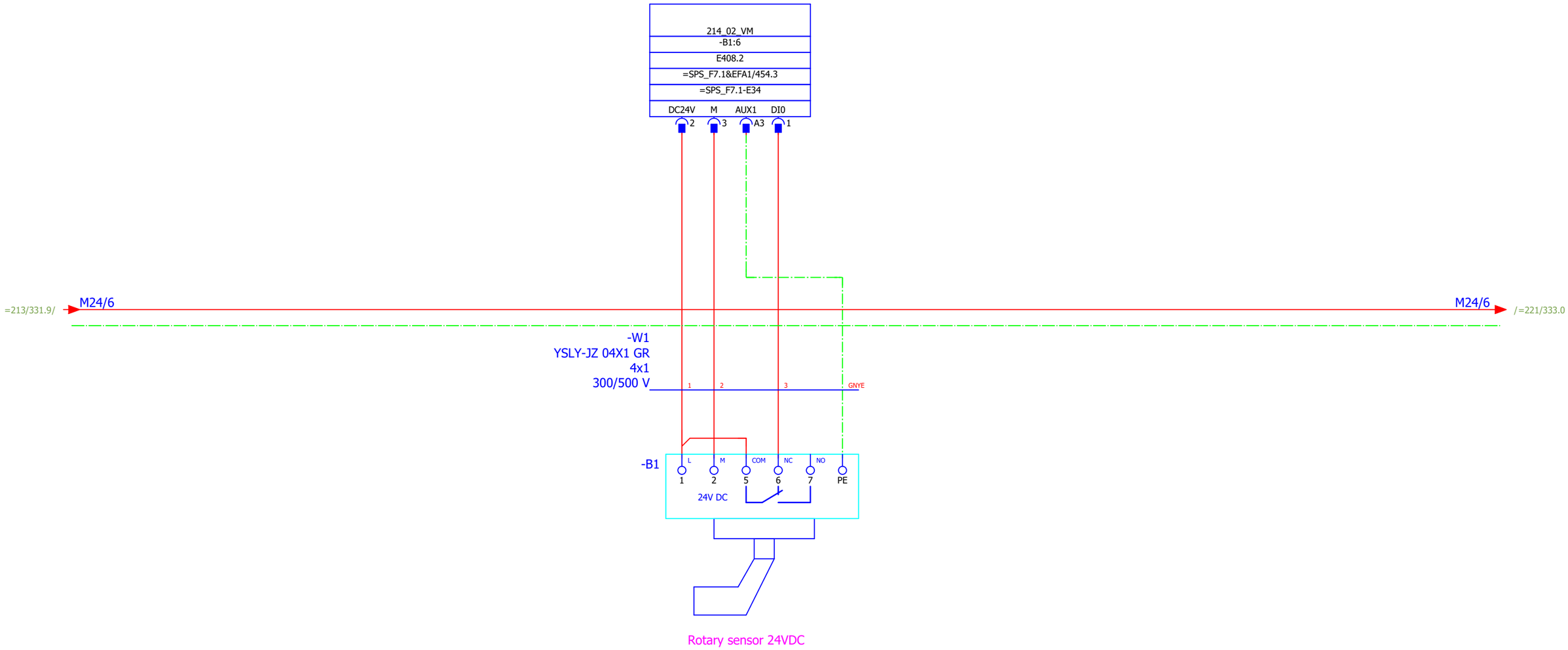
214_02_VM
-B1:6
E408.2
=SPS_F7.1&EFA1/454.3
=SPS_F7.1-E34
DC24V
M
AUX1
DI0
2
3
A3
1
=213/331.9/
M24/6
M24/6
/=221/333.0
-W1
YSLY-JZ 04X1 GR
4x1
300/500 V
1
2
3
GNYE
-B1
L
M
COM
NC
NO
1
2
5
6
7
PE
24V DC
Rotary sensor 24VDC

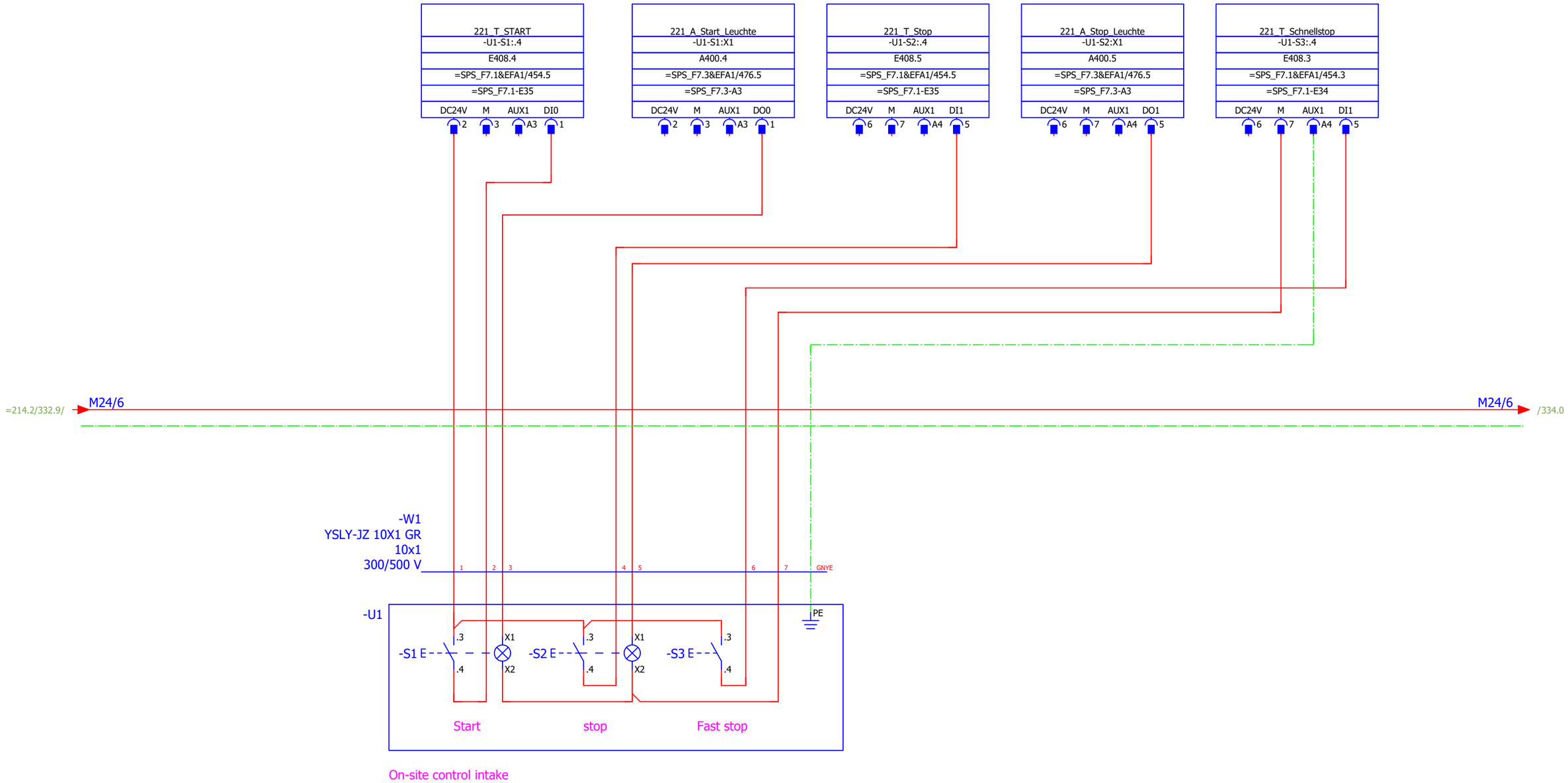

			Date	12.12.2019	Mixed feed plant Golden Poultry	BEYTEC ... your gateway to success	intake 4	= 221	
			Ed.	willen				+ F27	
			Appr		field 7 external signals			1 : 1 Part II	Page 333
Modification	Date	Name	Original	V:\EPLAN\Projekte\Company\Replace\Beytec\2018\Feed Mill Alssad.elk	Replaced by				Page 605

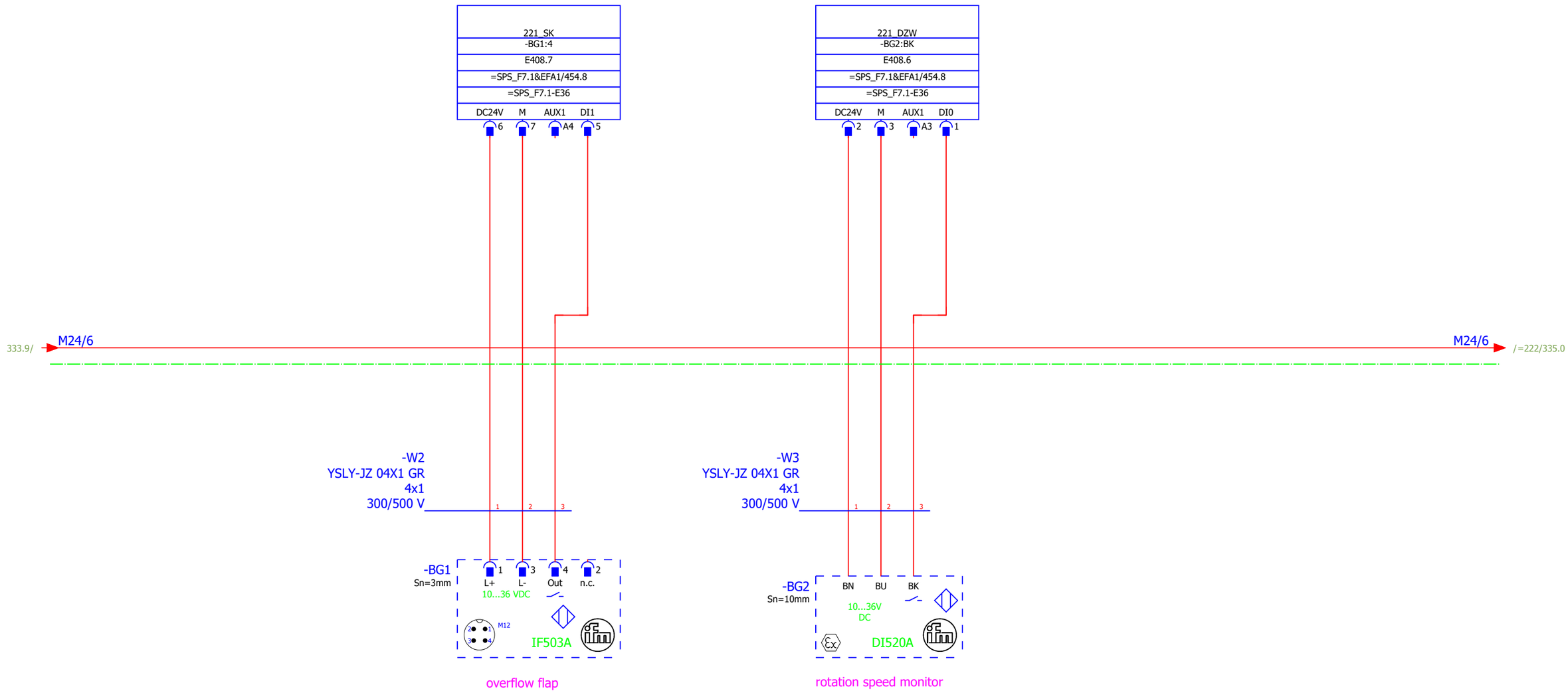

333

=222+F24/119

			Date	12.12.2019	Mixed feed plant Golden Poultry	BEYTEC ... your gateway to success	overflow flap & rotation speed monitor	= 221	
			Ed.	willen				+ F27	
			Appr		field 7 external signals			1 : 1 / Part II	Page 334
Modification	Date	Name	Original	V:\EPLAN\Projekte\Company\Replace\Beytec\2018\Feed Mill Alssad.elk	Replaced by				Page 605

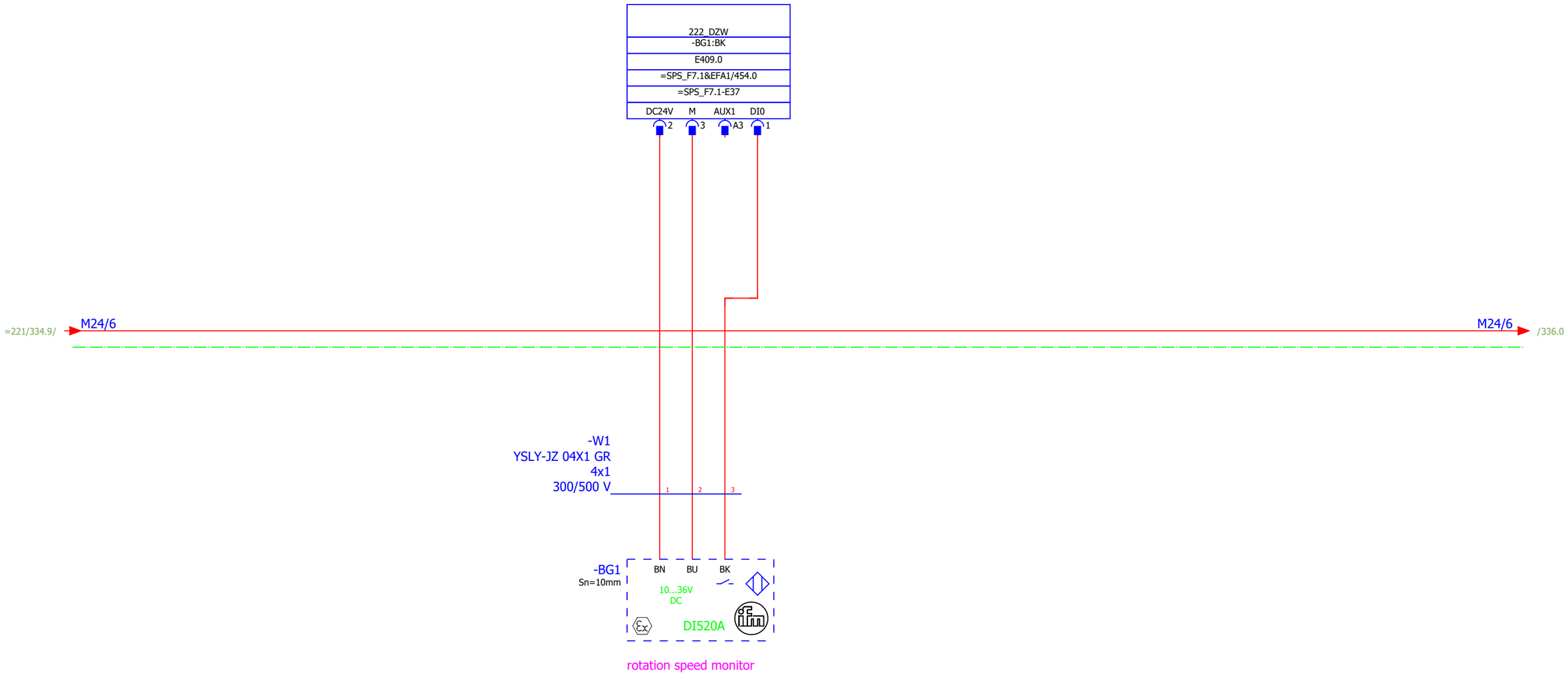

			Date	12.12.2019	Mixed feed plant Golden Poultry	BEYTEC ... your gateway to success	elevator rpm	= 222	
			Ed.	willen				+ F27	
			Appr		field 7 external signals			1 : 1 Part II	Page 335
Modification	Date	Name	Original	V:\EPLAN\Projekte\Company\Replace\Beytec\2018\Feed Mill Alssad.elk	Replaced by				Page 605

Replace Beytec

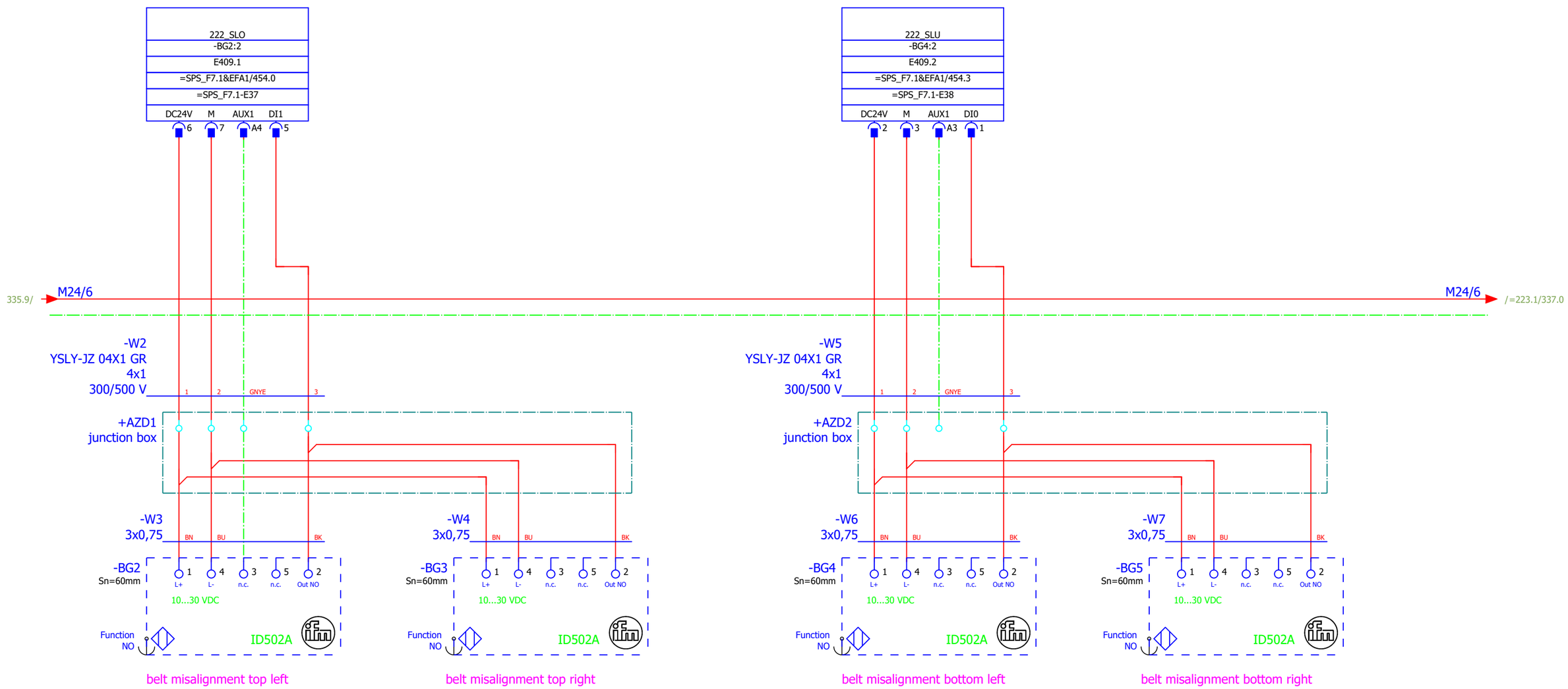

			Date	12.12.2019	Mixed feed plant Golden Poultry	BEYTEC ... your gateway to success	elevator belt misalignment	= 222	
			Ed.	willen				+ F27	
			Appr		field 7 external signals			1 : 1 / Part II	Page 336
Modification	Date	Name	Original	V:\EPLAN\Projekte\Company\Replace\Beytec\2018\Feed Mill Alssad.elk	Replaced by				Page 605

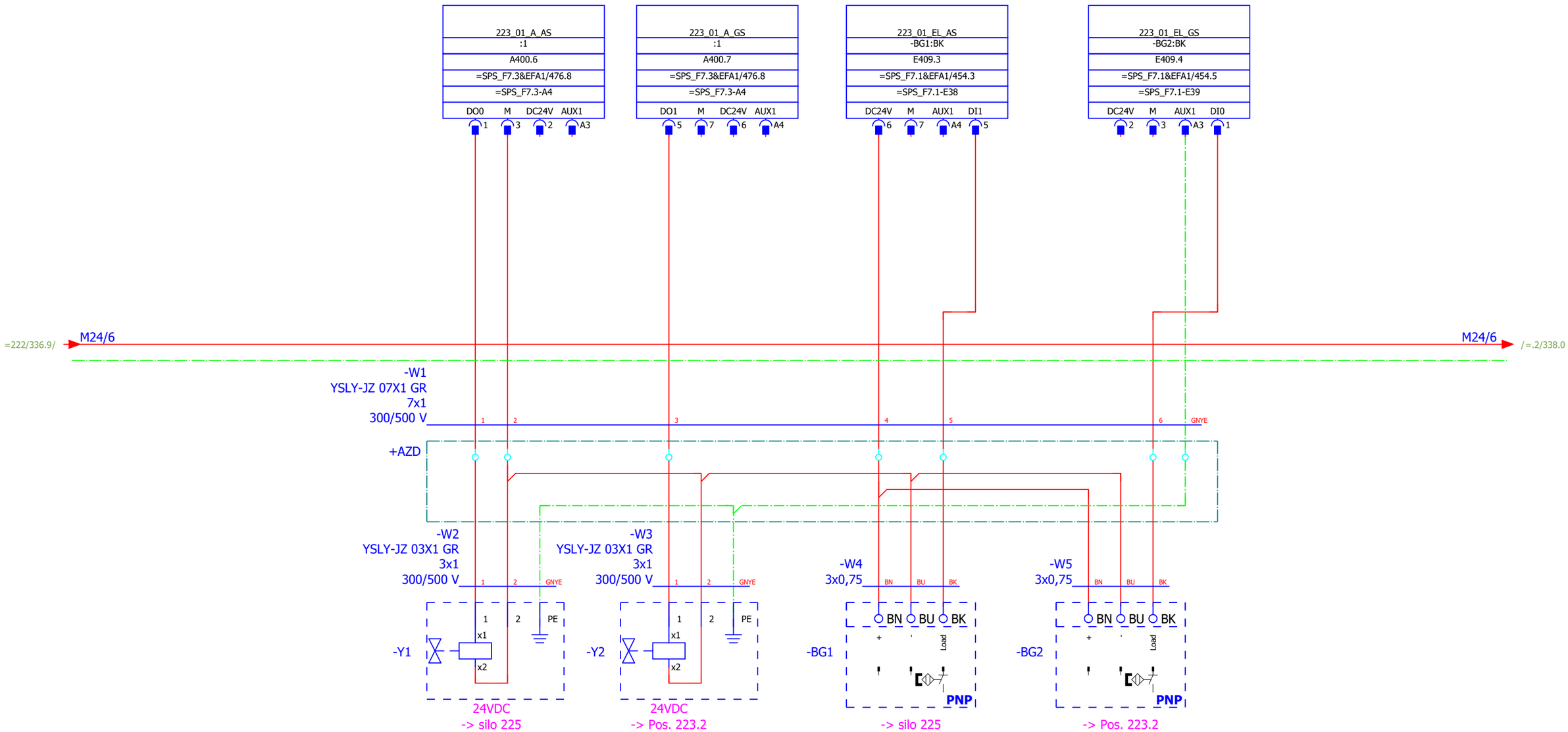

=222/336

=.2/338

			Date	12.12.2019	Mixed feed plant Golden Poultry	BEYTEC ... your gateway to success	Flap box	= 223.1	
			Ed.	willen				+ F27	
			Appr		field 7 external signals			1 : 1 Part II	Page 337
Modification	Date	Name	Original	V:\EPLAN\Projekte\Company\Beytec\2018\Feed Mill Alssad.elk	Replaced by				Page 605

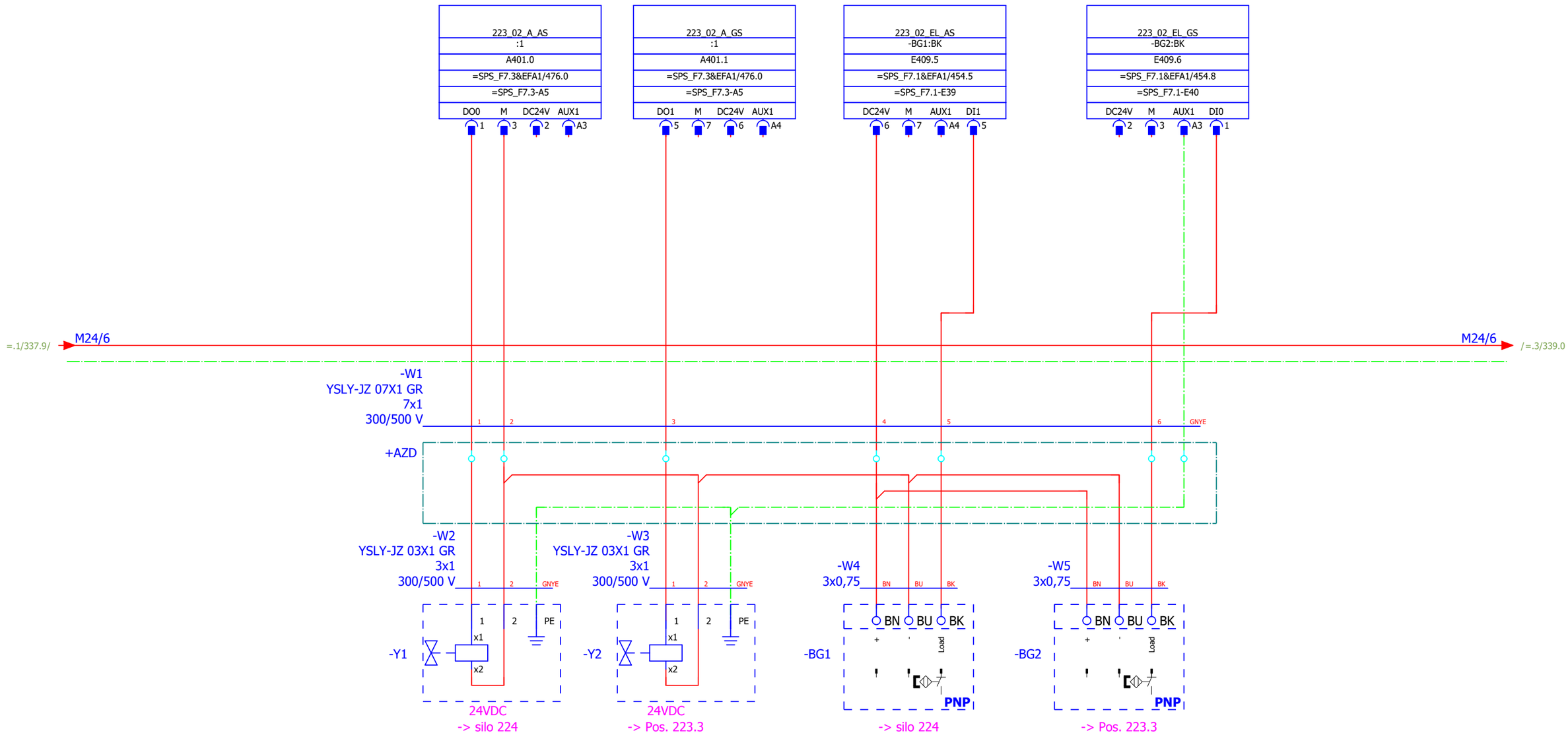

=.1/337

=.3/339

			Date	12.12.2019	Mixed feed plant Golden Poultry	BEYTEC ... your gateway to success	Flap box			= 223.2	
			Ed.	willen						+ F27	
			Appr		field 7 external signals			1 : 1	Part II	Page	338
Modification	Date	Name	Original	V:\EPLAN\Projekte\Company\Replace\Beytec\2018\Feed Mill Alssad.elk		Replaced by				Page	605

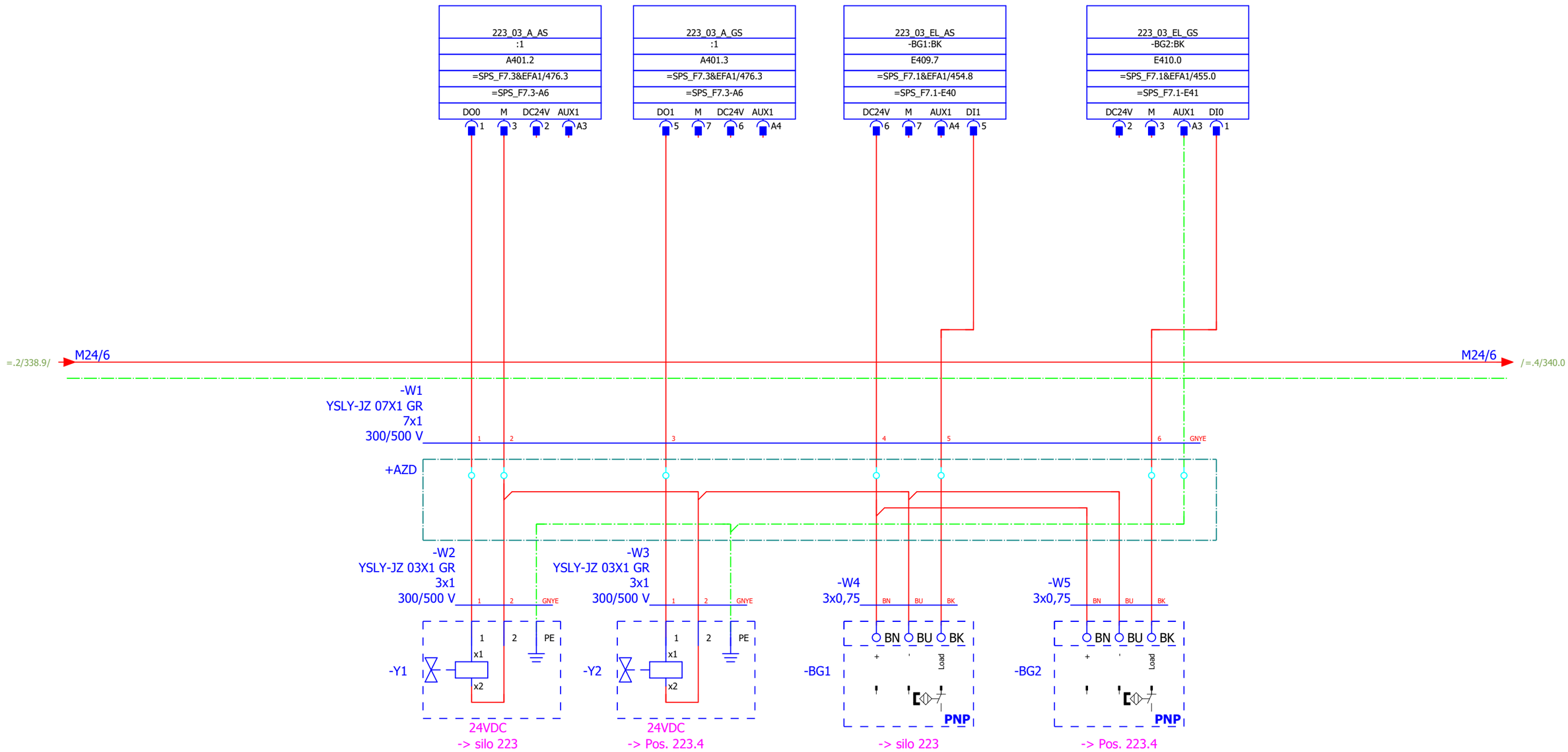

=.2/338

=.4/340

			Date	12.12.2019	Mixed feed plant Golden Poultry	BEYTEC ... your gateway to success	Flap box		= 223.3	
			Ed.	willen					+ F27	
			Appr		field 7 external signals			1 : 1	Part II	Page 339
Modification	Date	Name	Original	V:\EPLAN\Projekte\Company\Replace\Beytec\2018\Feed Mill Alssad.elk	Replaced by					Page 605

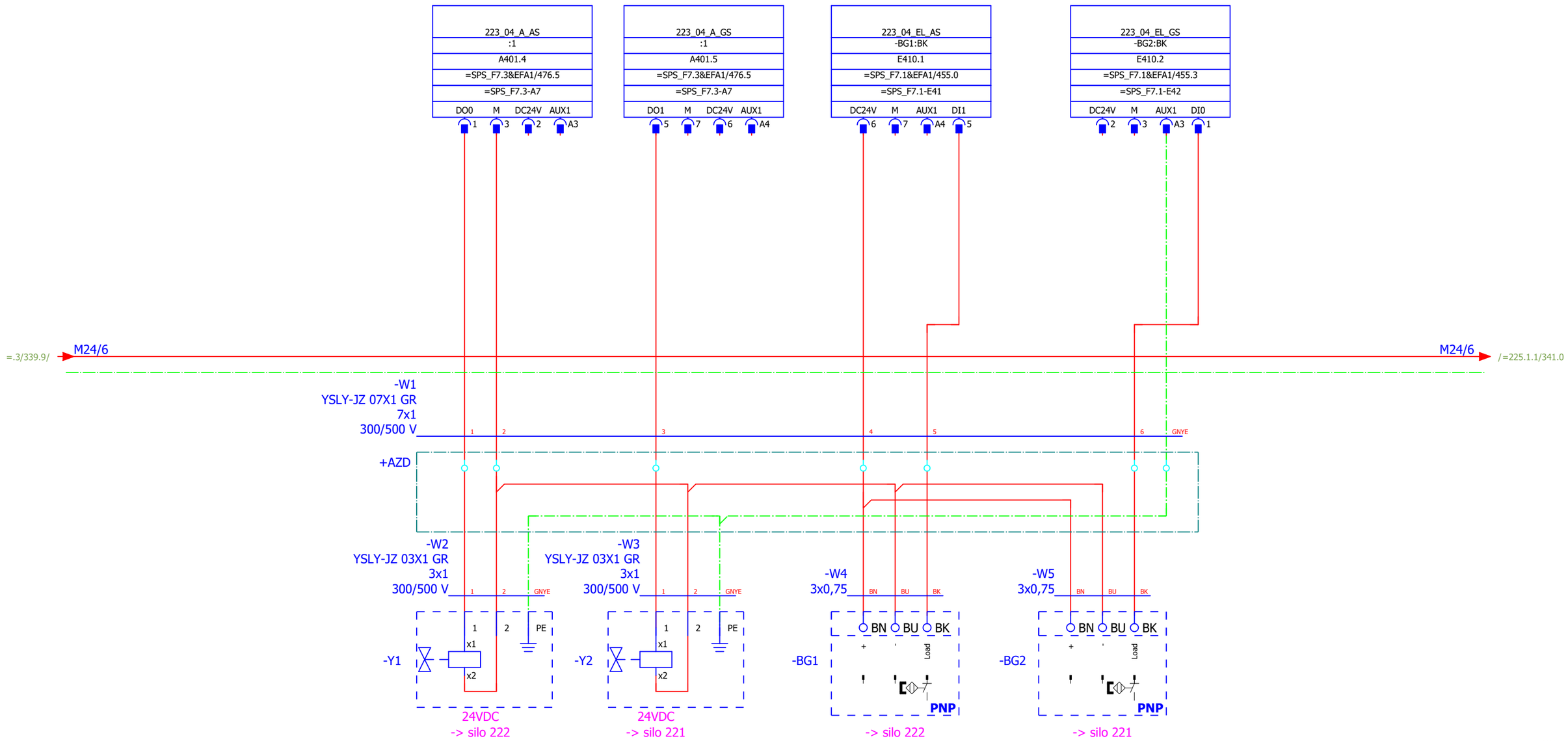
223_04_A_AS
:1
A401.4
=SPS_F7.3&EFA1/476.5
=SPS_F7.3-A7
DO0 M DC24V AUX1
1 3 2 A3
223_04_A_GS
:1
A401.5
=SPS_F7.3&EFA1/476.5
=SPS_F7.3-A7
DO1 M DC24V AUX1
5 7 6 A4
223_04_EL_AS
-BG1:BK
E410.1
=SPS_F7.1&EFA1/455.0
=SPS_F7.1-E41
DC24V M AUX1 DI1
6 7 A4 5
223_04_EL_GS
-BG2:BK
E410.2
=SPS_F7.1&EFA1/455.3
=SPS_F7.1-E42
DC24V M AUX1 DI0
2 3 A3 1
=.3/339.9/
M24/6
M24/6
/=225.1.1/341.0
-W1
YSLY-JZ 07X1 GR
7x1
300/500 V
1 2 3 4 5 6 GNYE
+AZD
-W2
YSLY-JZ 03X1 GR
3x1
300/500 V
1 2 GNYE
-W3
YSLY-JZ 03X1 GR
3x1
300/500 V
1 2 GNYE
-W4
3x0,75
BN BU BK
-W5
3x0,75
BN BU BK
-Y1
1 2 PE
x1
x2
24VDC
-> silo 222
-Y2
1 2 PE
x1
x2
24VDC
-> silo 221
-BG1
BN BU BK
+ ' Load
PNP
-> silo 222
-BG2
BN BU BK
+ ' Load
PNP
-> silo 221

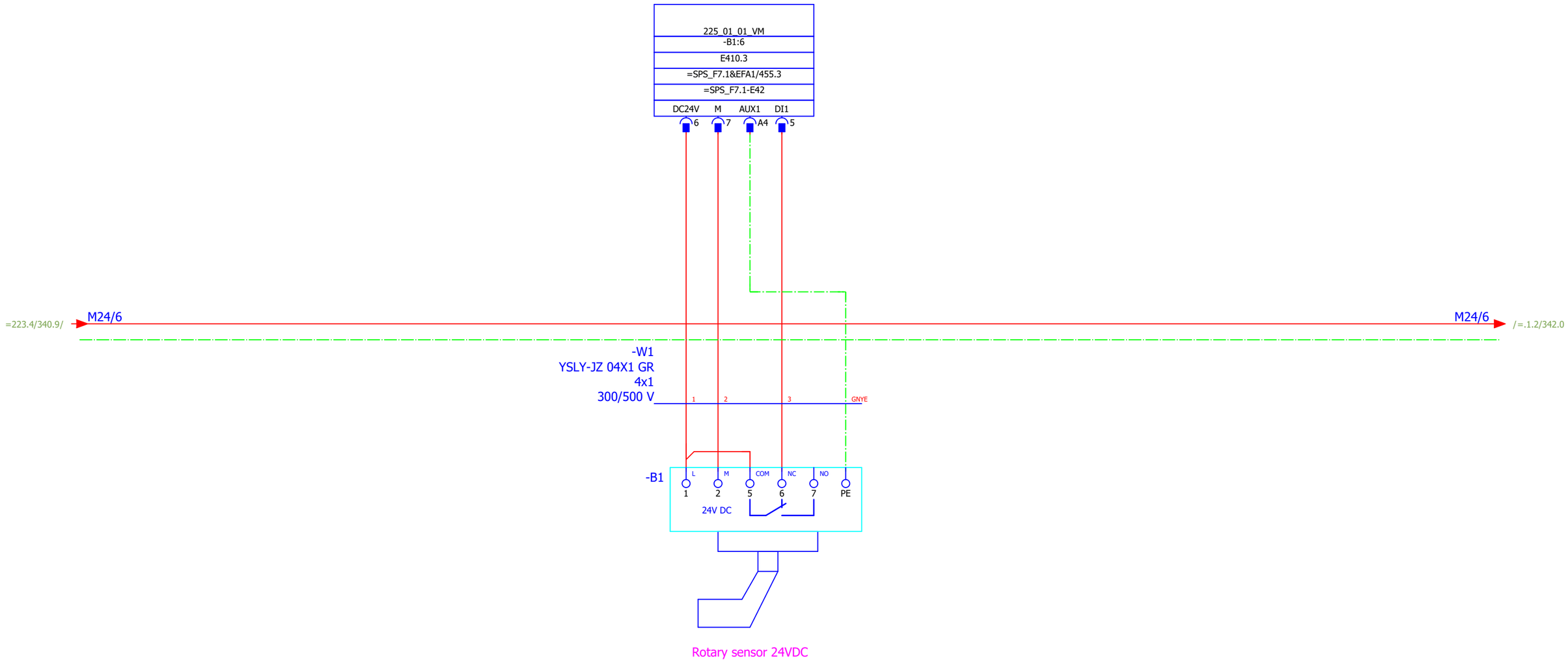
225_01_01_VM
-B1:6
E410.3
=SPS_F7.1&EFA1/455.3
=SPS_F7.1-E42
DC24V
M
AUX1
DI1
6
7
A4
5
=223.4/340.9/
M24/6
M24/6
/=.1.2/342.0
-W1
YSLY-JZ 04X1 GR
4x1
300/500 V
1
2
3
GNYE
-B1
L
M
COM
NC
NO
1
2
5
6
7
PE
24V DC
Rotary sensor 24VDC

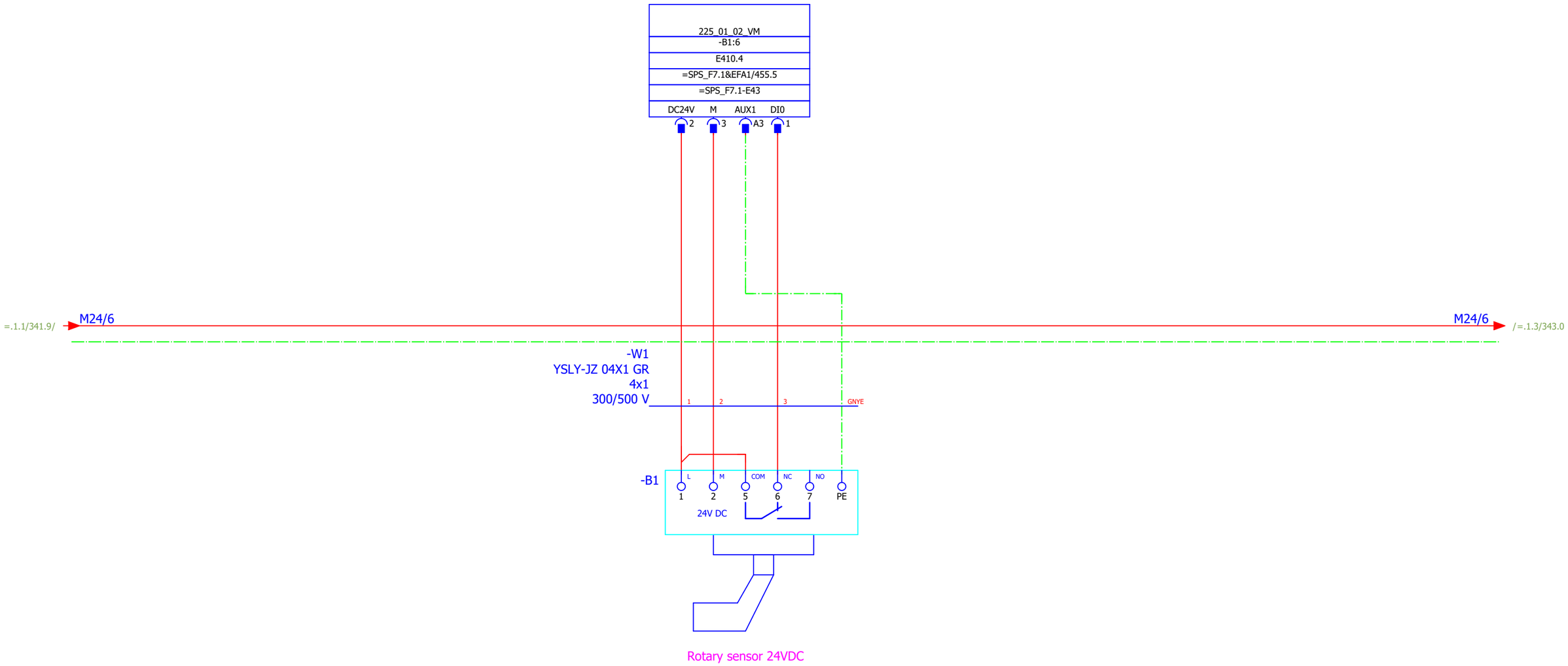

			Date	12.12.2019	Mixed feed plant Golden Poultry	BEYTEC	Full-level-indicator			= 225.1.2	
			Ed.	willen		... your gateway to success				+ F27	
			Appr		field 7 external signals			1 : 1	Part II	Page 342	
Modification	Date	Name	Original	V:\EPLAN\Projekte\Company\Replace\Beytec\2018\Feed Mill Alssad.elk	Replaced by					Page 605	

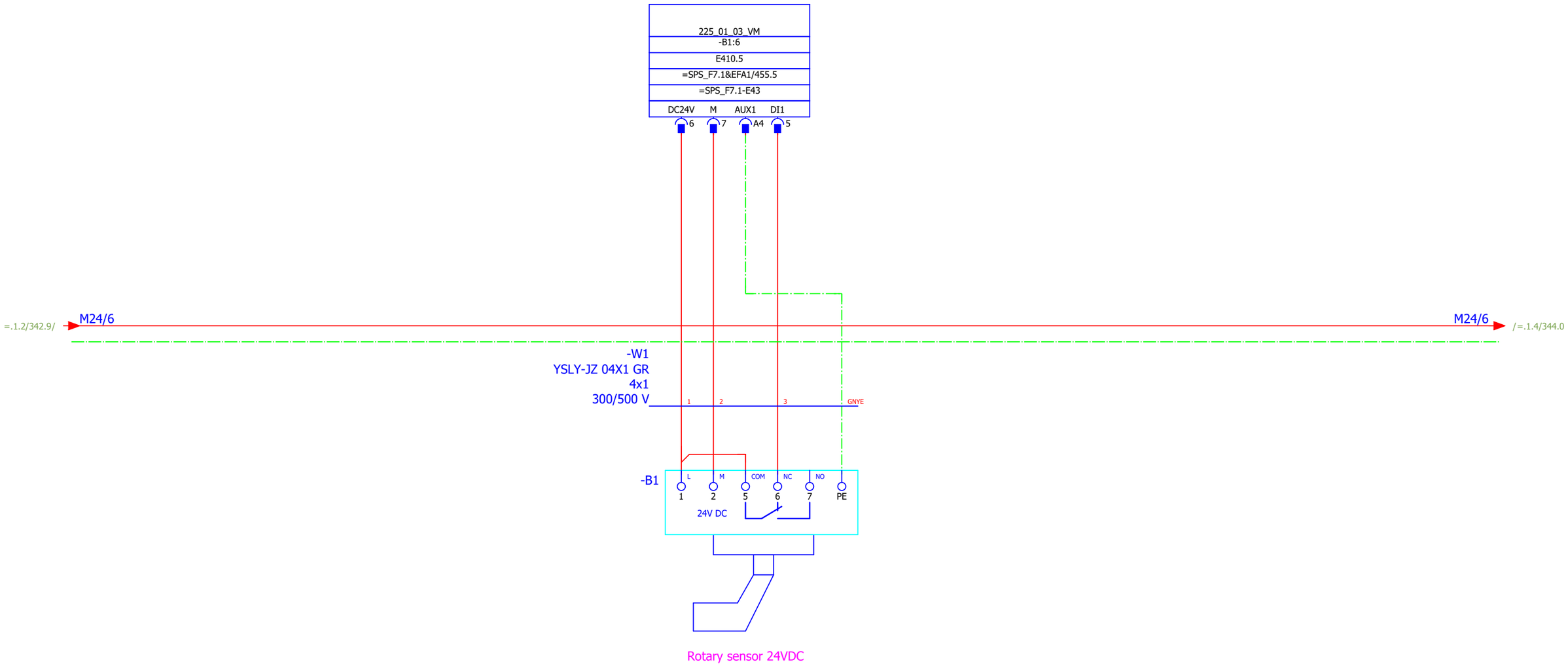
225_01_03_VM
-B1:6
E410.5
=SPS_F7.1&EFA1/455.5
=SPS_F7.1-E43
DC24V
M
AUX1
DI1
6
7
A4
5
=.1.2/342.9/
M24/6
M24/6
/=.1.4/344.0
-W1
YSLY-JZ 04X1 GR
4x1
300/500 V
1
2
3
GNYE
-B1
L
M
COM
NC
NO
1
2
5
6
7
PE
24V DC
Rotary sensor 24VDC

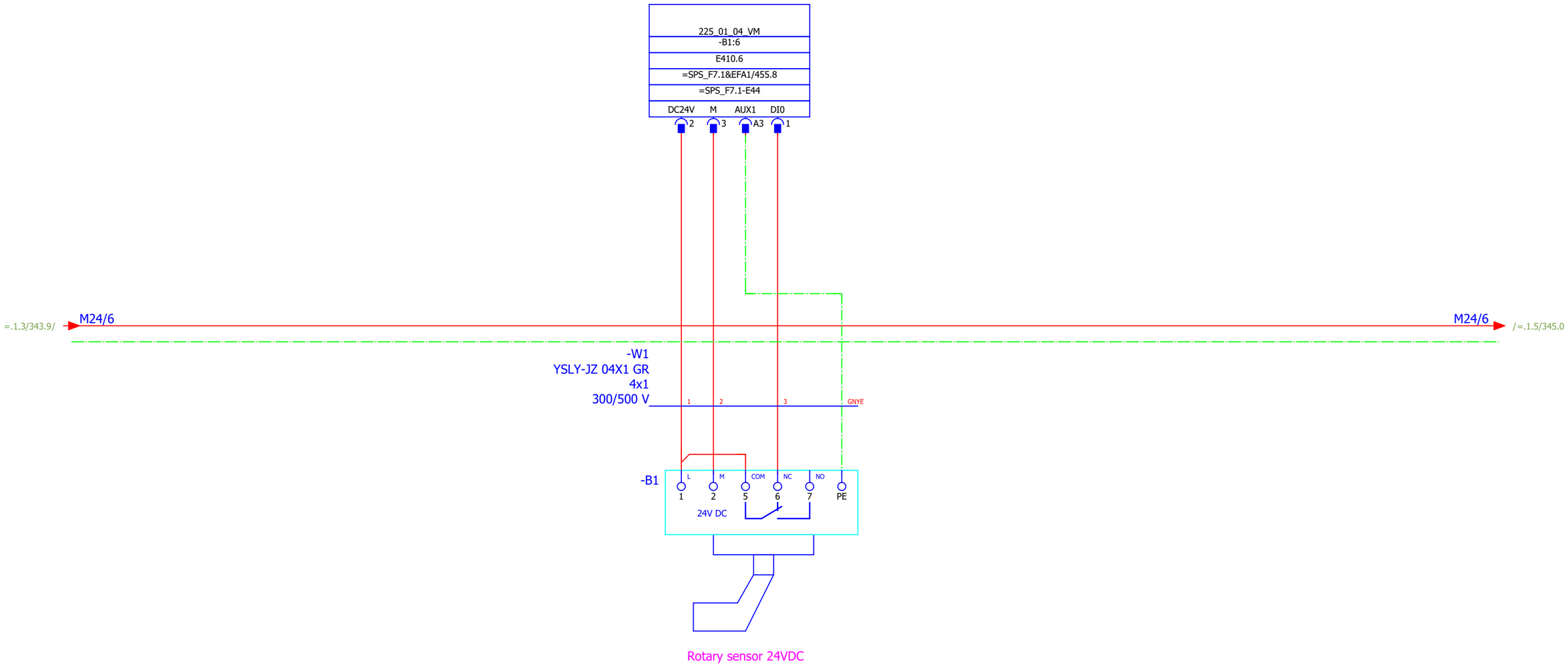
225_01_04_VM
-B1:6
E410.6
=SPS_F7.1&EFA1/455.8
=SPS_F7.1-E44
DC24V
M
AUX1
DI0
2
3
A3
1
=.1.3/343.9/
M24/6
M24/6
/=.1.5/345.0
-W1
YSLY-JZ 04X1 GR
4x1
300/500 V
1
2
3
GNYE
-B1
L
M
COM
NC
NO
1
2
5
6
7
PE
24V DC
Rotary sensor 24VDC

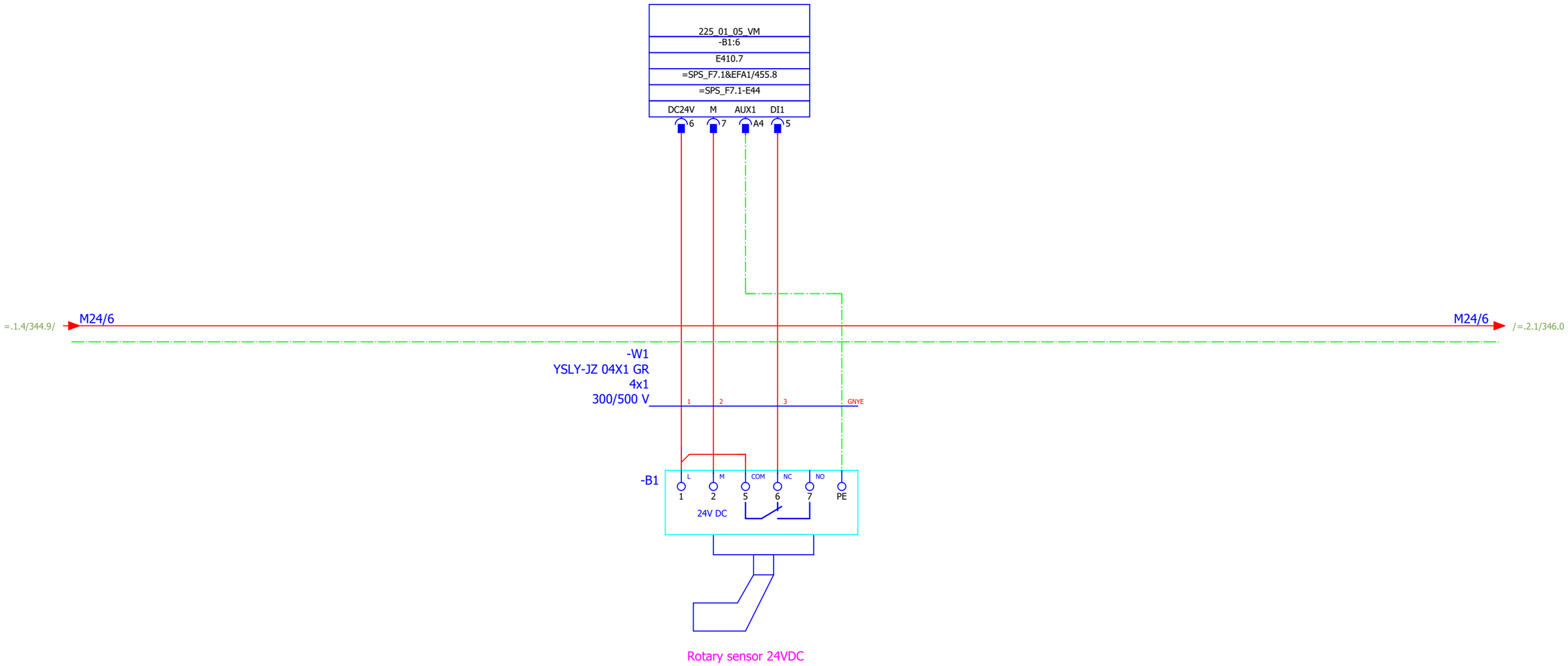
225_01_05_VM
-B1:6
E410.7
=SPS_F7.1&EFA1/455.8
=SPS_F7.1-E44
DC24V
M
AUX1
DI1
6
7
A4
5
=.1.4/344.9/
M24/6
M24/6
/=.2.1/346.0
-W1
YSLY-JZ 04X1 GR
4x1
300/500 V
1
2
3
GNYE
-B1
L
M
COM
NC
NO
1
2
5
6
7
PE
24V DC
Rotary sensor 24VDC

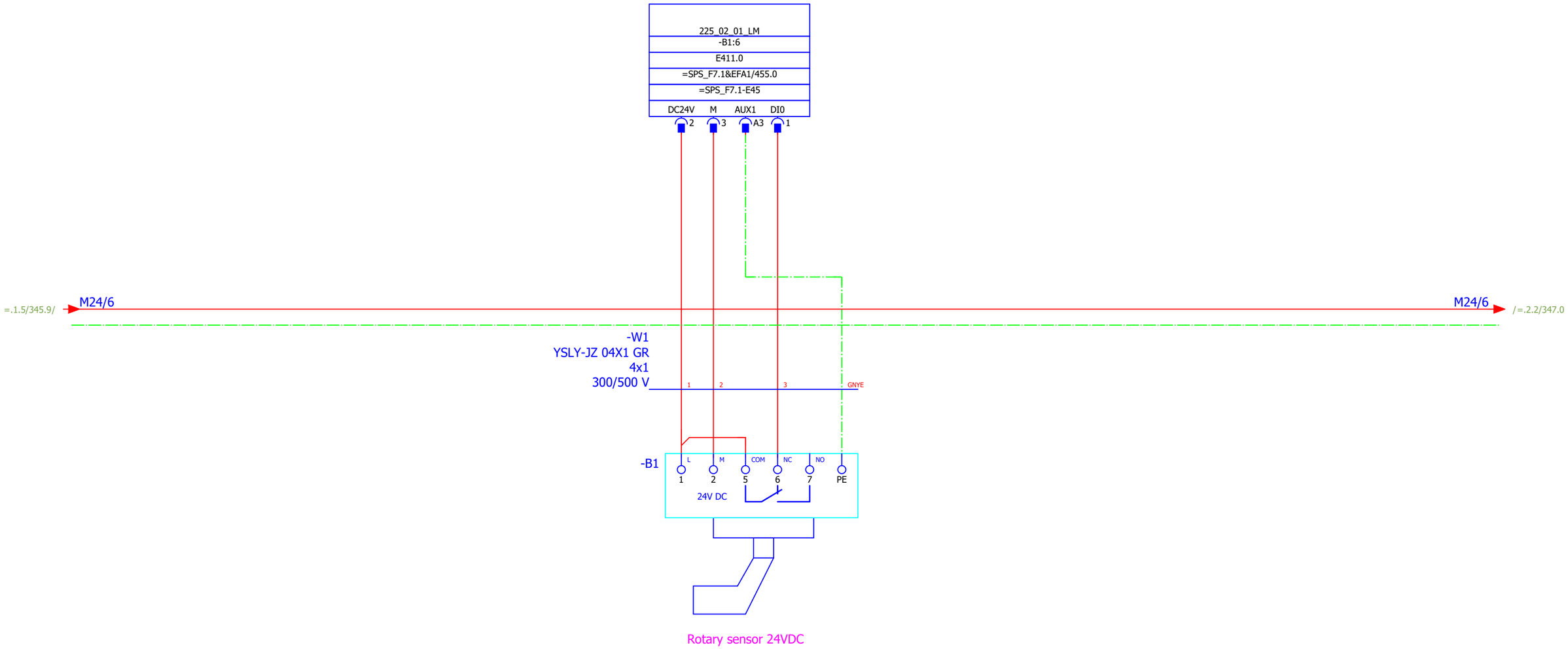
225_02_01_LM
-B1:6
E411.0
=SPS_F7.1&EFA1/455.0
=SPS_F7.1-E45
DC24V
M
AUX1
DI0
2
3
A3
1
=.1.5/345.9/
M24/6
M24/6
/=.2.2/347.0
-W1
YSLY-JZ 04X1 GR
4x1
300/500 V
1
2
3
GNYE
-B1
L
M
COM
NC
NO
1
2
5
6
7
PE
24V DC
Rotary sensor 24VDC

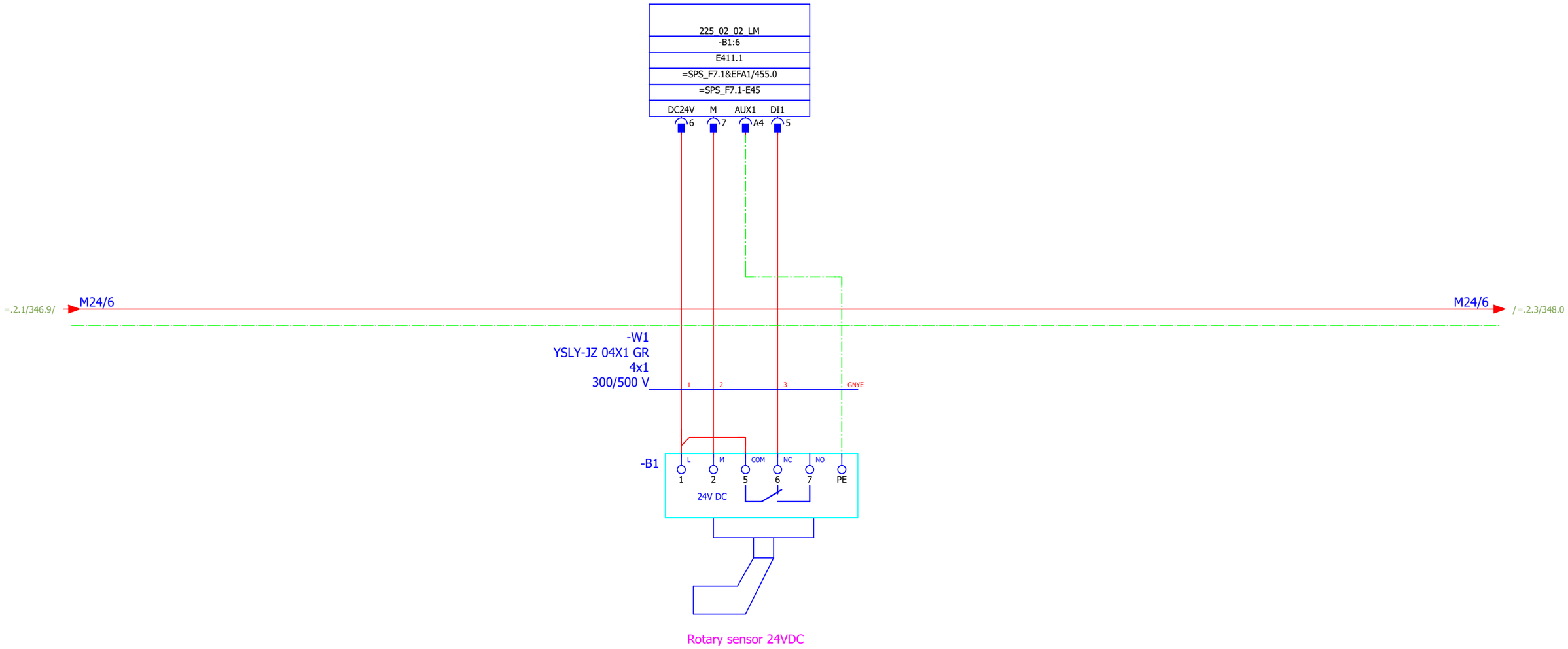

			Date	12.12.2019	Mixed feed plant Golden Poultry	BEYTEC	low-level indicator			= 225.2.2	
			Ed.	willen		... your gateway to success				+ F27	
			Appr		field 7 external signals			1 : 1	Part II	Page	347
Modification	Date	Name	Original	V:\EPLAN\Projekte\Company\Replace\Beytec\2018\Feed Mill Alssad.elk	Replaced by					Page	605

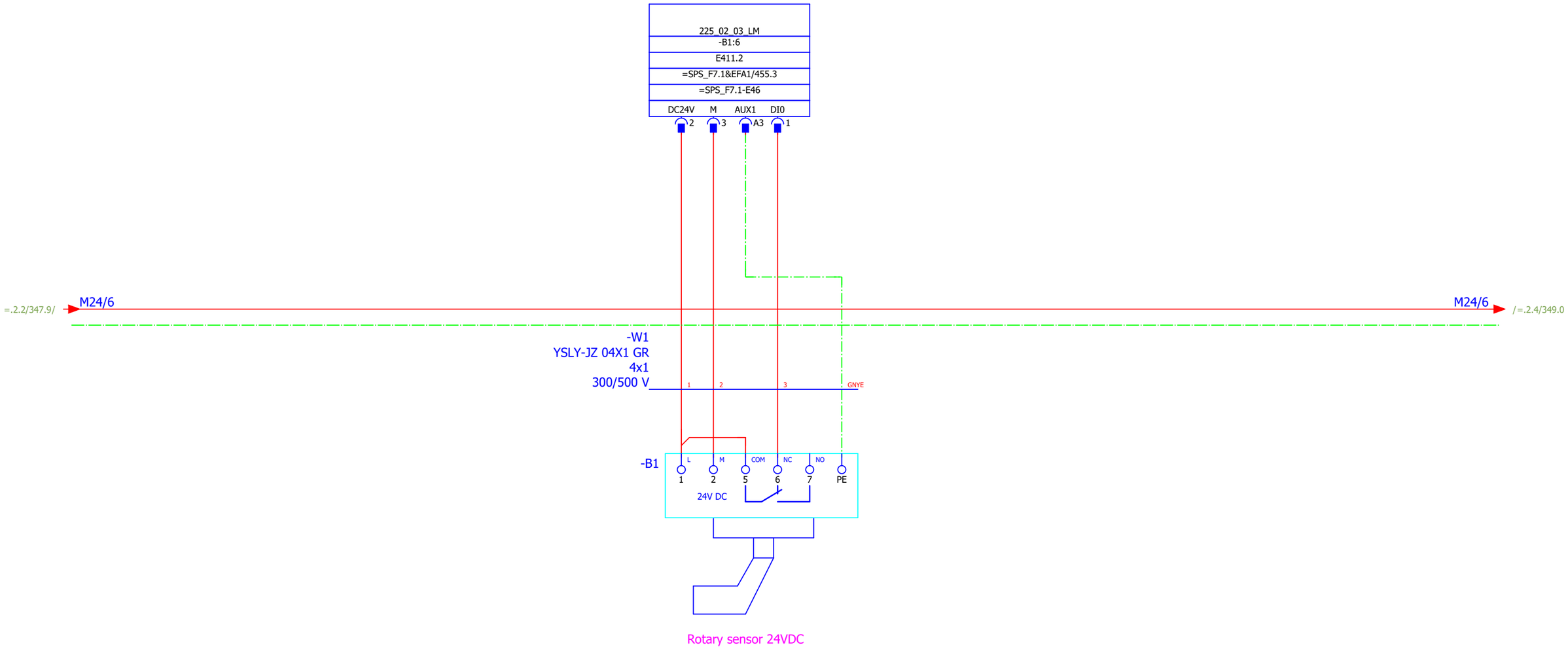

			Date	12.12.2019	Mixed feed plant Golden Poultry	BEYTEC ... your gateway to success	low-level indicator		= 225.2.3	
			Ed.	willen					+ F27	
			Appr		field 7 external signals			1 : 1	Part II	Page 348
Modification	Date	Name	Original	V:\EPLAN\Projekte\Company\Replace\Beytec\2018\Feed Mill Alssad.elk	Replaced by					Page 605

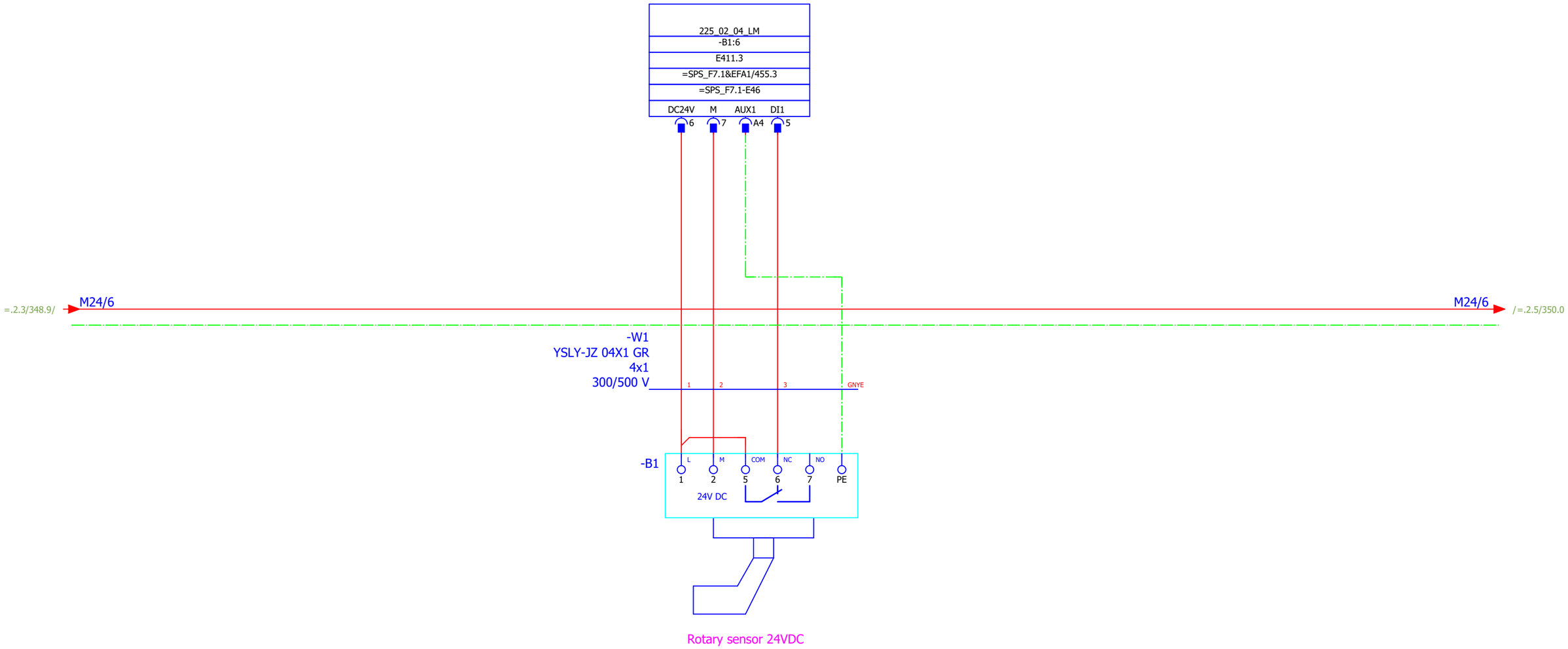

			Date	12.12.2019	Mixed feed plant Golden Poultry	BEYTEC ... your gateway to success	low-level indicator		= 225.2.4	
			Ed.	willen					+ F27	
			Appr		field 7 external signals			1 : 1	Part II	Page 349
Modification	Date	Name	Original	V:\EPLAN\Projekte\Company\Replace\Beytec\2018\Feed Mill Alssad.elk	Replaced by					Page 605

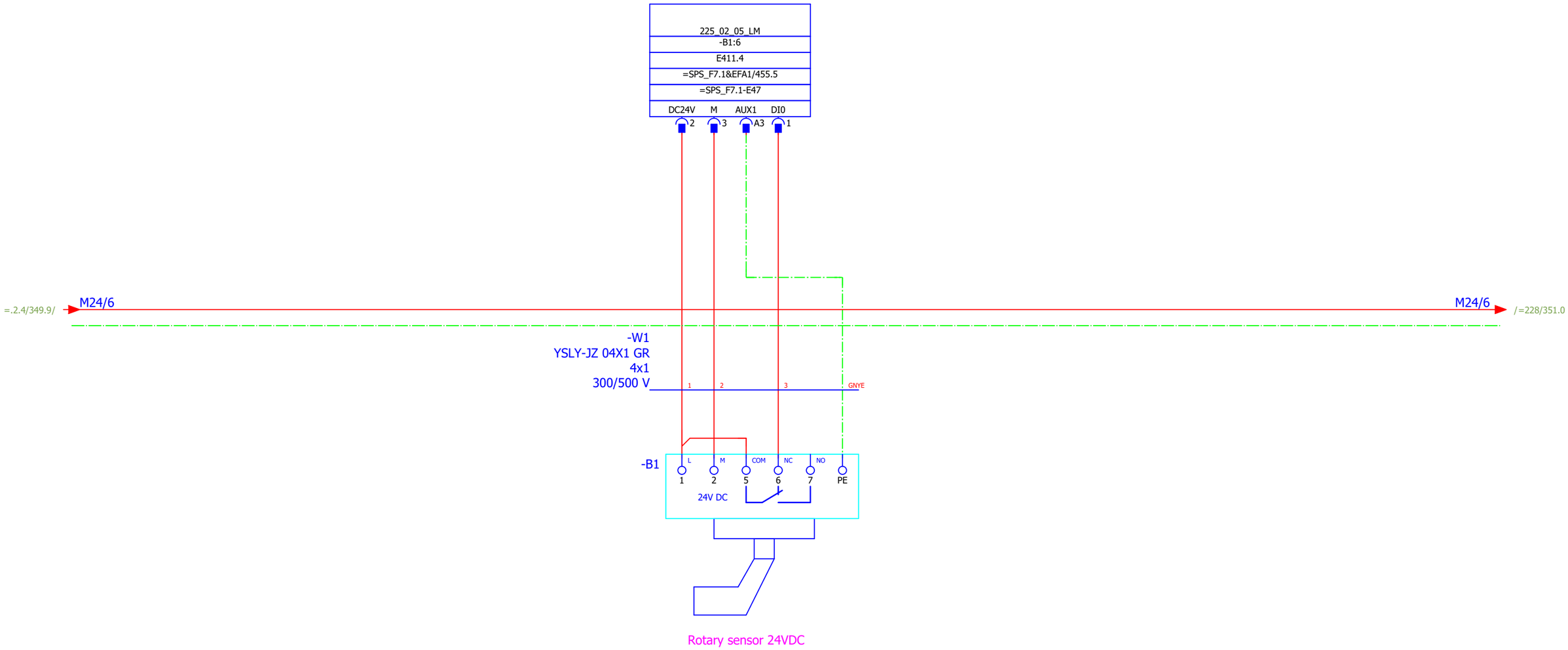
225_02_05_LM
-B1:6
E411.4
=SPS_F7.1&EFA1/455.5
=SPS_F7.1-E47
DC24V
M
AUX1
DI0
2
3
A3
1
=.2.4/349.9/
M24/6
M24/6
/=228/351.0
-W1
YSLY-JZ 04X1 GR
4x1
300/500 V
1
2
3
GNYE
-B1
L
M
COM
NC
NO
1
2
5
6
7
PE
24V DC
Rotary sensor 24VDC

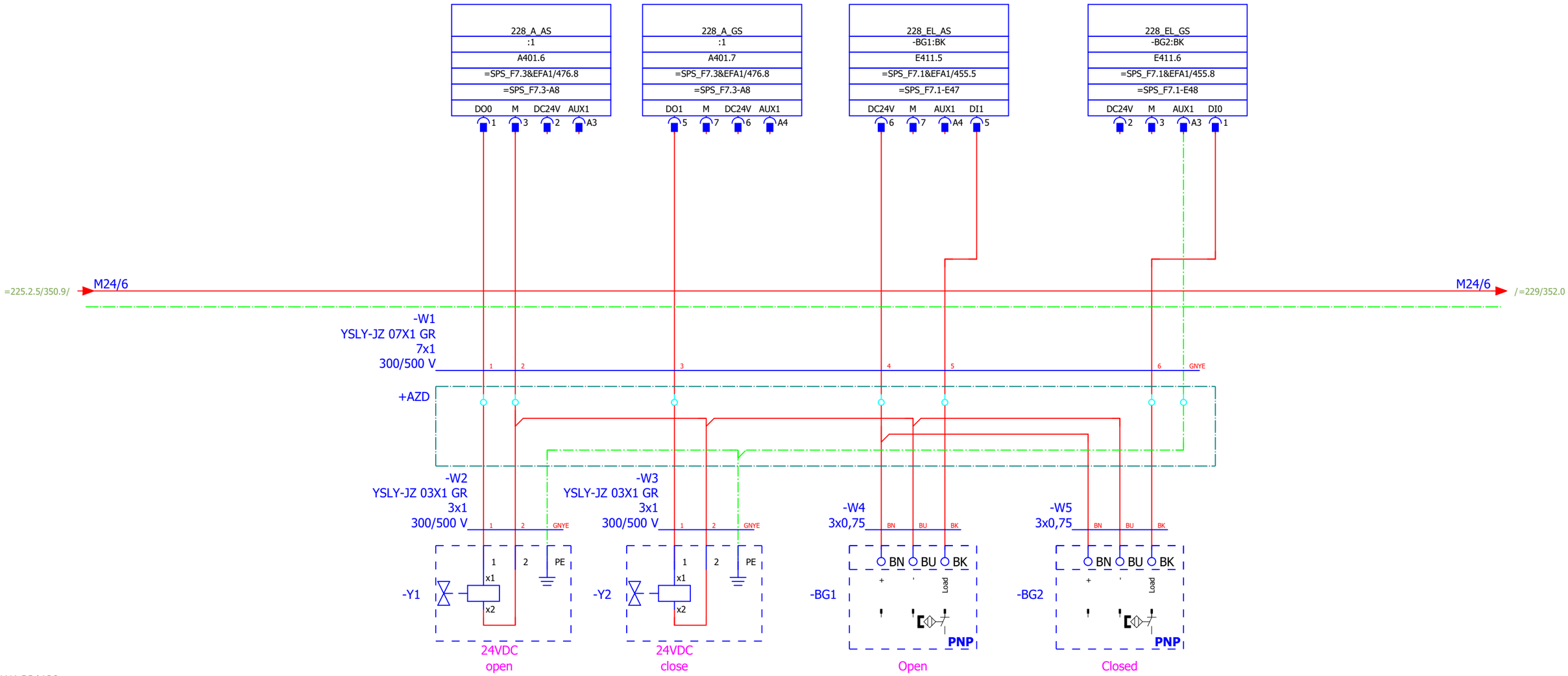

=227+WAG3/489

=229/352

			Date	12.12.2019	Mixed feed plant Golden Poultry	BEYTEC ... your gateway to success	Flap	= 228	
			Ed.	willen				+ F27	
			Appr		field 7 external signals			1 : 1 Part II	Page 351
Modification	Date	Name	Original	V:\EPLAN\Projekte\Company\Replace\Beytec\2018\Feed Mill Alssad.elk	Replaced by				Page 605

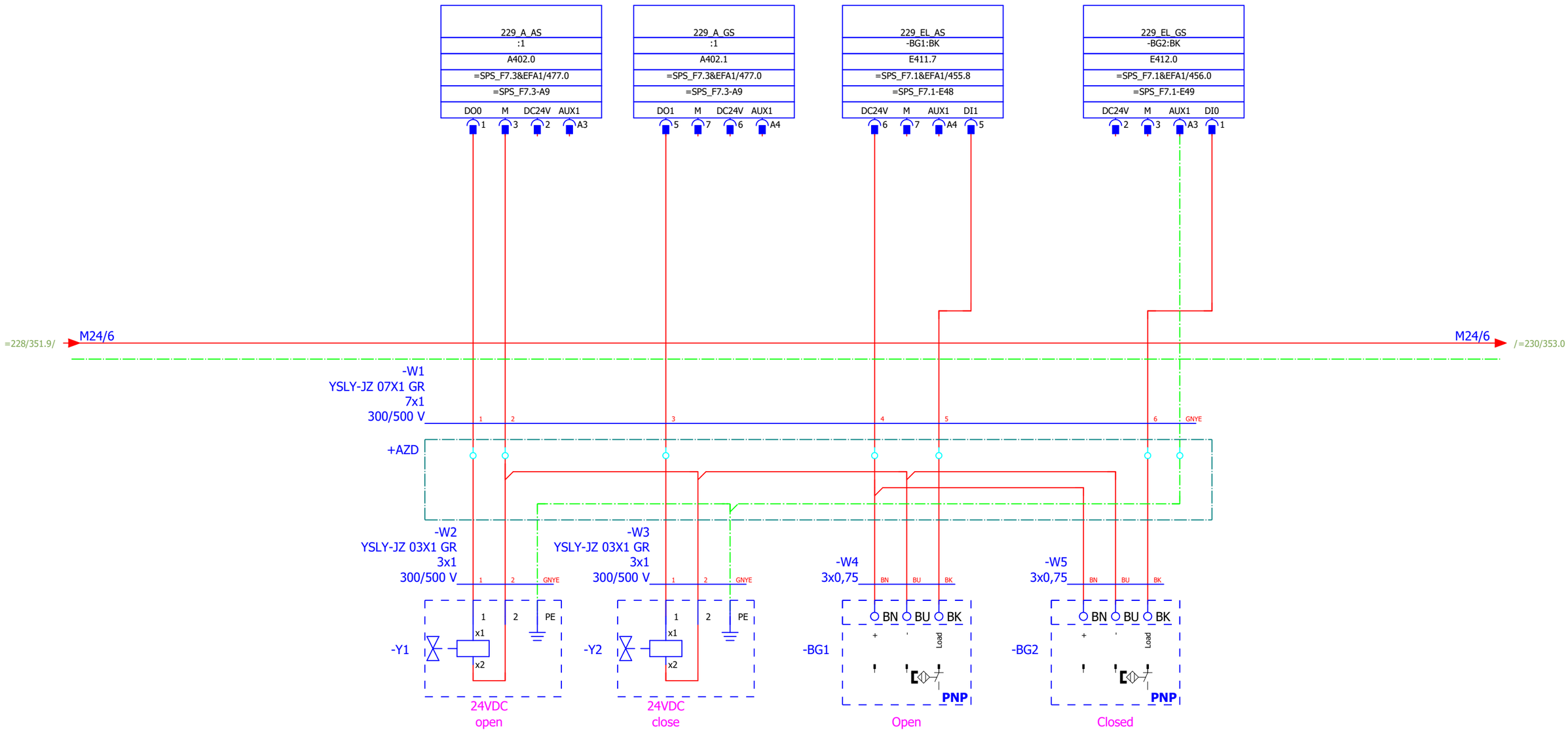

=228/351

=230/353

			Date	12.12.2019	Mixed feed plant Golden Poultry	BEYTEC ... your gateway to success	Flap	= 229	
			Ed.	willen				+ F27	
			Appr		field 7 external signals			1 : 1 Part II	Page 352
Modification	Date	Name	Original	V:\EPLAN\Projekte\Company\Replace\Beytec\2018\Feed Mill Alssad.elk		Replaced by			Page 605

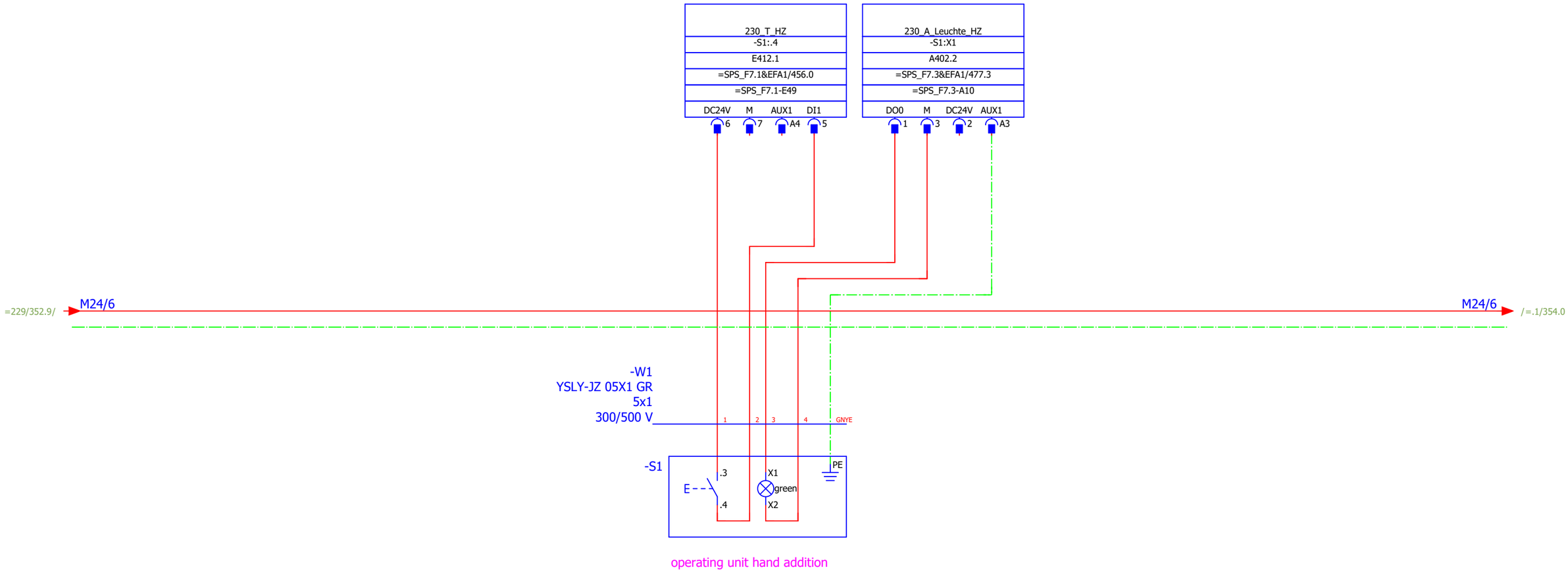

=229/352

=.1/354

			Date	12.12.2019	Mixed feed plant Golden Poultry	BEYTEC ... your gateway to success	Hand addition	= 230	
			Ed.	willen				+ F27	
			Appr		field 7 external signals			1 : 1 / Part II	Page 353
Modification	Date	Name	Original	V:\EPLAN\Projekte\Company\Replace\Beytec\2018\Feed Mill Alssad.elk	Replaced by				Page 605

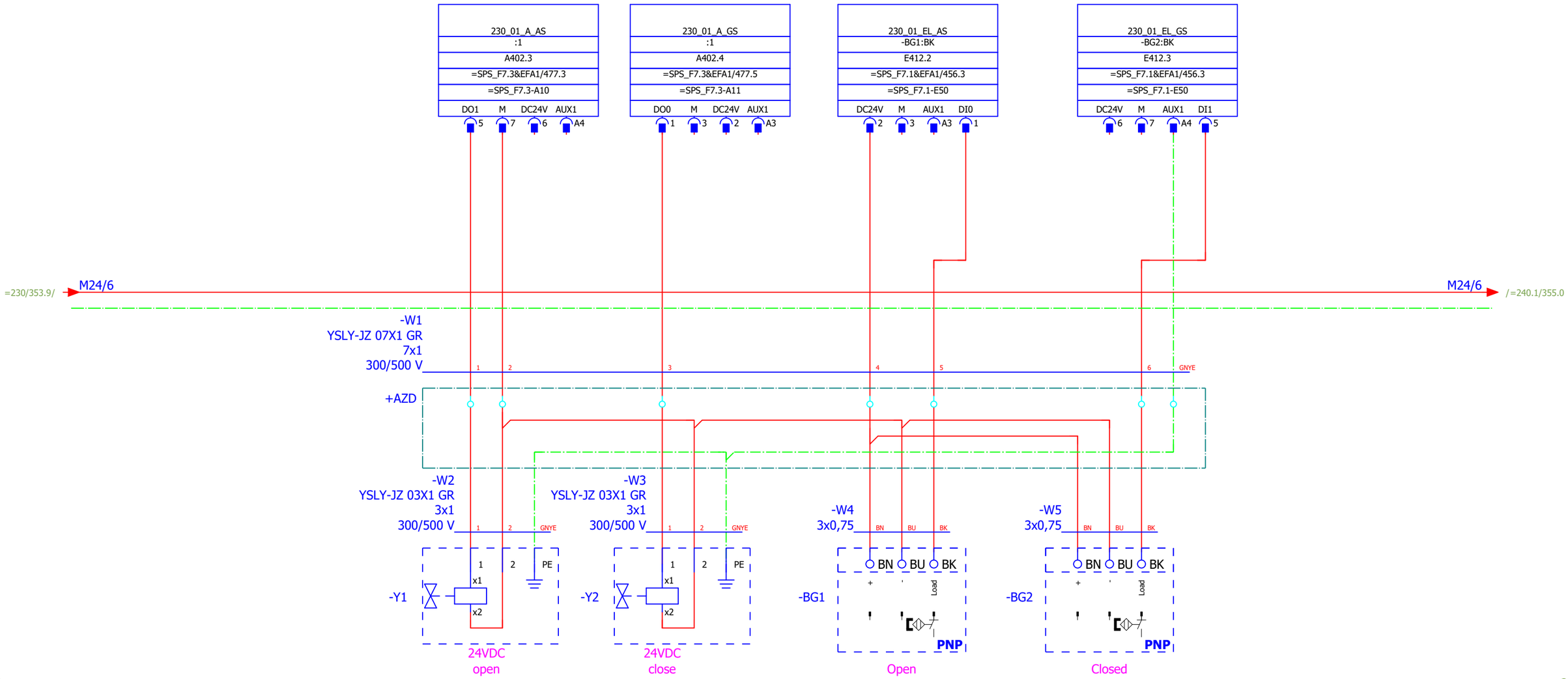

=230/353

=240.1/355

			Date	12.12.2019	Mixed feed plant Golden Poultry	BEYTEC ... your gateway to success	Flap	= 230.1	
			Ed.	willen				+ F27	
			Appr		field 7 external signals			1 : 1 Part II	Page 354
Modification	Date	Name	Original	V:\EPLAN\Projekte\Company\Replace\Beytec\2018\Feed Mill Alssad.elk		Replaced by			Page 605

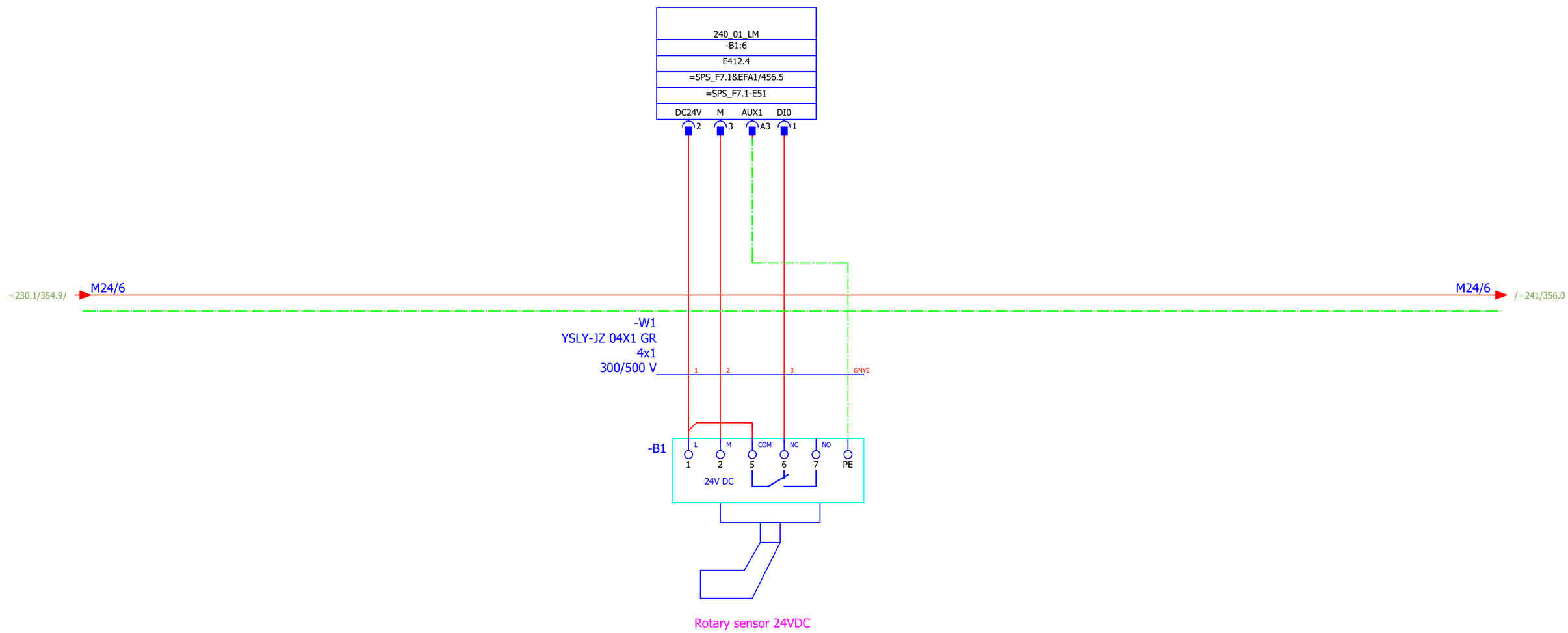

			Date	12.12.2019	Mixed feed plant Golden Poultry	BEYTEC ... your gateway to success	low-level indicator		= 240.1	
			Ed.	willen					+ F27	
			Appr		field 7 external signals			1 : 1	Part II	Page 355
Modification	Date	Name	Original	V:\EPLAN\Projekte\Company\Plans\Beytec\2018\Feed Mill Alssad.elk	Replaced by					Page 605

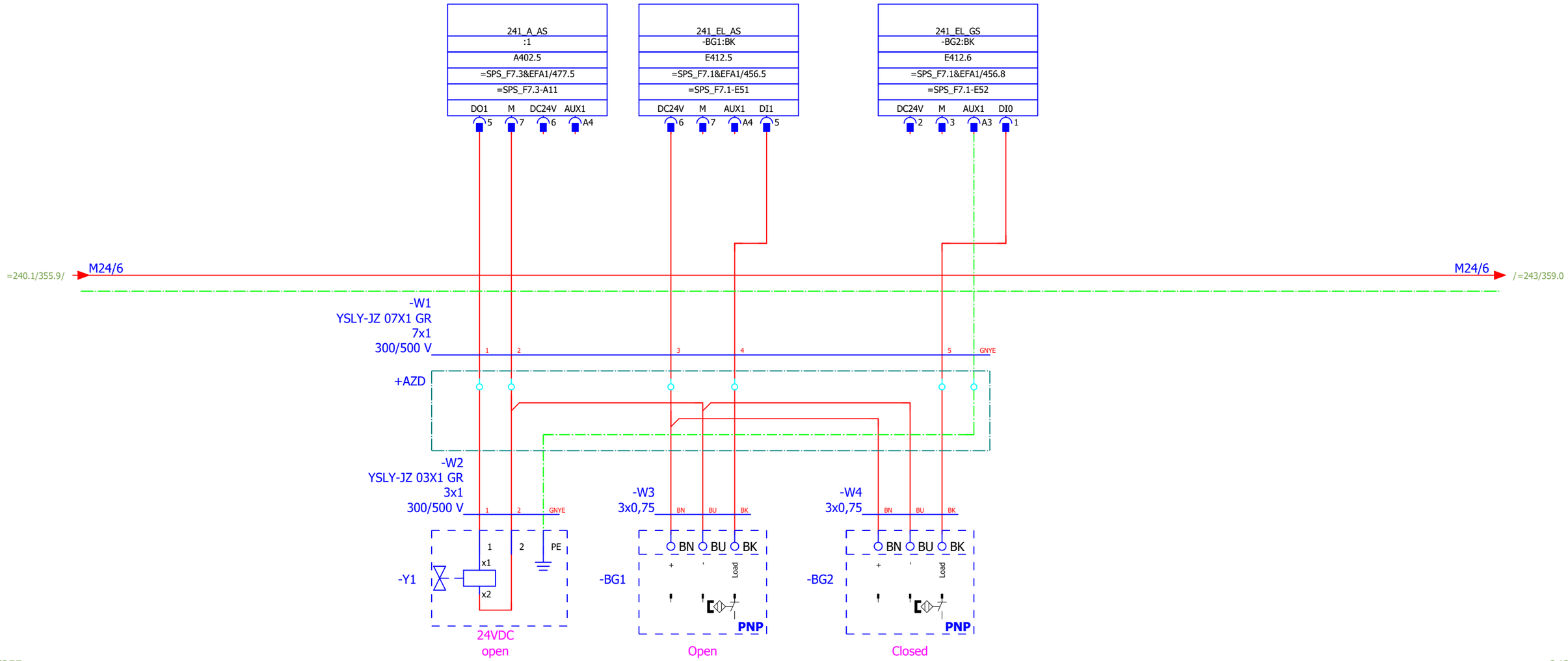

=240.1/355

=242+F24/127

			Date	12.12.2019	Mixed feed plant Golden Poultry	BEYTEC ... your gateway to success	Head slider	= 241	
			Ed.	willen				+ F27	
			Appr		field 7 external signals			1 : 1 Part II	Page 356
Modification	Date	Name	Original	V:\EPLAN\Projekte\Company\Replace\Beytec\2018\Feed Mill Alssad.elk	Replaced by				Page 605

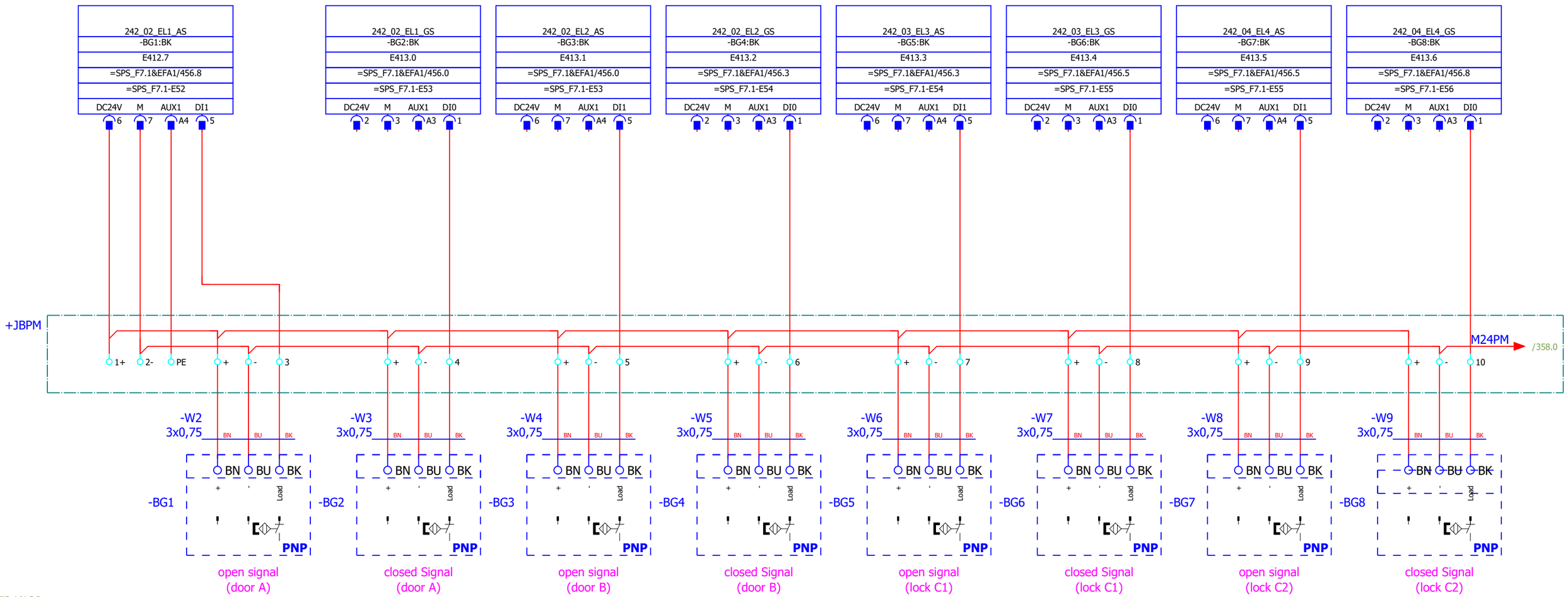
242_02_EL1_AS
-BG1:BK
E412.7
=SPS_F7.1&EFA1/456.8
=SPS_F7.1-E52
DC24V M AUX1 DI1
242_02_EL1_GS
-BG2:BK
E413.0
=SPS_F7.1&EFA1/456.0
=SPS_F7.1-E53
DC24V M AUX1 DI0
242_02_EL2_AS
-BG3:BK
E413.1
=SPS_F7.1&EFA1/456.0
=SPS_F7.1-E53
DC24V M AUX1 DI1
242_02_EL2_GS
-BG4:BK
E413.2
=SPS_F7.1&EFA1/456.3
=SPS_F7.1-E54
DC24V M AUX1 DI0
242_03_EL3_AS
-BG5:BK
E413.3
=SPS_F7.1&EFA1/456.3
=SPS_F7.1-E54
DC24V M AUX1 DI1
242_03_EL3_GS
-BG6:BK
E413.4
=SPS_F7.1&EFA1/456.5
=SPS_F7.1-E55
DC24V M AUX1 DI0
242_04_EL4_AS
-BG7:BK
E413.5
=SPS_F7.1&EFA1/456.5
=SPS_F7.1-E55
DC24V M AUX1 DI1
242_04_EL4_GS
-BG8:BK
E413.6
=SPS_F7.1&EFA1/456.8
=SPS_F7.1-E56
DC24V M AUX1 DI0
+JBPM
1+ 2- PE + - 3 + - 4 + - 5 + - 6 + - 7 + - 8 + - 9 + - 10
M24PM
/358.0
-W2 3x0,75
-W3 3x0,75
-W4 3x0,75
-W5 3x0,75
-W6 3x0,75
-W7 3x0,75
-W8 3x0,75
-W9 3x0,75
BN BU BK
-BG1
-BG2
-BG3
-BG4
-BG5
-BG6
-BG7
-BG8
Load
PNP
open signal (door A)
closed Signal (door A)
open signal (door B)
closed Signal (door B)
open signal (lock C1)
closed Signal (lock C1)
open signal (lock C2)
closed Signal (lock C2)

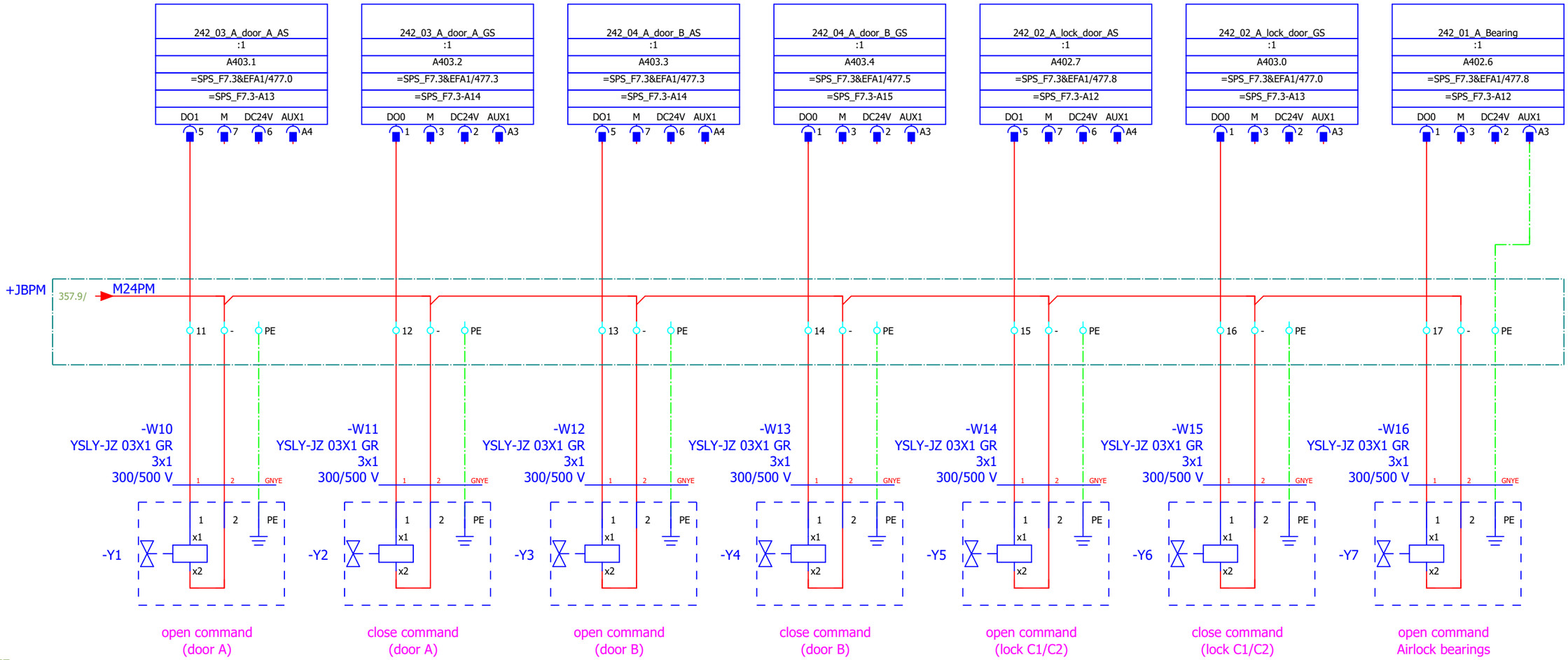

357

=243+F24/130

			Date	12.12.2019	Mixed feed plant Golden Poultry	BEYTEC ... your gateway to success	Mixer	= 242
			Ed.	willen	field 7 external signals			+ F27
			Appr				1 : 1	Part II
Modification	Date	Name	Original	V:\EPLAN\Projekte\Company\Beytec\2018\Feed Mill Alssad.elk	Replaced by			Page 358
								Page 605

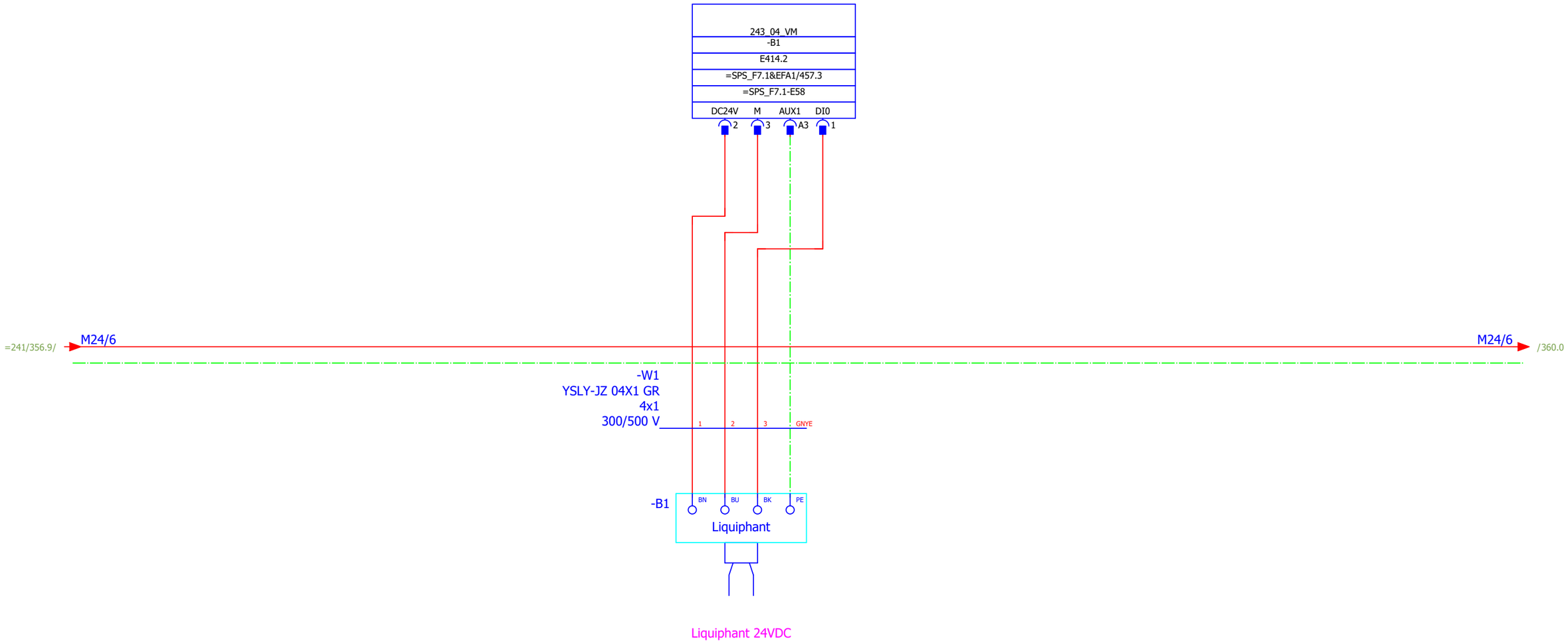
243_04_VM
-B1
E414.2
=SPS_F7.1&EFA1/457.3
=SPS_F7.1-E58
DC24V
M
AUX1
DI0
2
3
A3
1
=241/356.9/
M24/6
M24/6
/360.0
-W1
YSLY-JZ 04X1 GR
4x1
300/500 V
1
2
3
GNYE
-B1
BN
BU
BK
PE
Liquiphant
Liquiphant 24VDC

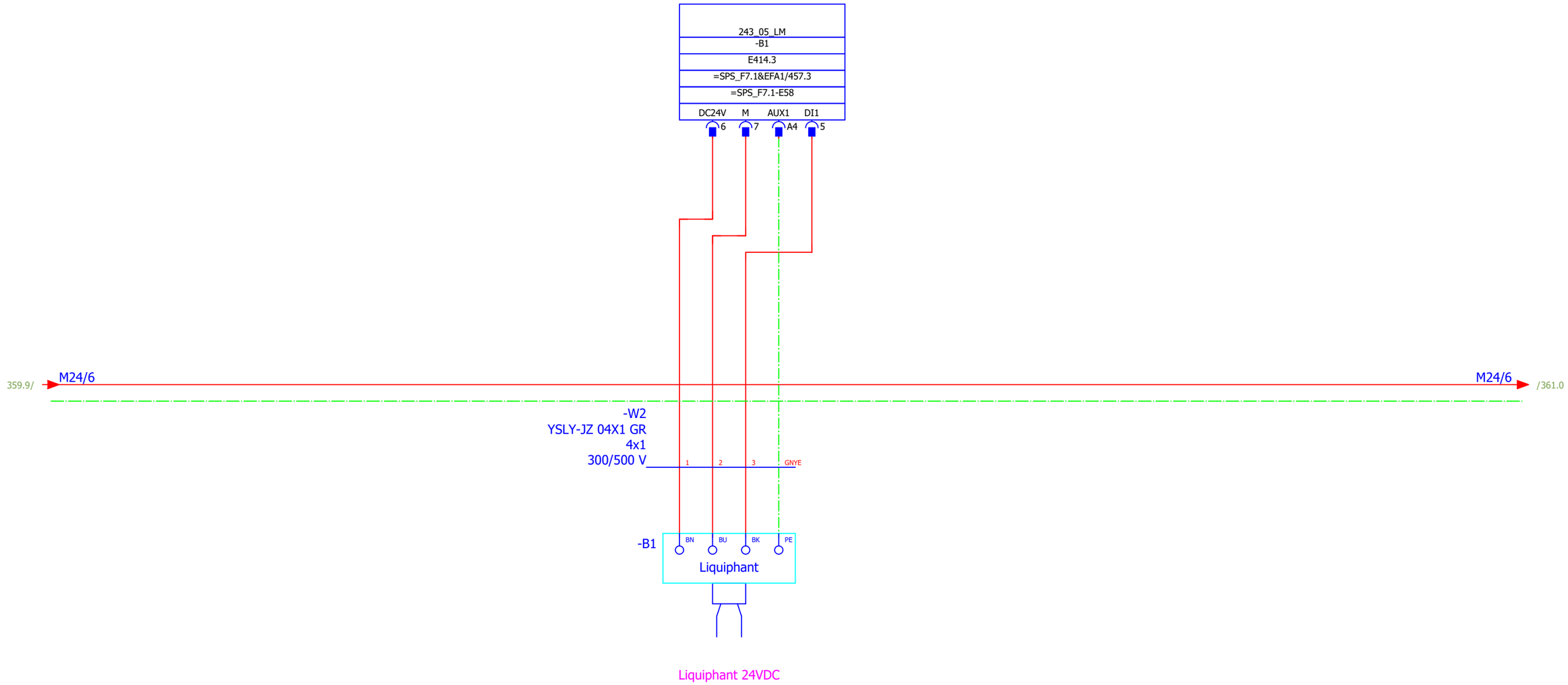

			Date	12.12.2019	Mixed feed plant Golden Poultry	BEYTEC ... your gateway to success	low-level indicator	= 243	
			Ed.	willen				+ F27	
			Appr		field 7 external signals			1 : 1 / Part II	Page 360
Modification	Date	Name	Original	V:\EPLAN\Projekte\Company\Replace\Beytec\2018\Feed Mill Alssad.elk	Replaced by				Page 605

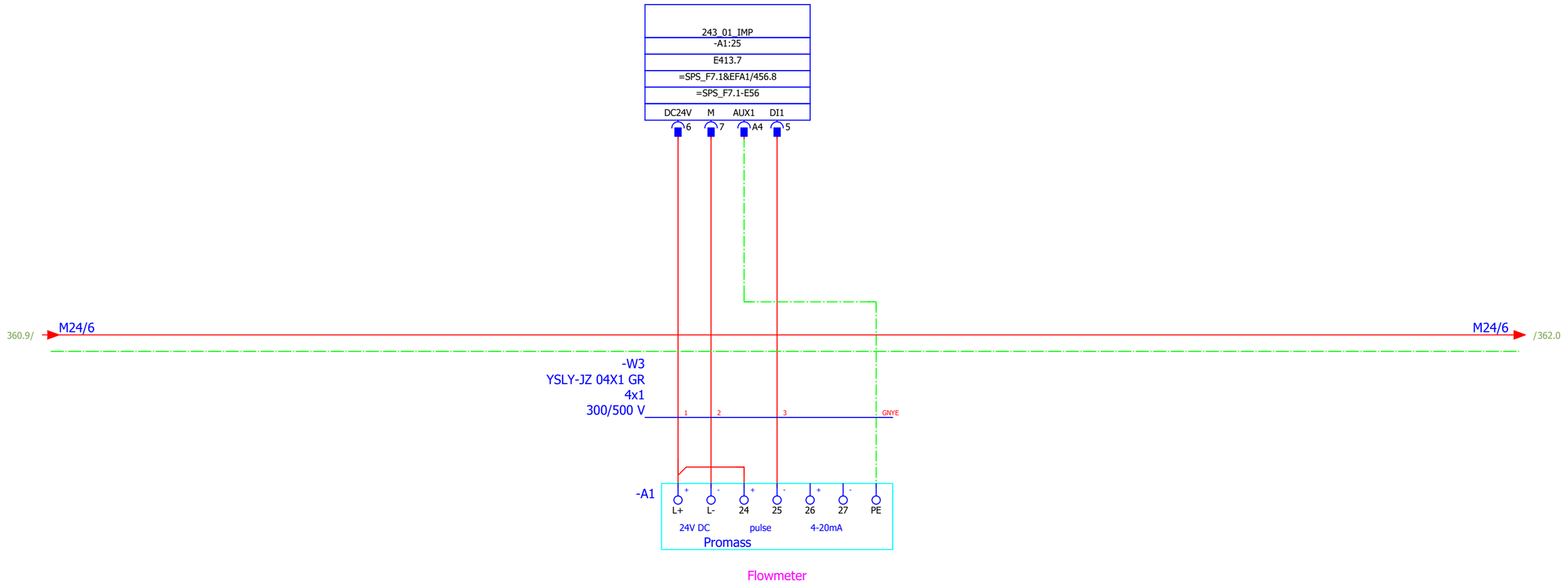

			Date	12.12.2019	Mixed feed plant Golden Poultry	BEYTEC ... your gateway to success	Flowmeter
			Ed.	willen	field 7 external signals		
			Appr				
Modification	Date	Name	Original	V:\EPLAN\Projekte\Company\Replace\Beytec\2018\Feed Mill Alssad.elk	Replaced by		

= 243
+ F27
1 : 1
Part II
Page 361
Page 605

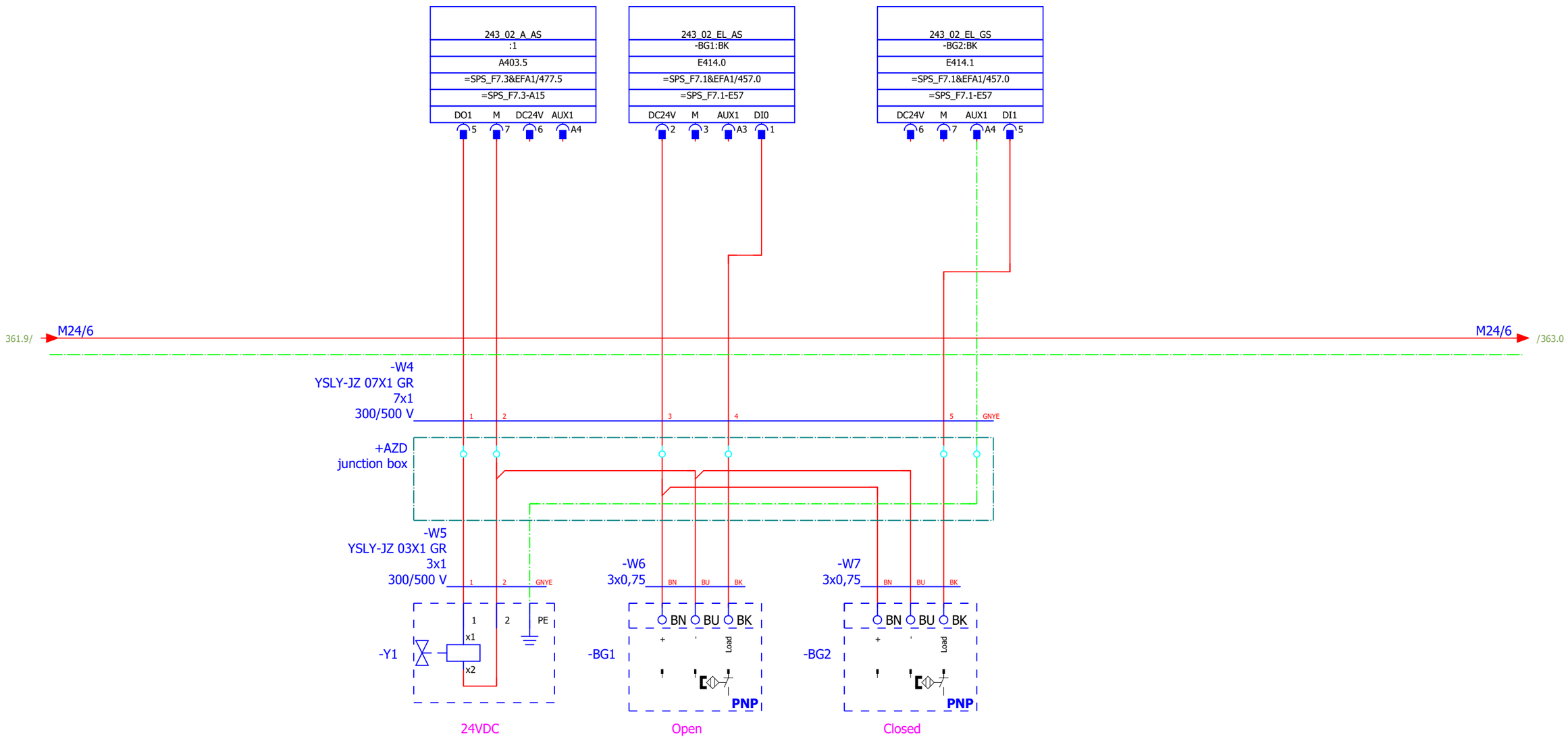

361 363

			Date	12.12.2019	Mixed feed plant Golden Poultry	BEYTEC ... your gateway to success	Pneumatic shut-off valve	= 243	
			Ed.	willen				+ F27	
			Appr		field 7 external signals			1 : 1 / Part II	Page 362
Modification	Date	Name	Original	V:\EPLAN\Projekte\Company\Replace\Beytec\2018\Feed Mill Alssad.elk	Replaced by				Page 605

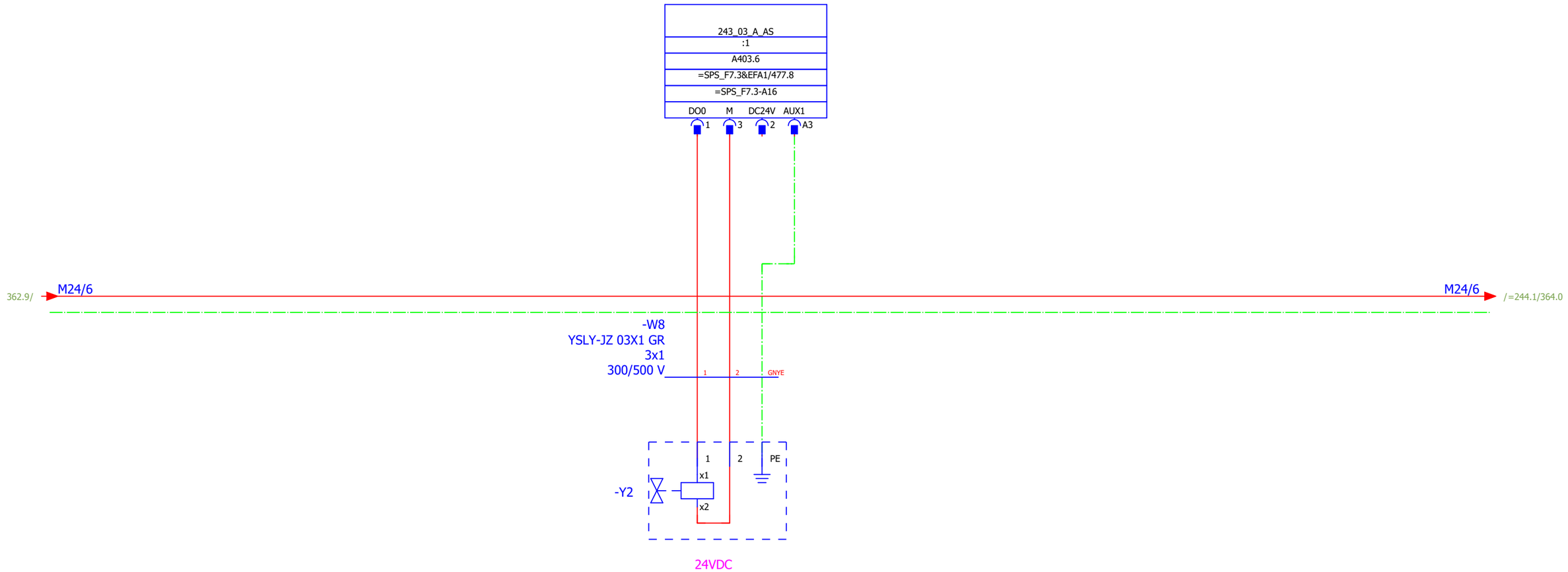

			Date	12.12.2019	Mixed feed plant Golden Poultry	BEYTEC ... your gateway to success	Pneumatic blow-off valve
			Ed.	willen	field 7 external signals		
			Appr				
Modification	Date	Name	Original	V:\EPLAN\Projekte\Company\Replace\Beytec\2018\Feed Mill Alssad.elk	Replaced by		

= 243		
+ F27		
1 : 1	Part II	Page 363
		Page 605

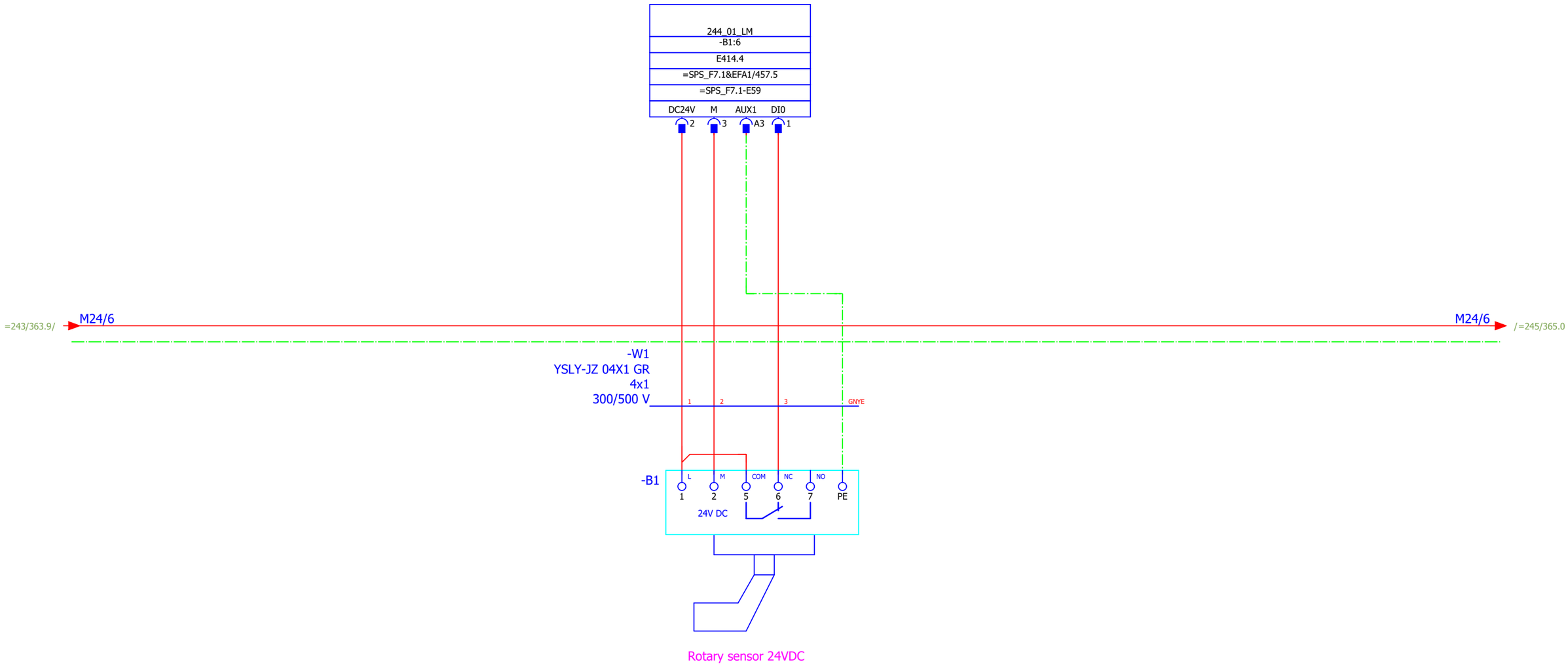

			Date	12.12.2019	Mixed feed plant Golden Poultry	BEYTEC ... your gateway to success	low-level indicator	= 244.1	
			Ed.	willen				+ F27	
			Appr		field 7 external signals			1 : 1 / Part II	Page 364
Modification	Date	Name	Original	V:\EPLAN\Projekte\Company\Replace\Beytec\2018\Feed Mill Alssad.elk	Replaced by				Page 605

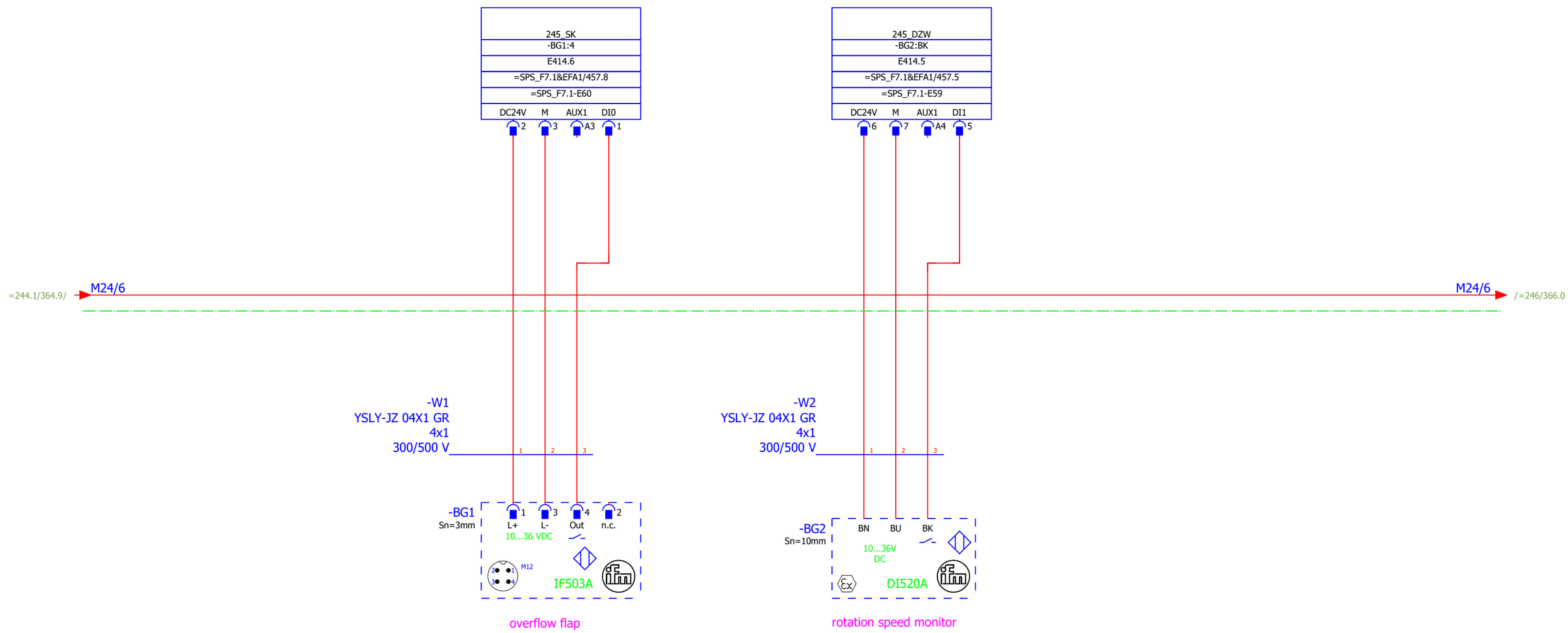
245_SK
-BG1:4
E414.6
=SPS_F7.1&EFA1/457.8
=SPS_F7.1-E60
DC24V M AUX1 DI0
2 3 A3 1
245_DZW
-BG2:BK
E414.5
=SPS_F7.1&EFA1/457.5
=SPS_F7.1-E59
DC24V M AUX1 DI1
6 7 A4 5
=244.1/364.9/
M24/6
M24/6
/=246/366.0
-W1
YSLY-JZ 04X1 GR
4x1
300/500 V
-W2
YSLY-JZ 04X1 GR
4x1
300/500 V
-BG1
Sn=3mm
L+ L- Out n.c.
10...36 VDC
M12
IF503A
overflow flap
-BG2
Sn=10mm
BN BU BK
10...36V
DC
DI520A
rotation speed monitor

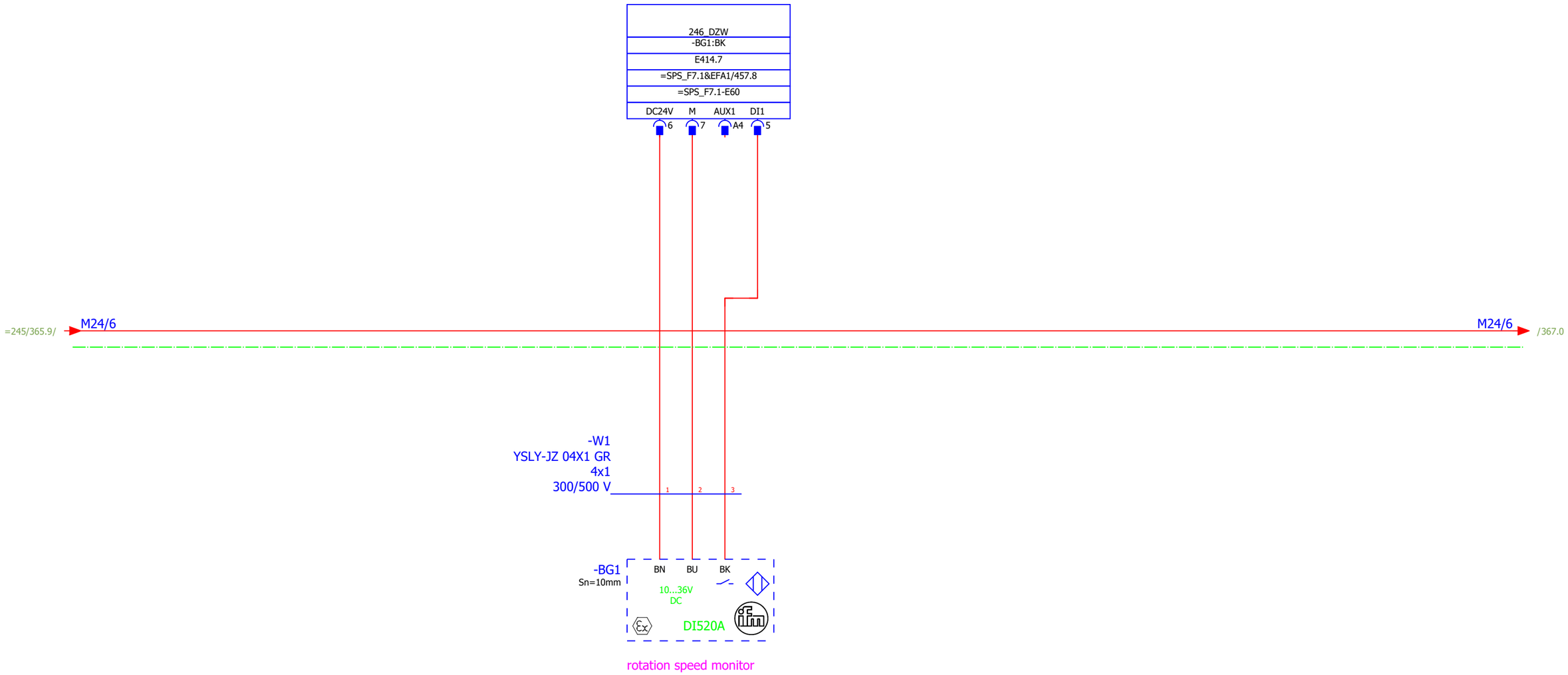

			Date	12.12.2019	Mixed feed plant Golden Poultry	BEYTEC ... your gateway to success	elevator rpm	= 246	
			Ed.	willen				+ F27	
			Appr		field 7 external signals			1 : 1 / Part II	Page 366
Modification	Date	Name	Original	V:\EPLAN\Projekte\Company\Replace\Beytec\2018\Feed Mill Alssad.elk	Replaced by				Page 605

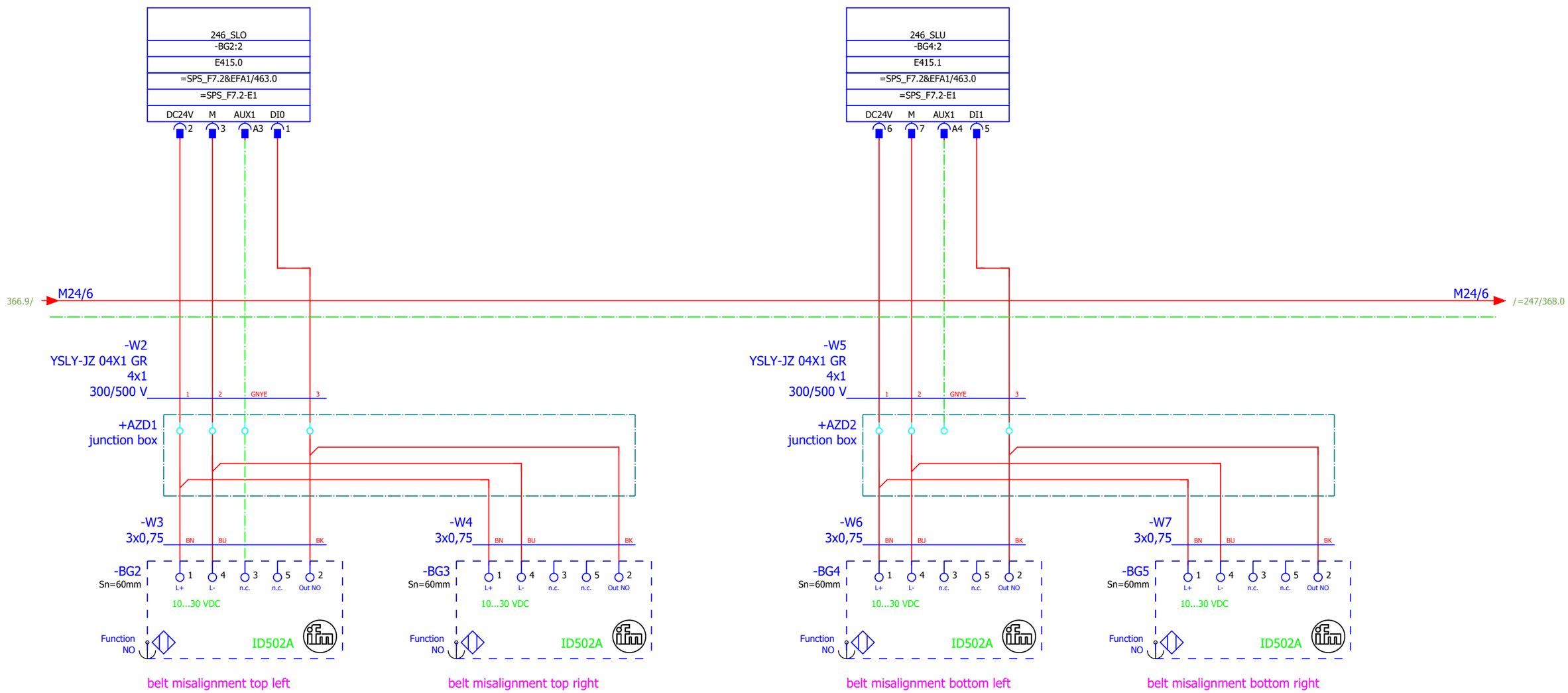

=247+F24/134

			Date	12.12.2019	Mixed feed plant Golden Poultry	BEYTEC ... your gateway to success	elevator belt misalignment	= 246	
			Ed.	willen				+ F27	
			Appr		field 7 external signals			1 : 1 Part II	Page 367
Modification	Date	Name	Original	V:\EPLAN\Projekte\Company\Replace\Beytec\2018\Feed Mill Alssad.elk	Replaced by				Page 605

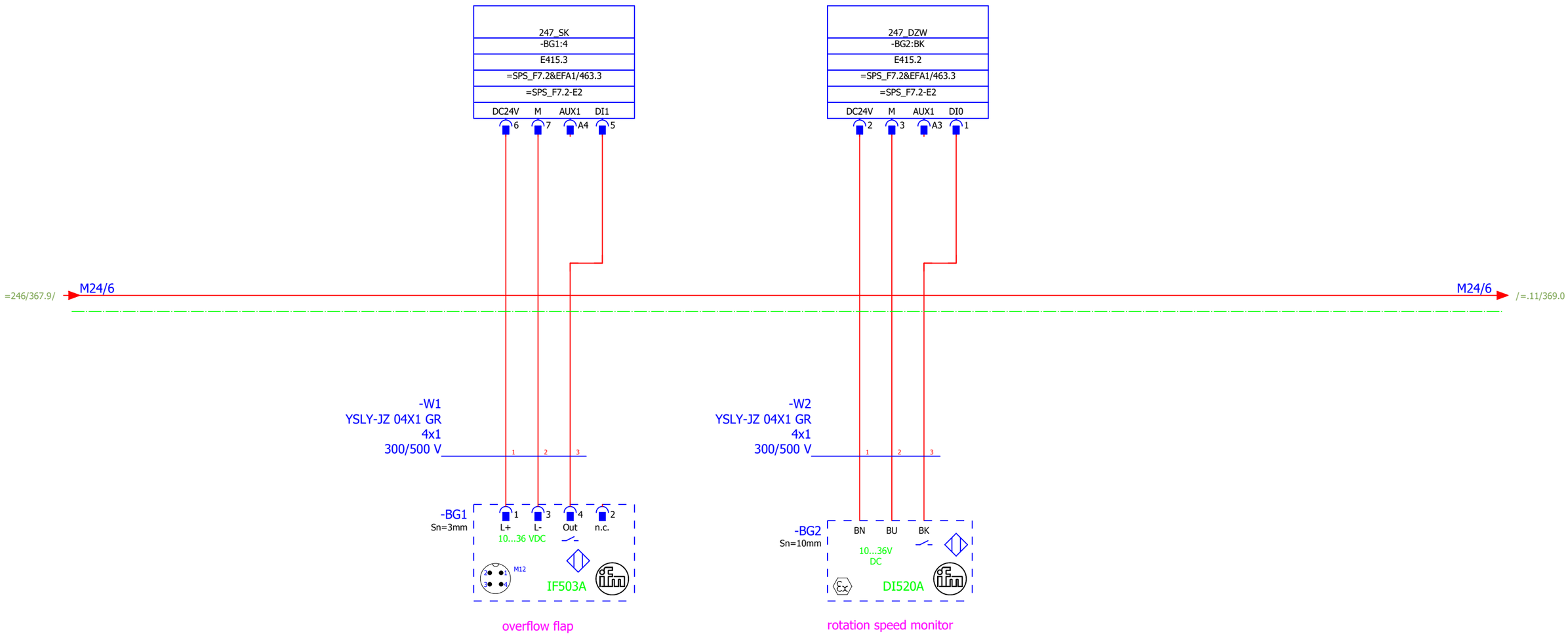

			Date	12.12.2019	Mixed feed plant Golden Poultry	BEYTEC	overflow flap & rotation speed monitor	= 247	
			Ed.	willen		... your gateway to success		+ F27	
			Appr		field 7 external signals		1 : 1	Part II	Page 368
Modification	Date	Name	Original	V:\EPLAN\Projekte\Company\Replaced\Beytec\2018\Feed Mill Alssad.elk	Replaced by				Page 605

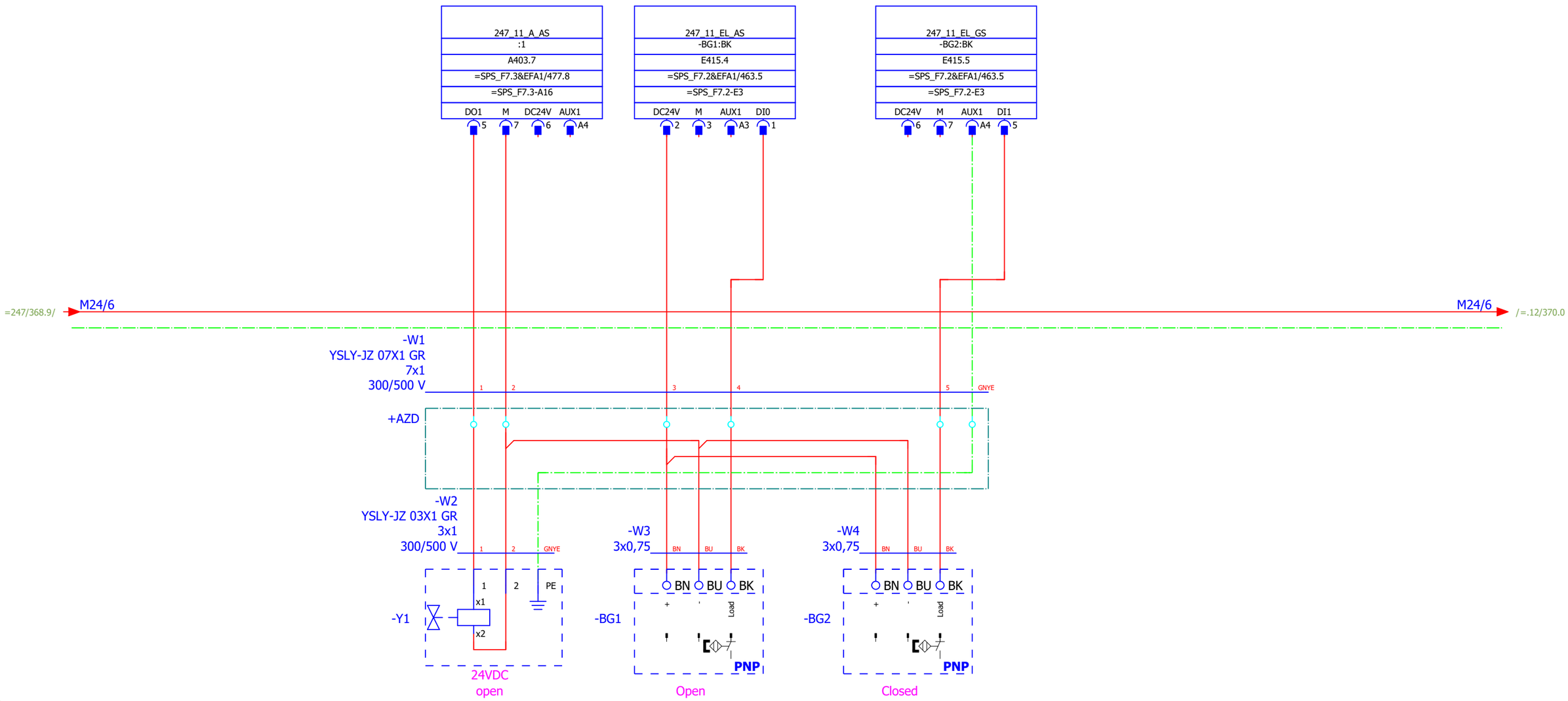

=247/368

=.12/370

			Date	12.12.2019	Mixed feed plant Golden Poultry	BEYTEC ... your gateway to success	pneumatic slide	= 247.11	
			Ed.	willen				+ F27	
			Appr		field 7 external signals			1 : 1	Part II
Modification	Date	Name	Original	V:\EPLAN\Projekte\Company\Replace\Beytec\2018\Feed Mill Alssad.elk	Replaced by			Page 369	Page 605

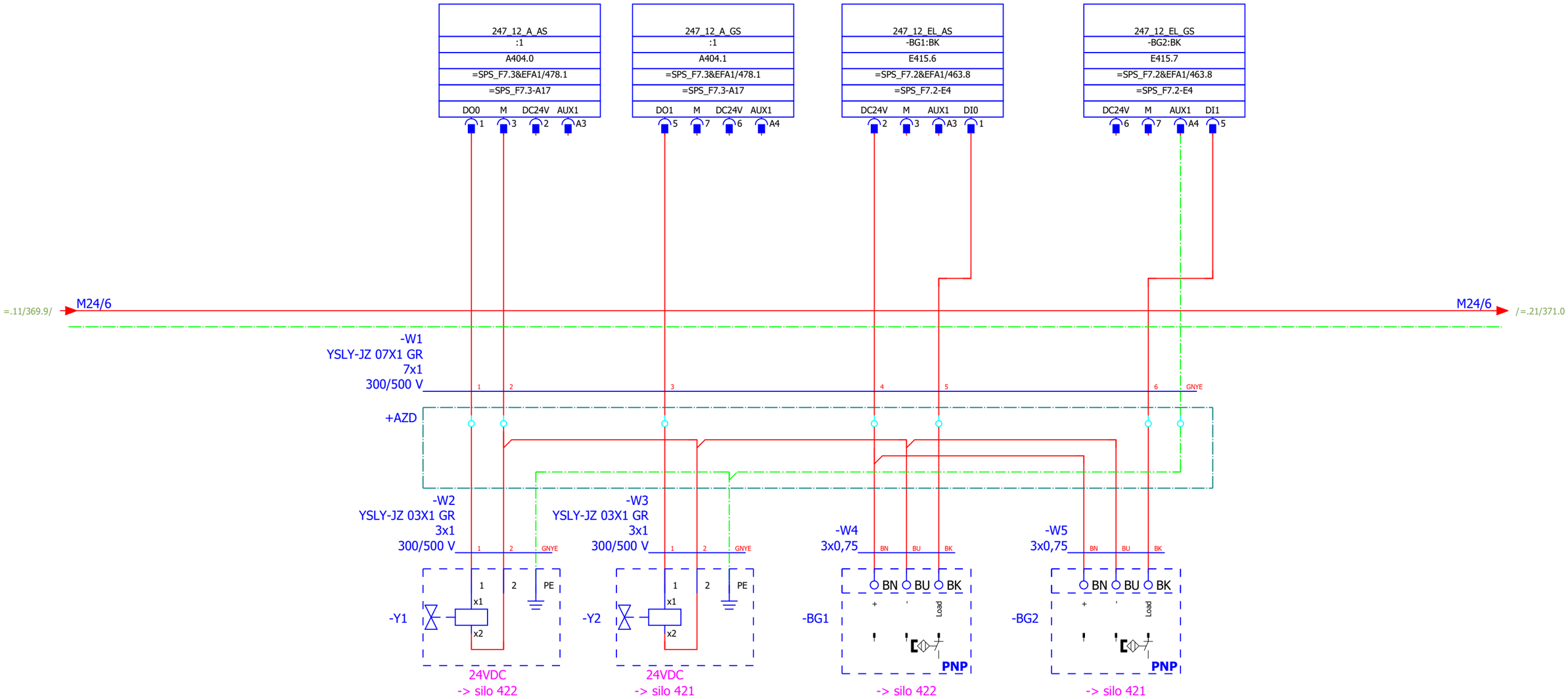

			Date	12.12.2019	Mixed feed plant Golden Poultry	BEYTEC ... your gateway to success	Flap box	= 247.12
			Ed.	willen				+ F27
			Appr		field 7 external signals		1 : 1	Part II
Modification	Date	Name	Original	V:\EPLAN\Projekte\Company\Beytec\2018\Feed Mill Alssad.elk	Replaced by			Page 370 / Page 605

Replaced by

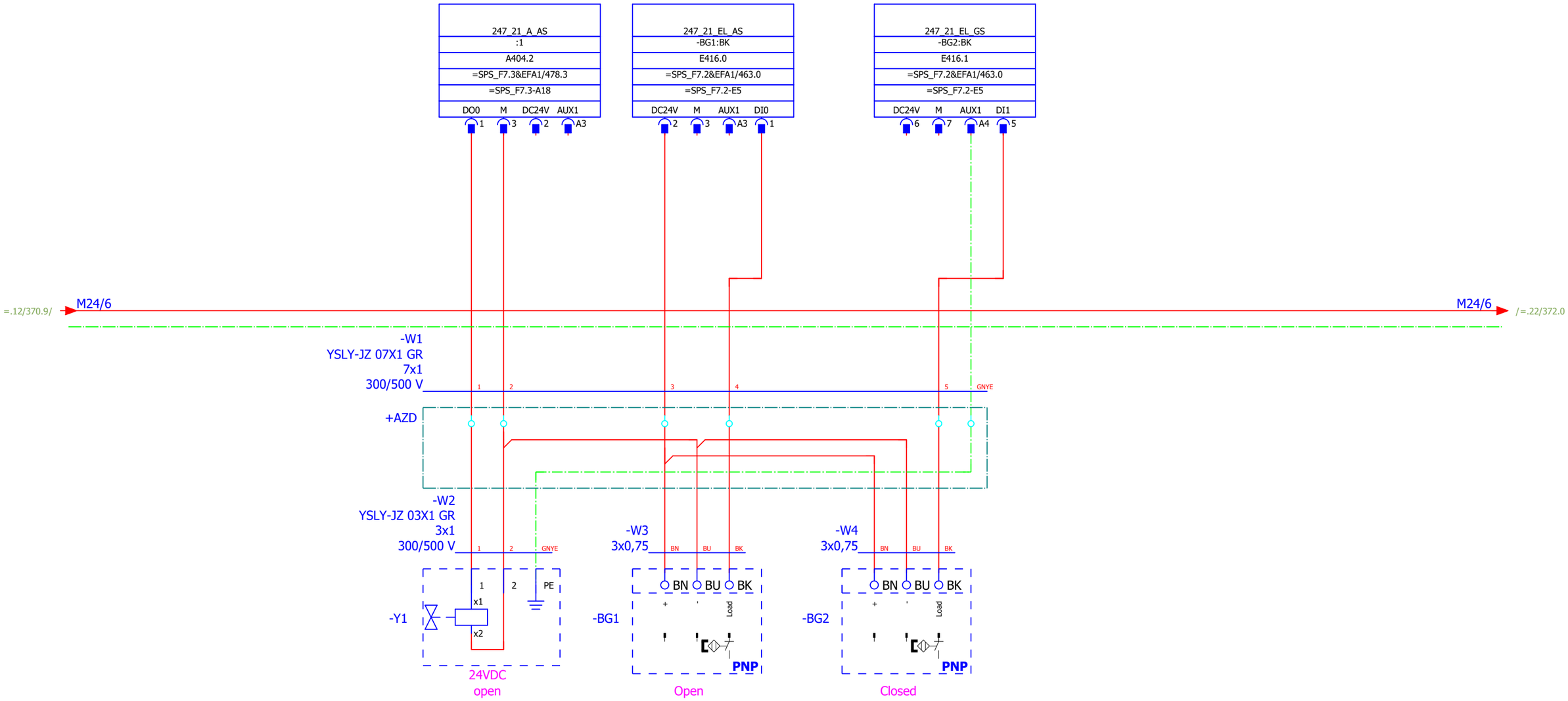

			Date	12.12.2019	Mixed feed plant Golden Poultry	BEYTEC	pneumatic slide			= 247.21	
			Ed.	willen						+ F27	
			Appr		field 7 external signals			1 : 1	Part II	Page 371	
Modification	Date	Name	Original	V:\EPLAN\Projekte\Company\Replace\Beytec\2018\Feed Mill Alssad.elk	Replaced by	... your gateway to success				Page 605	

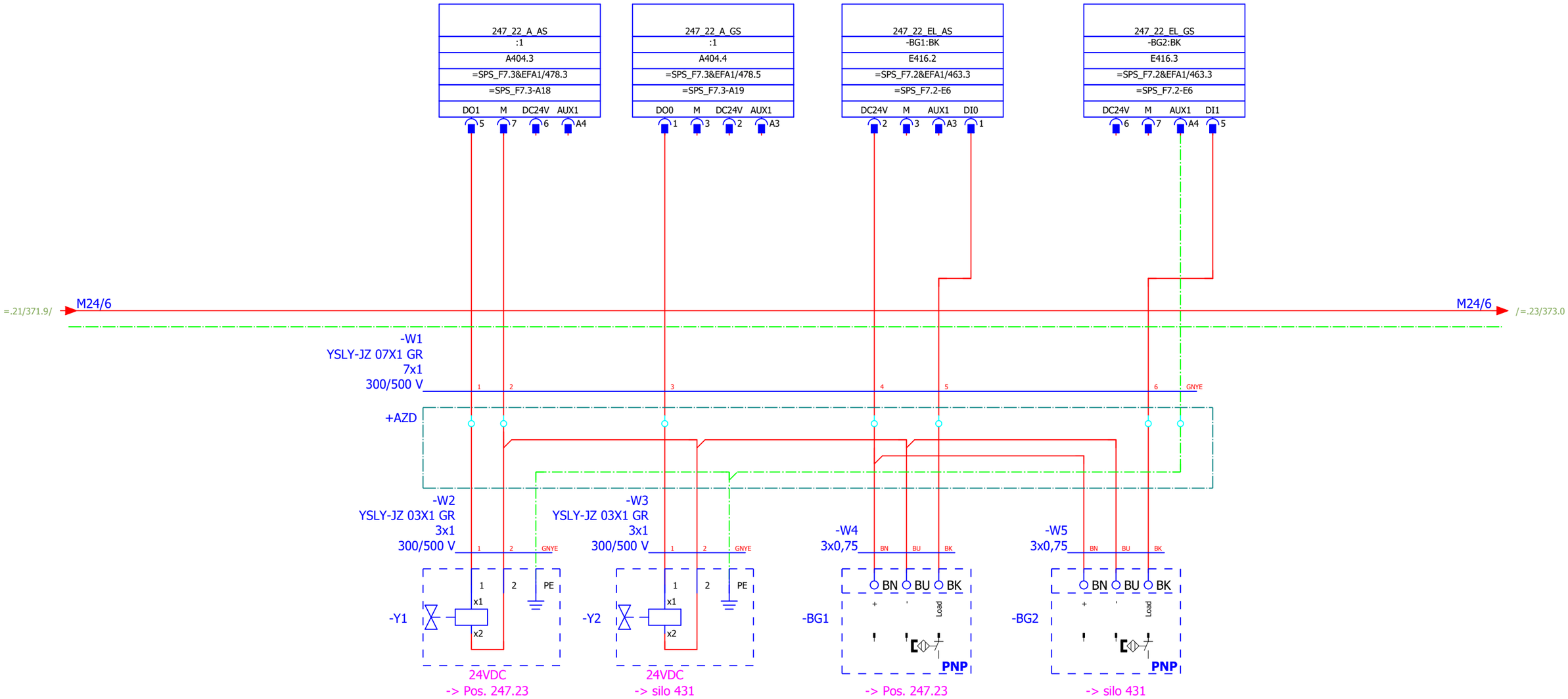
247_22_A_AS
:1
A404.3
=SPS_F7.3&EFA1/478.3
=SPS_F7.3-A18
DO1 M DC24V AUX1
5 7 6 A4
247_22_A_GS
:1
A404.4
=SPS_F7.3&EFA1/478.5
=SPS_F7.3-A19
DO0 M DC24V AUX1
1 3 2 A3
247_22_EL_AS
-BG1:BK
E416.2
=SPS_F7.2&EFA1/463.3
=SPS_F7.2-E6
DC24V M AUX1 DI0
2 3 A3 1
247_22_EL_GS
-BG2:BK
E416.3
=SPS_F7.2&EFA1/463.3
=SPS_F7.2-E6
DC24V M AUX1 DI1
6 7 A4 5
=.21/371.9/
M24/6
M24/6
/=.23/373.0
-W1
YSLY-JZ 07X1 GR
7x1
300/500 V
1 2 3 4 5 6 GNYE
+AZD
-W2
YSLY-JZ 03X1 GR
3x1
300/500 V
1 2 GNYE
-W3
YSLY-JZ 03X1 GR
3x1
300/500 V
1 2 GNYE
-W4
3x0,75
BN BU BK
-W5
3x0,75
BN BU BK
-Y1
1 2 PE
x1
x2
24VDC
-> Pos. 247.23
-Y2
1 2 PE
x1
x2
24VDC
-> silo 431
-BG1
BN BU BK
+ ' Load
PNP
-> Pos. 247.23
-BG2
BN BU BK
+ ' Load
PNP
-> silo 431

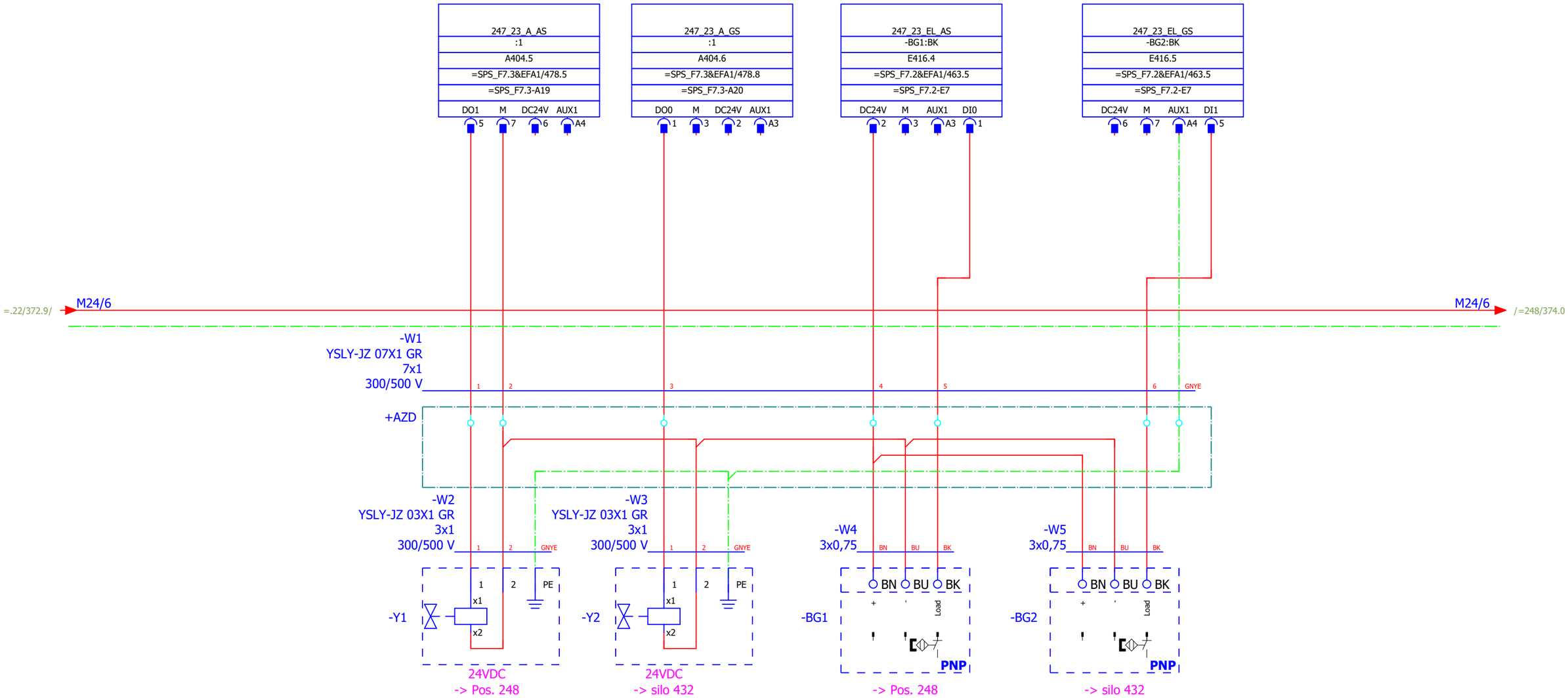
247_23_A_AS
:1
A404.5
=SPS_F7.3&EFA1/478.5
=SPS_F7.3-A19
DO1 M DC24V AUX1
5 7 6 A4
247_23_A_GS
:1
A404.6
=SPS_F7.3&EFA1/478.8
=SPS_F7.3-A20
DO0 M DC24V AUX1
1 3 2 A3
247_23_EL_AS
-BG1:BK
E416.4
=SPS_F7.2&EFA1/463.5
=SPS_F7.2-E7
DC24V M AUX1 DI0
2 3 A3 1
247_23_EL_GS
-BG2:BK
E416.5
=SPS_F7.2&EFA1/463.5
=SPS_F7.2-E7
DC24V M AUX1 DI1
6 7 A4 5
=.22/372.9/
M24/6
M24/6
/=248/374.0
-W1
YSLY-JZ 07X1 GR
7x1
300/500 V
1 2 3 4 5 6 GNYE
+AZD
-W2
YSLY-JZ 03X1 GR
3x1
300/500 V
1 2 GNYE
-W3
YSLY-JZ 03X1 GR
3x1
300/500 V
1 2 GNYE
-W4
3x0,75
BN BU BK
-W5
3x0,75
BN BU BK
-Y1
1 2 PE
x1
x2
24VDC
-> Pos. 248
-Y2
1 2 PE
x1
x2
24VDC
-> silo 432
-BG1
BN BU BK
+ ' Load
PNP
-> Pos. 248
-BG2
BN BU BK
+ ' Load
PNP
-> silo 432

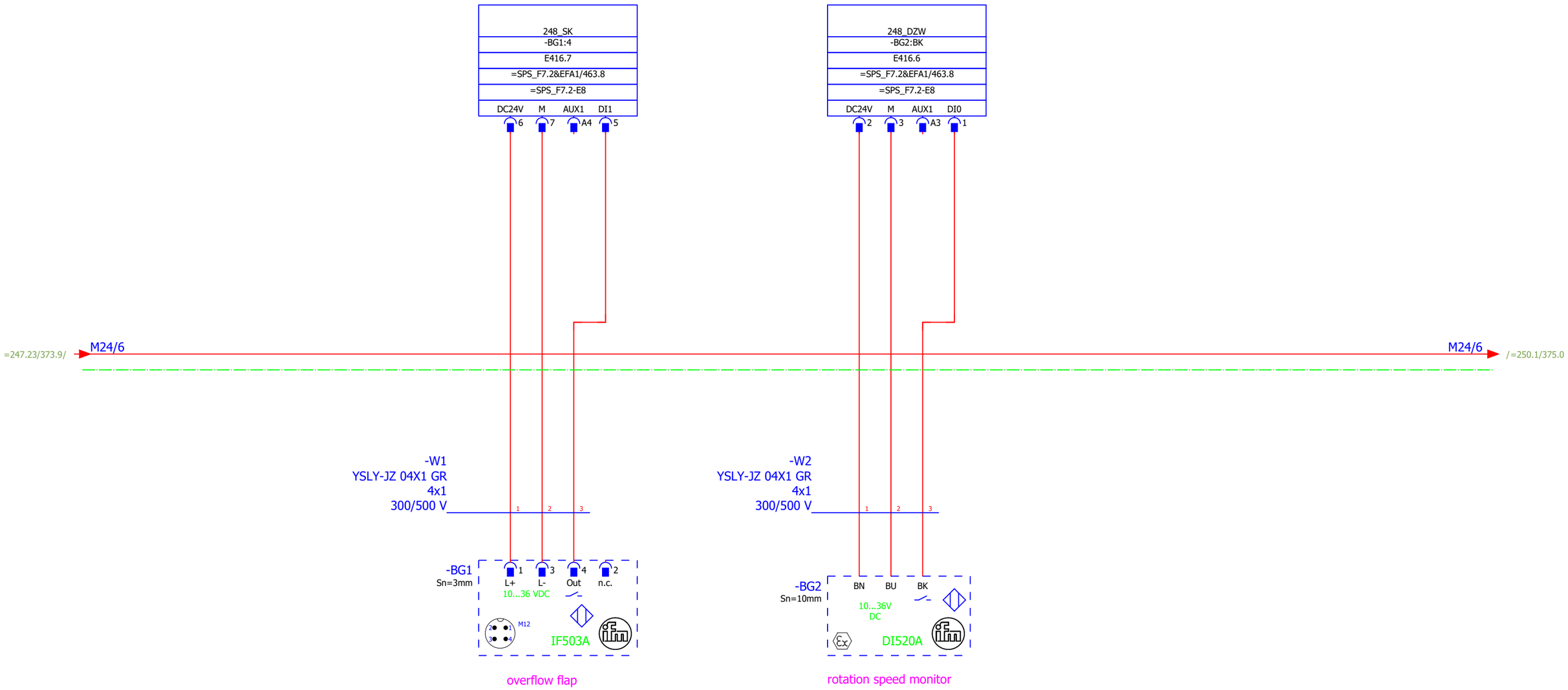

+F24/135

=.1+F24/136

			Date	12.12.2019	Mixed feed plant Golden Poultry	BEYTEC ... your gateway to success	overflow flap & rotation speed monitor	= 248	
			Ed.	willen				+ F27	
			Appr		field 7 external signals			1 : 1 Part II	Page 374
Modification	Date	Name	Original	V:\EPLAN\Projekte\Company\Replace\Beytec\2018\Feed Mill Alssad.elk	Replaced by				Page 605

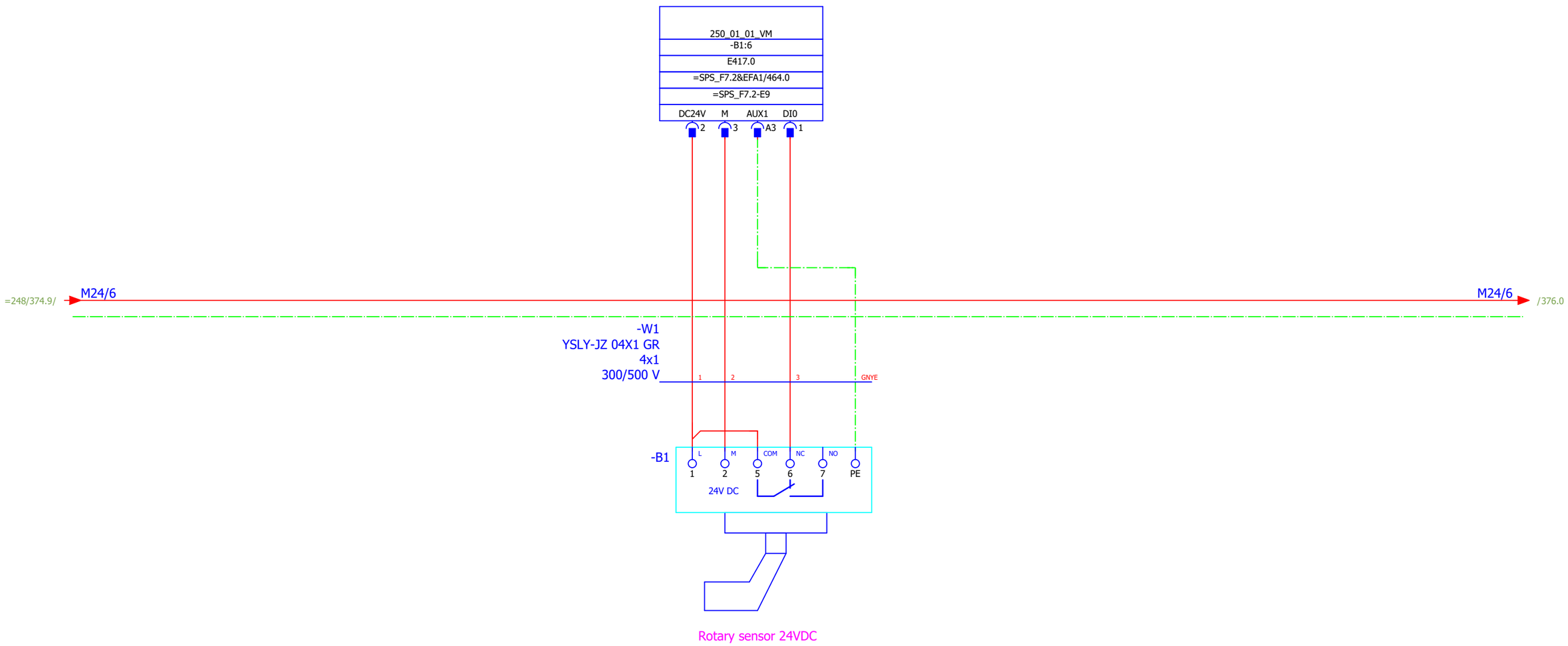

			Date	12.12.2019	Mixed feed plant Golden Poultry	BEYTEC ... your gateway to success	Full Silo 421		= 250.1	
			Ed.	willen					+ F27	
			Appr		field 7 external signals			1 : 1	Part II	Page 375
Modification	Date	Name	Original	V:\EPLAN\Projekte\Company\Alsad\Beytec\2018\Feed Mill Alssad.elk	Replaced by					Page 605

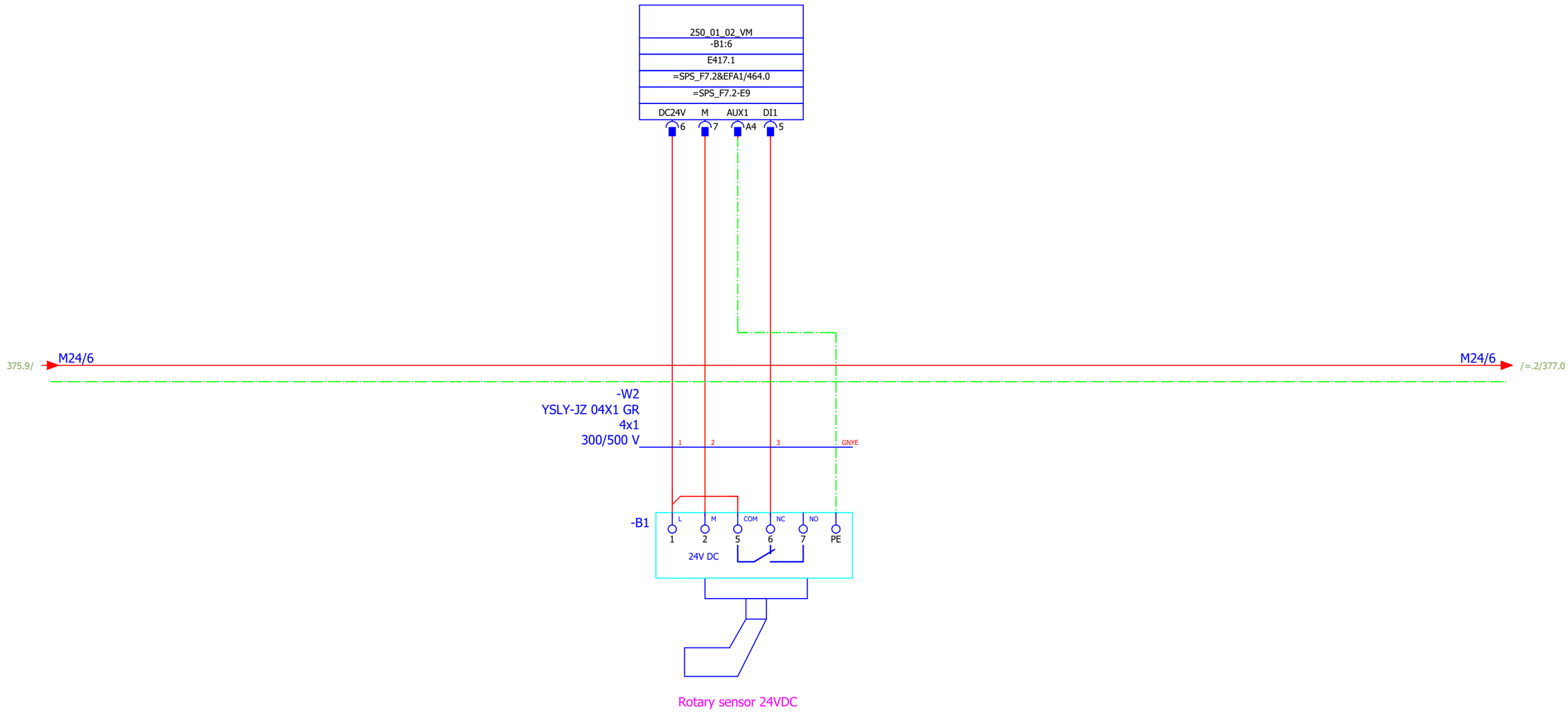

			Date	12.12.2019	Mixed feed plant Golden Poultry	BEYTEC ... your gateway to success	Full Silo 422	= 250.1	
			Ed.	willen				+ F27	
			Appr		field 7 external signals			1 : 1 / Part II	Page 376
Modification	Date	Name	Original	V:\EPLAN\Projekte\Company\Replace\Beytec\2018\Feed Mill Alssad.elk	Replaced by				Page 605

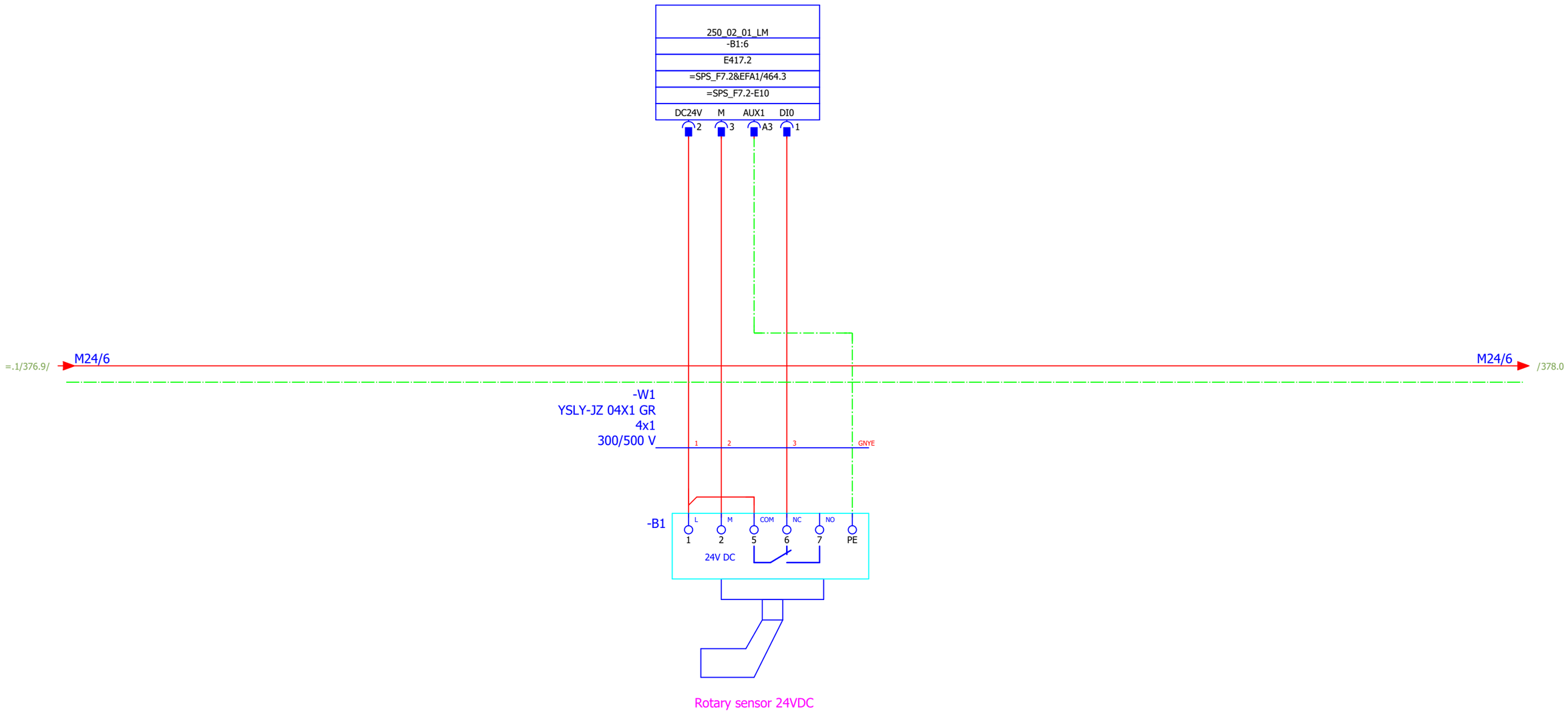

			Date	12.12.2019	Mixed feed plant Golden Poultry	BEYTEC	Empty detector silo 421		= 250.2		
			Ed.	willen					+ F27		
			Appr		field 7 external signals			1 : 1	Part II	Page	377
Modification	Date	Name	Original	V:\EPLAN\Projekte\Company\Replace\Beytec\2018\Feed Mill Alssad.elk	Replaced by	... your gateway to success				Page	605

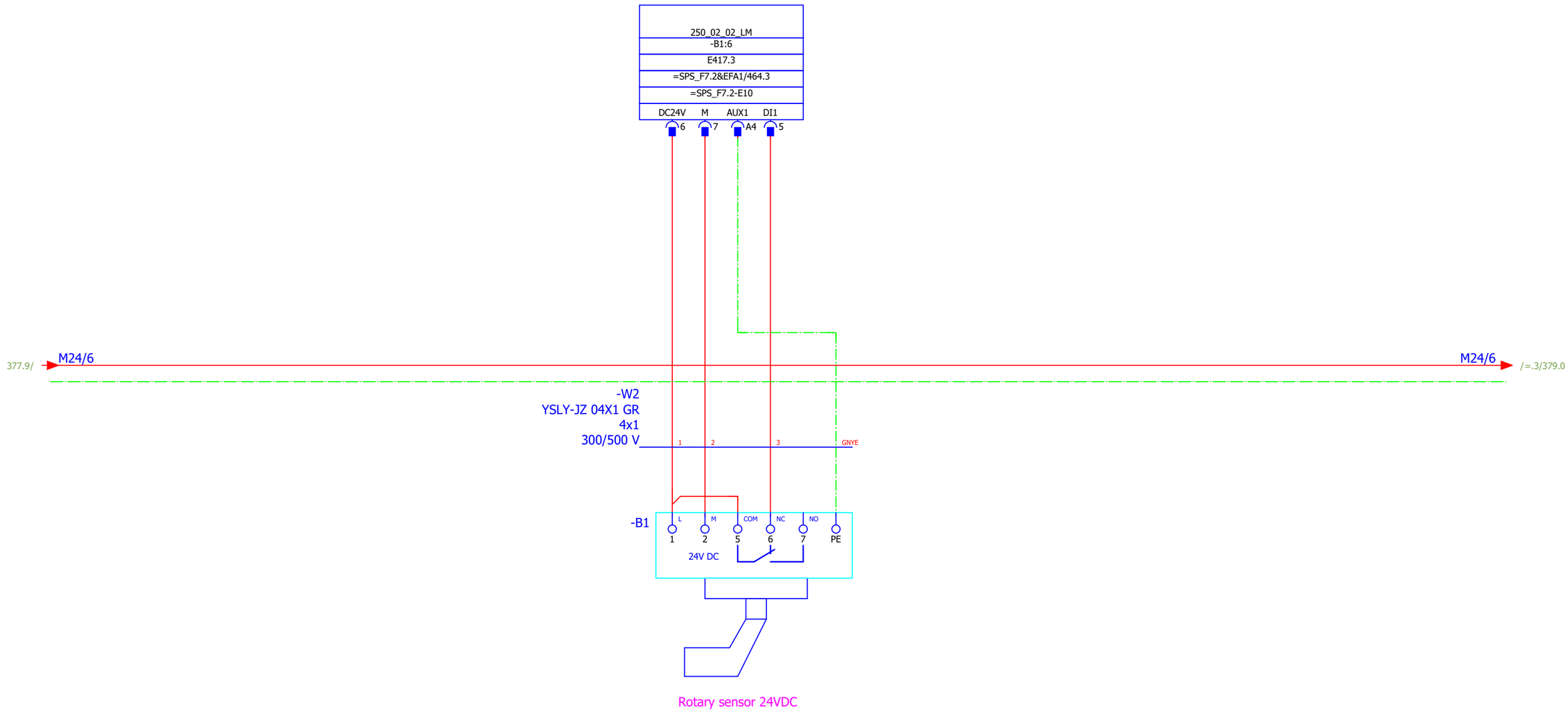

			Date	12.12.2019	Mixed feed plant Golden Poultry	BEYTEC ... your gateway to success	Empty detector silo 422	= 250.2	
			Ed.	willen	field 7 external signals			+ F27	
			Appr					1 : 1	Part II
Modification	Date	Name	Original	V:\EPLAN\Projekte\Company\Replace\Beytec\2018\Feed Mill Alssad.elk	Replaced by				

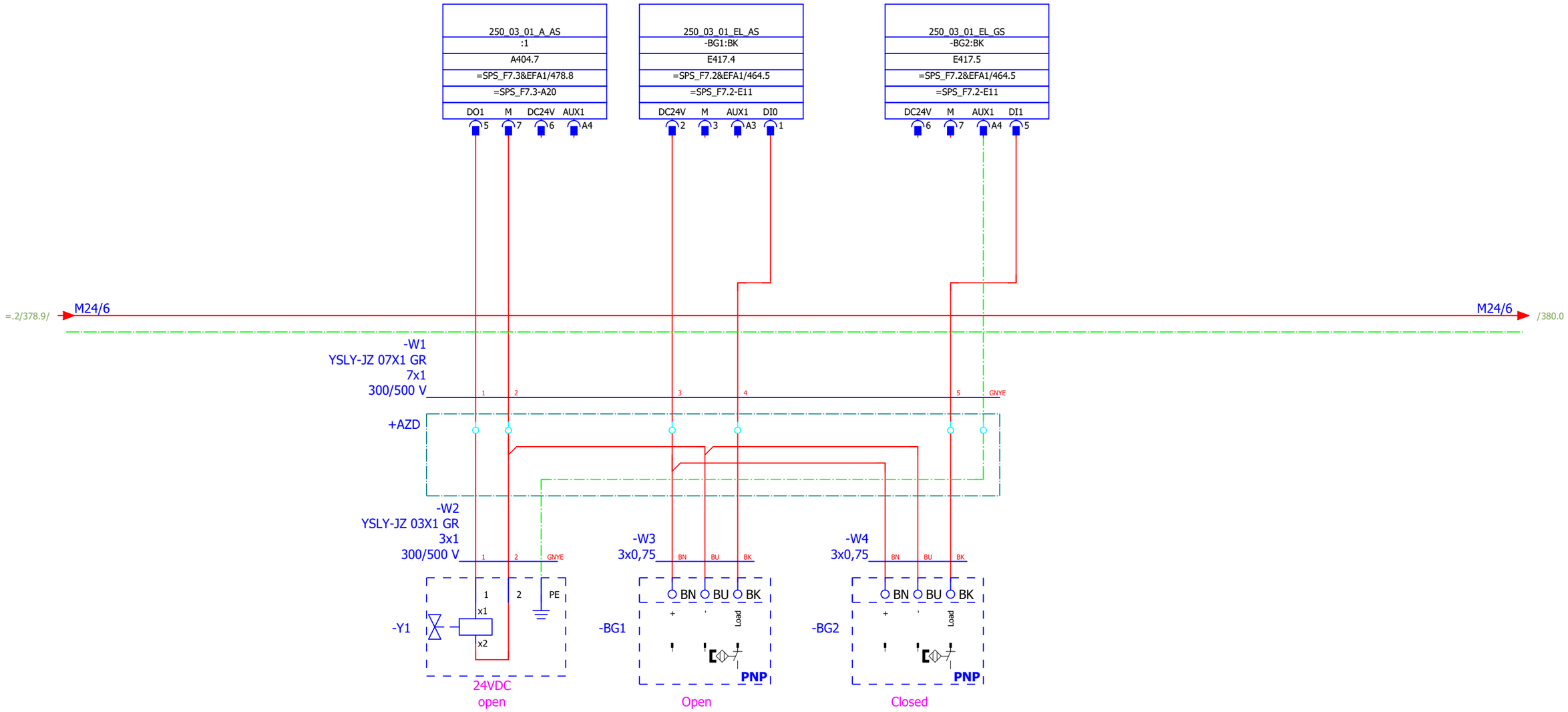

			Date	12.12.2019	Mixed feed plant Golden Poultry	BEYTEC ... your gateway to success	pneumatic slide silo 421		= 250.3	
			Ed.	willen					+ F27	
			Appr		field 7 external signals			1 : 1	Part II	Page 379
Modification	Date	Name	Original	V:\EPLAN\Projekte\Company\Replace\Beytec\2018\Feed Mill Alssad.elk		Replaced by				Page 605

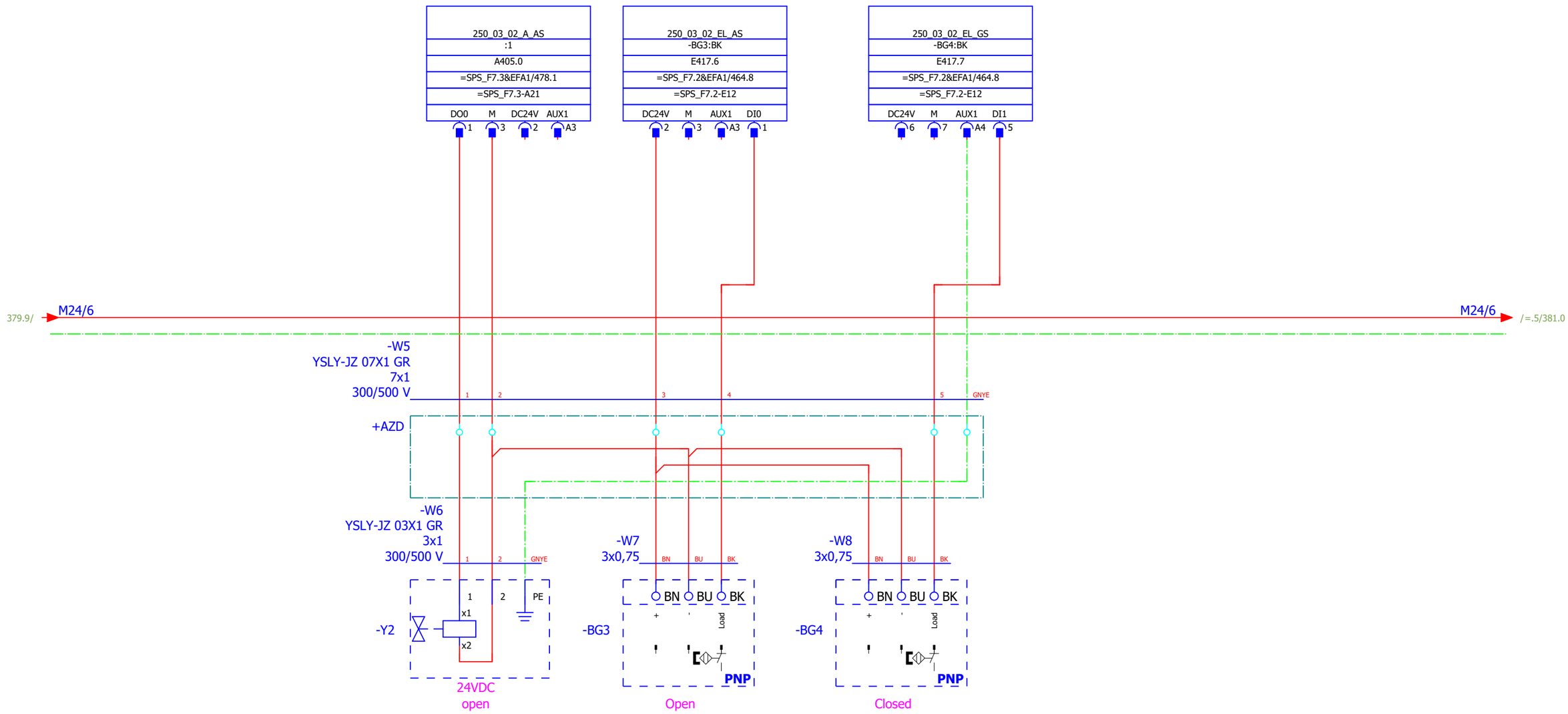

379

=.5/381

			Date	12.12.2019	Mixed feed plant Golden Poultry	BEYTEC ... your gateway to success	pneumatic slide silo 422	= 250.3	
			Ed.	willen				+ F27	
			Appr		field 7 external signals			1 : 1 / Part II	Page 380
Modification	Date	Name	Original	V:\EPLAN\Projekte\Company\Replace\Beytec\2018\Feed Mill Alssad.elk	Replaced by				Page 605

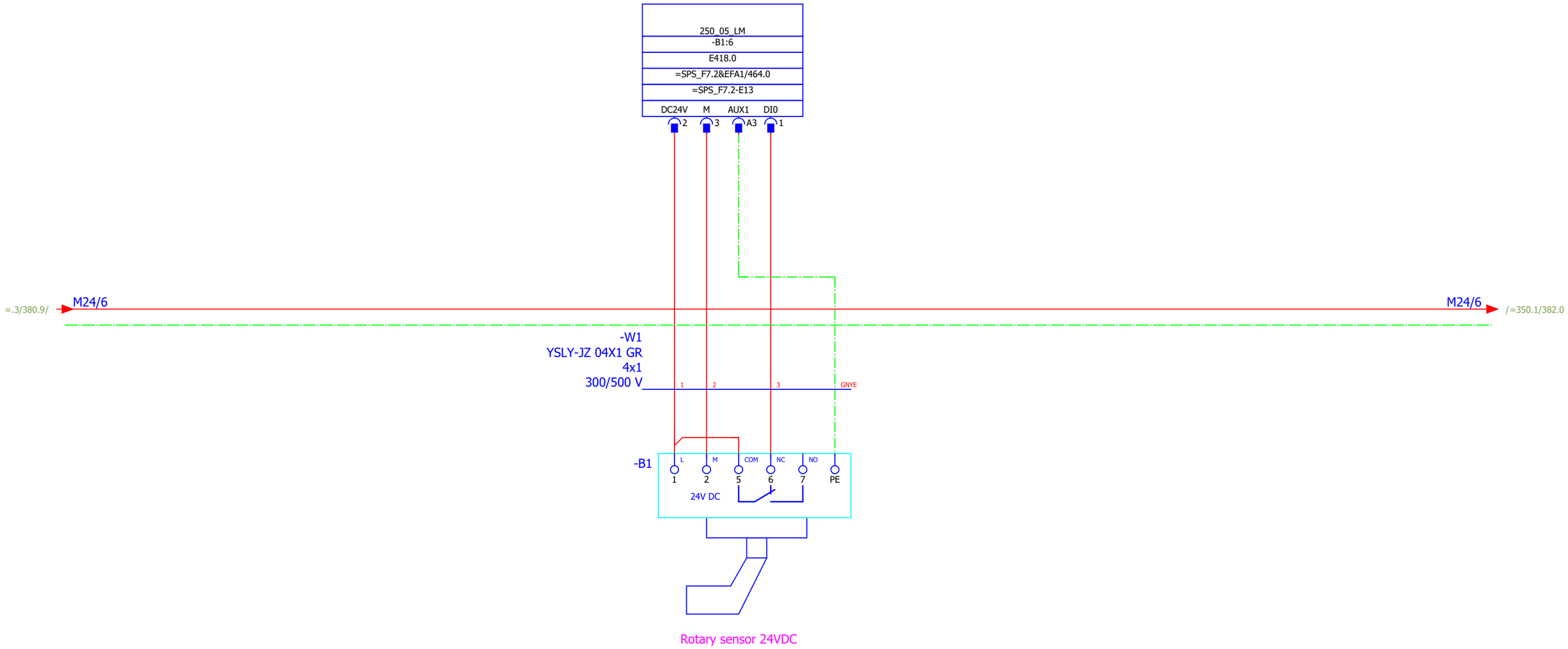
250_05_LM
-B1:6
E418.0
=SPS_F7.2&EFA1/464.0
=SPS_F7.2-E13
DC24V
M
AUX1
DI0
2
3
A3
1
=.3/380.9/
M24/6
M24/6
/=350.1/382.0
-W1
YSLY-JZ 04X1 GR
4x1
300/500 V
1
2
3
GNYE
-B1
L
M
COM
NC
NO
1
2
5
6
7
PE
24V DC
Rotary sensor 24VDC

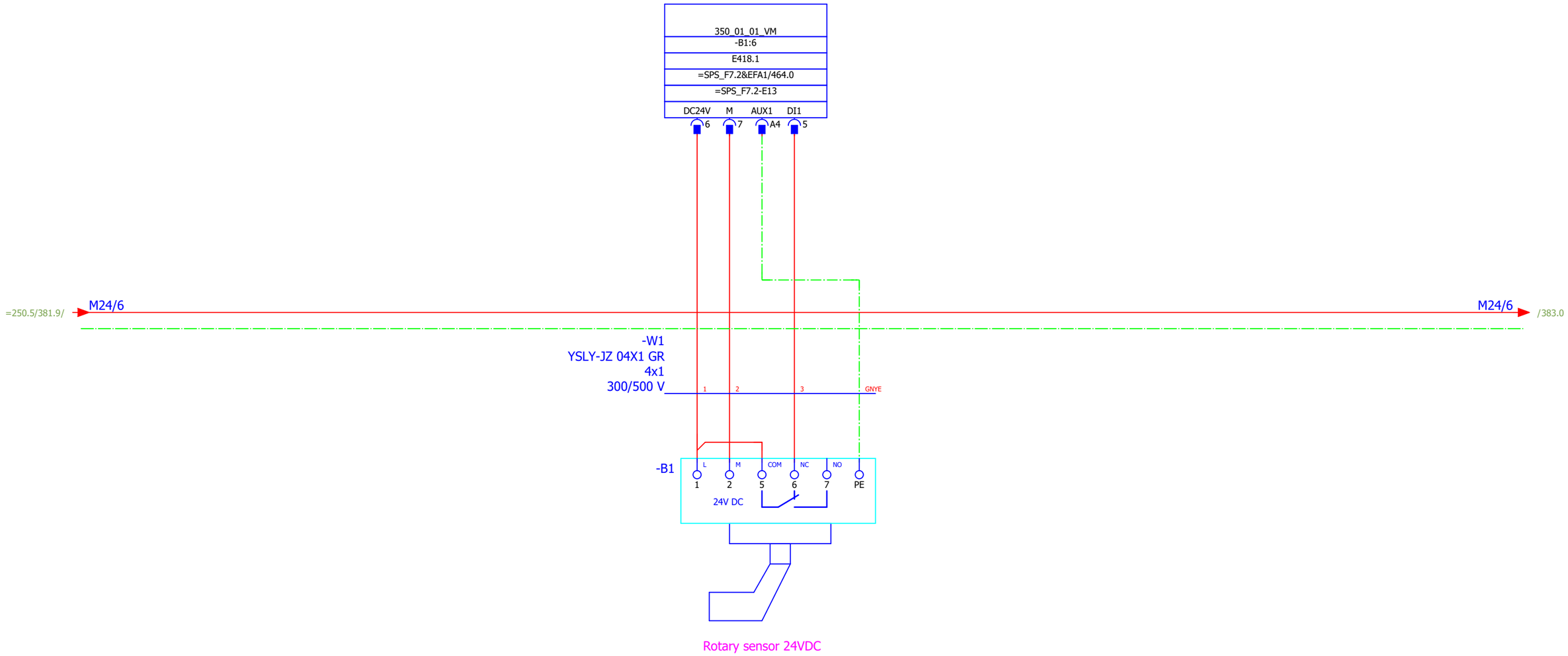
350_01_01_VM
-B1:6
E418.1
=SPS_F7.2&EFA1/464.0
=SPS_F7.2-E13
DC24V
M
AUX1
DI1
6
7
A4
5
=250.5/381.9/
M24/6
M24/6
/383.0
-W1
YSLY-JZ 04X1 GR
4x1
300/500 V
1
2
3
GNYE
-B1
L
M
COM
NC
NO
1
2
5
6
7
PE
24V DC
Rotary sensor 24VDC

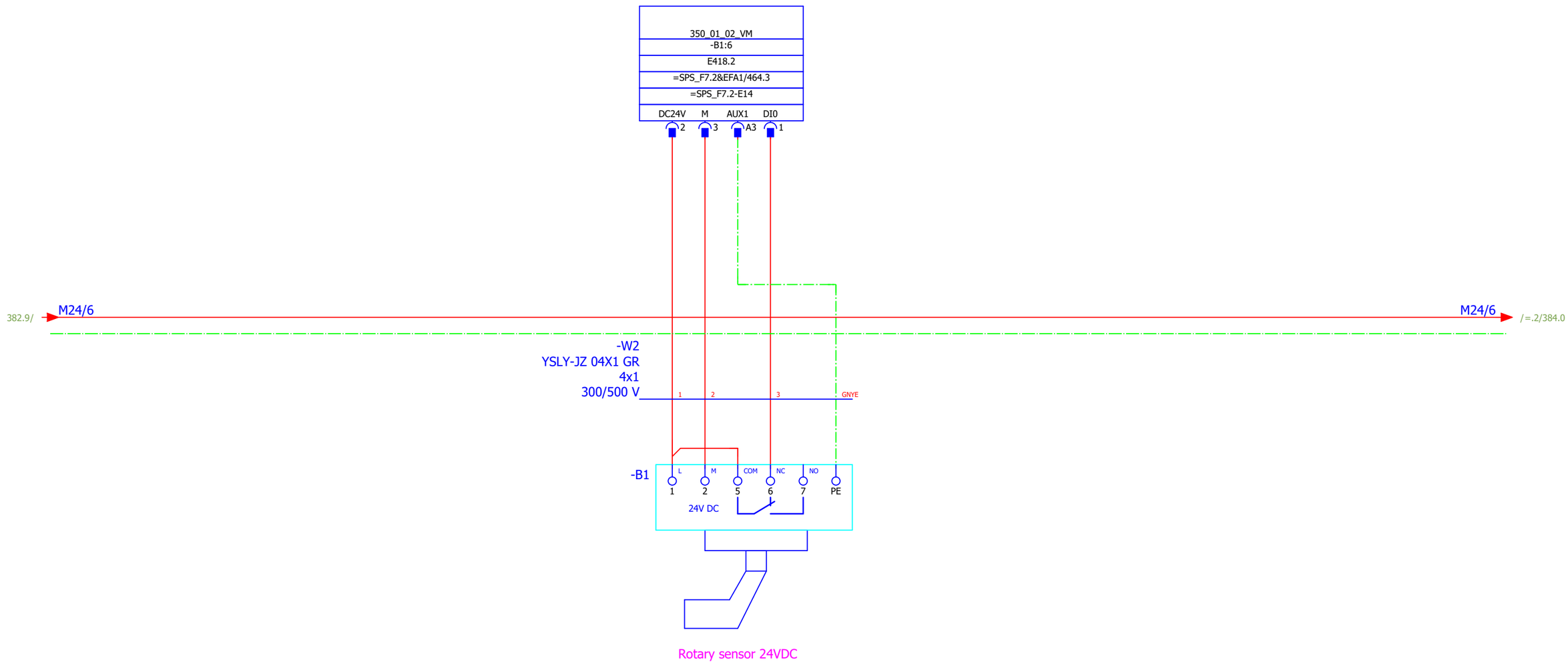

			Date	12.12.2019	Mixed feed plant Golden Poultry	BEYTEC ... your gateway to success	Full Silo 432	= 350.1	
			Ed.	willen				+ F27	
			Appr		field 7 external signals			1 : 1 / Part II	Page 383
Modification	Date	Name	Original	V:\EPLAN\Projekte\Company\Replace\Beytec\2018\Feed Mill Alssad.elk	Replaced by				Page 605

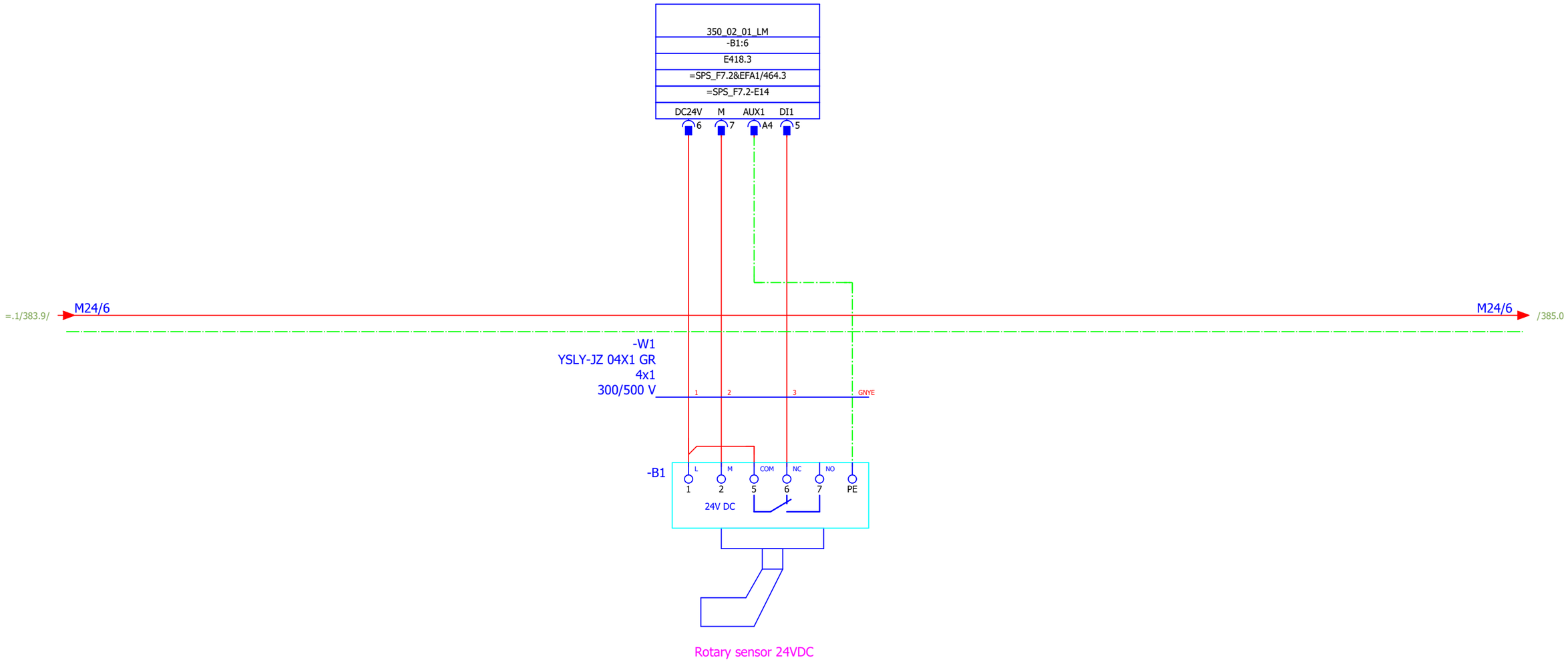

			Date	12.12.2019	Mixed feed plant Golden Poultry	BEYTEC	Empty detector silo 431			= 350.2	
			Ed.	willen		... your gateway to success				+ F27	
			Appr		field 7 external signals			1 : 1	Part II	Page 384	
Modification	Date	Name	Original	V:\EPLAN\Projekte\Company\Replace\Beytec\2018\Feed Mill Alssad.elk	Replaced by					Page 605	

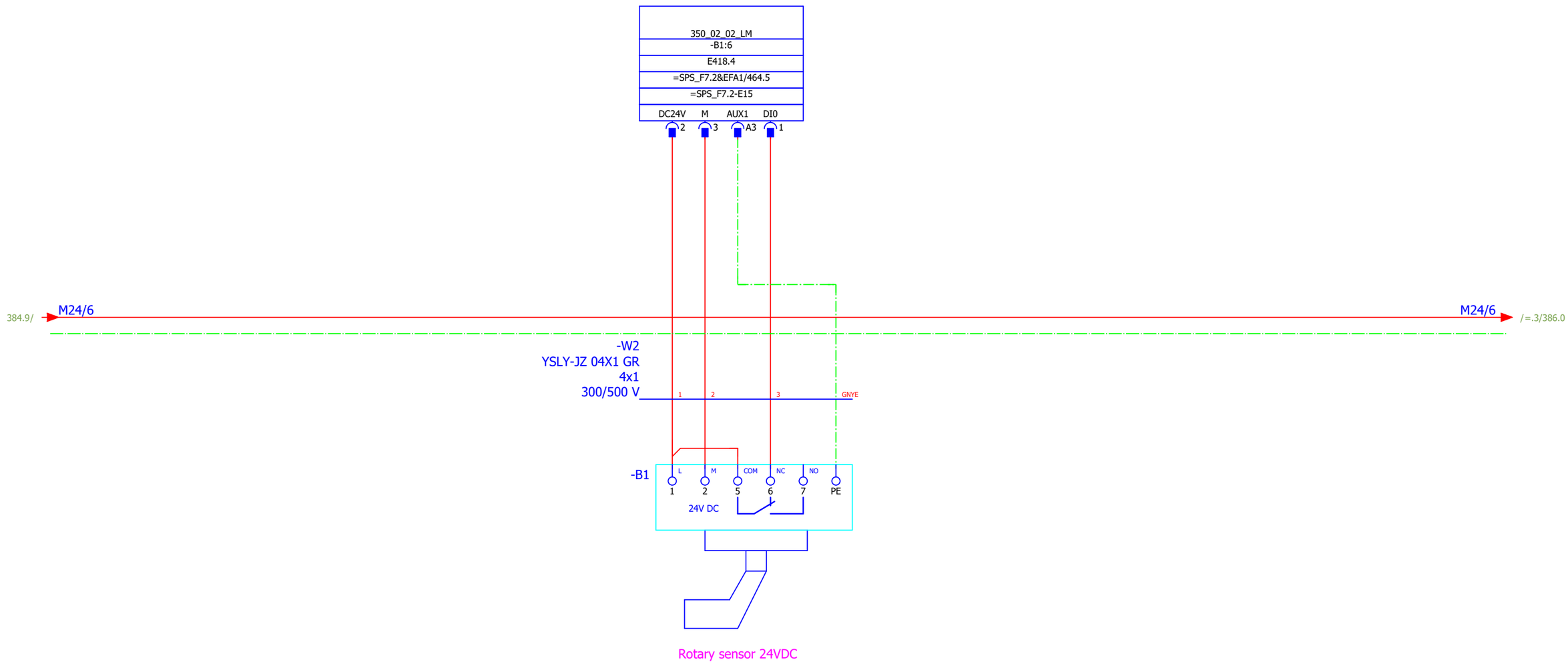

			Date	12.12.2019	Mixed feed plant Golden Poultry	BEYTEC ... your gateway to success	Empty detector silo 432	= 350.2	
			Ed.	willen				+ F27	
			Appr		field 7 external signals			1 : 1 / Part II	Page 385
Modification	Date	Name	Original	V:\EPLAN\Projekte\Company\Replace\Beytec\2018\Feed Mill Alssad.elk	Replaced by				Page 605

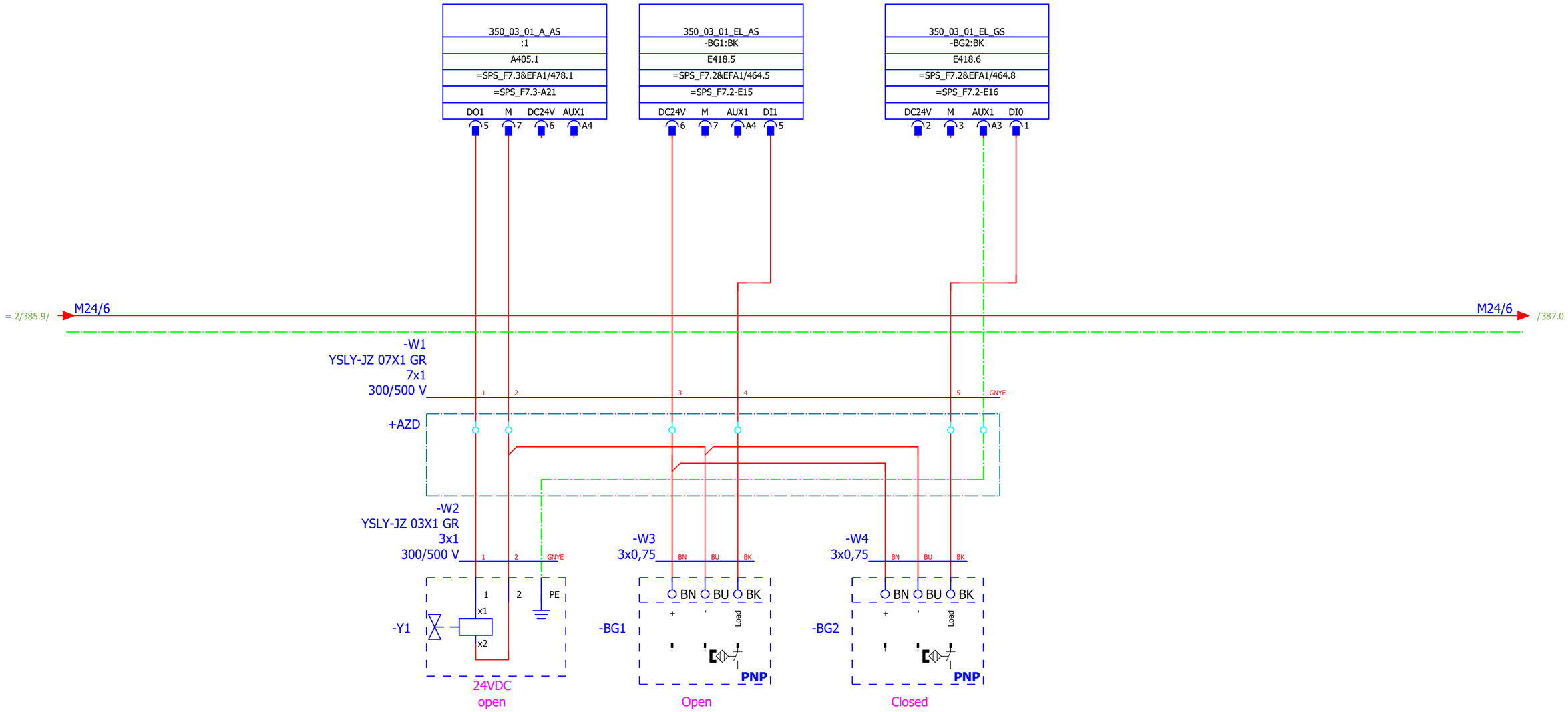

			Date	12.12.2019	Mixed feed plant Golden Poultry	BEYTEC	pneumatic slide silo 431			= 350.3	
			Ed.	willen		... your gateway to success				+ F27	
			Appr		field 7 external signals			1 : 1	Part II	Page 386	
Modification	Date	Name	Original	V:\EPLAN\Projekte\Company\Replace\Beytec\2018\Feed Mill Alssad.elk	Replaced by					Page 605	

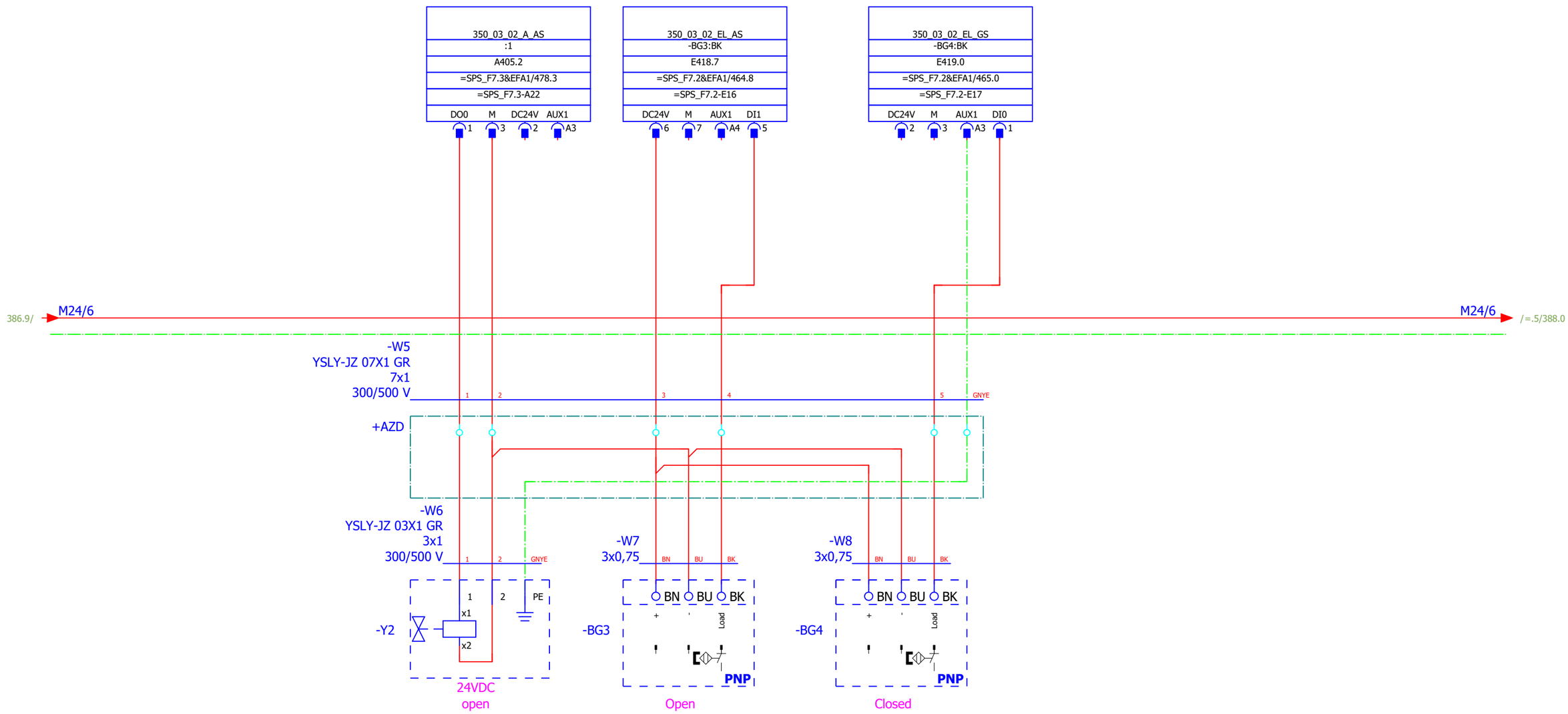

=.5/388

			Date	12.12.2019	Mixed feed plant Golden Poultry	BEYTEC ... your gateway to success	pneumatic slide silo 432	= 350.3	
			Ed.	willen				+ F27	
			Appr		field 7 external signals			1 : 1 / Part II	Page 387
Modification	Date	Name	Original	V:\EPLAN\Projekte\Company\Replace\Beytec\2018\Feed Mill Alssad.elk	Replaced by				Page 605

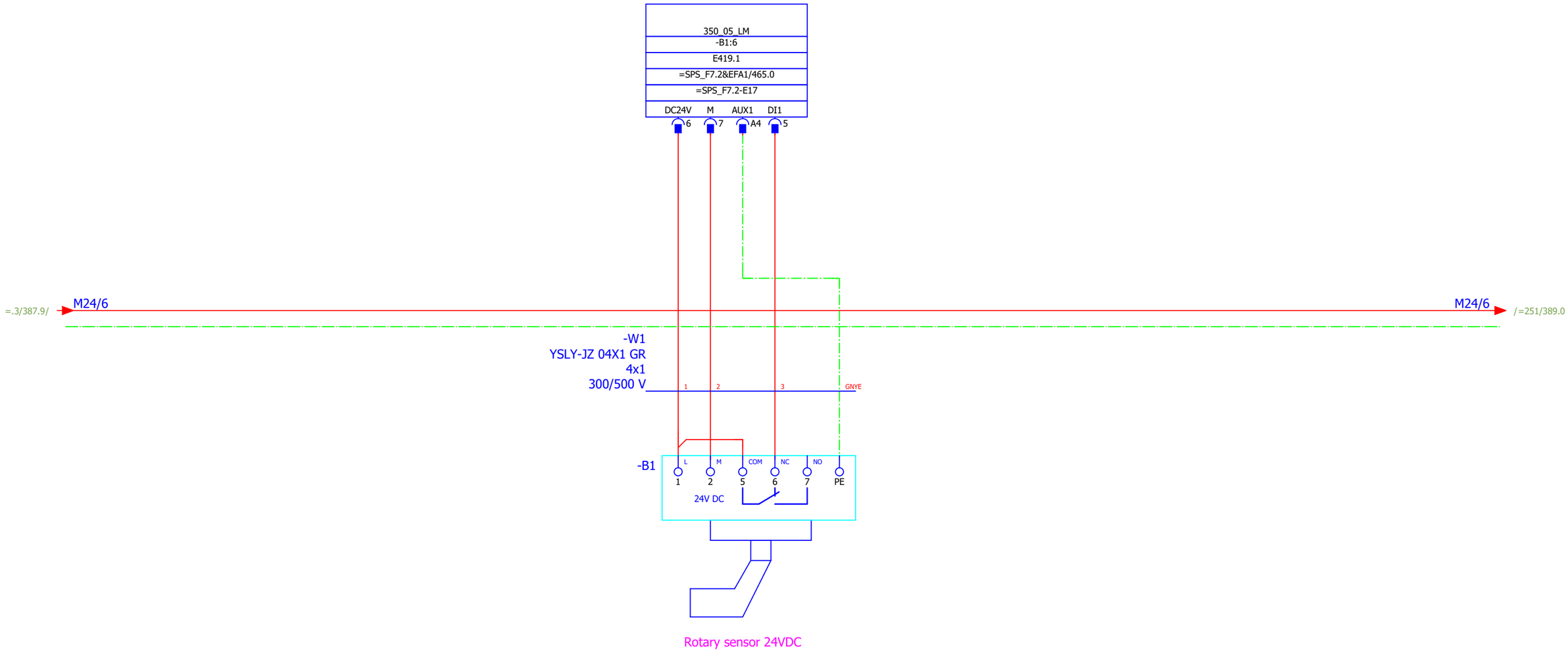
350_05_LM
-B1:6
E419.1
=SPS_F7.2&EFA1/465.0
=SPS_F7.2-E17
DC24V
M
AUX1
DI1
6
7
A4
5
=.3/387.9/
M24/6
M24/6
/=251/389.0
-W1
YSLY-JZ 04X1 GR
4x1
300/500 V
1
2
3
GNYE
-B1
L
M
COM
NC
NO
1
2
5
6
7
PE
24V DC
Rotary sensor 24VDC

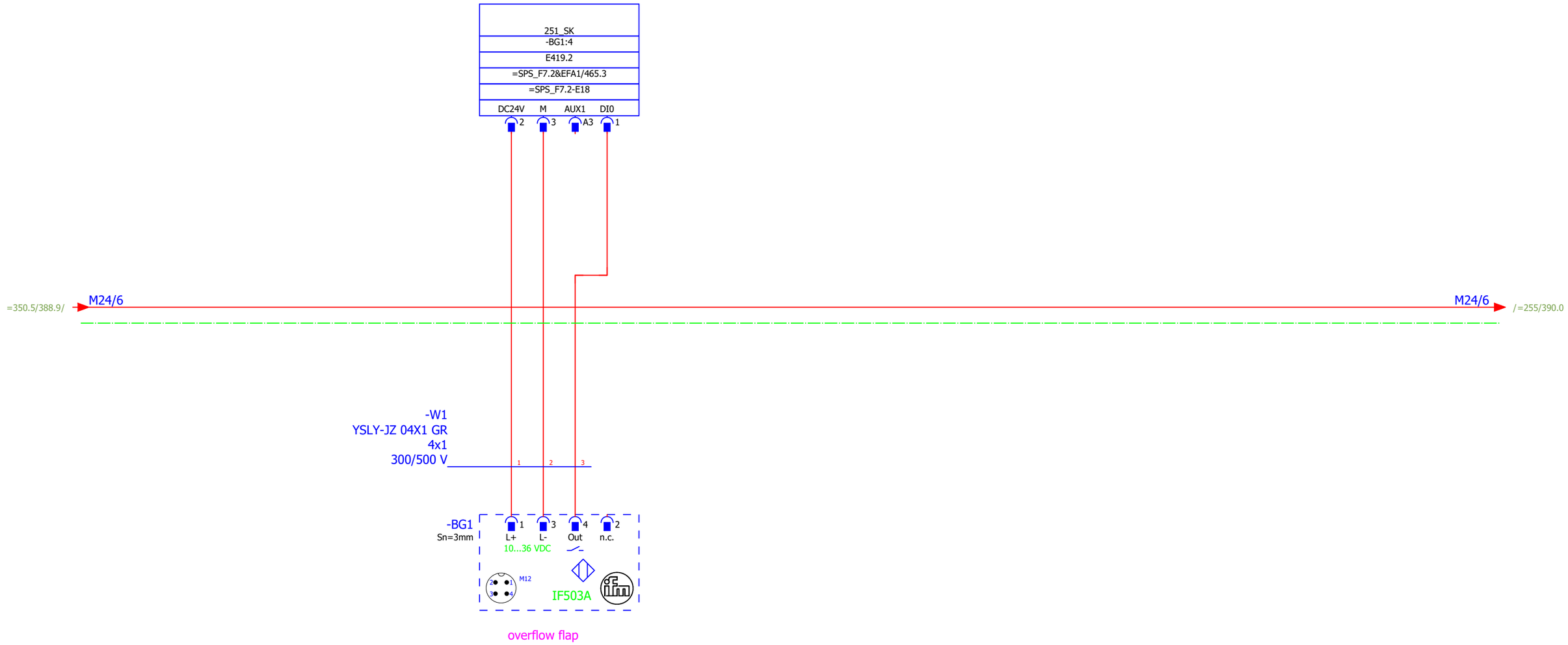

+F25/157

=252+F25/158

			Date	12.12.2019	Mixed feed plant Golden Poultry	BEYTEC ... your gateway to success	overflow flap & rotation speed monitor	= 251	
			Ed.	willen				+ F27	
			Appr		field 7 external signals			1 : 1 Part II	Page 389
Modification	Date	Name	Original	V:\EPLAN\Projekte\Company\Replace\Beytec\2018\Feed Mill Alssad.elk	Replaced by				Page 605

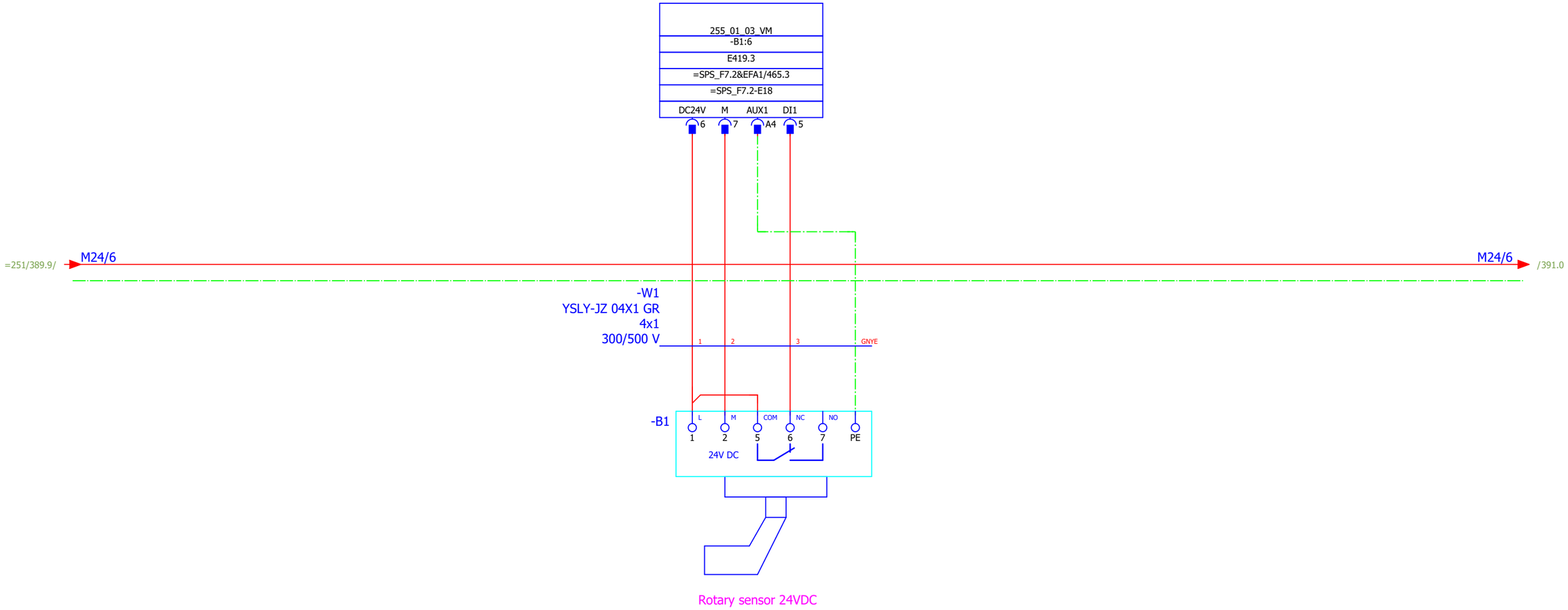

			Date	12.12.2019	Mixed feed plant Golden Poultry	BEYTEC	high-level-indicatorcooler 1		= 255
			Ed.	willen	field 7 external signals	... your gateway to success			+ F27
			Appr					1 : 1	Part II	Page 390
Modification	Date	Name	Original	V:\EPLAN\Projekte\Company\Beytec\2018\Feed Mill Alssad.elk	Replaced by				Page 605

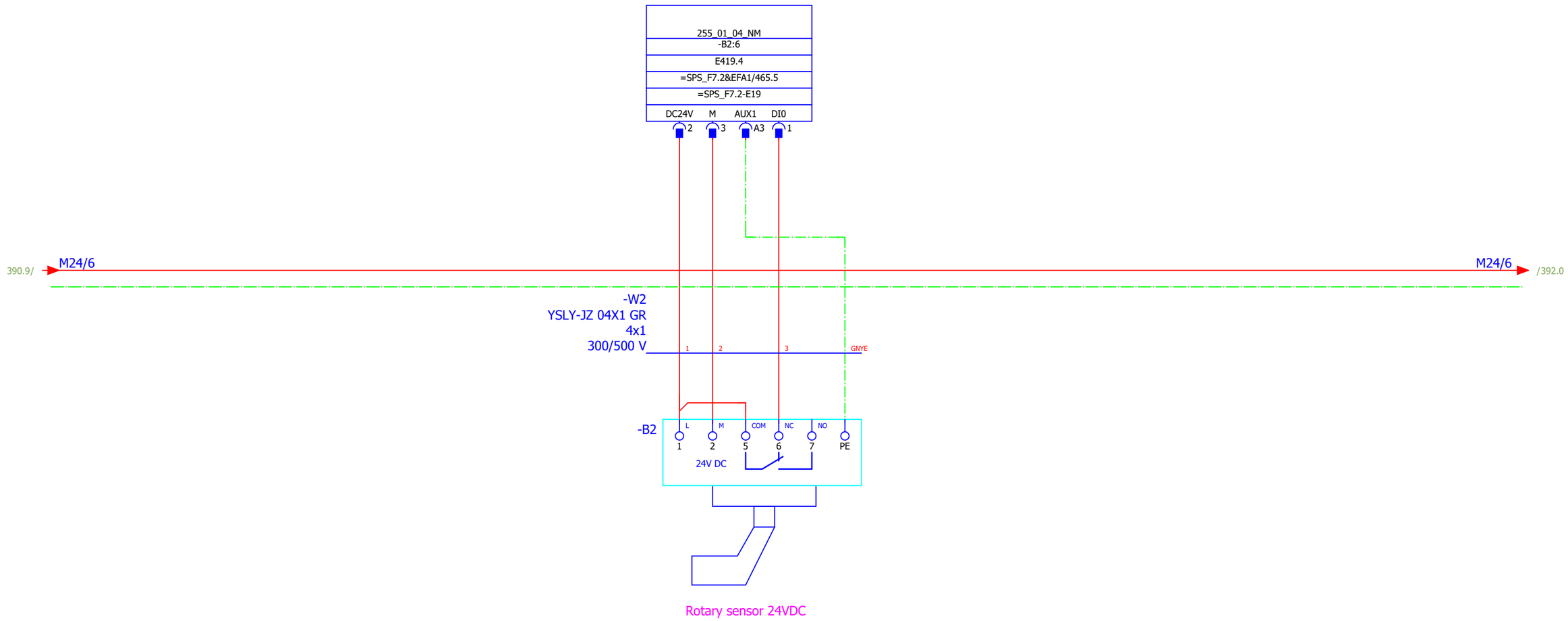

			Date	12.12.2019	Mixed feed plant Golden Poultry	BEYTEC	level detector cooler		= 255	
			Ed.	willen	field 7 external signals	... your gateway to success			+ F27	
			Appr					1 : 1	Part II	Page 391
Modification	Date	Name	Original	V:\EPLAN\Projekte\Company\Beytec\2018\Feed Mill Alssad.elk	Replaced by					Page 605

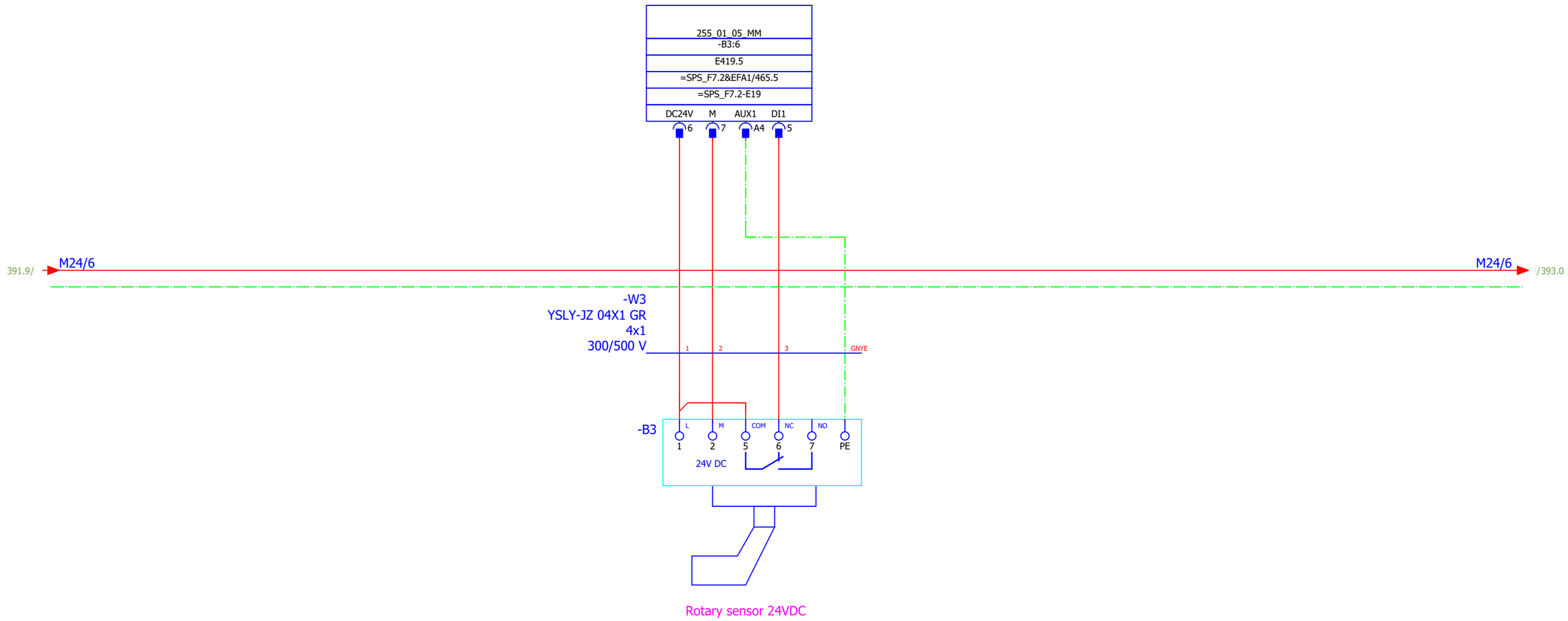

			Date	12.12.2019	Mixed feed plant Golden Poultry	BEYTEC	matarial-indicator cooler 1			= 255	
			Ed.	willen	field 7 external signals	... your gateway to success				+ F27	
			Appr					1 : 1	Part II	Page	392
Modification	Date	Name	Original	V:\EPLAN\Projekte\Company\Beytec\2018\Feed Mill Alssad.elk	Replaced by					Page	605

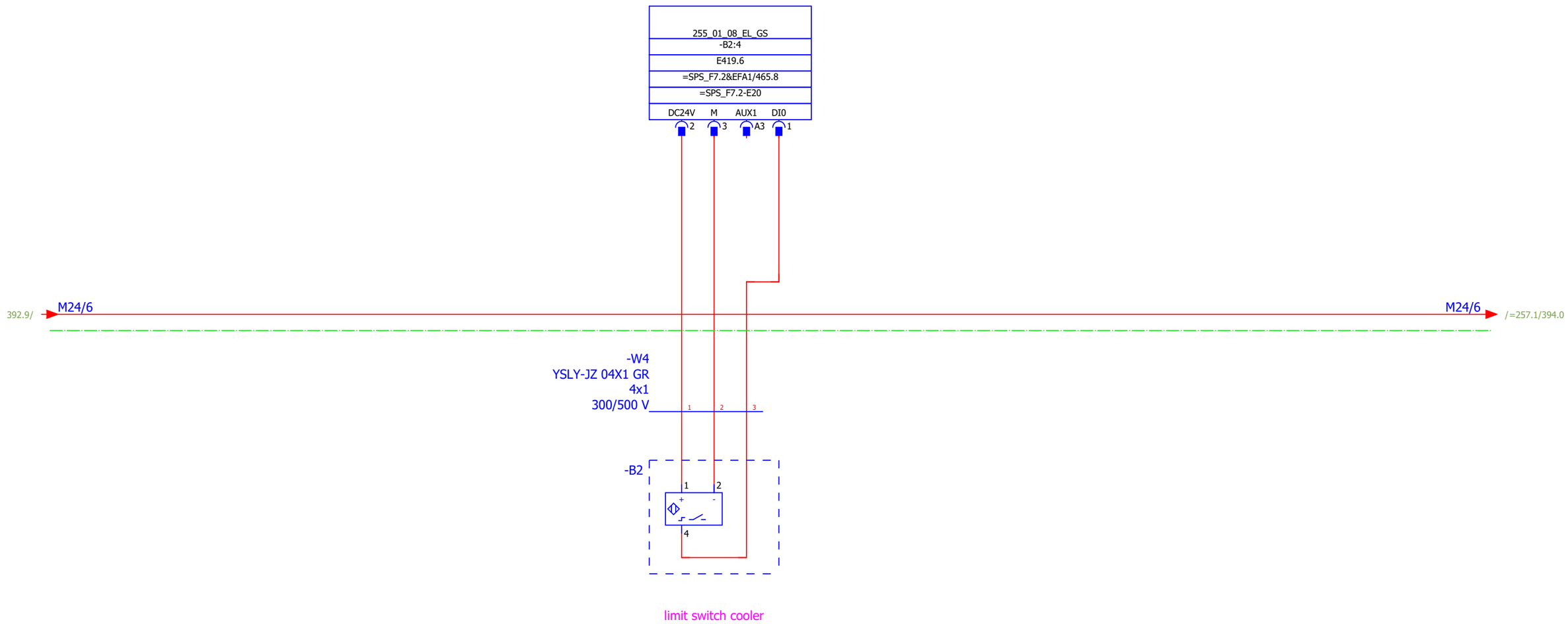

=256+F25/167

			Date	12.12.2019	Mixed feed plant Golden Poultry	BEYTEC ... your gateway to success	limit switch discharge cooler 1	= 255	
			Ed.	willen				+ F27	
			Appr		field 7 external signals			1 : 1 / Part II	Page 393
Modification	Date	Name	Original	V:\EPLAN\Projekte\Company\Replace\Beytec\2018\Feed Mill Alssad.elk	Replaced by				Page 605

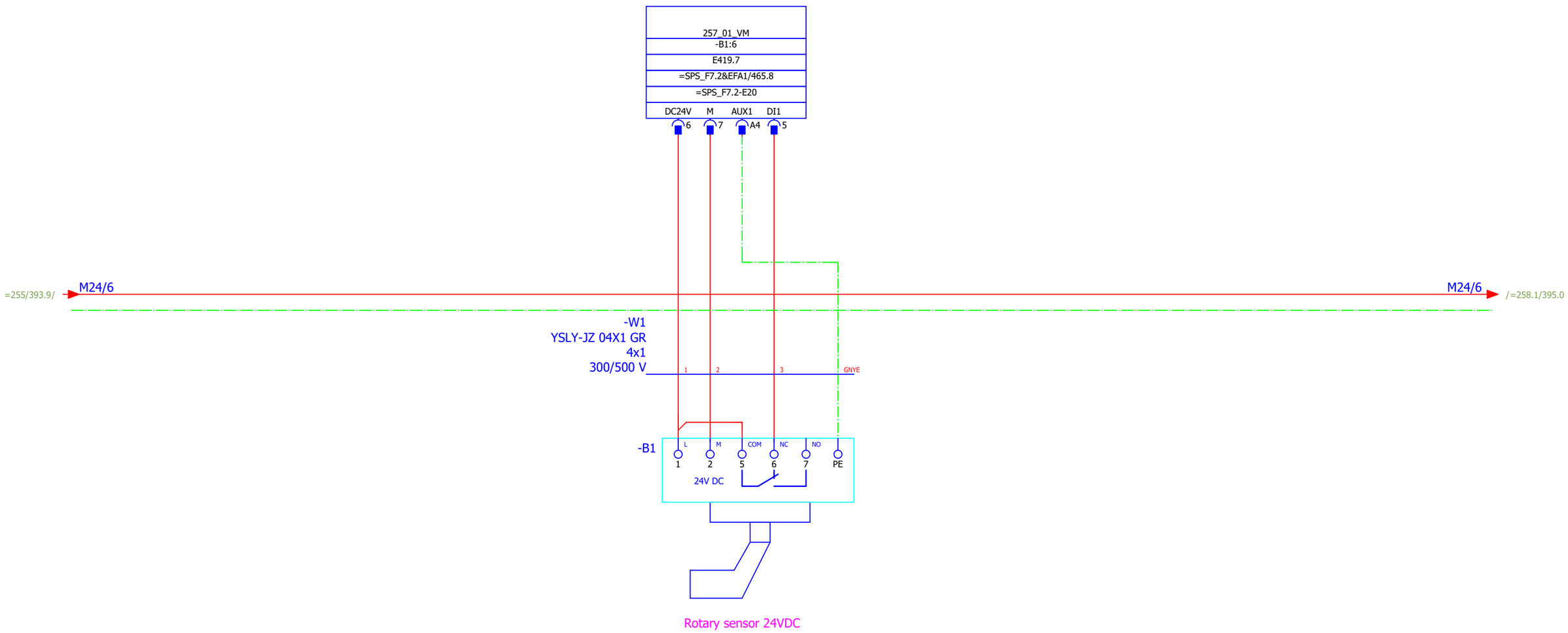
257_01_VM
-B1:6
E419.7
=SPS_F7.2&EFA1/465.8
=SPS_F7.2-E20
DC24V
M
AUX1
DI1
6
7
A4
5
=255/393.9/
M24/6
M24/6
/=258.1/395.0
-W1
YSLY-JZ 04X1 GR
4x1
300/500 V
1
2
3
GNYE
-B1
L
M
COM
NC
NO
1
2
5
6
7
PE
24V DC
Rotary sensor 24VDC

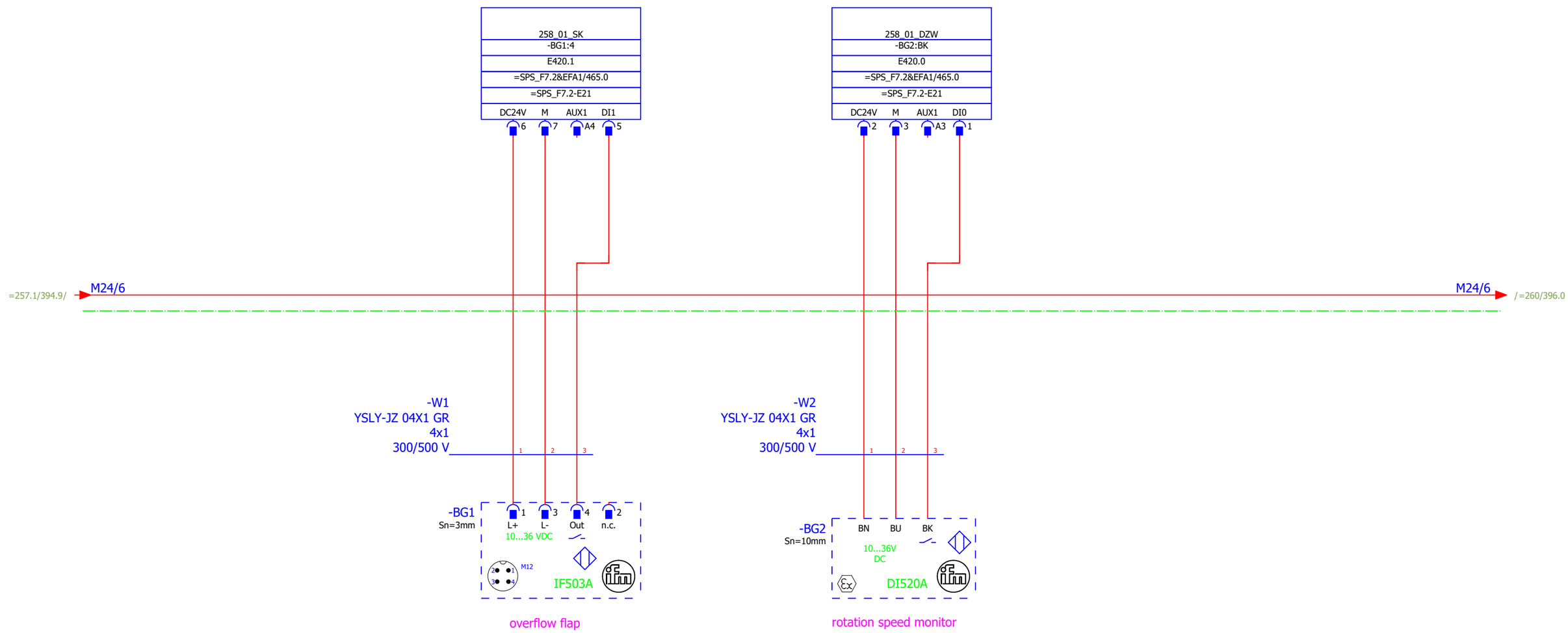

			Date	12.12.2019	Mixed feed plant Golden Poultry	BEYTEC ... your gateway to success	overflow flap & rotation speed monitor	= 258.1	
			Ed.	willen				+ F27	
			Appr		field 7 external signals			1 : 1 / Part II	Page 395
Modification	Date	Name	Original	V:\EPLAN\Projekte\Company\Replaced\Beytec\2018\Feed Mill Alssad.elk	Replaced by				Page 605

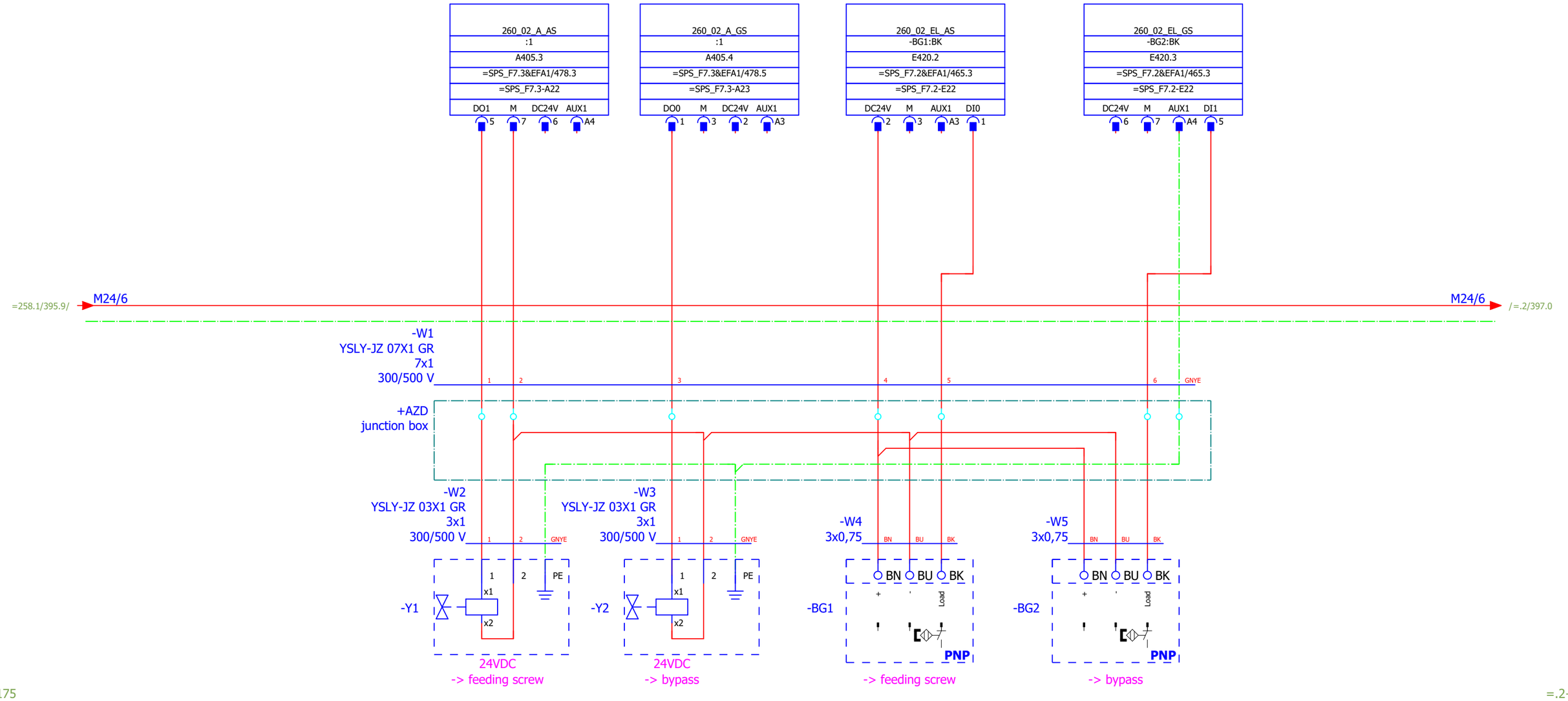

+F25/175

=.2+F25/176

			Date	12.12.2019	Mixed feed plant Golden Poultry	BEYTEC ... your gateway to success	bypass flap	= 260	
			Ed.	willen				+ F27	
			Appr		field 7 external signals			1 : 1 / Part II	Page 396
Modification	Date	Name	Original	V:\EPLAN\Projekte\Company\Replace\Beytec\2018\Feed Mill Alssad.elk		Replaced by			Page 605

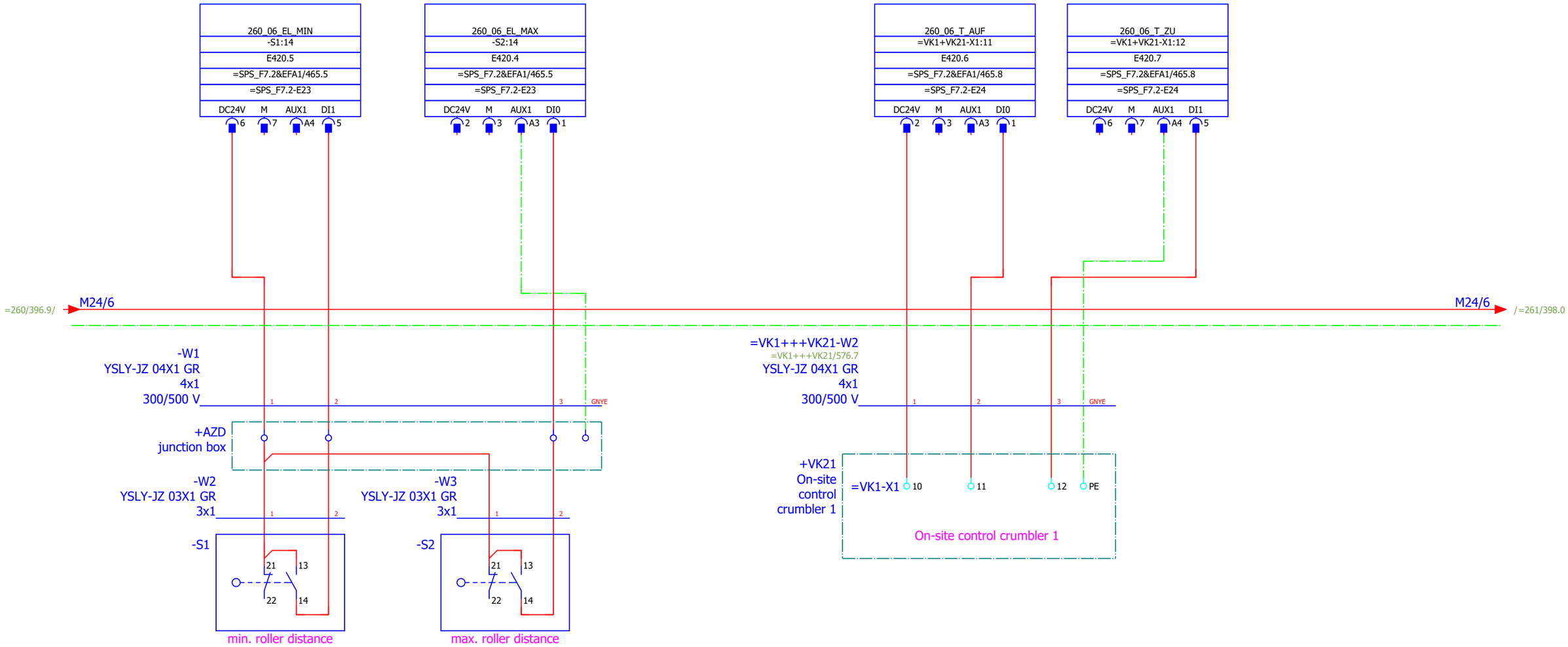
260_06_EL_MIN
-S1:14
E420.5
=SPS_F7.2&EFA1/465.5
=SPS_F7.2-E23
DC24V M AUX1 DI1
6 7 A4 5
260_06_EL_MAX
-S2:14
E420.4
=SPS_F7.2&EFA1/465.5
=SPS_F7.2-E23
DC24V M AUX1 DI0
2 3 A3 1
260_06_T_AUF
=VK1+VK21-X1:11
E420.6
=SPS_F7.2&EFA1/465.8
=SPS_F7.2-E24
DC24V M AUX1 DI0
2 3 A3 1
260_06_T_ZU
=VK1+VK21-X1:12
E420.7
=SPS_F7.2&EFA1/465.8
=SPS_F7.2-E24
DC24V M AUX1 DI1
6 7 A4 5
=260/396.9/
M24/6
M24/6
/=261/398.0
-W1
YSLY-JZ 04X1 GR
4x1
300/500 V
1 2 3 GNYE
+AZD
junction box
-W2
YSLY-JZ 03X1 GR
3x1
1 2
-W3
YSLY-JZ 03X1 GR
3x1
1 2
-S1
21 13
22 14
min. roller distance
-S2
21 13
22 14
max. roller distance
=VK1+++VK21-W2
=VK1+++VK21/576.7
YSLY-JZ 04X1 GR
4x1
300/500 V
1 2 3 GNYE
+VK21
On-site
control
crumbler 1
=VK1-X1
10 11 12 PE
On-site control crumbler 1

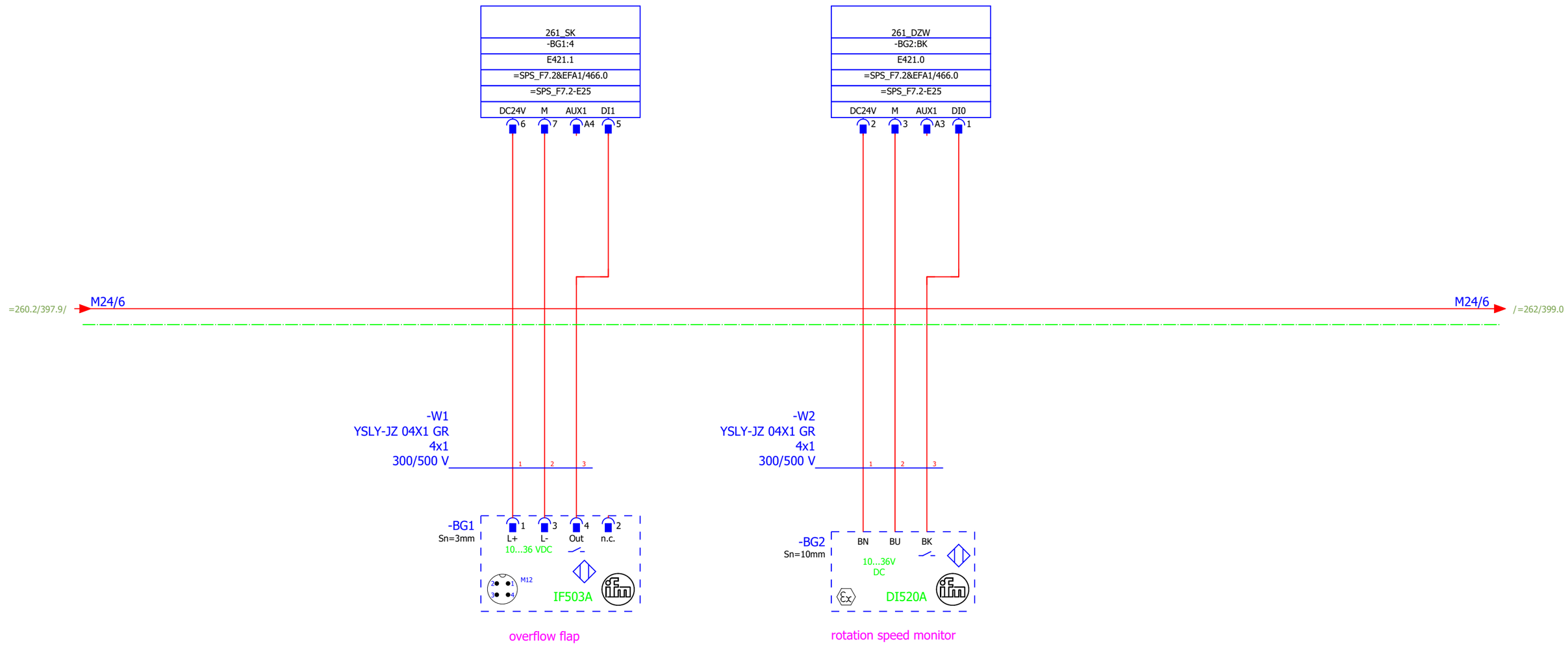

+F25/177

=262+F25/178

			Date	12.12.2019	Mixed feed plant Golden Poultry	BEYTEC ... your gateway to success	overflow flap & rotation speed monitor	= 261	
			Ed.	willen				+ F27	
			Appr		field 7 external signals			1 : 1 Part II	Page 398
Modification	Date	Name	Original	V:\EPLAN\Projekte\Company\Replace\Beytec\2018\Feed Mill Alssad.elk	Replaced by				Page 605

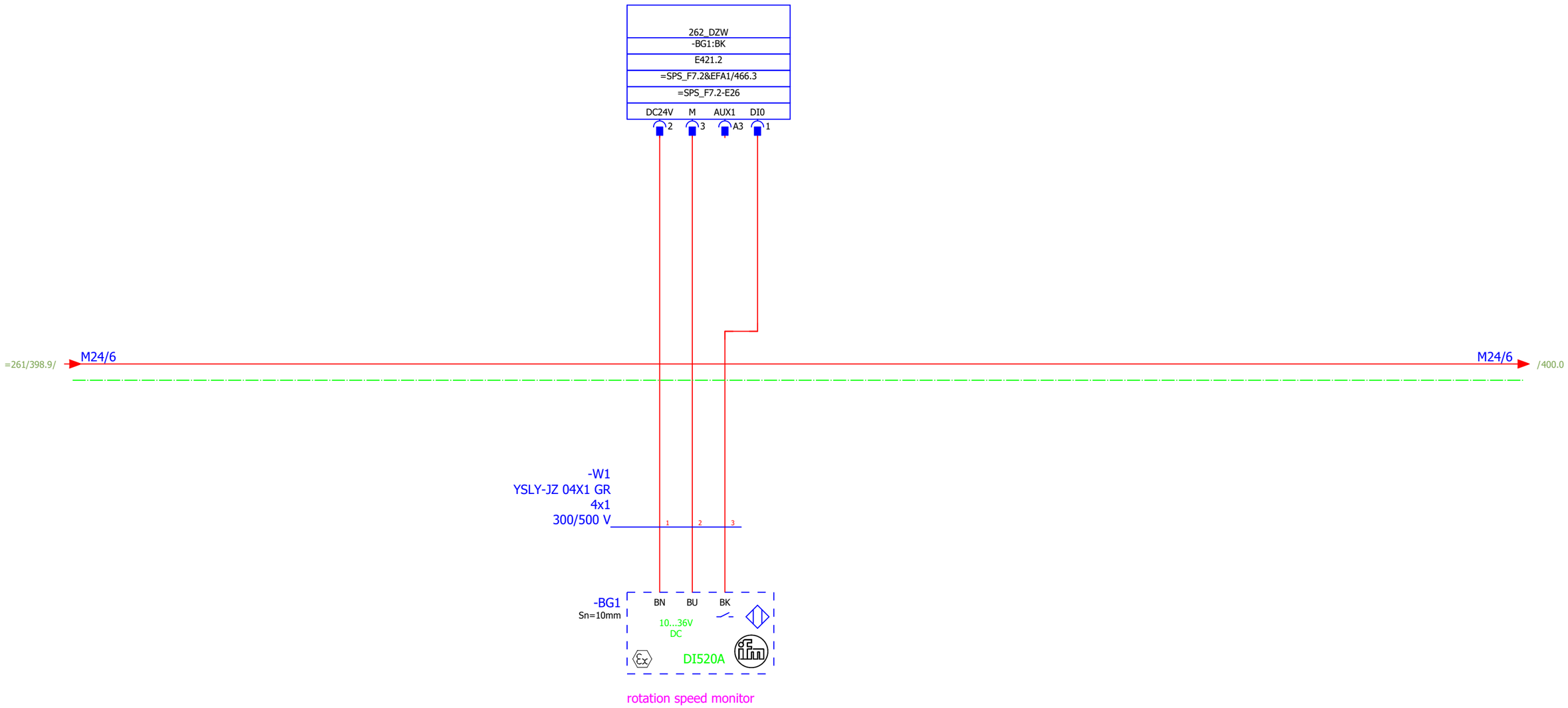

			Date	12.12.2019	Mixed feed plant Golden Poultry	BEYTEC ... your gateway to success	elevator rpm	= 262	
			Ed.	willen				+ F27	
			Appr		field 7 external signals			1 : 1 Part II	Page 399
Modification	Date	Name	Original	V:\EPLAN\Projekte\Company\Replace\Beytec\2018\Feed Mill Alssad.elk	Replaced by				Page 605

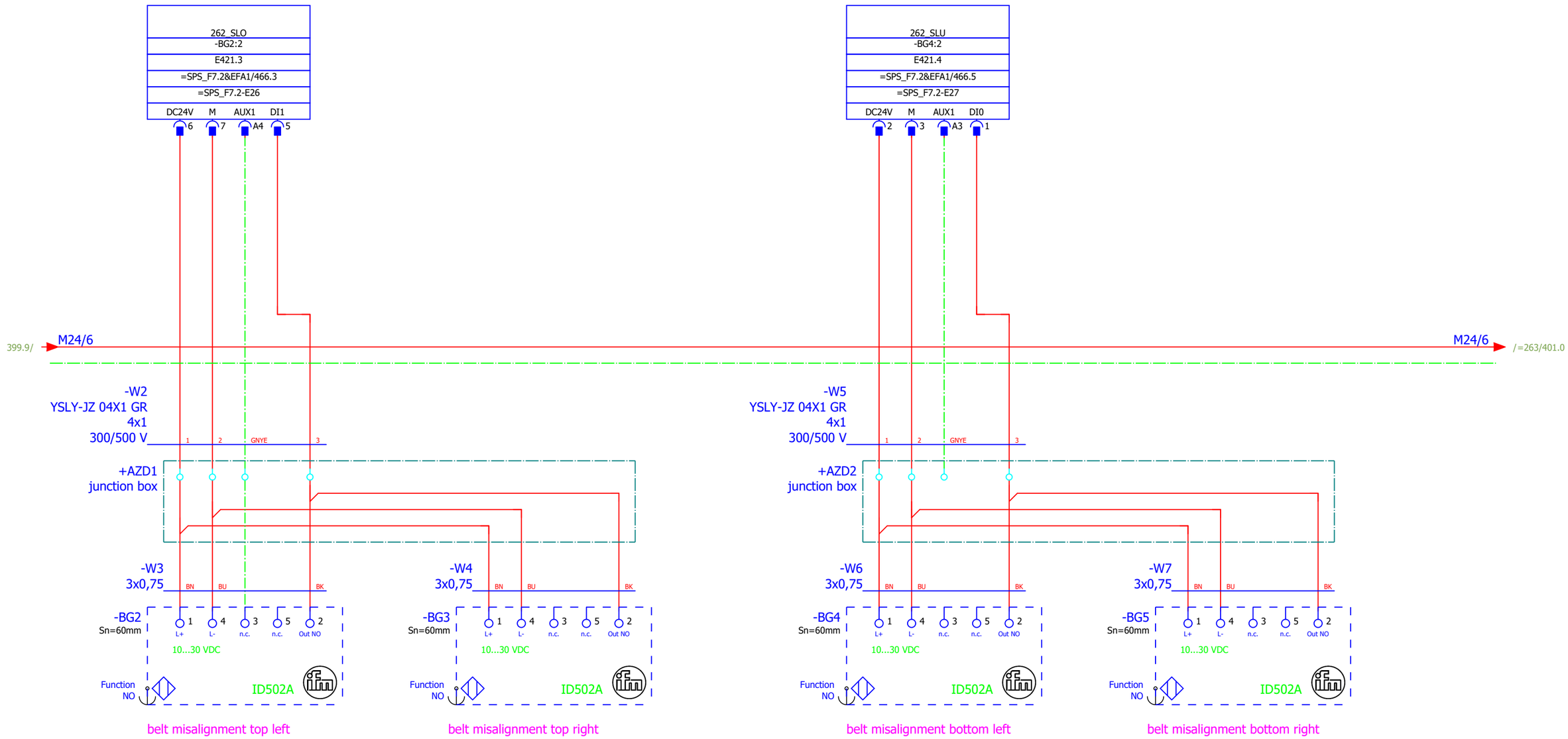

			Date	12.12.2019	Mixed feed plant Golden Poultry	BEYTEC	elevator belt misalignment			= 262	
			Ed.	willen		... your gateway to success				+ F27	
			Appr		field 7 external signals			1 : 1	Part II	Page	400
Modification	Date	Name	Original	V:\EPLAN\Projekte\Company\Replace\Beytec\2018\Feed Mill Alssad.elk	Replaced by					Page	605

Replace(Beytec)

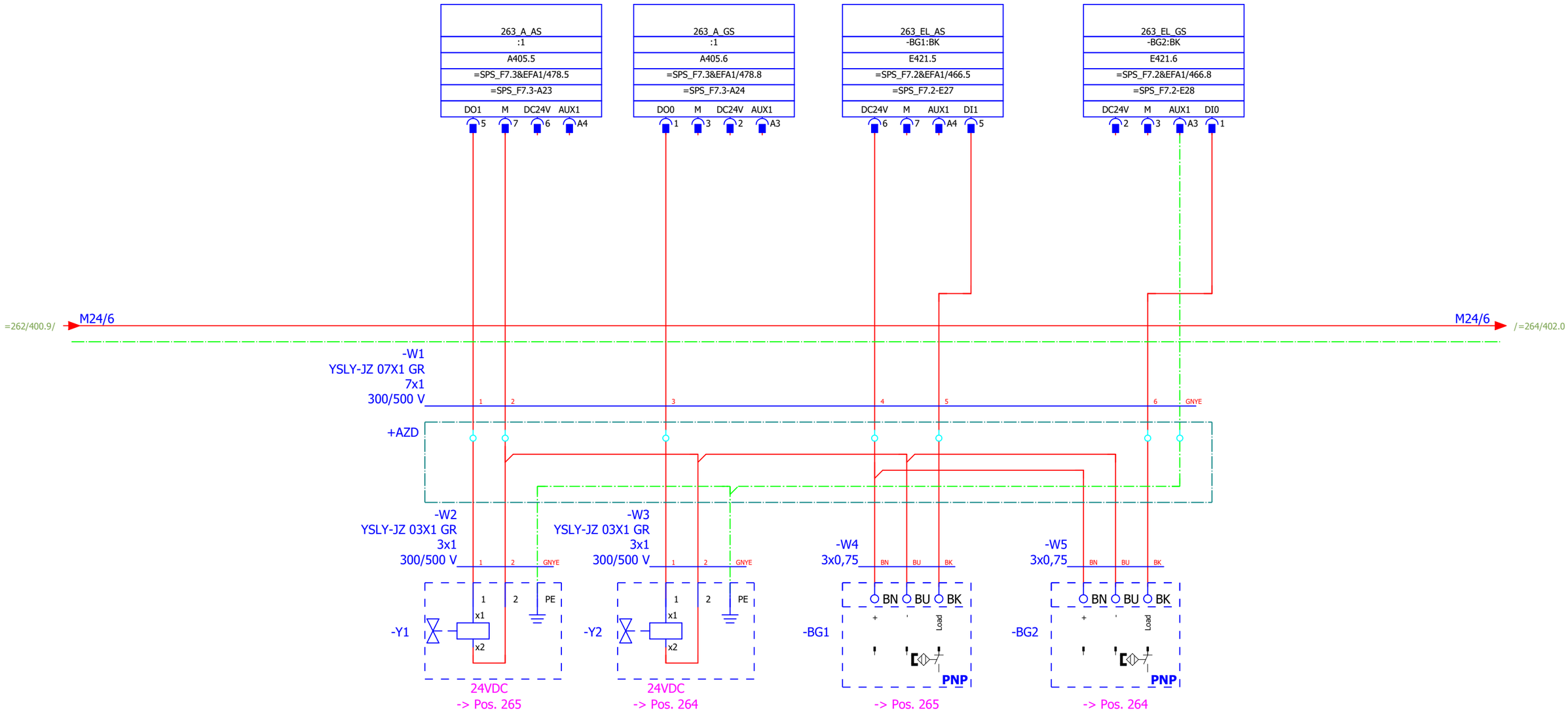

=262/400

=264+F25/179

			Date	12.12.2019	Mixed feed plant Golden Poultry	BEYTEC	Flap box		= 263	
			Ed.	willen					+ F27	
			Appr		field 7 external signals			1 : 1	Part II	Page 401
Modification	Date	Name	Original	V:\EPLAN\Projekte\Company\Replace\Beytec\2018\Feed Mill Alssad.elk	Replaced by	... your gateway to success				Page 605

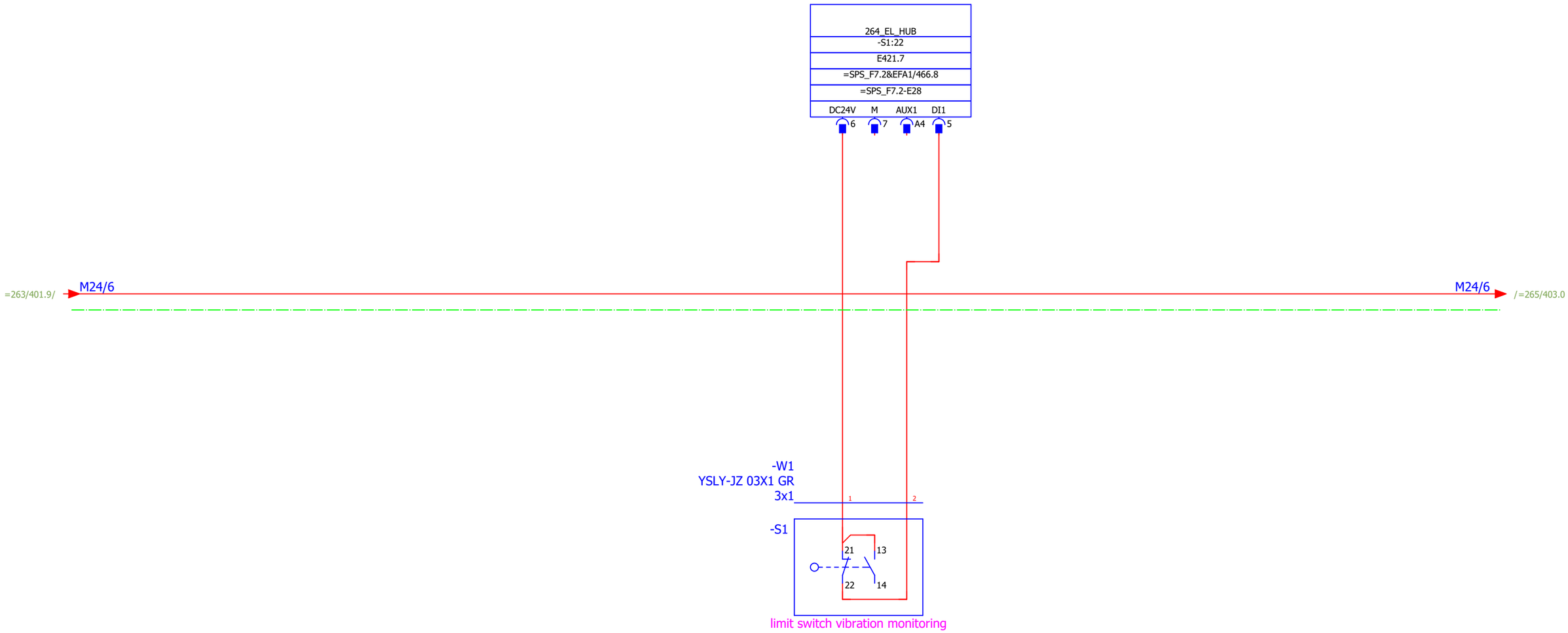

			Date	12.12.2019	Mixed feed plant Golden Poultry	BEYTEC ... your gateway to success	vibration monitoring	= 264	
			Ed.	willen				+ F27	
			Appr		field 7 external signals			1 : 1 / Part II	Page 402
Modification	Date	Name	Original	V:\EPLAN\Projekte\Company\Replace\Beytec\2018\Feed Mill Alssad.elk	Replaced by				Page 605

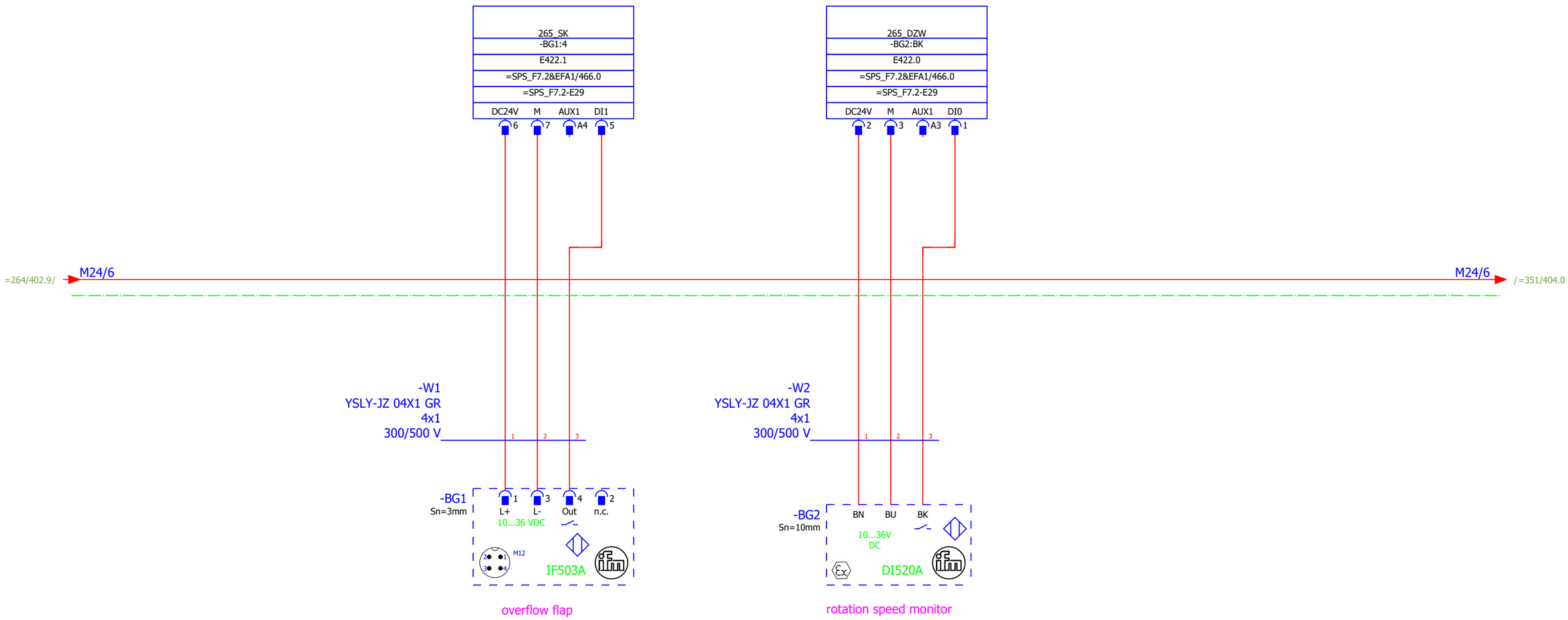
265_SK
-BG1:4
E422.1
=SPS_F7.2&EFA1/466.0
=SPS_F7.2-E29
DC24V M AUX1 DI1
6 7 A4 5
265_DZW
-BG2:BK
E422.0
=SPS_F7.2&EFA1/466.0
=SPS_F7.2-E29
DC24V M AUX1 DI0
2 3 A3 1
=264/402.9/
M24/6
M24/6
/=351/404.0
-W1
YSLY-JZ 04X1 GR
4x1
300/500 V
-W2
YSLY-JZ 04X1 GR
4x1
300/500 V
-BG1
Sn=3mm
L+ L- Out n.c.
10...36 VDC
M12
IF503A
overflow flap
-BG2
Sn=10mm
BN BU BK
10...36V
DC
DI520A
rotation speed monitor

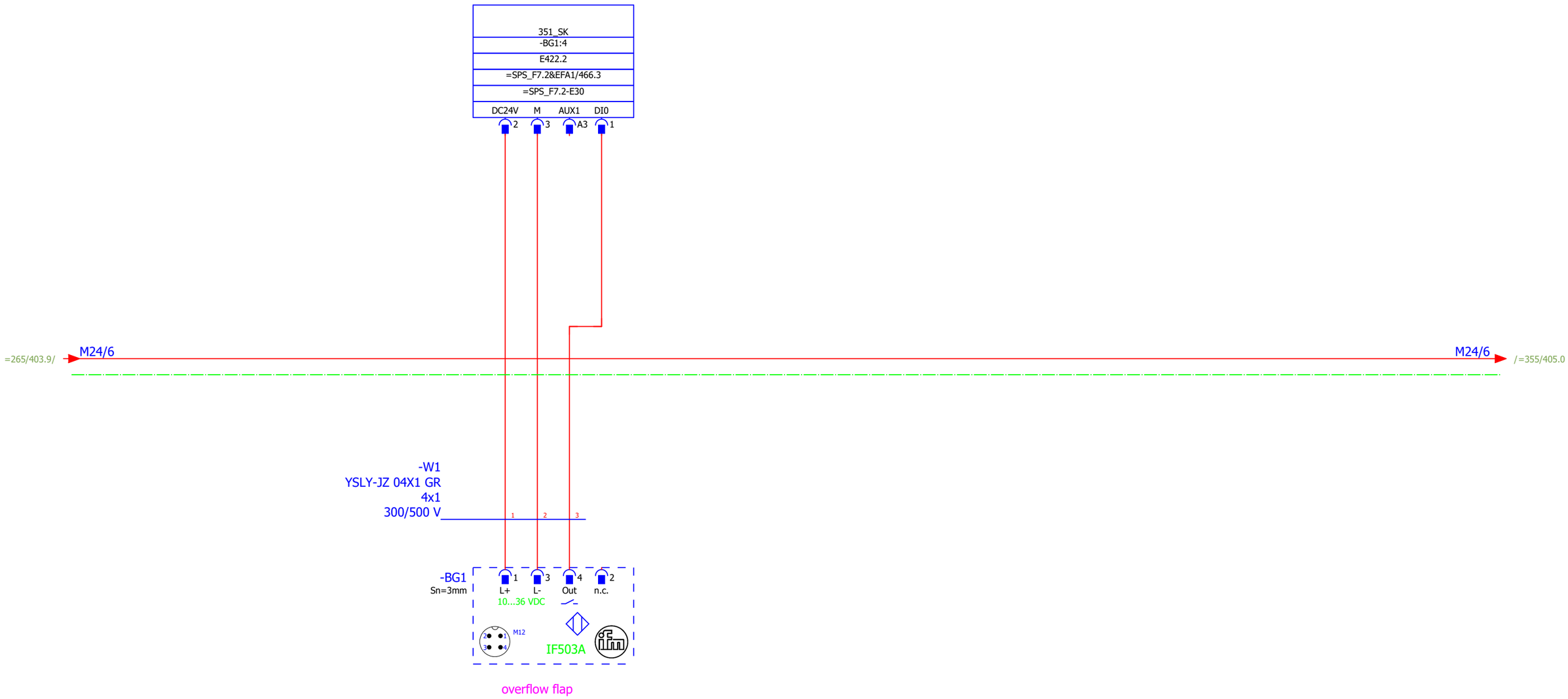
351_SK
-BG1:4
E422.2
=SPS_F7.2&EFA1/466.3
=SPS_F7.2-E30
DC24V
M
AUX1
DI0
2
3
A3
1
=265/403.9/
M24/6
M24/6
/=355/405.0
-W1
YSLY-JZ 04X1 GR
4x1
300/500 V
1
2
3
-BG1
Sn=3mm
1
L+
3
L-
4
Out
2
n.c.
10...36 VDC
M12
IF503A
overflow flap

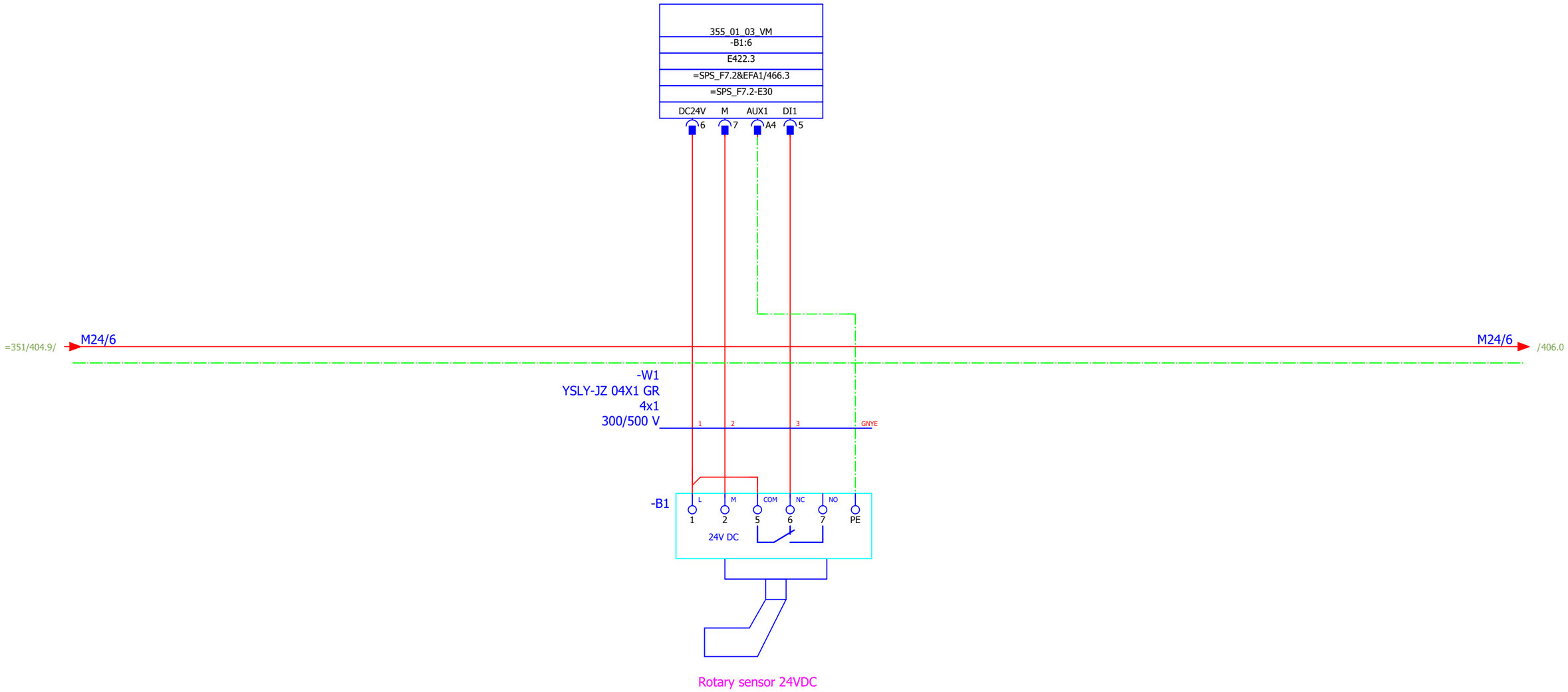

			Date	12.12.2019	Mixed feed plant Golden Poultry	BEYTEC ... your gateway to success	high-level-indicatorcooler 2			= 355	
			Ed.	willen						+ F27	
			Appr		field 7 external signals			1 : 1	Part II	Page 405	
Modification	Date	Name	Original	V:\EPLAN\Projekte\Company\Replace\Beytec\2018\Feed Mill Alssad.elk	Replaced by					Page 605	

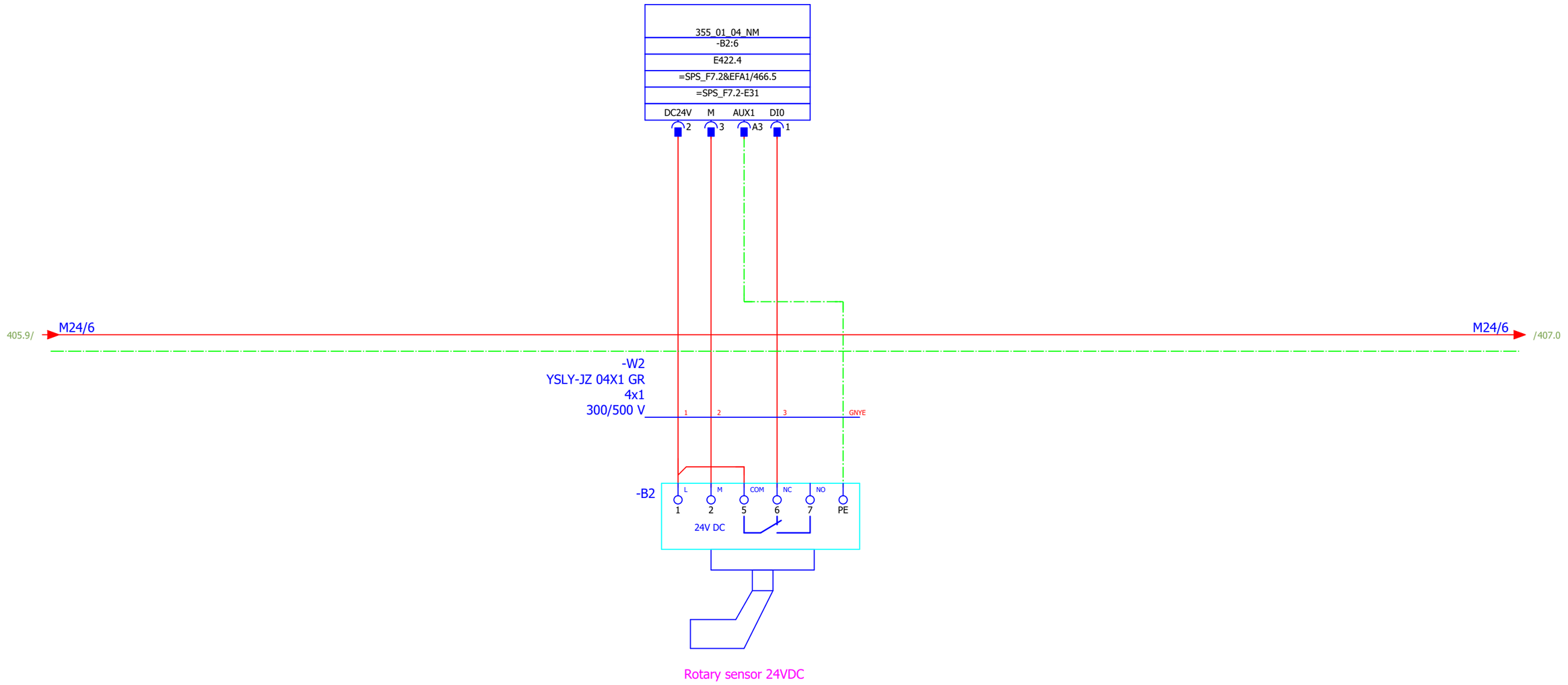

Rotary sensor 24VDC

			Date	12.12.2019	Mixed feed plant Golden Poultry	BEYTEC ... your gateway to success	level detector cooler	= 355	
			Ed.	willen				+ F27	
			Appr		field 7 external signals			1 : 1 / Part II	Page 406
Modification	Date	Name	Original	V:\EPLAN\Projekte\Company\Replace\Beytec\2018\Feed Mill Alssad.elk	Replaced by				Page 605

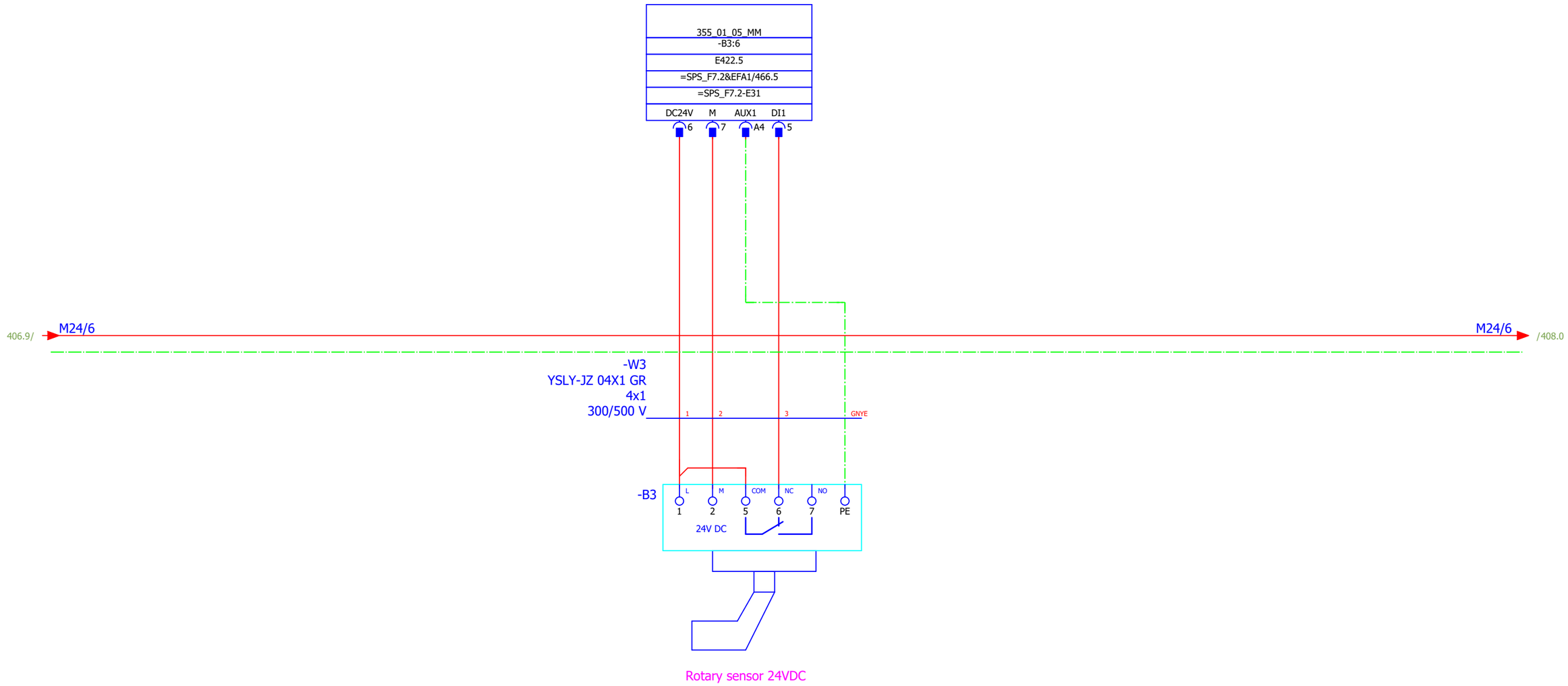

			Date	12.12.2019	Mixed feed plant Golden Poultry	BEYTEC ... your gateway to success	matarial-indicator cooler 2	= 355	
			Ed.	willen				+ F27	
			Appr		field 7 external signals			1 : 1 / Part II	Page 407
Modification	Date	Name	Original	V:\EPLAN\Projekte\Company\Replace\Beytec\2018\Feed Mill Alssad.elk	Replaced by				Page 605

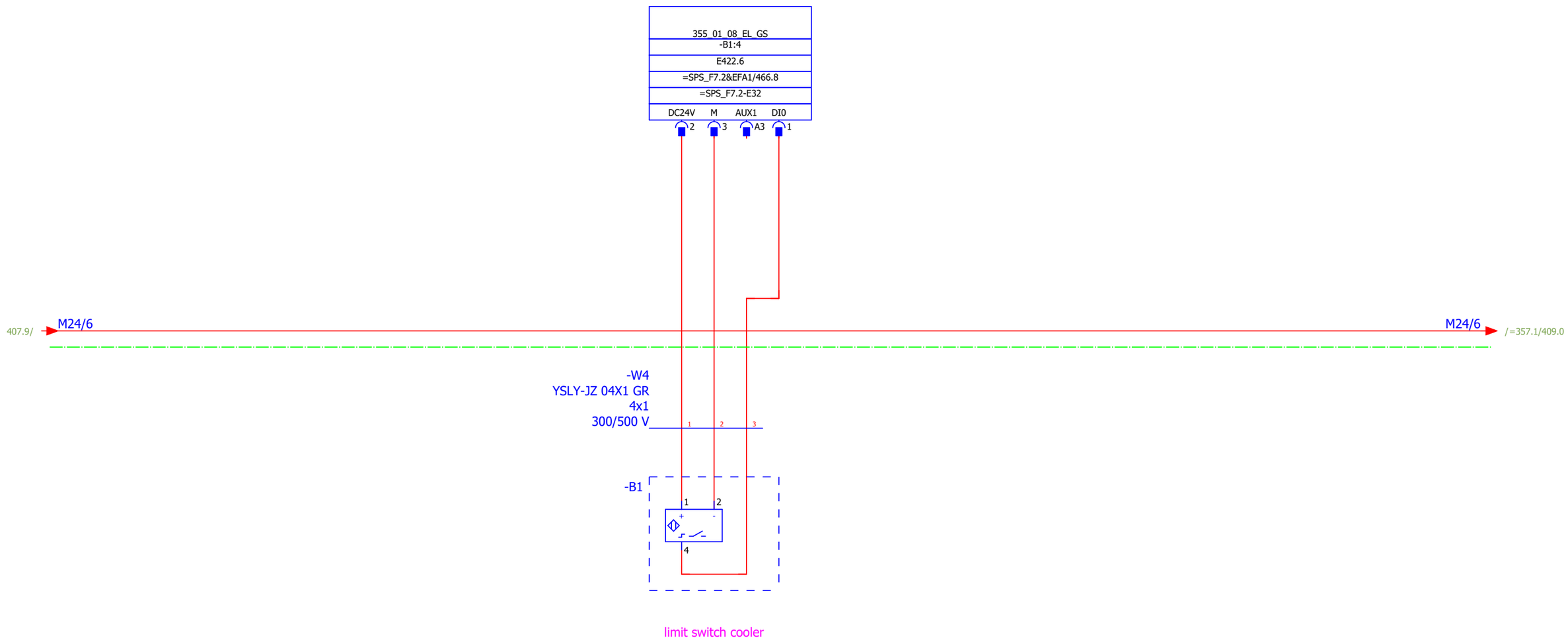

=356+F25/192

			Date	12.12.2019	Mixed feed plant Golden Poultry	BEYTEC ... your gateway to success	limit switch discharge cooler 2	= 355	
			Ed.	willen				+ F27	
			Appr		field 7 external signals			1 : 1 / Part II	Page 408
Modification	Date	Name	Original	V:\EPLAN\Projekte\Company\Replace\Beytec\2018\Feed Mill Alssad.elk	Replaced by				Page 605

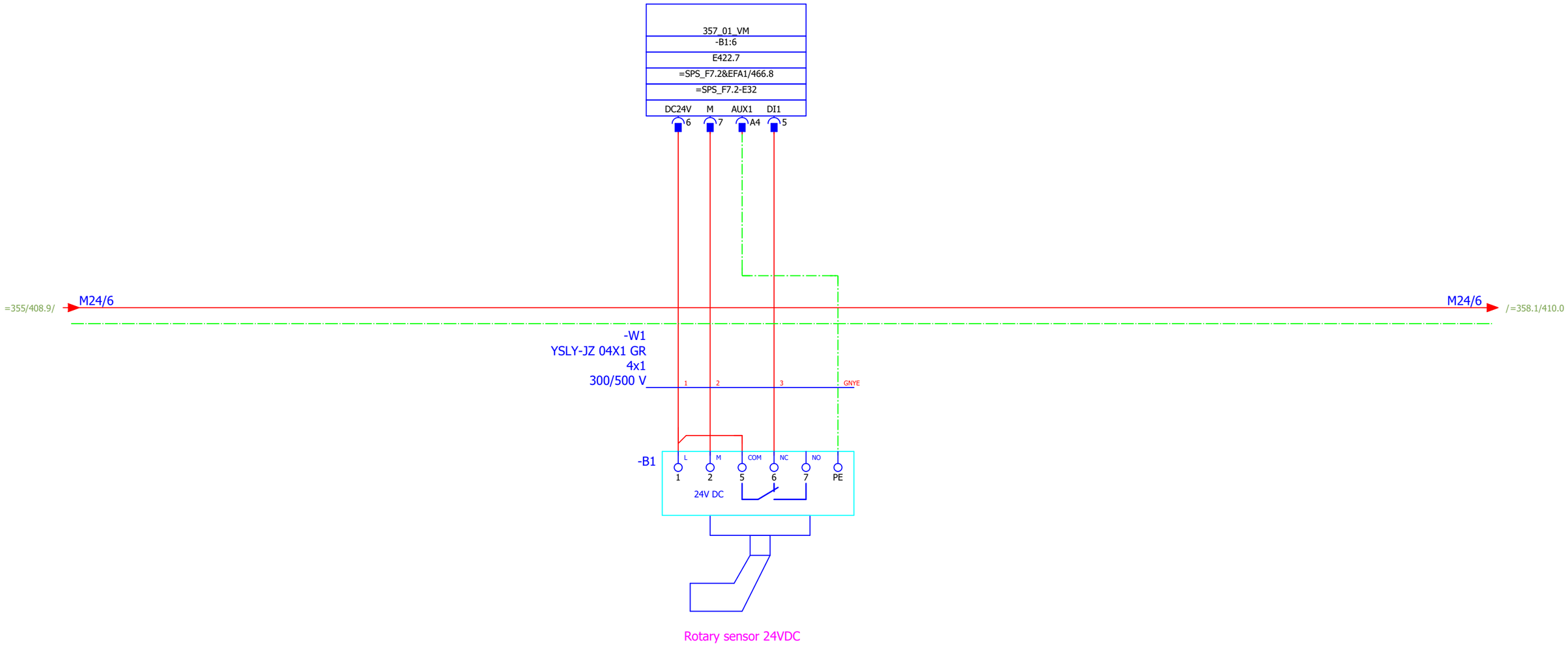
357_01_VM
-B1:6
E422.7
=SPS_F7.2&EFA1/466.8
=SPS_F7.2-E32
DC24V
M
AUX1
DI1
6
7
A4
5
=355/408.9/
M24/6
M24/6
/=358.1/410.0
-W1
YSLY-JZ 04X1 GR
4x1
300/500 V
1
2
3
GNYE
-B1
L
M
COM
NC
NO
1
2
5
6
7
PE
24V DC
Rotary sensor 24VDC

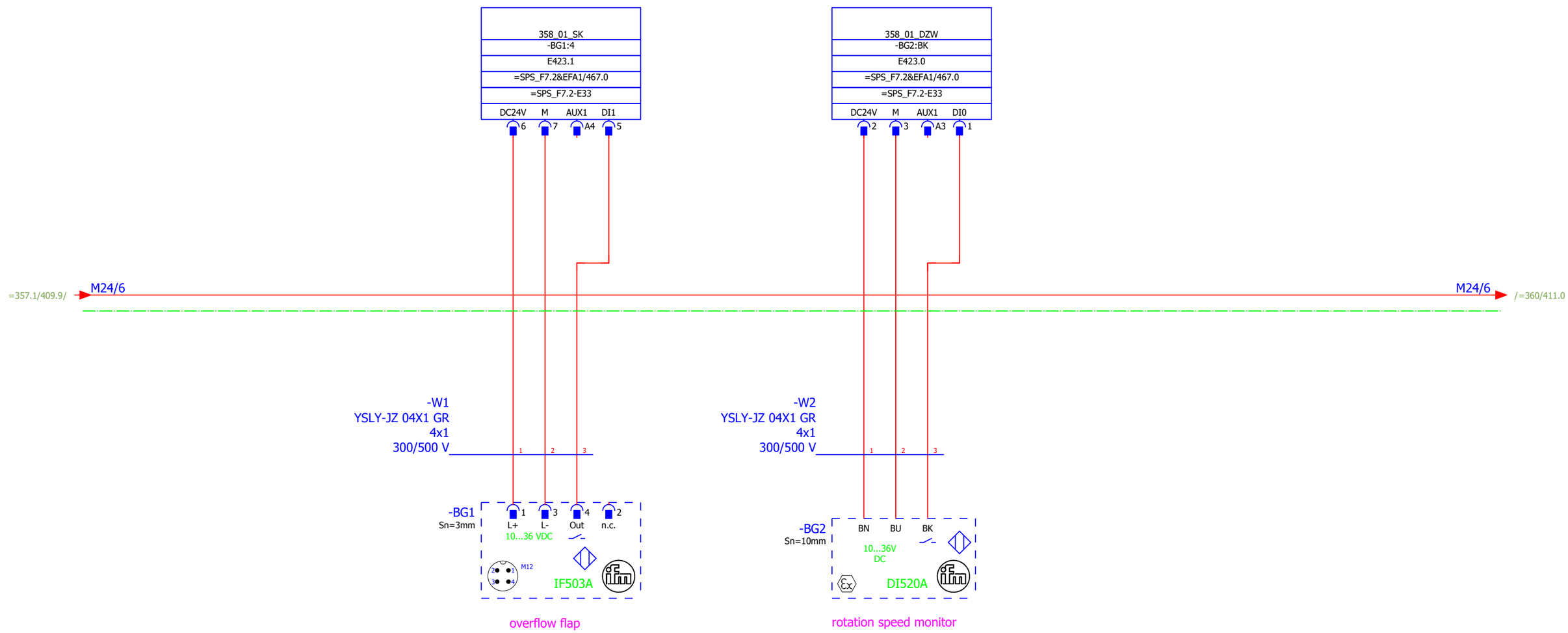
358_01_SK
-BG1:4
E423.1
=SPS_F7.2&EFA1/467.0
=SPS_F7.2-E33
DC24V M AUX1 DI1
6 7 A4 5
358_01_DZW
-BG2:BK
E423.0
=SPS_F7.2&EFA1/467.0
=SPS_F7.2-E33
DC24V M AUX1 DI0
2 3 A3 1
=357.1/409.9/
M24/6
M24/6
/=360/411.0
-W1
YSLY-JZ 04X1 GR
4x1
300/500 V
-W2
YSLY-JZ 04X1 GR
4x1
300/500 V
-BG1
Sn=3mm
L+ L- Out n.c.
10...36 VDC
M12
IF503A
overflow flap
-BG2
Sn=10mm
BN BU BK
10...36V
DC
DI520A
rotation speed monitor

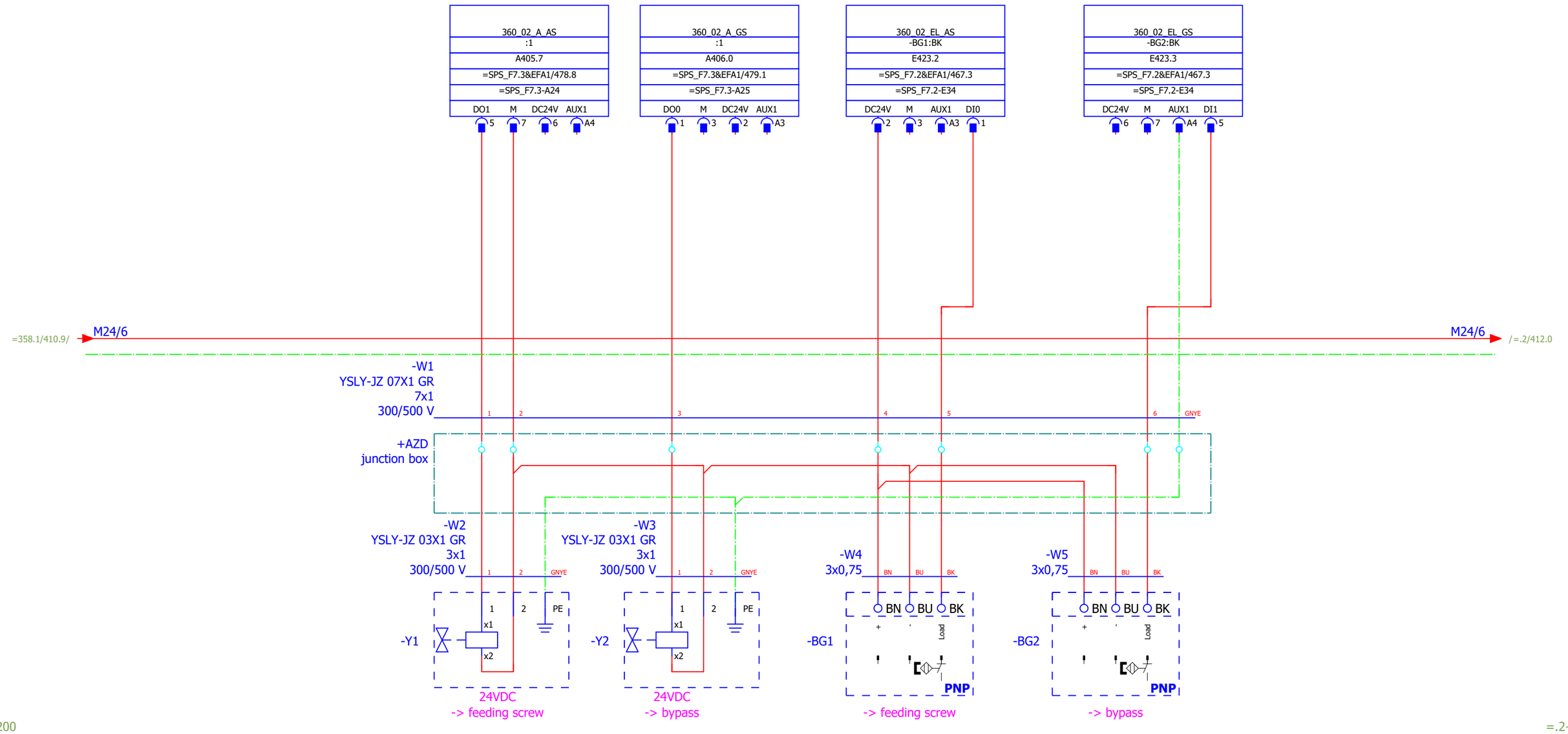

+F25/200

=.2+F25/201

			Date	12.12.2019	Mixed feed plant Golden Poultry	BEYTEC ... your gateway to success	bypass flap	= 360	
			Ed.	willen				+ F27	
			Appr		field 7 external signals			1 : 1	Part II
Modification	Date	Name	Original	V:\EPLAN\Projekte\Company\Beytec\2018\Feed Mill Alssad.elk	Replaced by			Page 411	
								Page 605	

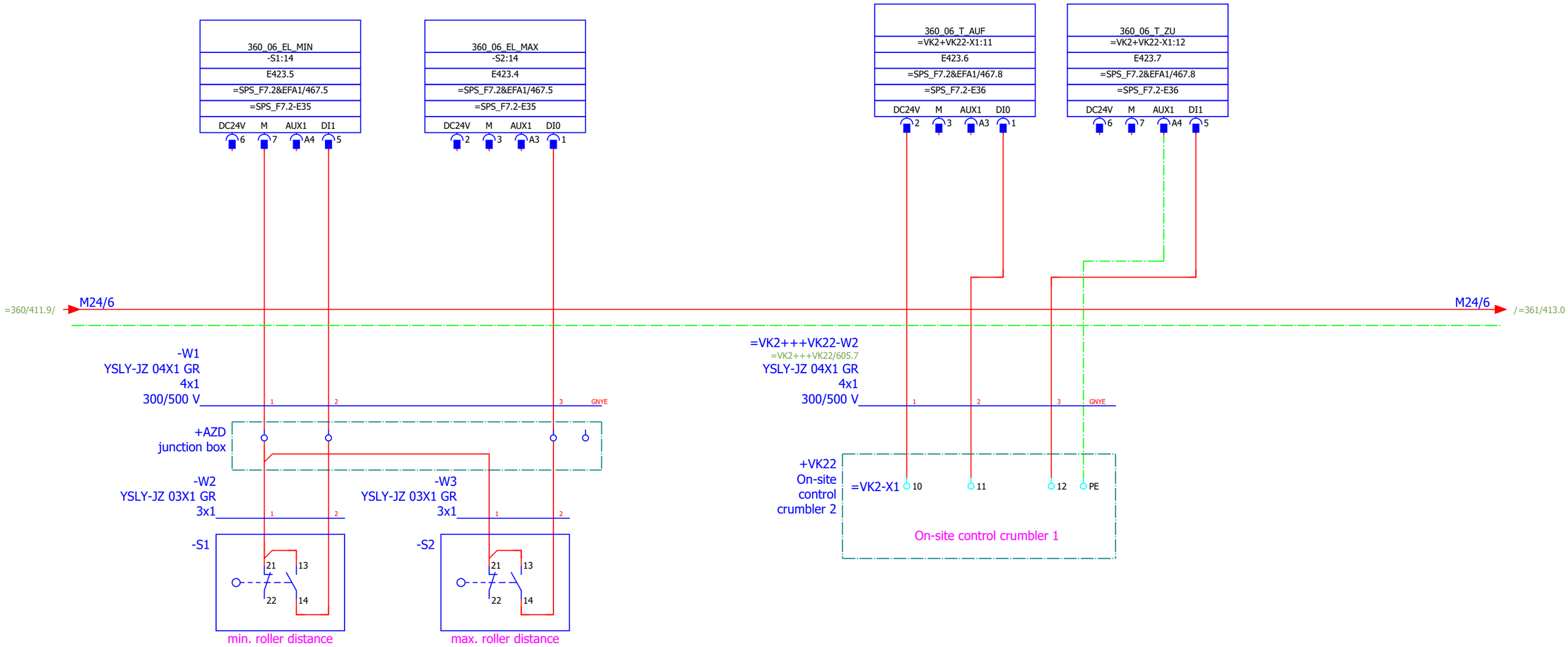

+F25/201

=361+F25/202

			Date	12.12.2019	Mixed feed plant Golden Poultry	BEYTEC ... your gateway to success	roller distance crumbler 2	= 360.2	
			Ed.	willen				+ F27	
			Appr		field 7 external signals			1 : 1 Part II	Page 412
Modification	Date	Name	Original	V:\EPLAN\Projekte\Company\Replace\Beytec\2018\Feed Mill Alssad.elk		Replaced by			Page 605

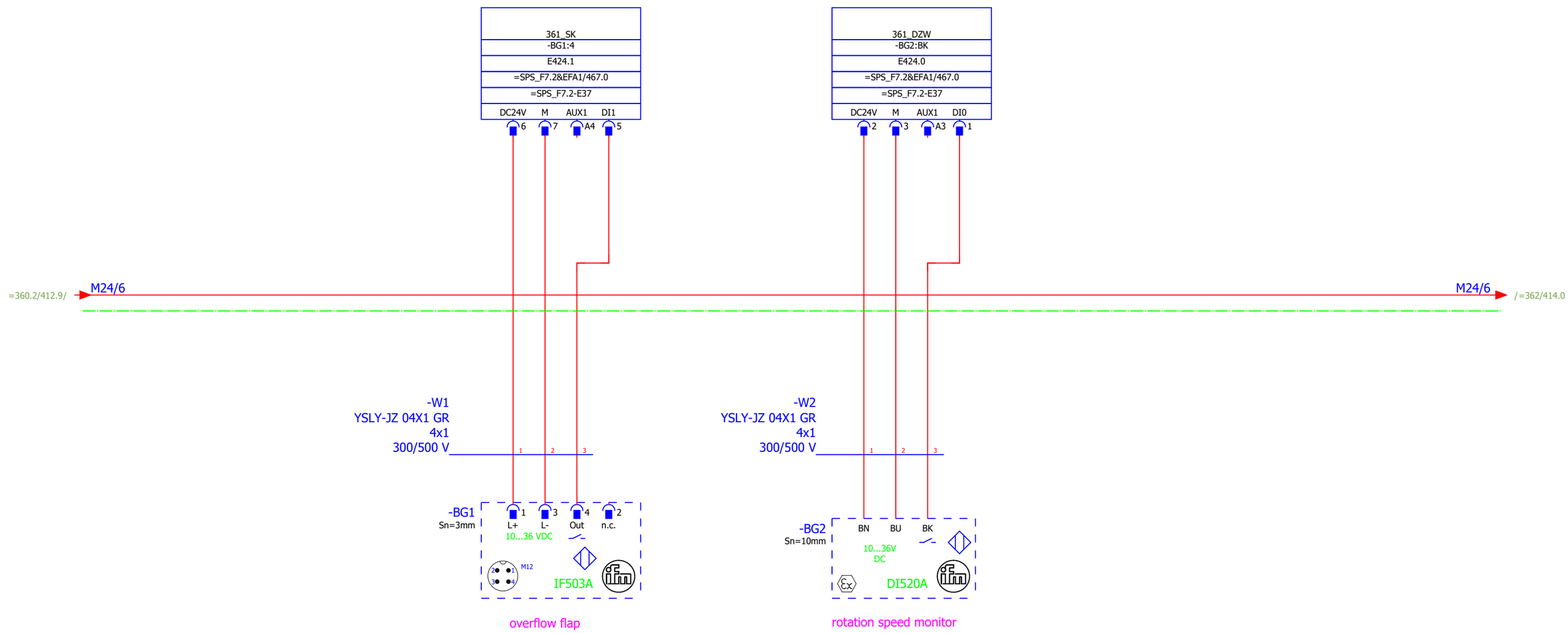
361_SK
-BG1:4
E424.1
=SPS_F7.2&EFA1/467.0
=SPS_F7.2-E37
DC24V M AUX1 DI1
6 7 A4 5
361_DZW
-BG2:BK
E424.0
=SPS_F7.2&EFA1/467.0
=SPS_F7.2-E37
DC24V M AUX1 DI0
2 3 A3 1
=360.2/412.9/
M24/6
M24/6
/=362/414.0
-W1
YSLY-JZ 04X1 GR
4x1
300/500 V
-W2
YSLY-JZ 04X1 GR
4x1
300/500 V
-BG1
Sn=3mm
L+ L- Out n.c.
10...36 VDC
M12
IF503A
overflow flap
-BG2
Sn=10mm
BN BU BK
10...36V
DC
DI520A
rotation speed monitor

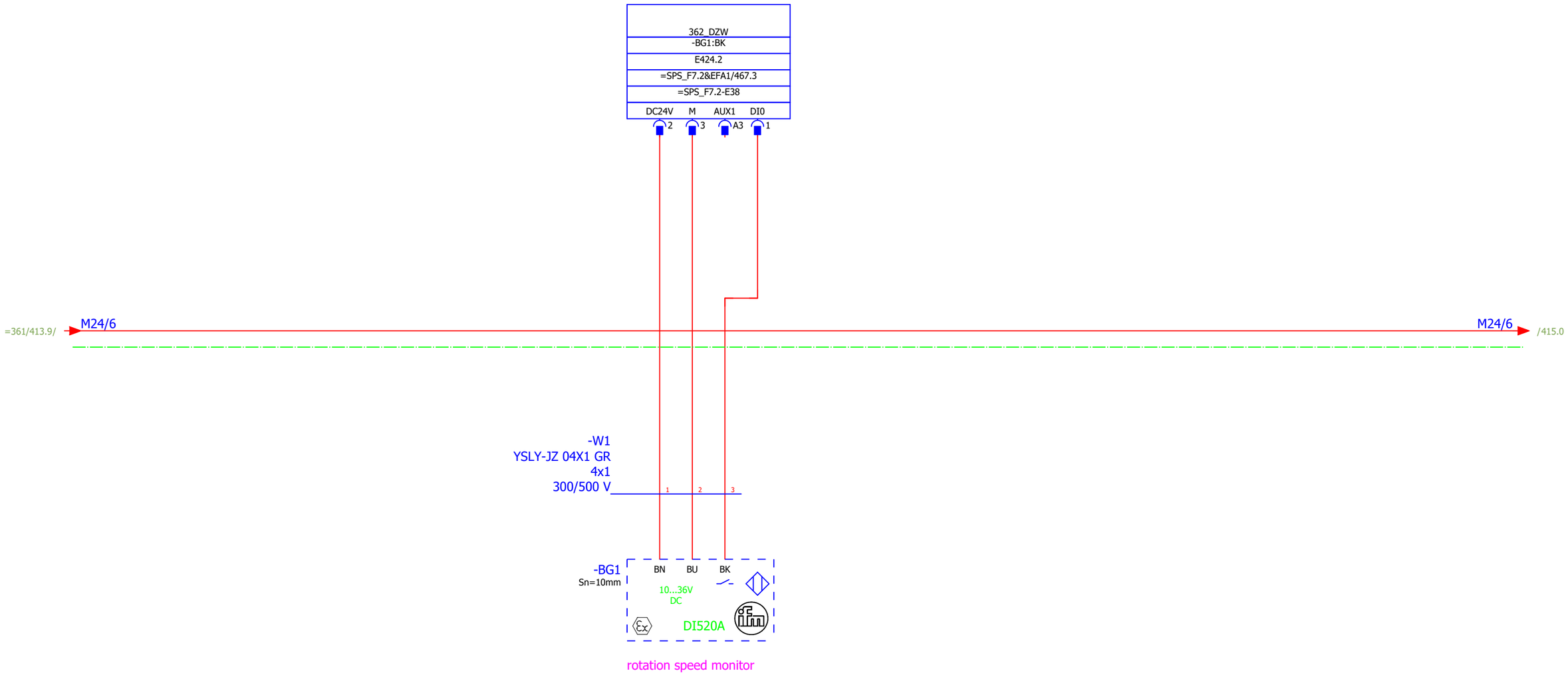

			Date	12.12.2019	Mixed feed plant Golden Poultry	BEYTEC ... your gateway to success	elevator rpm		= 362	
			Ed.	willen					+ F27	
			Appr		field 7 external signals			1 : 1	Part II	Page 414
Modification	Date	Name	Original	V:\EPLAN\Projekte\Company\Replacement\2018\Feed Mill Alssad.elk	Replaced by					Page 605

Replaced by BEYTEC

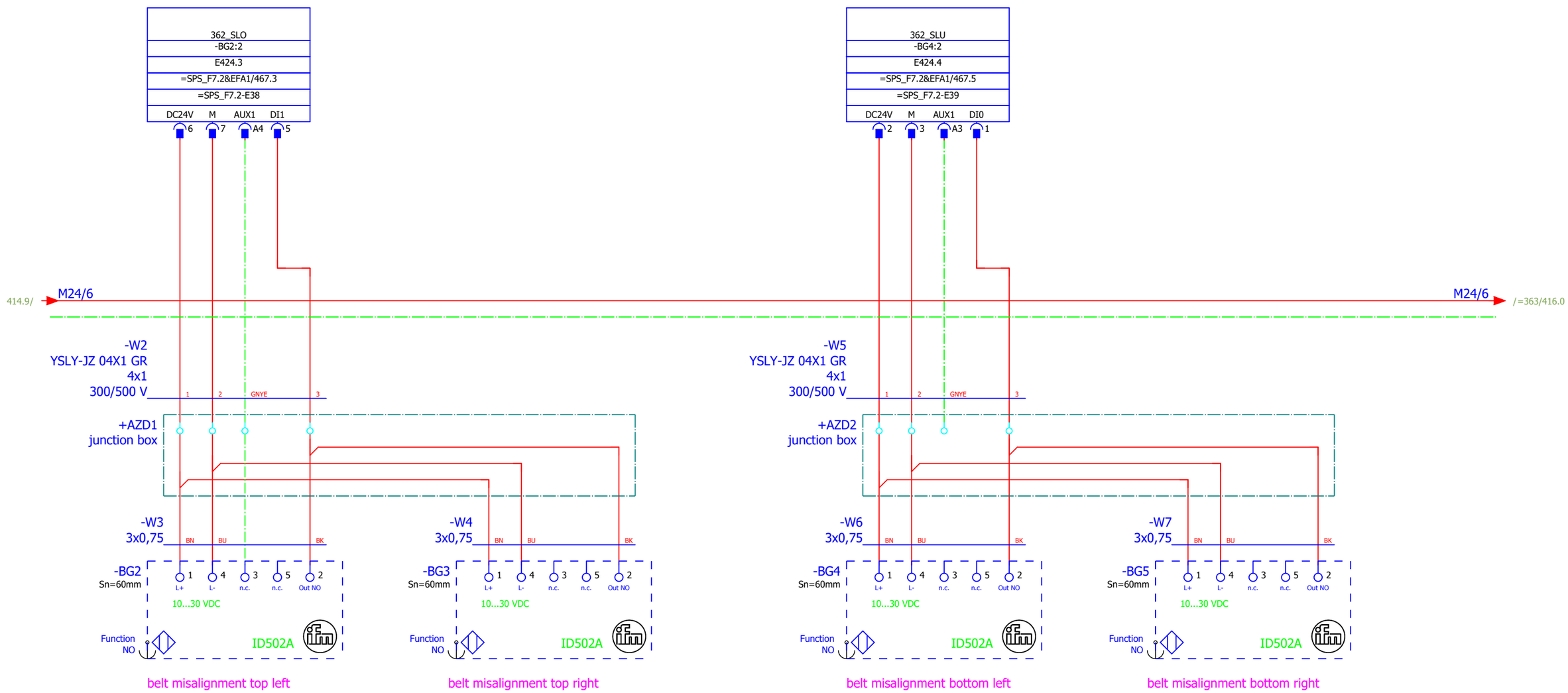

			Date	12.12.2019	Mixed feed plant Golden Poultry	BEYTEC	elevator belt misalignment	= 362	
			Ed.	willen		... your gateway to success		+ F27	
			Appr		field 7 external signals		1 : 1	Part II	Page 415
Modification	Date	Name	Original	V:\EPLAN\Projekte\Company\Replace\Beytec\2018\Feed Mill Alssad.elk	Replaced by				Page 605

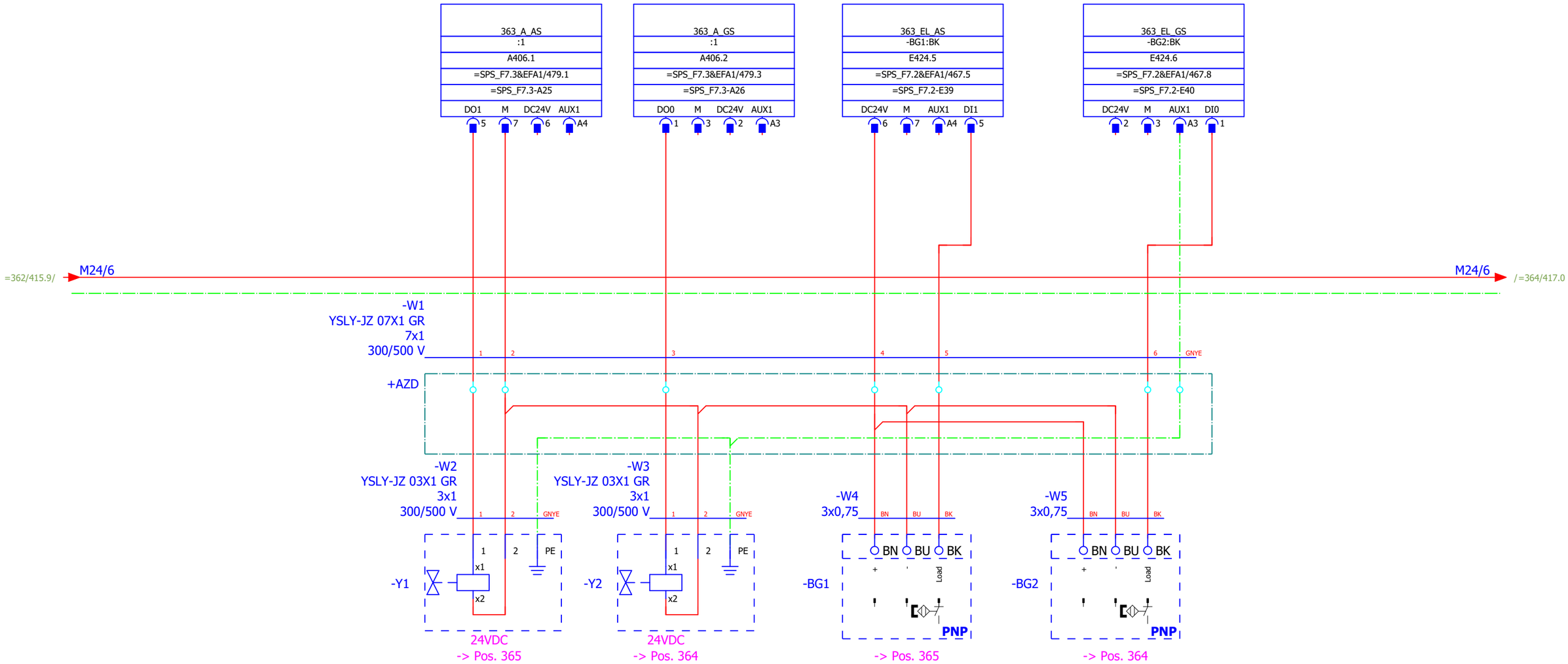

=362/415

=364+F25/204

			Date	12.12.2019	Mixed feed plant Golden Poultry	BEYTEC ... your gateway to success	Flap box	= 363	
			Ed.	willen				+ F27	
			Appr		field 7 external signals			1 : 1 / Part II	Page 416
Modification	Date	Name	Original	V:\EPLAN\Projekte\Company\Replace\Beytec\2018\Feed Mill Alssad.elk	Replaced by				Page 605

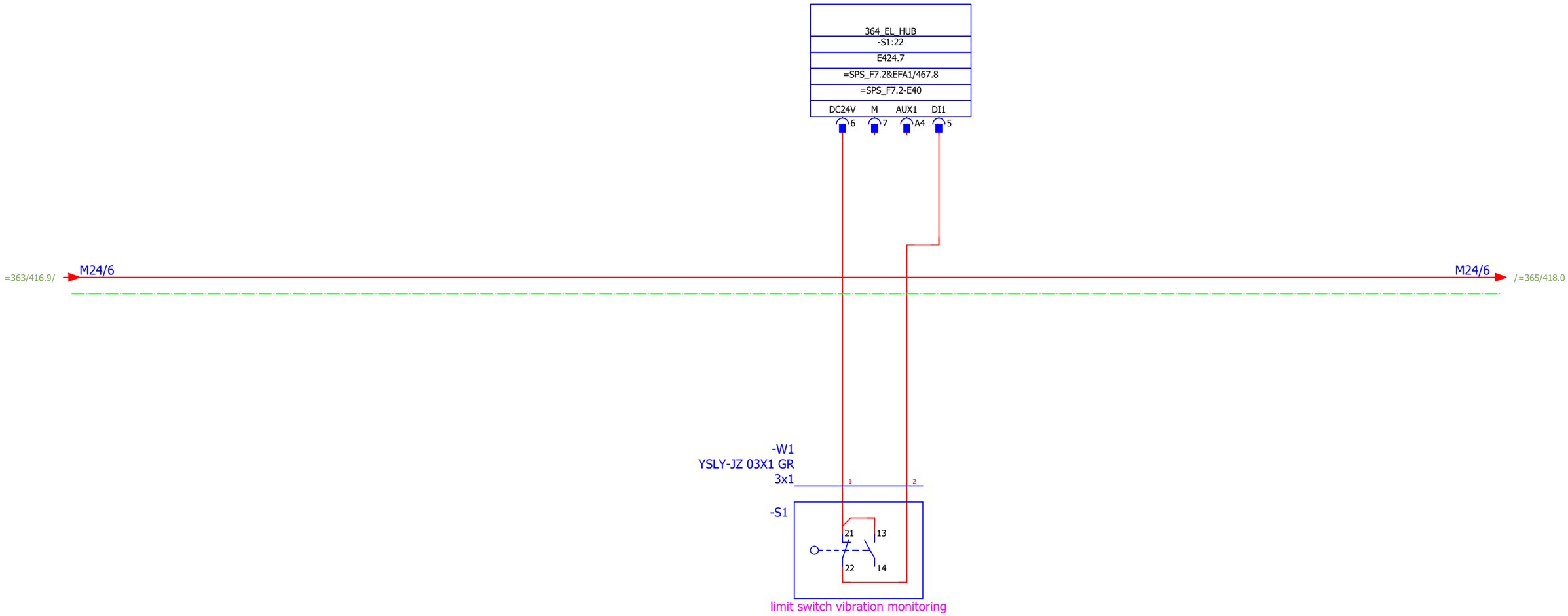
364_EL_HUB
-S1:22
E424.7
=SPS_F7.2&EFA1/467.8
=SPS_F7.2-E40
DC24V
M
AUX1
DI1
6
7
A4
5
=363/416.9/
M24/6
M24/6
/=365/418.0
-W1
YSLY-JZ 03X1 GR
3x1
1
2
-S1
21
13
22
14
limit switch vibration monitoring

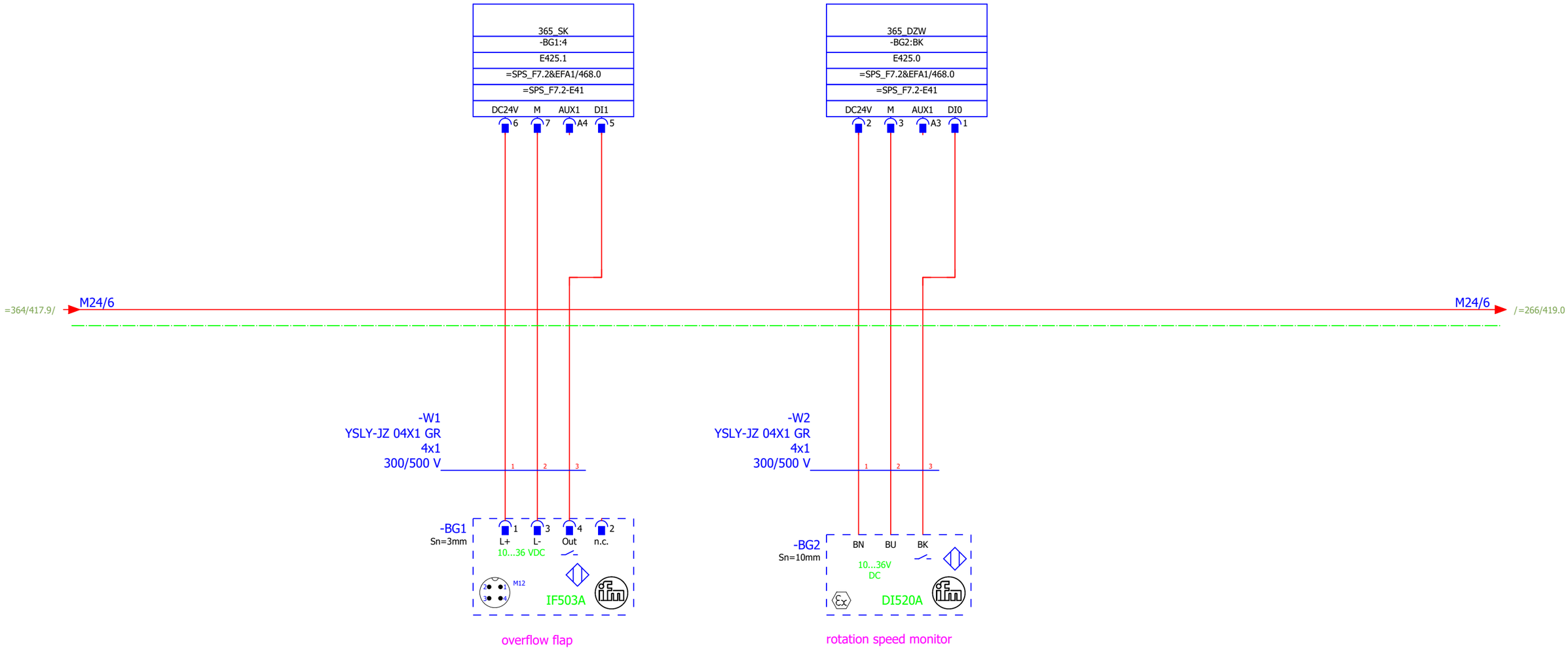

+F25/205

=265.1+F26/223

			Date	12.12.2019	Mixed feed plant Golden Poultry	BEYTEC ... your gateway to success	overflow flap & rotation speed monitor	= 365	
			Ed.	willen				+ F27	
			Appr		field 7 external signals		1 : 1	Part II	Page 418
Modification	Date	Name	Original	V:\EPLAN\Projekte\Company\Replace\Beytec\2018\Feed Mill Alssad.elk	Replaced by				Page 605

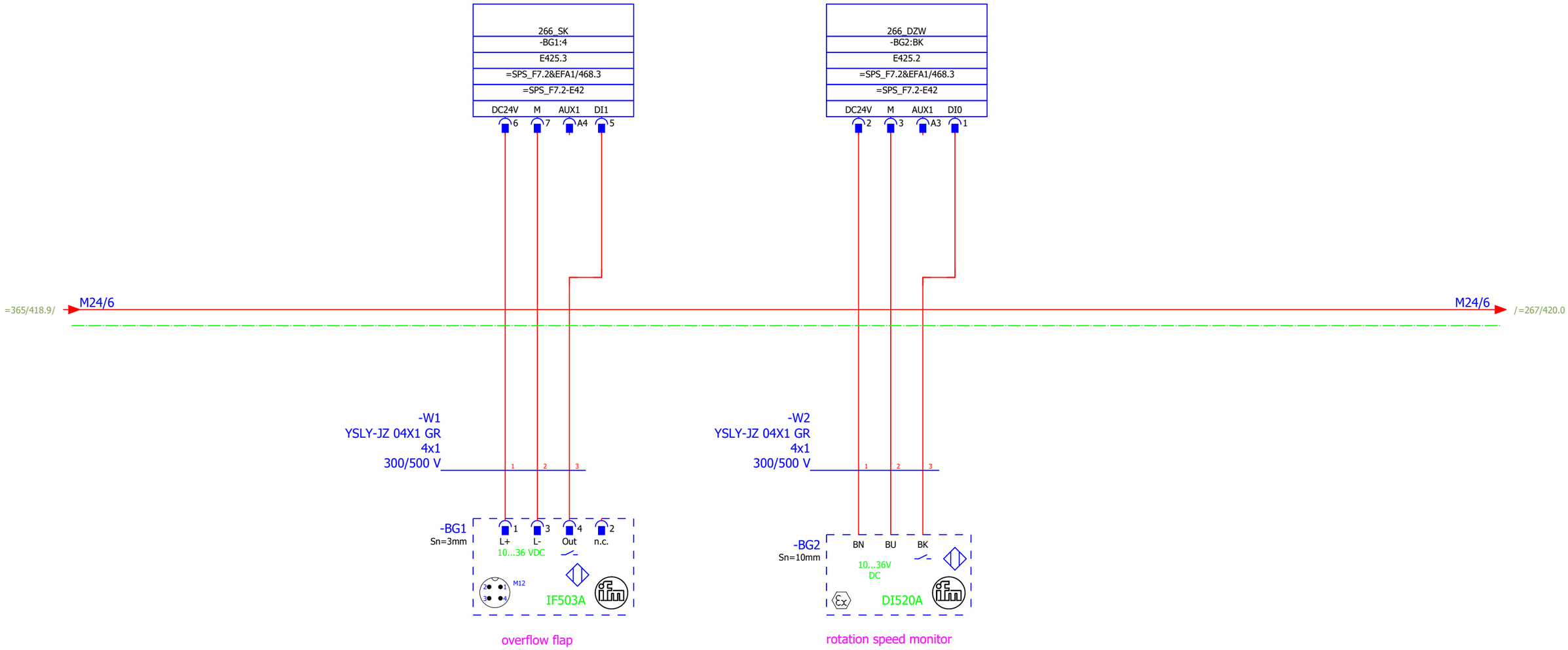

+F26/229

=.1+F26/230

			Date	12.12.2019	Mixed feed plant Golden Poultry	BEYTEC ... your gateway to success	overflow flap & rotation speed monitor	= 266	
			Ed.	willen				+ F27	
			Appr		field 7 external signals			1 : 1 Part II	Page 419
Modification	Date	Name	Original	V:\EPLAN\Projekte\Company\Replace\Beytec\2018\Feed Mill Alssad.elk	Replaced by				Page 605

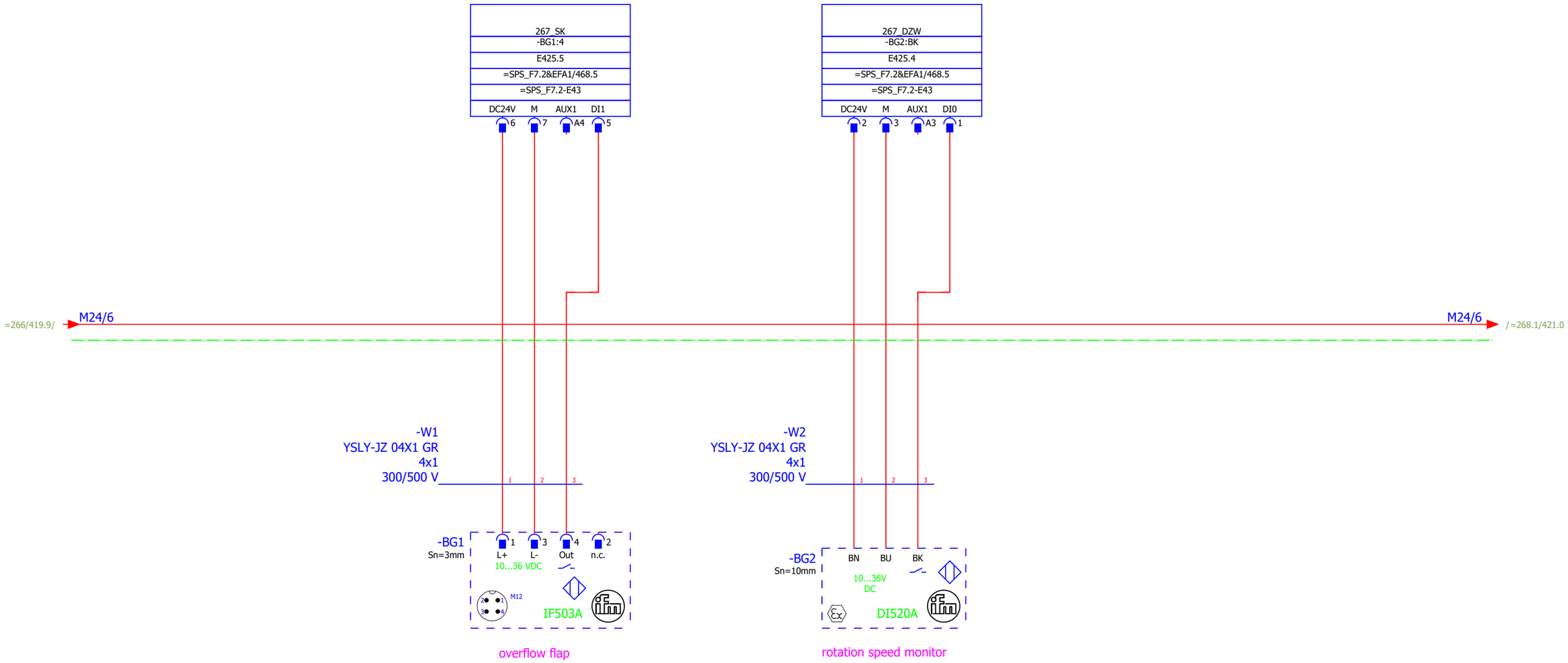

+F26/234

=.1+F26/235

			Date	12.12.2019	Mixed feed plant Golden Poultry	BEYTEC ... your gateway to success	overflow flap & rotation speed monitor	= 267	
			Ed.	willen				+ F27	
			Appr		field 7 external signals		1 : 1	Part II	Page 420
Modification	Date	Name	Original	V:\EPLAN\Projekte\Company\Replace\Beytec\2018\Feed Mill Alssad.elk	Replaced by				Page 605

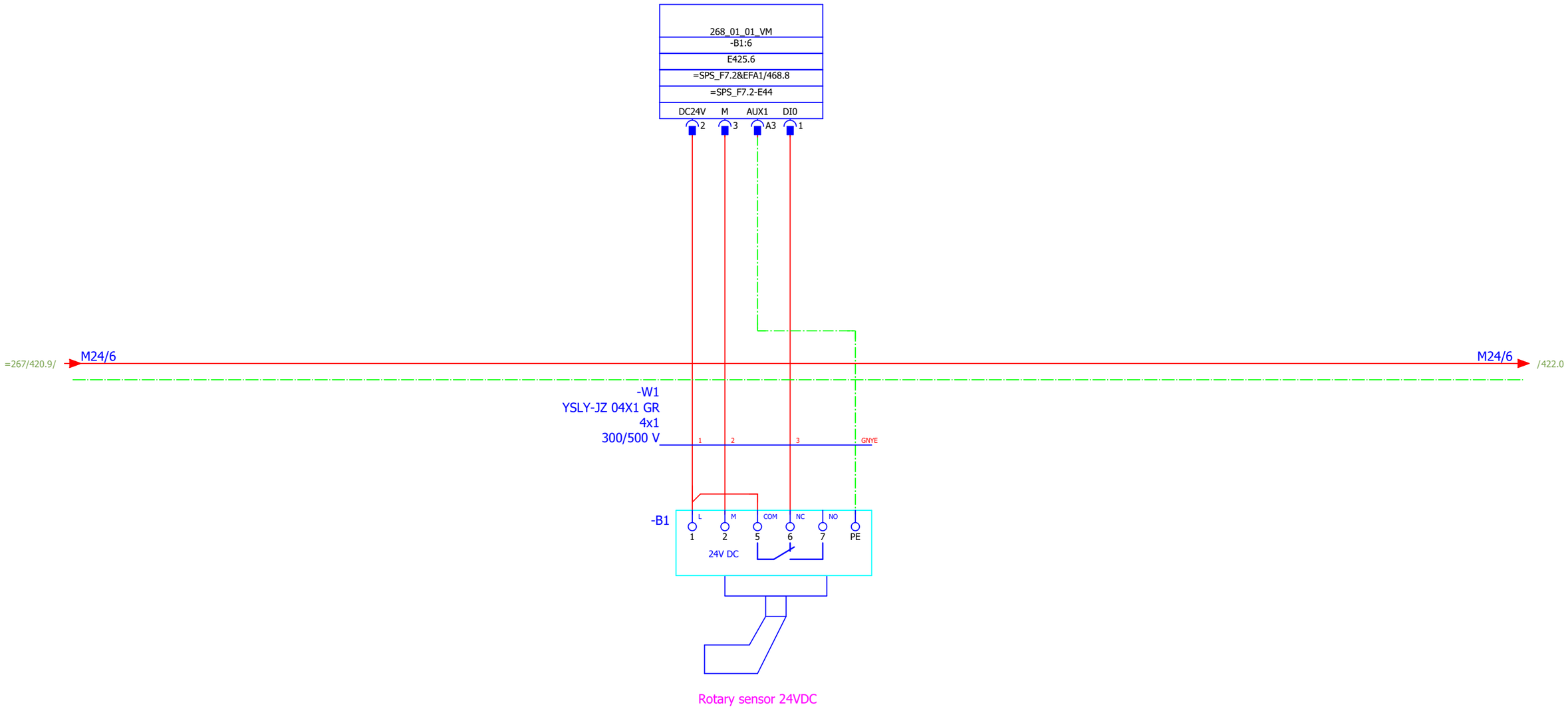
268_01_01_VM
-B1:6
E425.6
=SPS_F7.2&EFA1/468.8
=SPS_F7.2-E44
DC24V
M
AUX1
DI0
2
3
A3
1
=267/420.9/
M24/6
M24/6
/422.0
-W1
YSLY-JZ 04X1 GR
4x1
300/500 V
1
2
3
GNYE
-B1
L
M
COM
NC
NO
1
2
5
6
7
PE
24V DC
Rotary sensor 24VDC

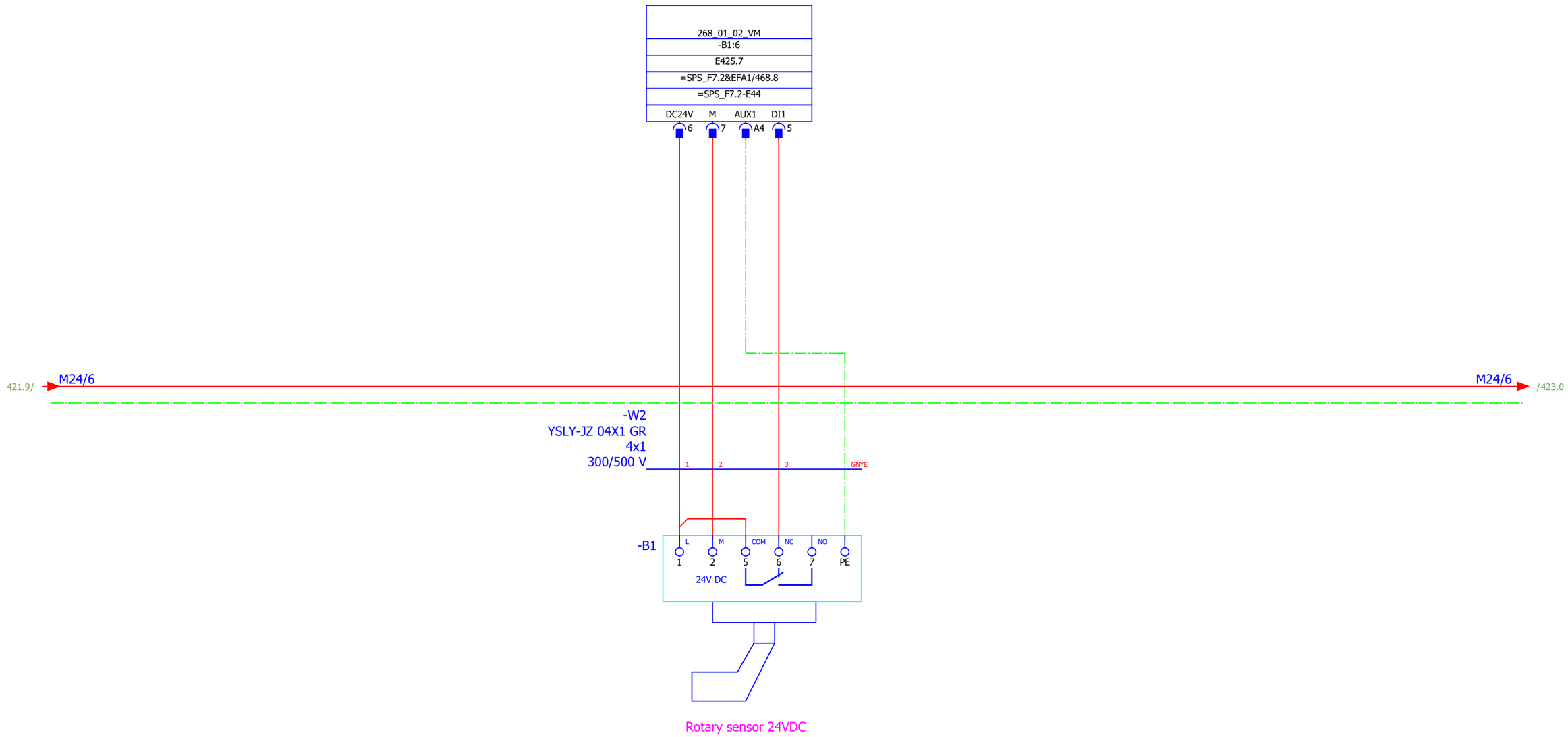

			Date	12.12.2019	Mixed feed plant Golden Poultry	BEYTEC ... your gateway to success	Full Silo 522		= 268.1	
			Ed.	willen					+ F27	
			Appr		field 7 external signals			1 : 1	Part II	Page 422
Modification	Date	Name	Original	V:\EPLAN\Projekte\Company\Replace\Beytec\2018\Feed Mill Alssad.elk	Replaced by					Page 605

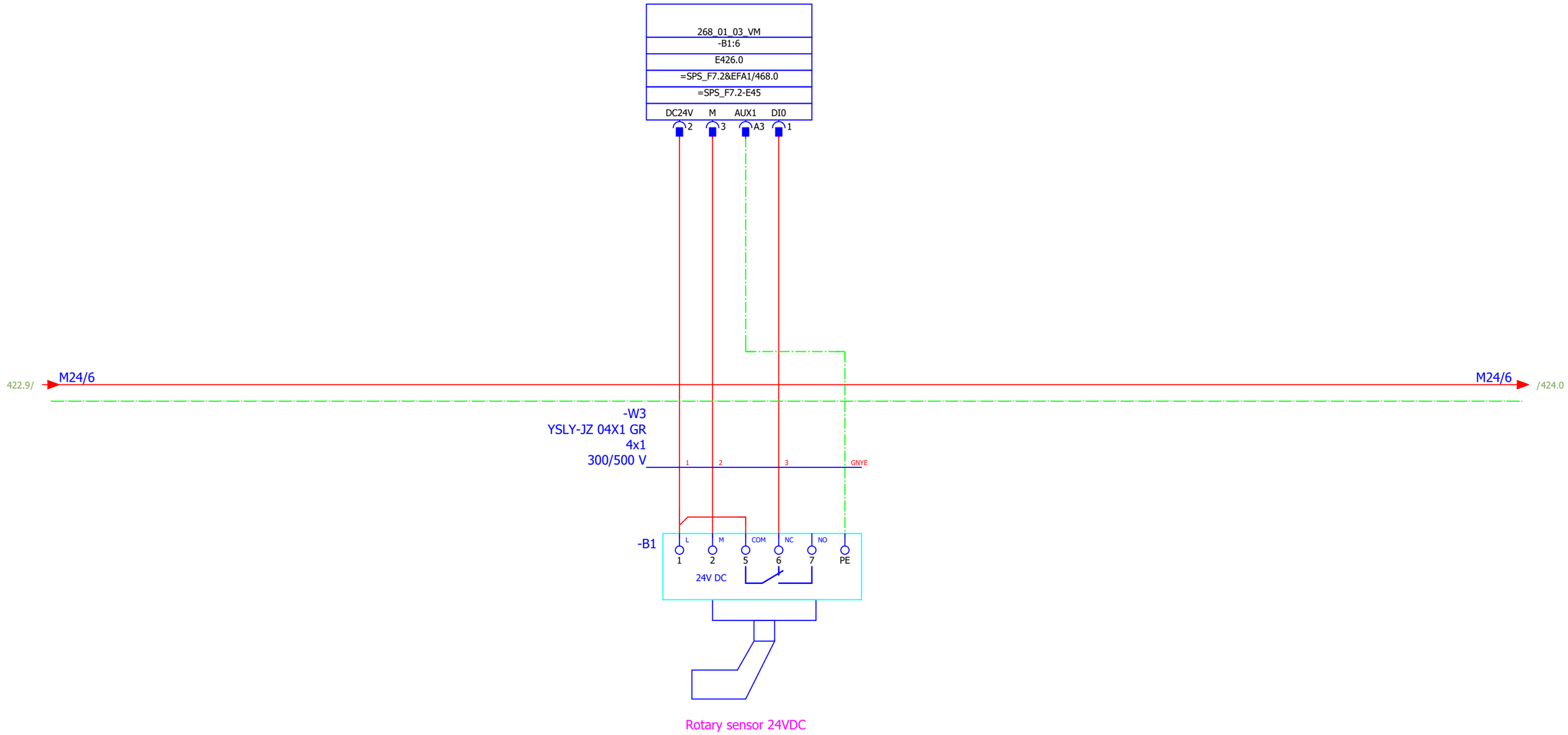

Rotary sensor 24VDC

			Date	12.12.2019	Mixed feed plant Golden Poultry	BEYTEC ... your gateway to success	Full Silo 523	= 268.1	
			Ed.	willen				+ F27	
			Appr		field 7 external signals			1 : 1 / Part II	Page 423
Modification	Date	Name	Original	V:\EPLAN\Projekte\Company\Replace\Beytec\2018\Feed Mill Alssad.elk	Replaced by				Page 605

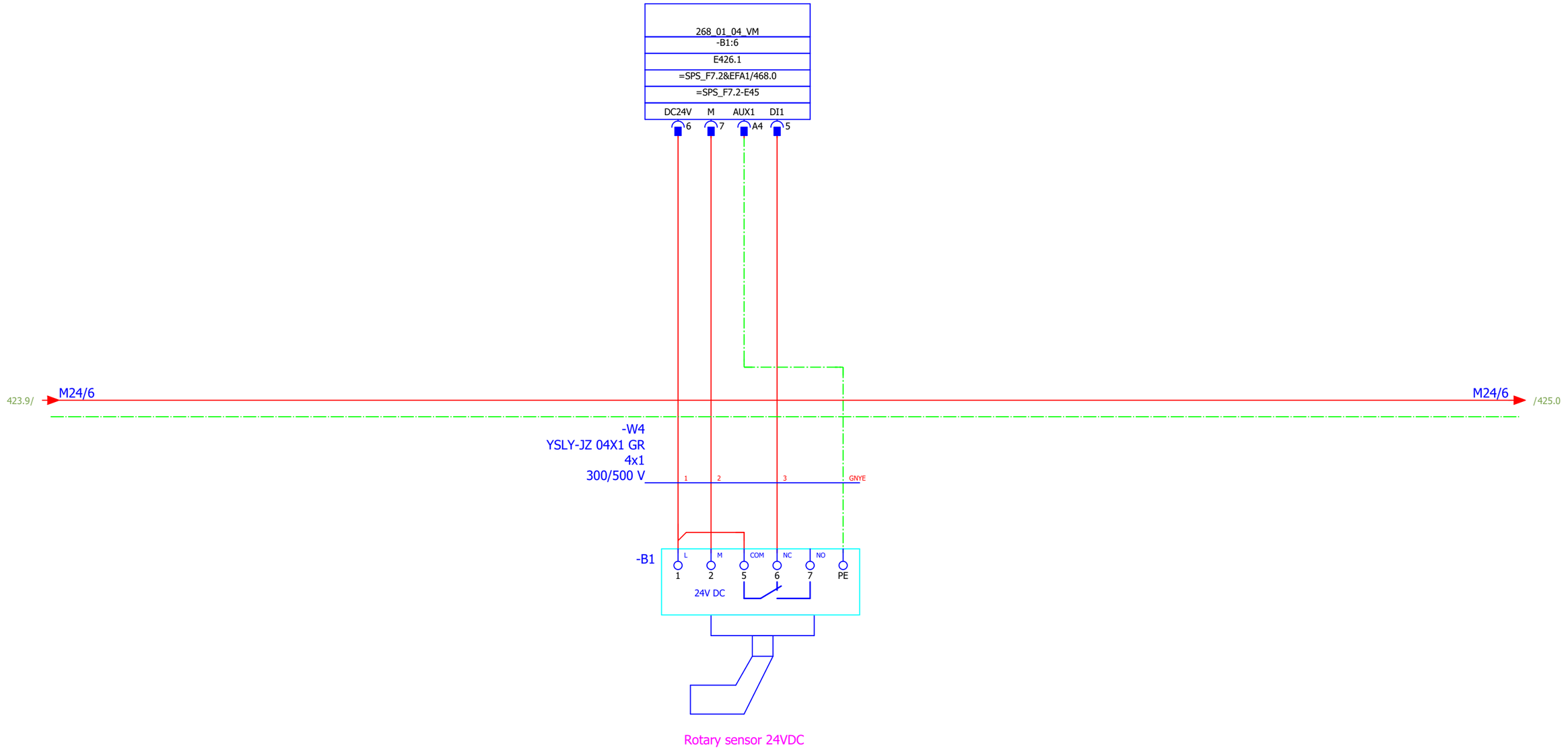

423

425

			Date	12.12.2019	Mixed feed plant Golden Poultry	BEYTEC ... your gateway to success	Full Silo 524	= 268.1	
			Ed.	willen				+ F27	
			Appr		field 7 external signals			1 : 1 Part II	Page 424
Modification	Date	Name	Original	V:\EPLAN\Projekte\Company\Replace\Beytec\2018\Feed Mill Alssad.elk	Replaced by				Page 605

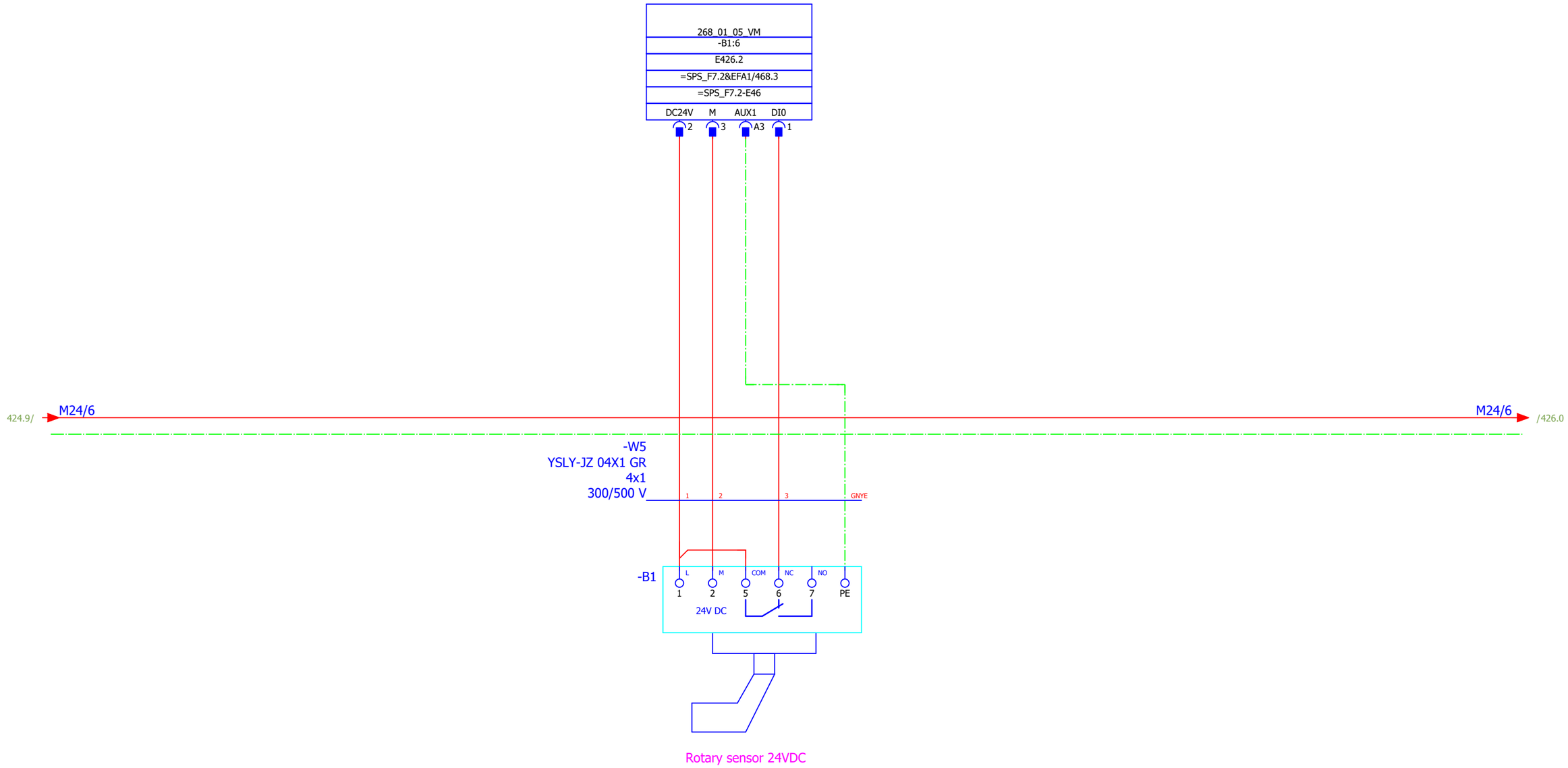

424

426

			Date	12.12.2019	Mixed feed plant Golden Poultry	BEYTEC ... your gateway to success	Full Silo 525	= 268.1	
			Ed.	willen				+ F27	
			Appr		field 7 external signals			1 : 1 Part II	Page 425
Modification	Date	Name	Original	V:\EPLAN\Projekte\Company\Replace\Beytec\2018\Feed Mill Alssad.elk	Replaced by				Page 605

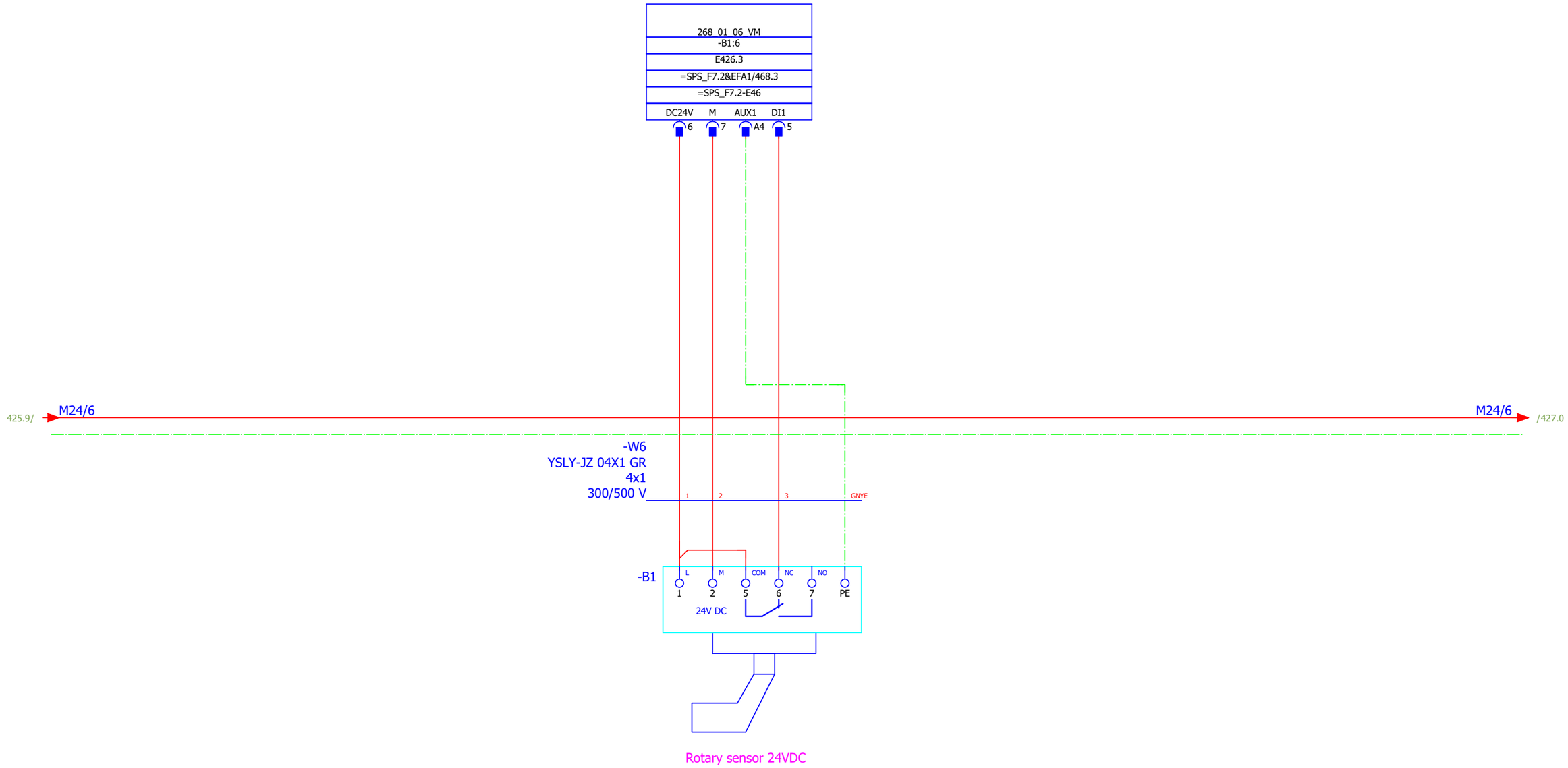

			Date	12.12.2019	Mixed feed plant Golden Poultry	BEYTEC ... your gateway to success	Full Silo 526	= 268.1	
			Ed.	willen				+ F27	
			Appr		field 7 external signals			1 : 1 / Part II	Page 426
Modification	Date	Name	Original	V:\EPLAN\Projekte\Company\Replace\Beytec\2018\Feed Mill Alssad.elk	Replaced by				Page 605

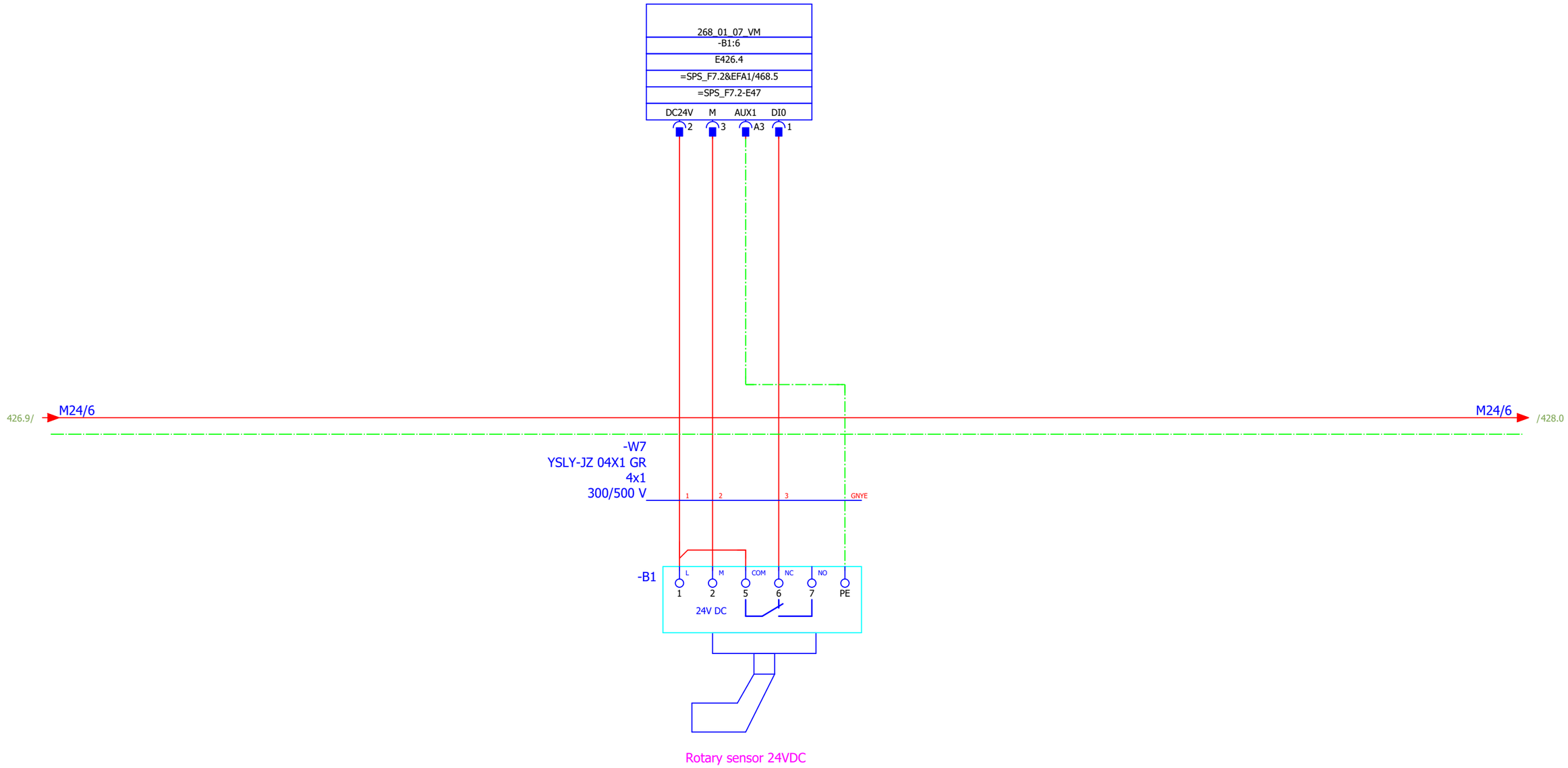

			Date	12.12.2019	Mixed feed plant Golden Poultry	BEYTEC ... your gateway to success	Full Silo 527	= 268.1	
			Ed.	willen				+ F27	
			Appr		field 7 external signals			1 : 1 / Part II	Page 427
Modification	Date	Name	Original	V:\EPLAN\Projekte\Company\Replace\Beytec\2018\Feed Mill Alssad.elk	Replaced by				Page 605

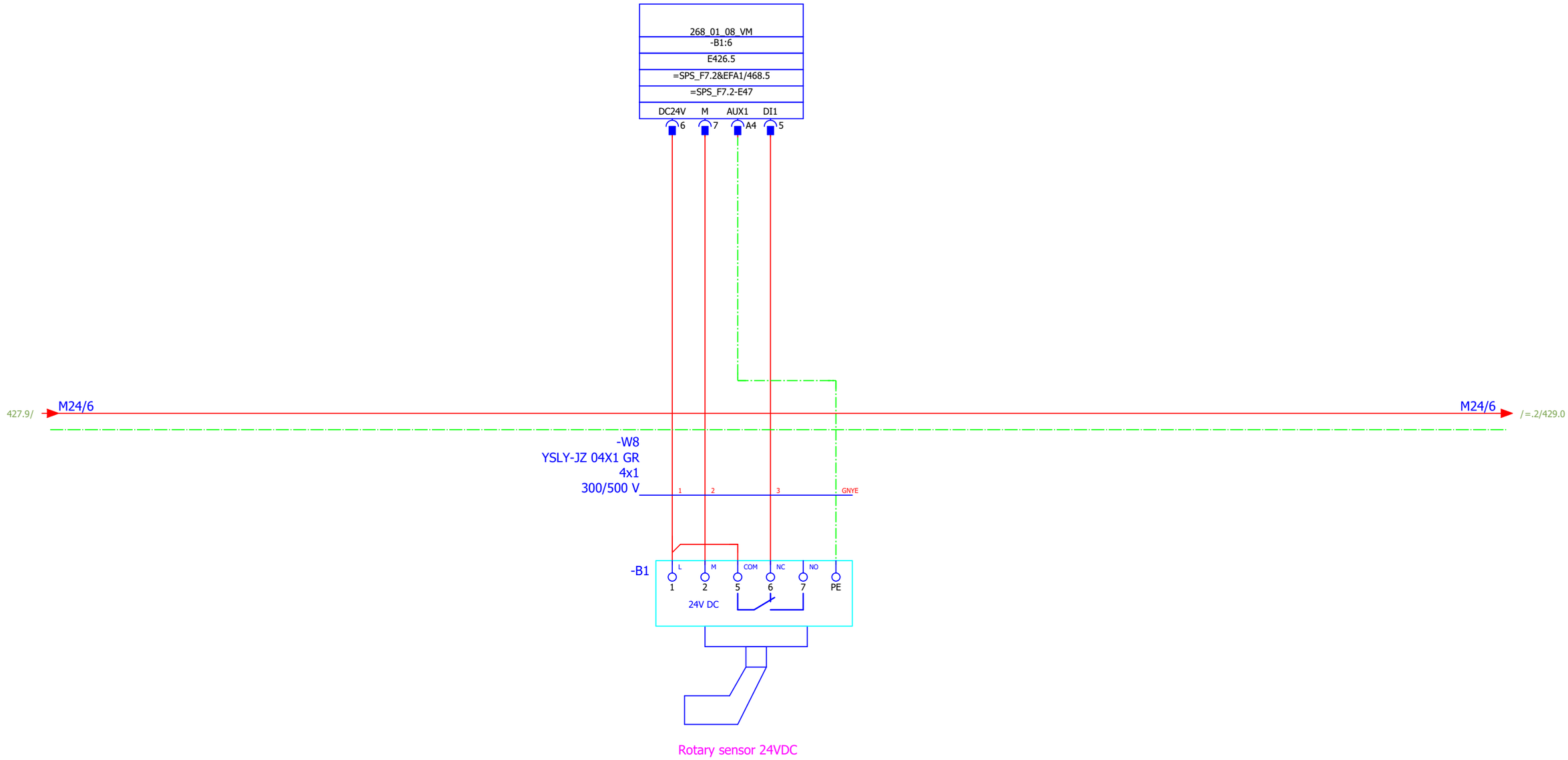

			Date	12.12.2019	Mixed feed plant Golden Poultry	BEYTEC ... your gateway to success	Full Silo 528	= 268.1	
			Ed.	willen				+ F27	
			Appr		field 7 external signals			1 : 1 Part II	Page 428
Modification	Date	Name	Original	V:\EPLAN\Projekte\Company\Replace\Beytec\2018\Feed Mill Alssad.elk	Replaced by				Page 605

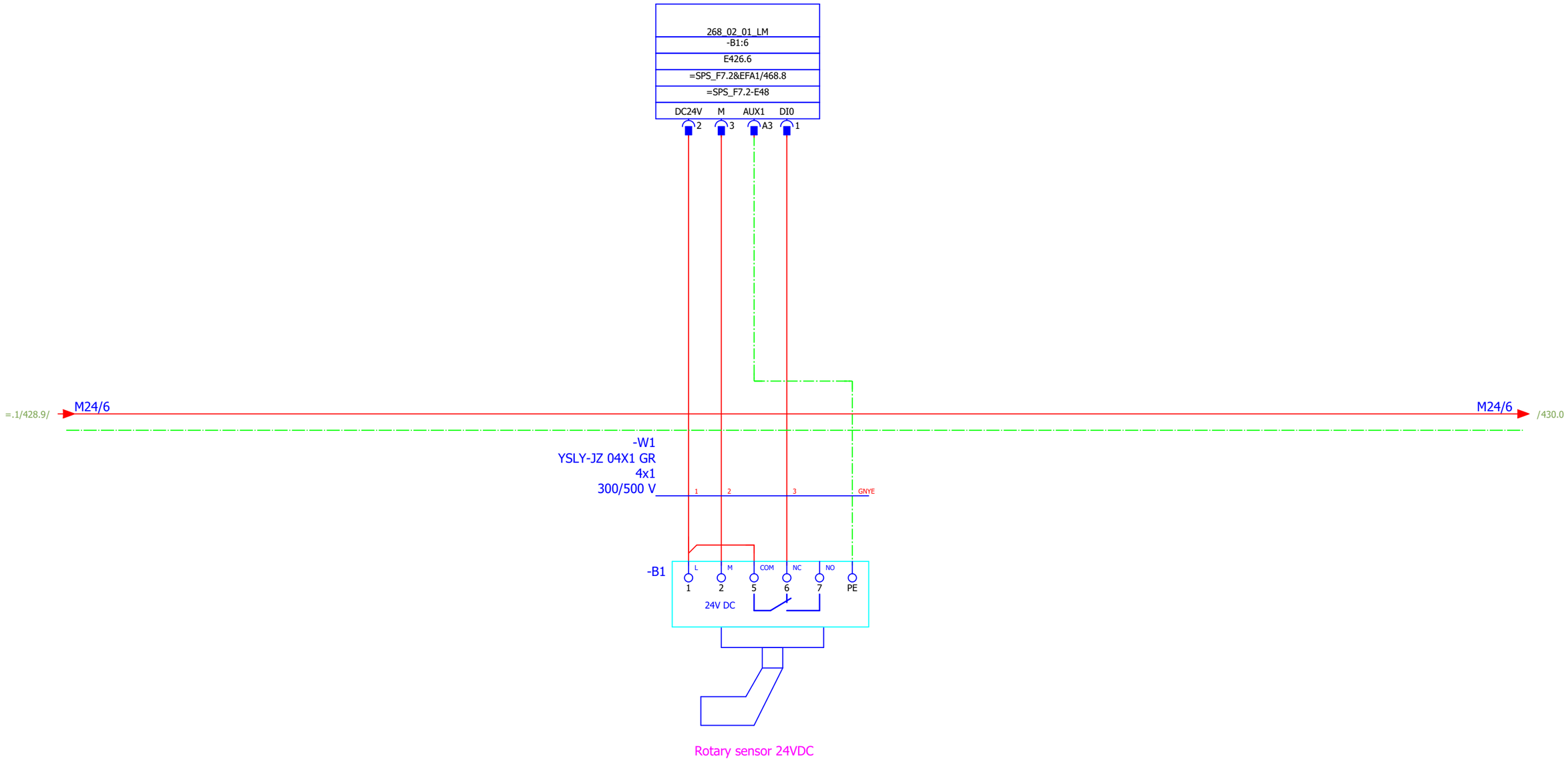

			Date	12.12.2019	Mixed feed plant Golden Poultry	BEYTEC ... your gateway to success	Empty detector silo 521		= 268.2	
			Ed.	willen					+ F27	
			Appr		field 7 external signals			1 : 1	Part II	Page 429
Modification	Date	Name	Original	V:\EPLAN\Projekte\Company\Replace\Beytec\2018\Feed Mill Alssad.elk	Replaced by					Page 605

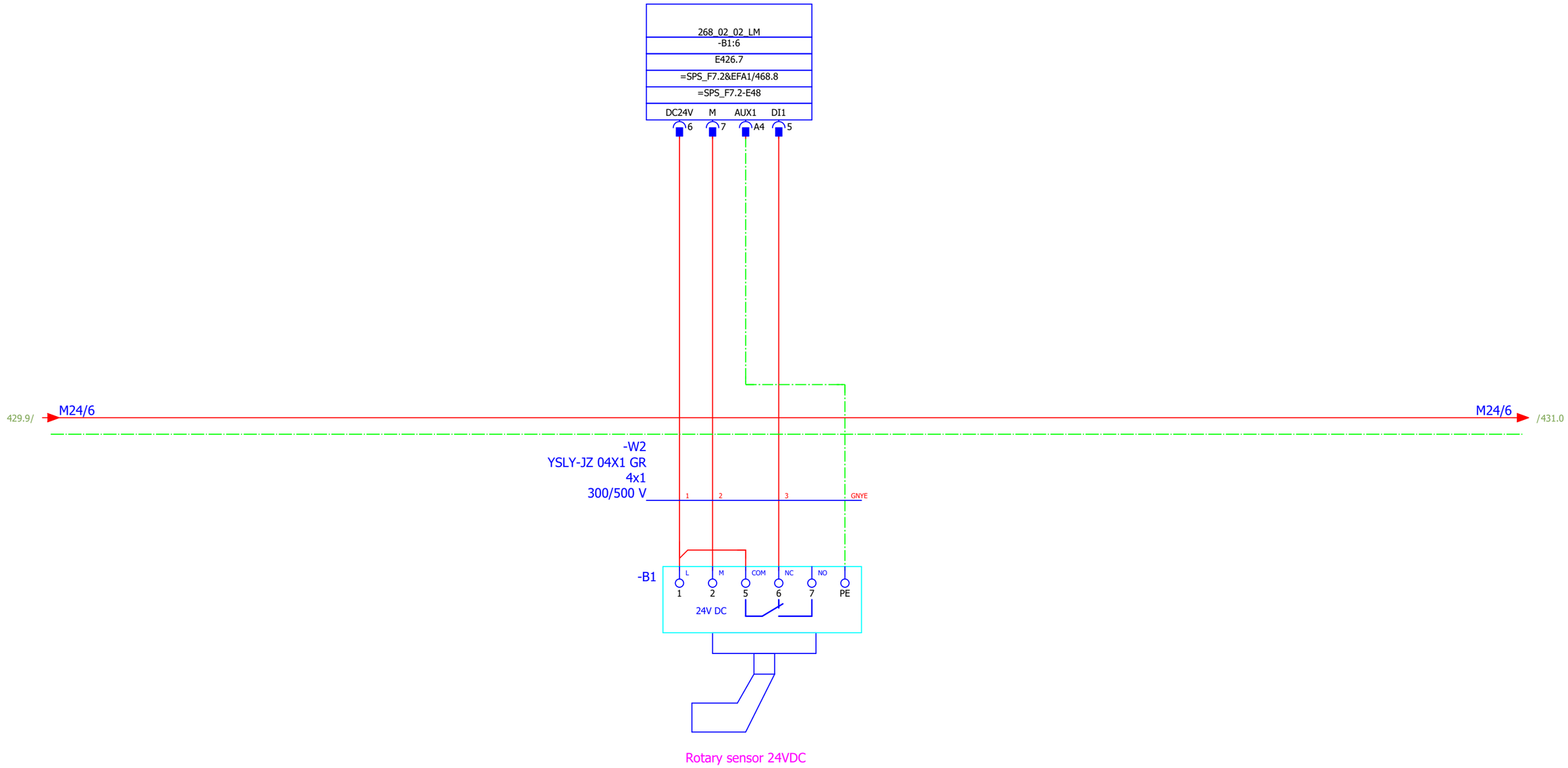

Rotary sensor 24VDC

			Date	12.12.2019	Mixed feed plant Golden Poultry	BEYTEC ... your gateway to success	Empty detector silo 522	= 268.2	
			Ed.	willen				+ F27	
			Appr		field 7 external signals			1 : 1 / Part II	Page 430
Modification	Date	Name	Original	V:\EPLAN\Projekte\Company\Replace\Beytec\2018\Feed Mill Alssad.elk	Replaced by				Page 605

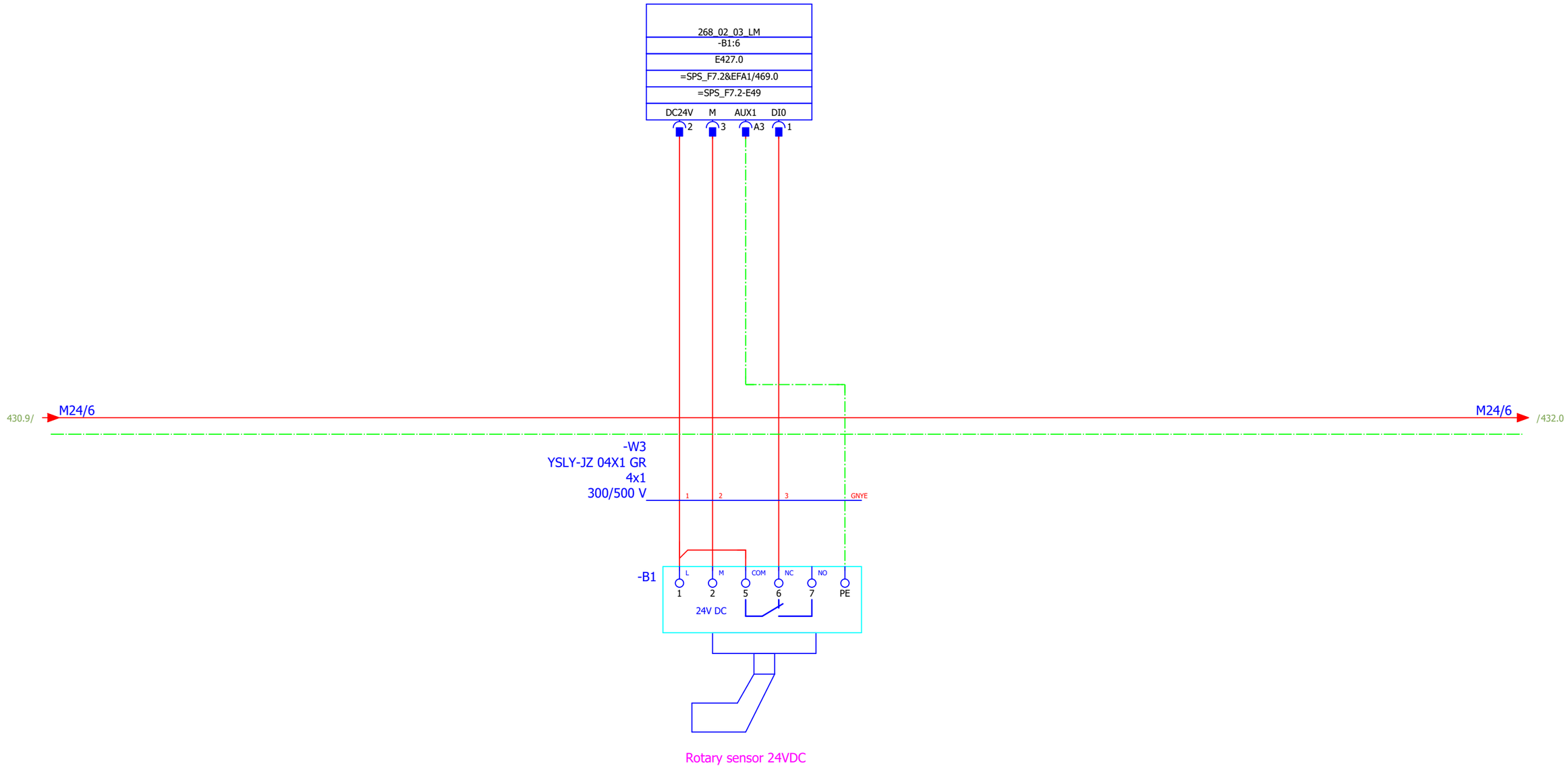

Rotary sensor 24VDC

			Date	12.12.2019	Mixed feed plant Golden Poultry	BEYTEC ... your gateway to success	Empty detector silo 523		= 268.2	
			Ed.	willen					+ F27	
			Appr		field 7 external signals			1 : 1	Part II	Page 431
Modification	Date	Name	Original	V:\EPLAN\Projekte\Company\Replace\Beytec\2018\Feed Mill Alssad.elk	Replaced by					Page 605

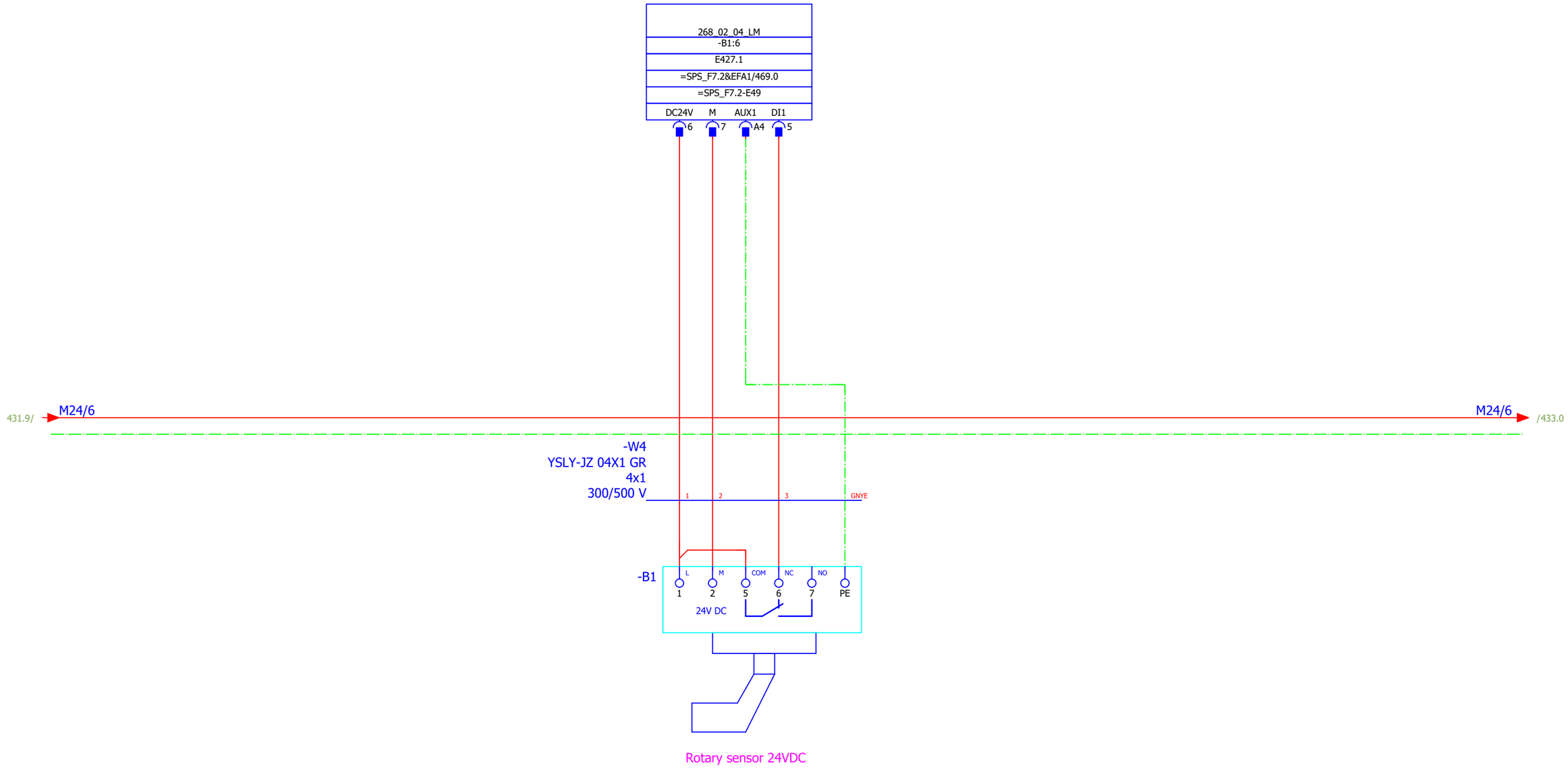

			Date	12.12.2019	Mixed feed plant Golden Poultry	BEYTEC ... your gateway to success	Empty detector silo 524		= 268.2	
			Ed.	willen					+ F27	
			Appr		field 7 external signals			1 : 1	Part II	Page 432
Modification	Date	Name	Original	V:\EPLAN\Projekte\Company\Replace\Beytec\2018\Feed Mill Alssad.elk	Replaced by					Page 605

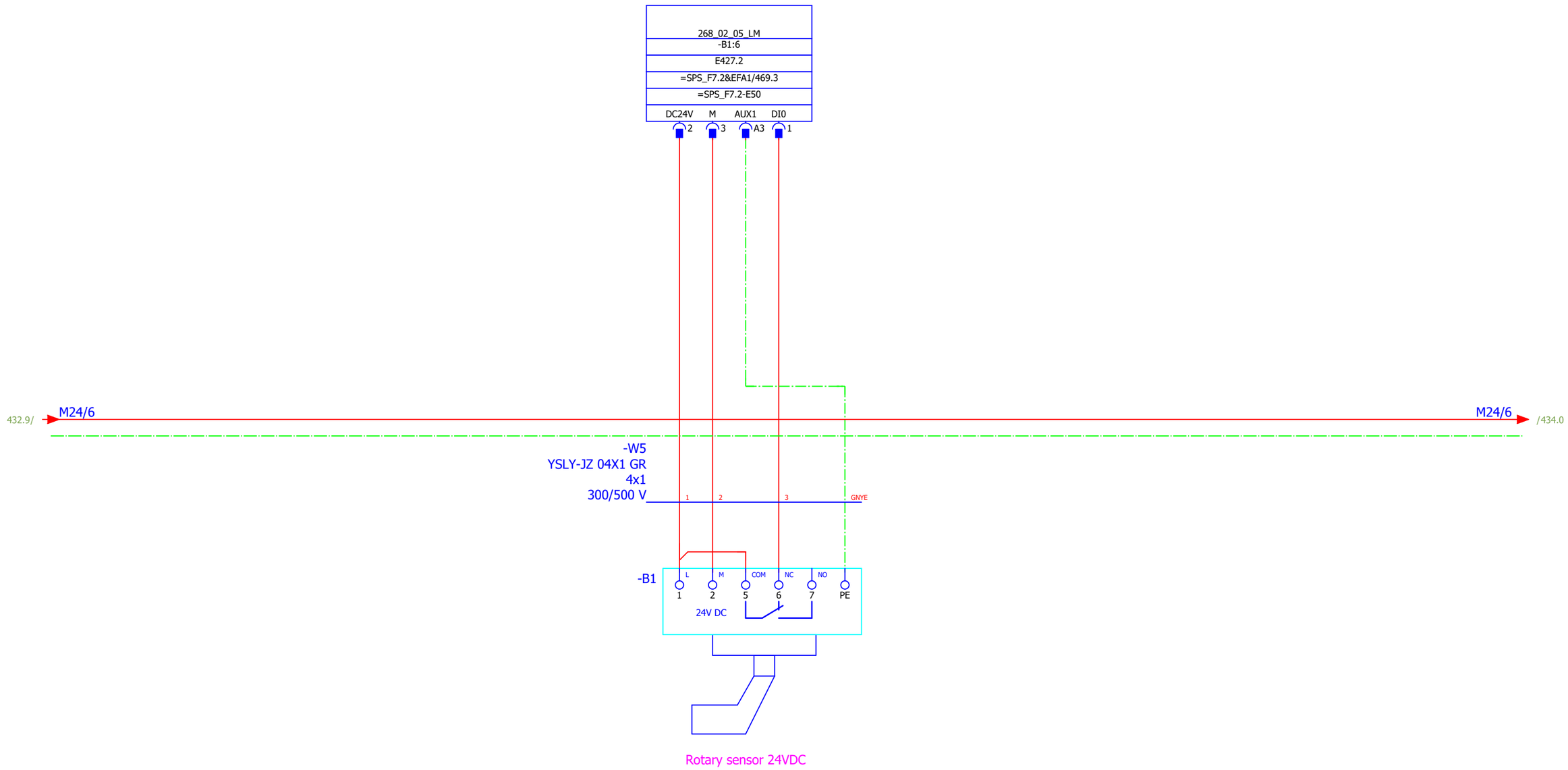

Rotary sensor 24VDC

			Date	12.12.2019	Mixed feed plant Golden Poultry	BEYTEC ... your gateway to success	Empty detector silo 525	= 268.2	
			Ed.	willen				+ F27	
			Appr		field 7 external signals			1 : 1 / Part II	Page 433
Modification	Date	Name	Original	V:\EPLAN\Projekte\Company\Replace\Beytec\2018\Feed Mill Alssad.elk	Replaced by				Page 605

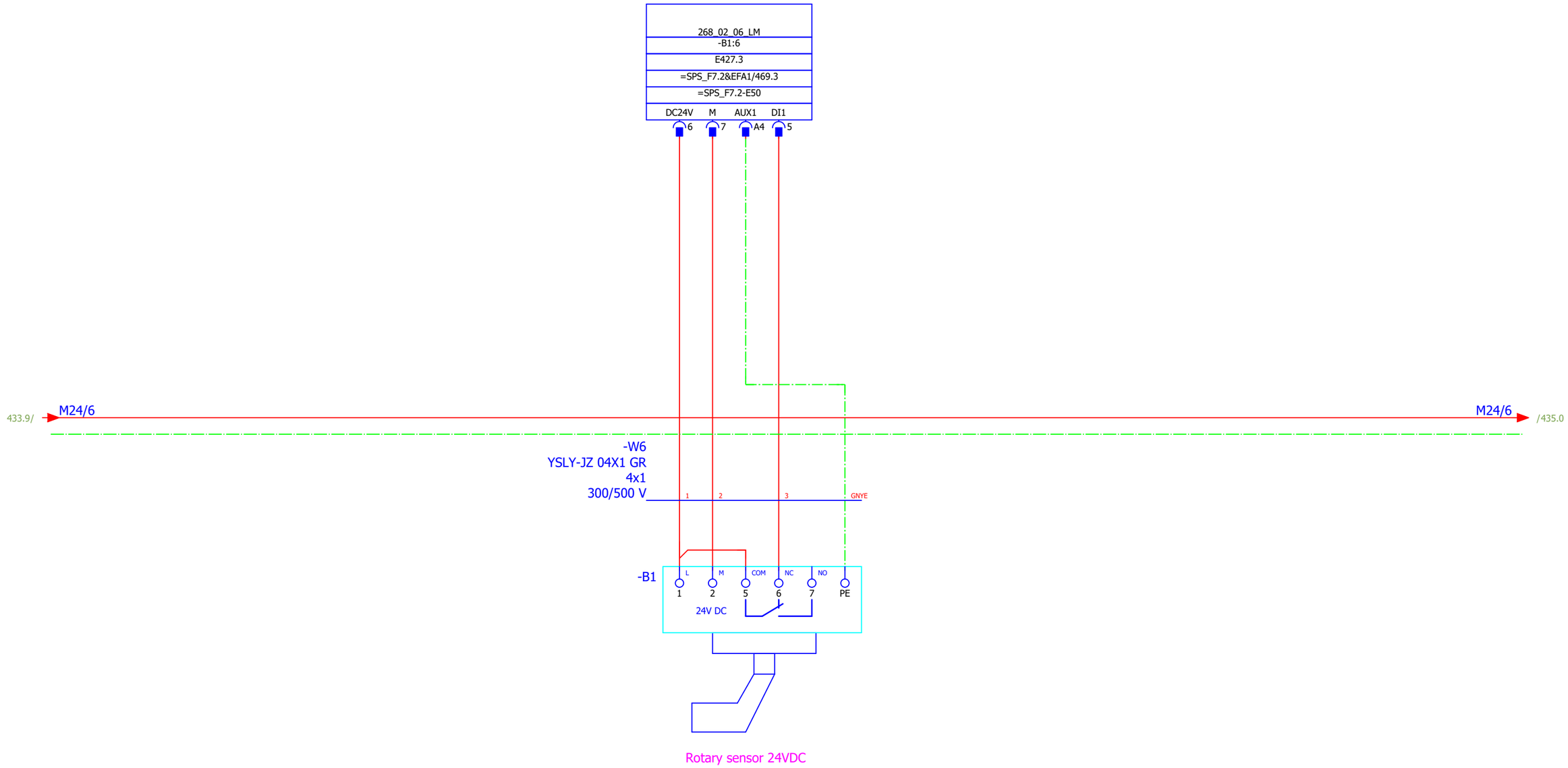

Rotary sensor 24VDC

			Date	12.12.2019	Mixed feed plant Golden Poultry	BEYTEC ... your gateway to success	Empty detector silo 526	= 268.2	
			Ed.	willen				+ F27	
			Appr		field 7 external signals			1 : 1 / Part II	Page 434
Modification	Date	Name	Original	V:\EPLAN\Projekte\Company\Replace\Beytec\2018\Feed Mill Alssad.elk	Replaced by				Page 605

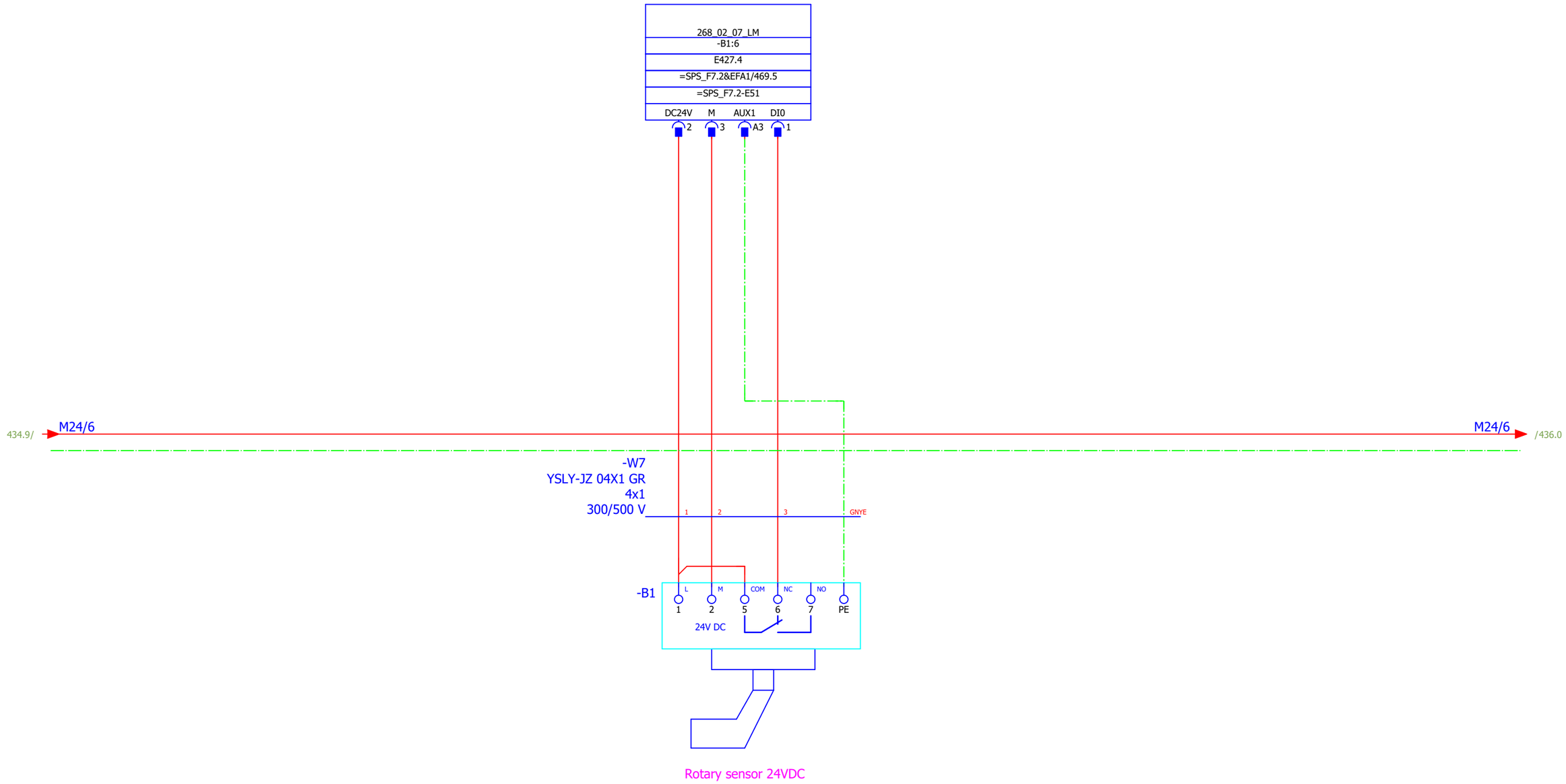

Rotary sensor 24VDC

			Date	12.12.2019	Mixed feed plant Golden Poultry	BEYTEC ... your gateway to success	Empty detector silo 527	= 268.2	
			Ed.	willen				+ F27	
			Appr		field 7 external signals			1 : 1 / Part II	Page 435
Modification	Date	Name	Original	V:\EPLAN\Projekte\Company\Replace\Beytec\2018\Feed Mill Alssad.elk	Replaced by				Page 605

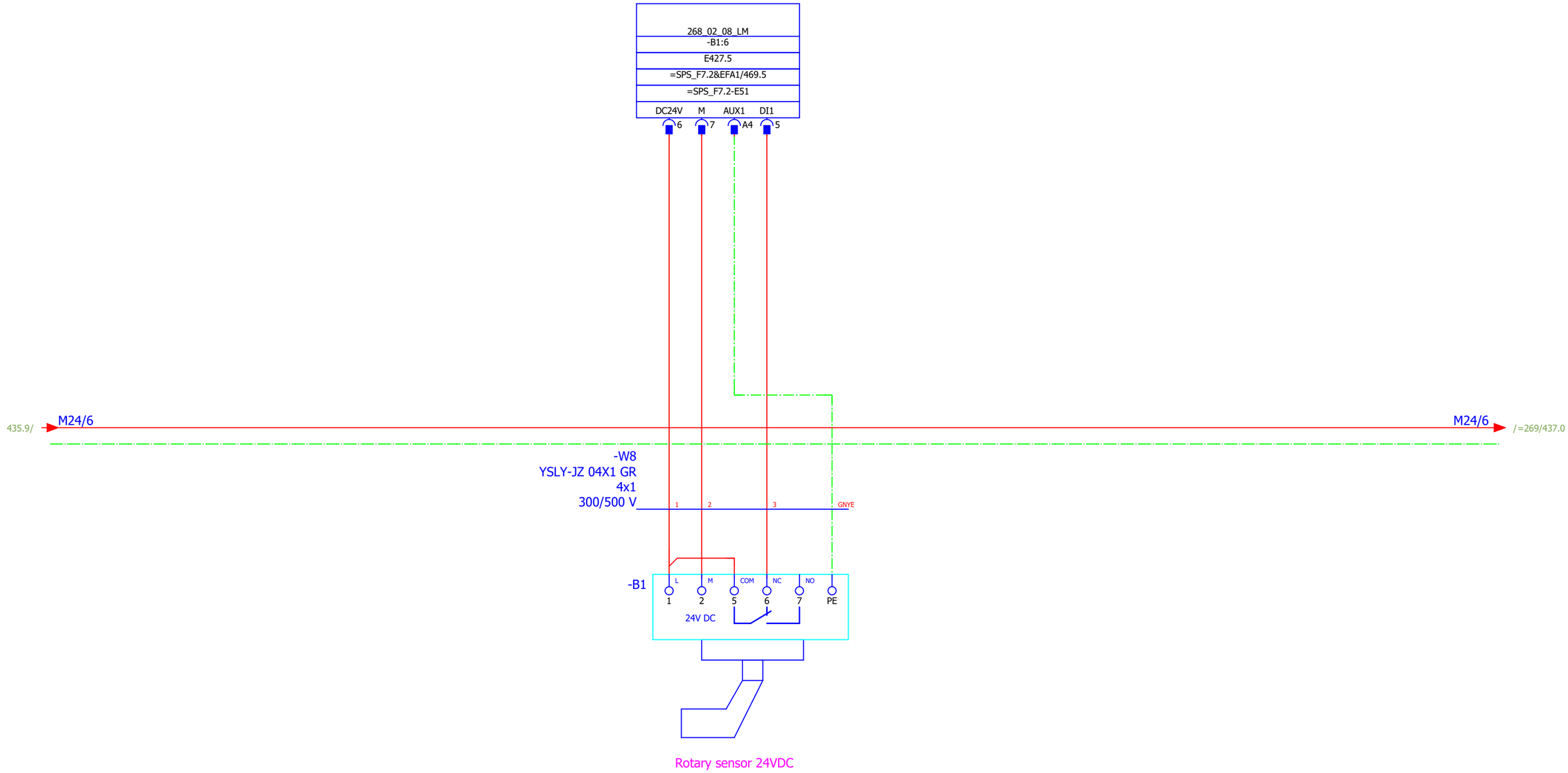

435

=269+F26/239

			Date	12.12.2019	Mixed feed plant Golden Poultry	BEYTEC ... your gateway to success	Empty detector silo 528	= 268.2	
			Ed.	willen				+ F27	
			Appr		field 7 external signals			1 : 1 / Part II	Page 436
Modification	Date	Name	Original	V:\EPLAN\Projekte\Company\Replace\Beytec\2018\Feed Mill Alssad.elk	Replaced by				Page 605

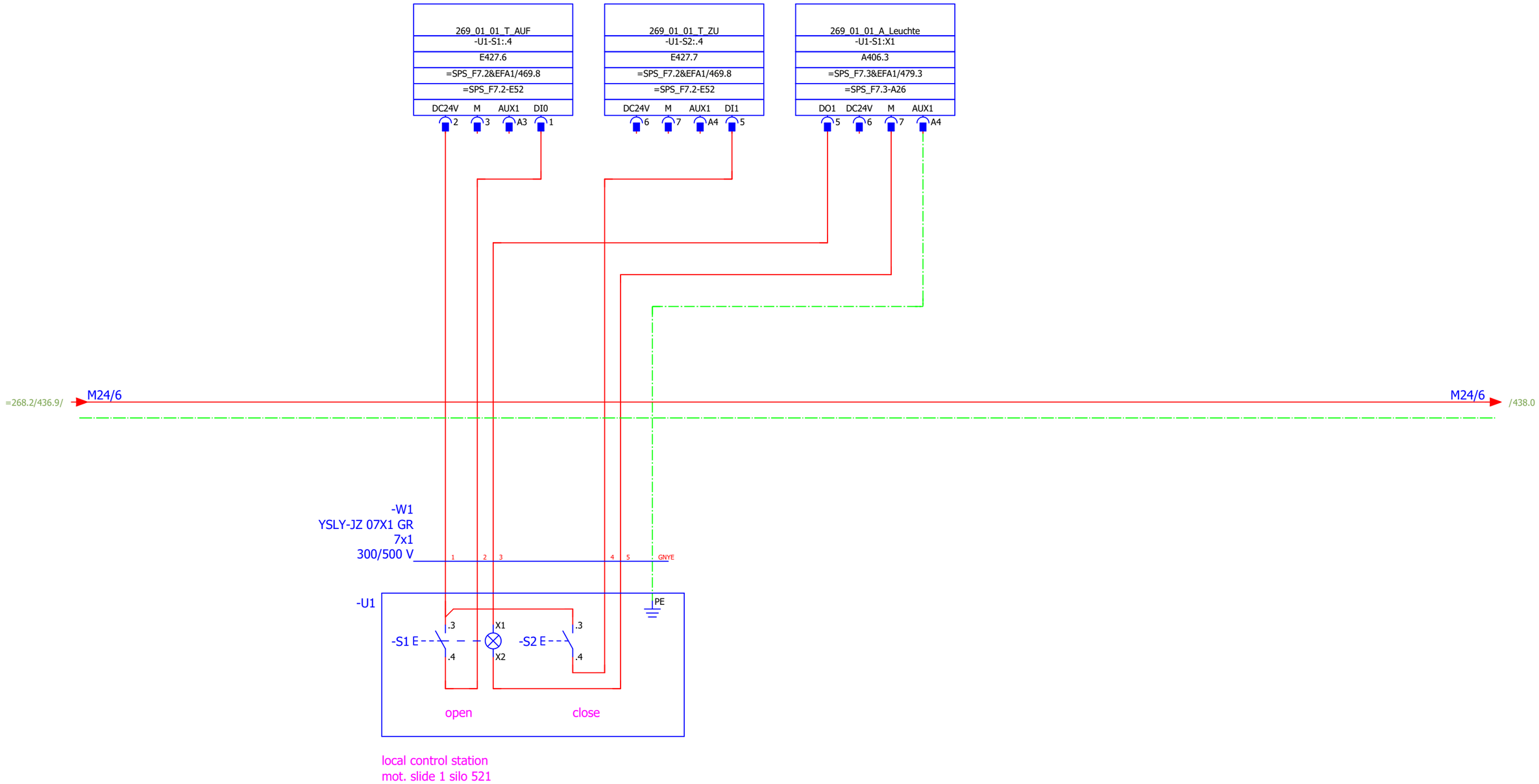

			Date	12.12.2019	Mixed feed plant Golden Poultry	BEYTEC ... your gateway to success	mot. slide 1 silo 521		= 269	
			Ed.	willen					+ F27	
			Appr		field 7 external signals			1 : 1	Part II	Page 437
Modification	Date	Name	Original	V:\EPLAN\Projekte\Company\Replace\Beytec\2018\Feed Mill Alssad.elk	Replaced by					Page 605

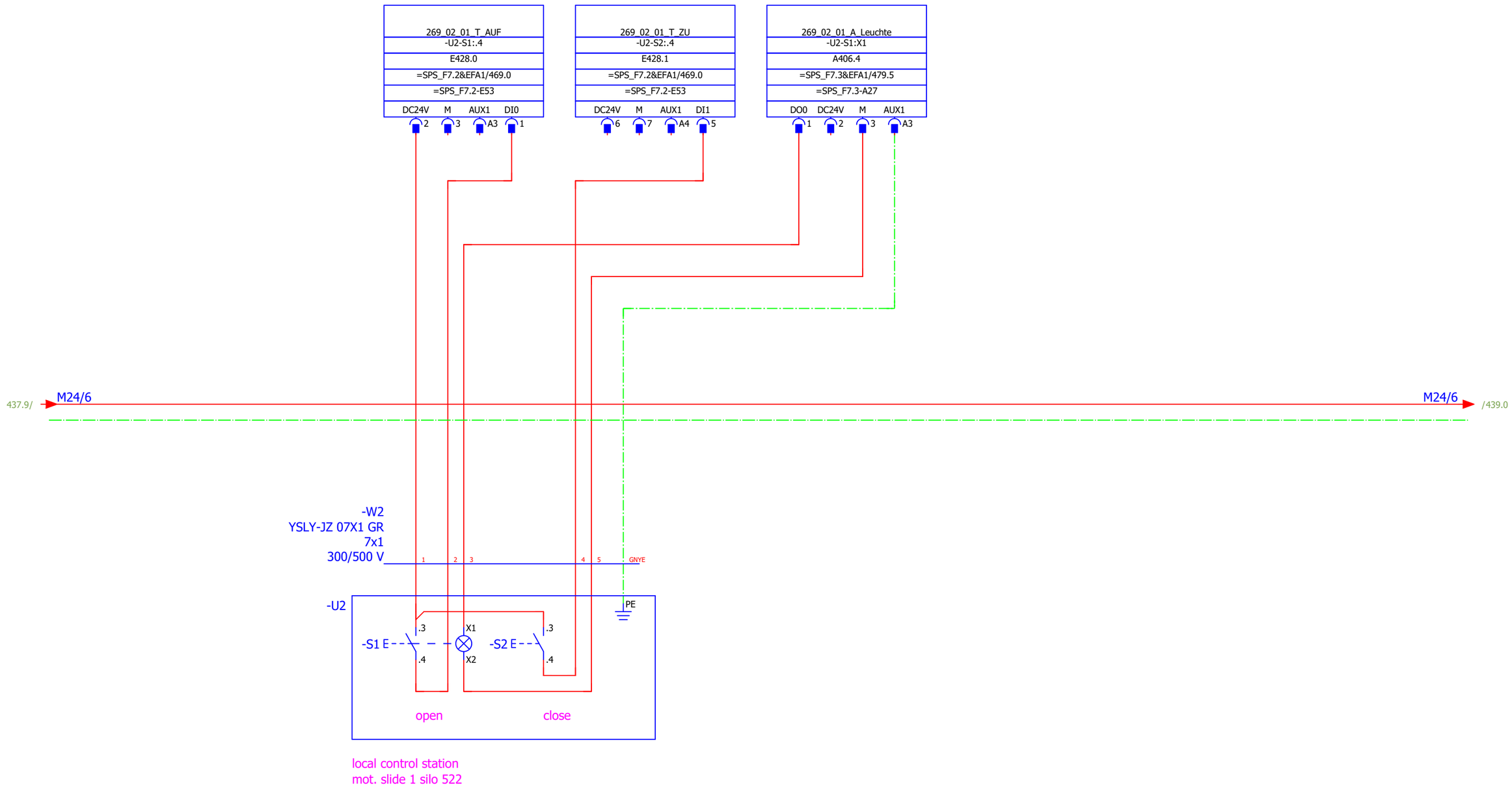

			Date	12.12.2019	Mixed feed plant Golden Poultry	BEYTEC ... your gateway to success	mot. slide 1 silo 522	= 269	
			Ed.	willen				+ F27	
			Appr		field 7 external signals			1 : 1 Part II	Page 438
Modification	Date	Name	Original	V:\EPLAN\Projekte\Company\Replace\Beytec\2018\Feed Mill Alssad.elk	Replaced by				Page 605

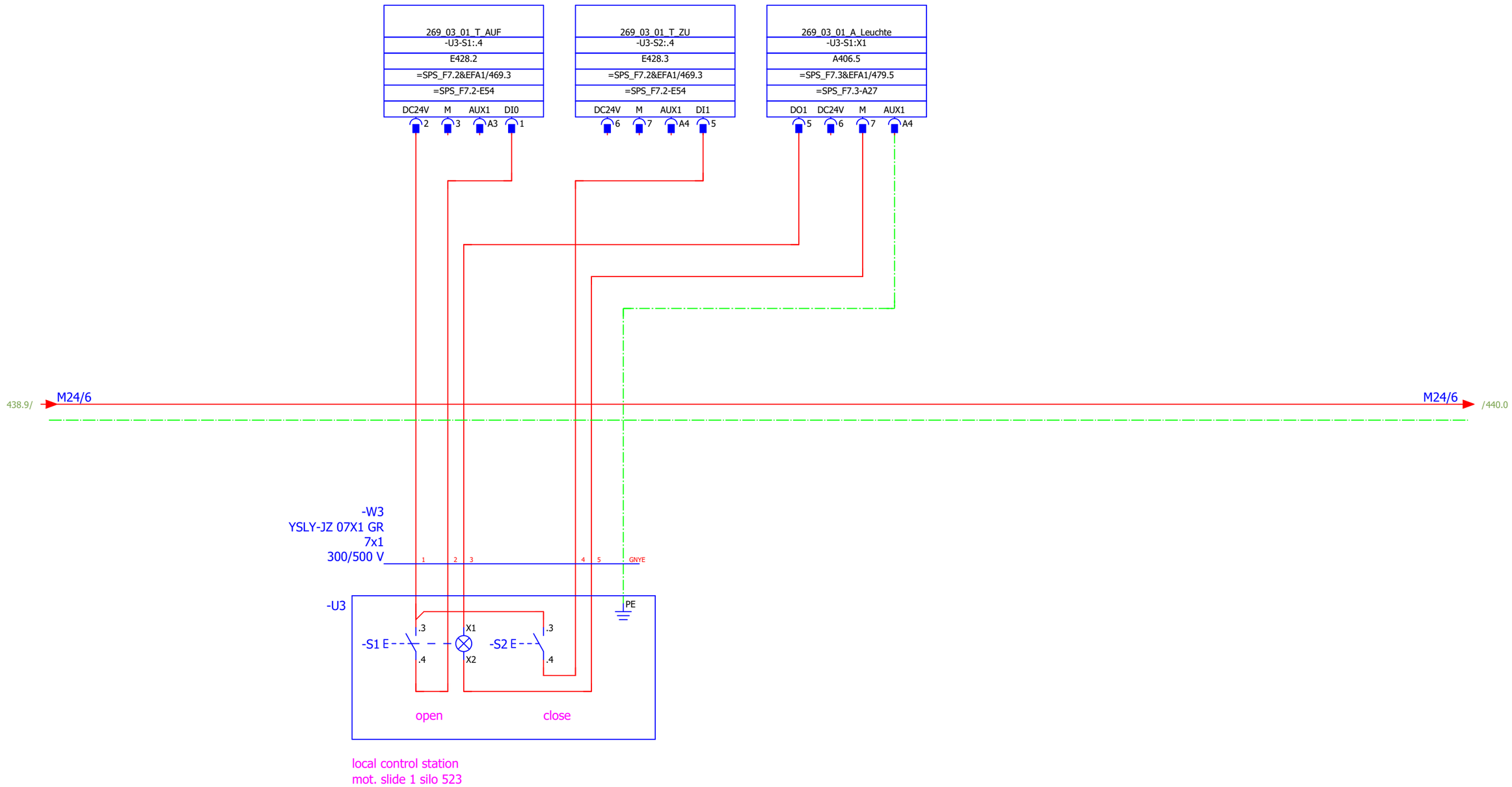

			Date	12.12.2019	Mixed feed plant Golden Poultry	BEYTEC ... your gateway to success	mot. slide 1 silo 523	= 269	
			Ed.	willen				+ F27	
			Appr		field 7 external signals		1 : 1	Part II	Page 439
Modification	Date	Name	Original	V:\EPLAN\Projekte\Company\Replace\Beytec\2018\Feed Mill Alssad.elk	Replaced by				Page 605

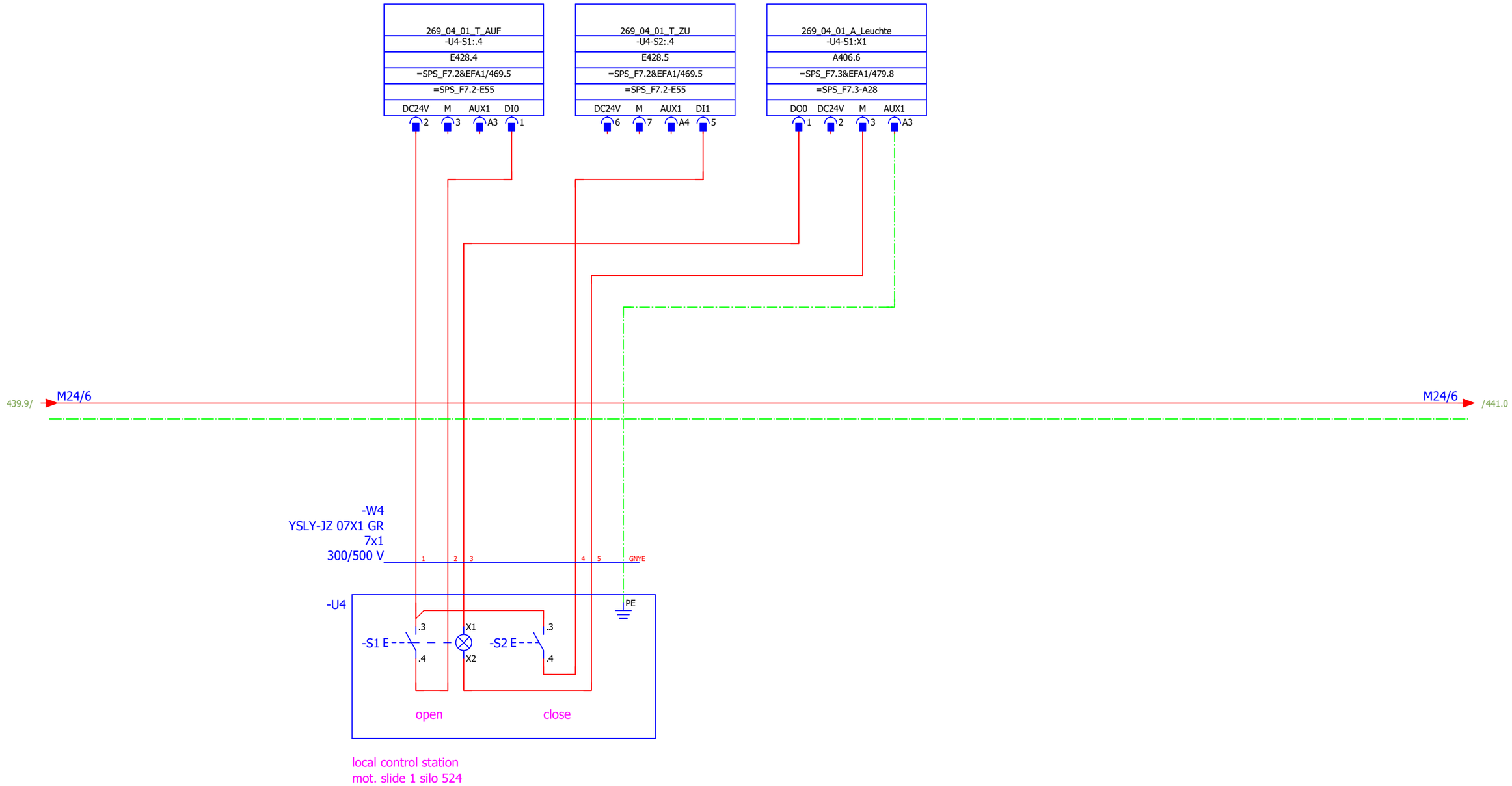

			Date	12.12.2019	Mixed feed plant Golden Poultry	BEYTEC ... your gateway to success	mot. slide 1 silo 524	= 269	
			Ed.	willen				+ F27	
			Appr		field 7 external signals			1 : 1 / Part II	Page 440
Modification	Date	Name	Original	V:\EPLAN\Projekte\Company\Replace\Beytec\2018\Feed Mill Alssad.elk	Replaced by				Page 605

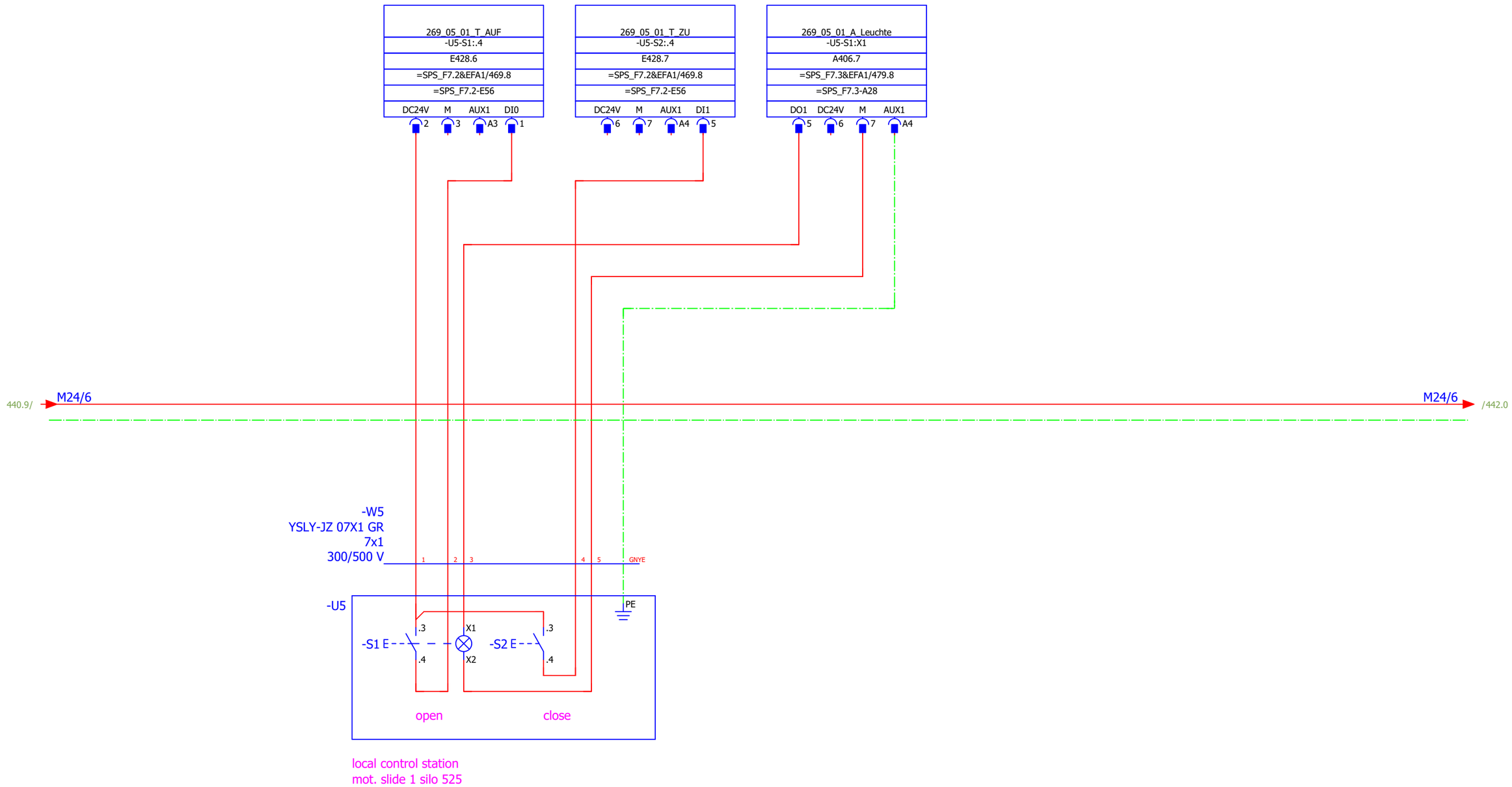

			Date	12.12.2019	Mixed feed plant Golden Poultry	BEYTEC ... your gateway to success	mot. slide 1 silo 525	= 269	
			Ed.	willen				+ F27	
			Appr		field 7 external signals		1 : 1	Part II	Page 441
Modification	Date	Name	Original	V:\EPLAN\Projekte\Company\Replace\Beytec\2018\Feed Mill Alssad.elk	Replaced by				Page 605

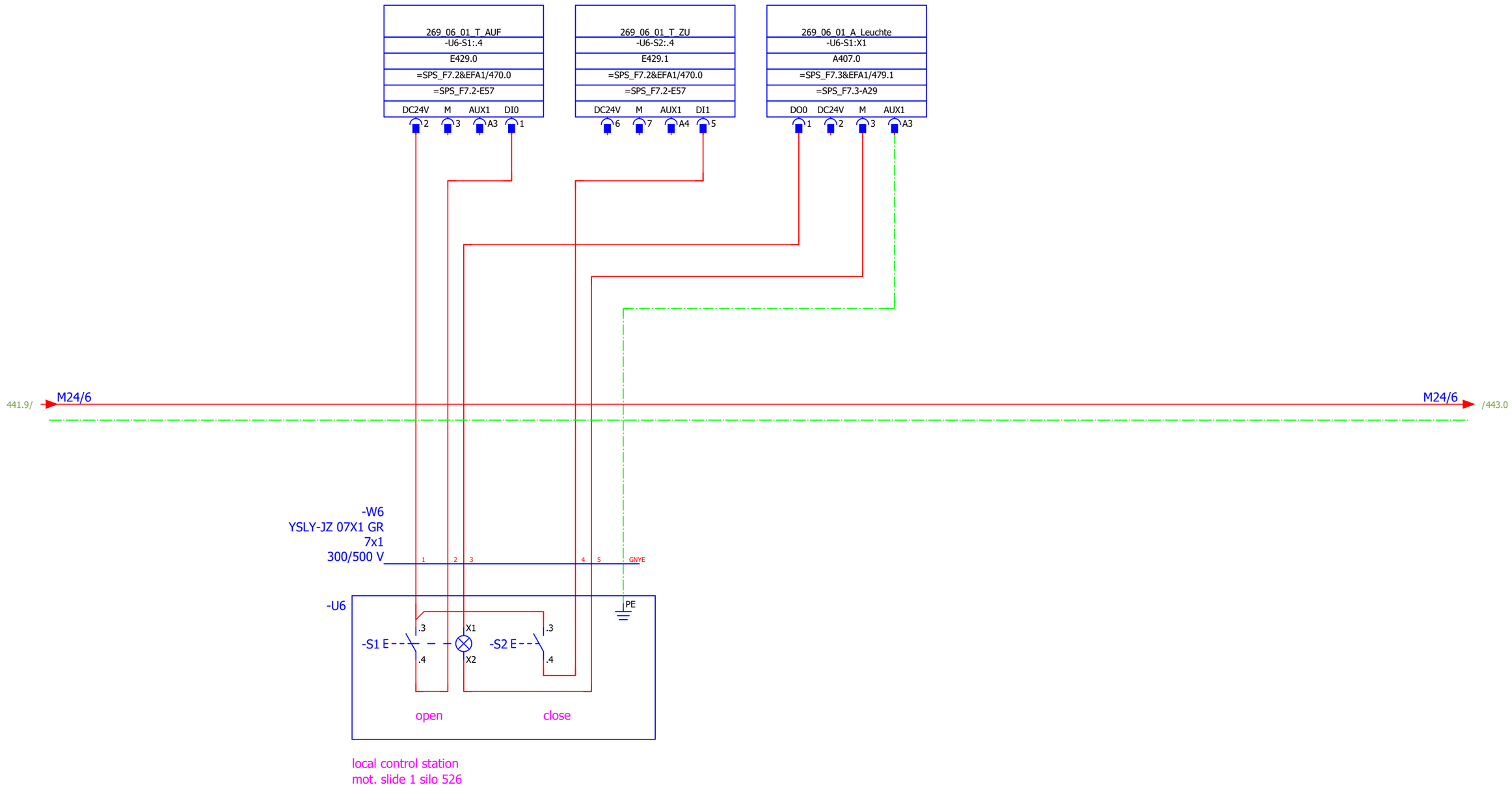

			Date	12.12.2019	Mixed feed plant Golden Poultry	BEYTEC ... your gateway to success	mot. slide 1 silo 526	= 269	
			Ed.	willen				+ F27	
			Appr		field 7 external signals			1 : 1 Part II	Page 442
Modification	Date	Name	Original	V:\EPLAN\Projekte\Company\Replace\Beytec\2018\Feed Mill Alssad.elk	Replaced by				Page 605

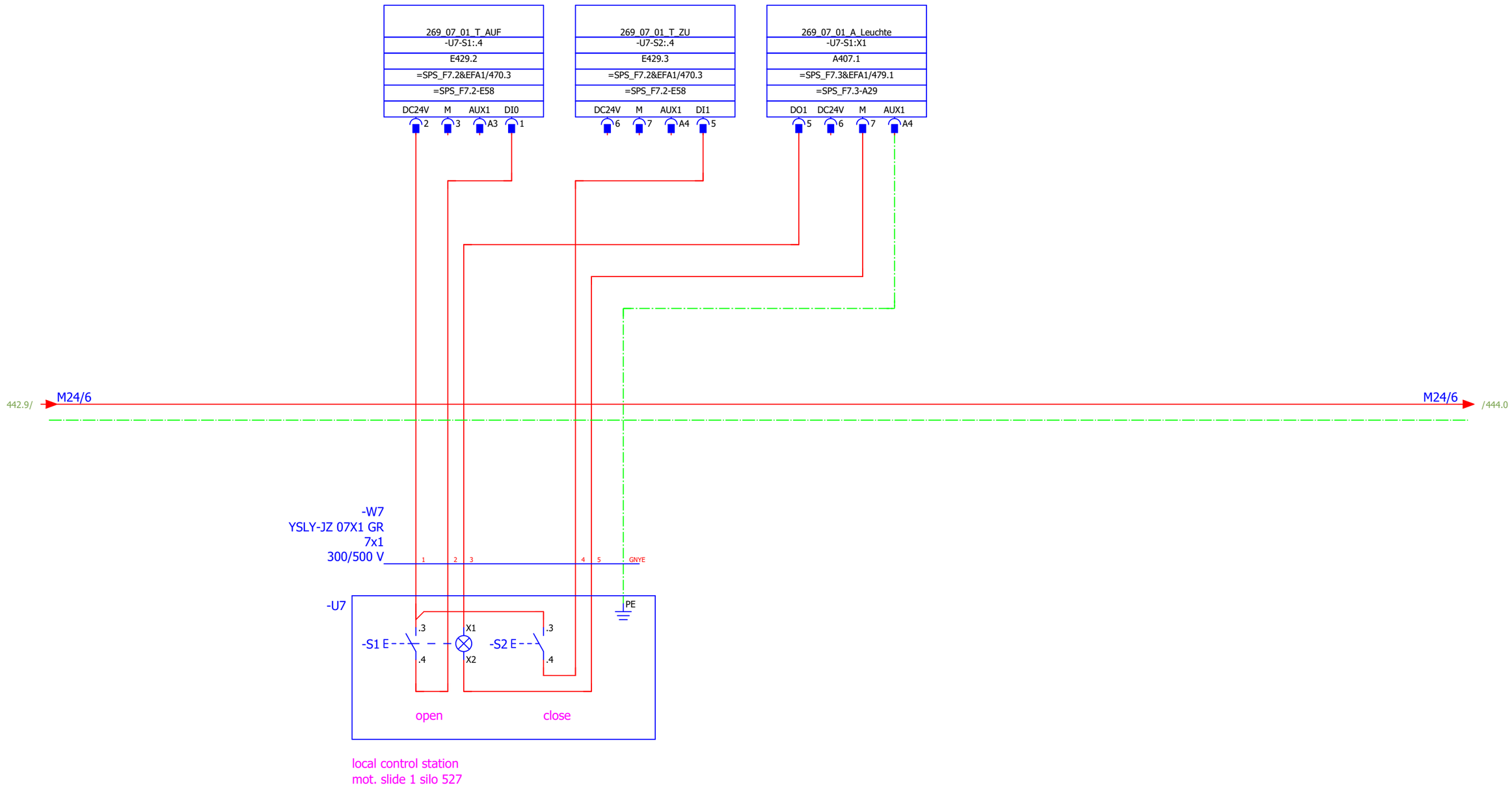

			Date	12.12.2019	Mixed feed plant Golden Poultry	BEYTEC ... your gateway to success	mot. slide 1 silo 527	= 269	
			Ed.	willen				+ F27	
			Appr		field 7 external signals			1 : 1 Part II	Page 443
Modification	Date	Name	Original	V:\EPLAN\Projekte\Company\Replace\Beytec\2018\Feed Mill Alssad.elk	Replaced by				Page 605

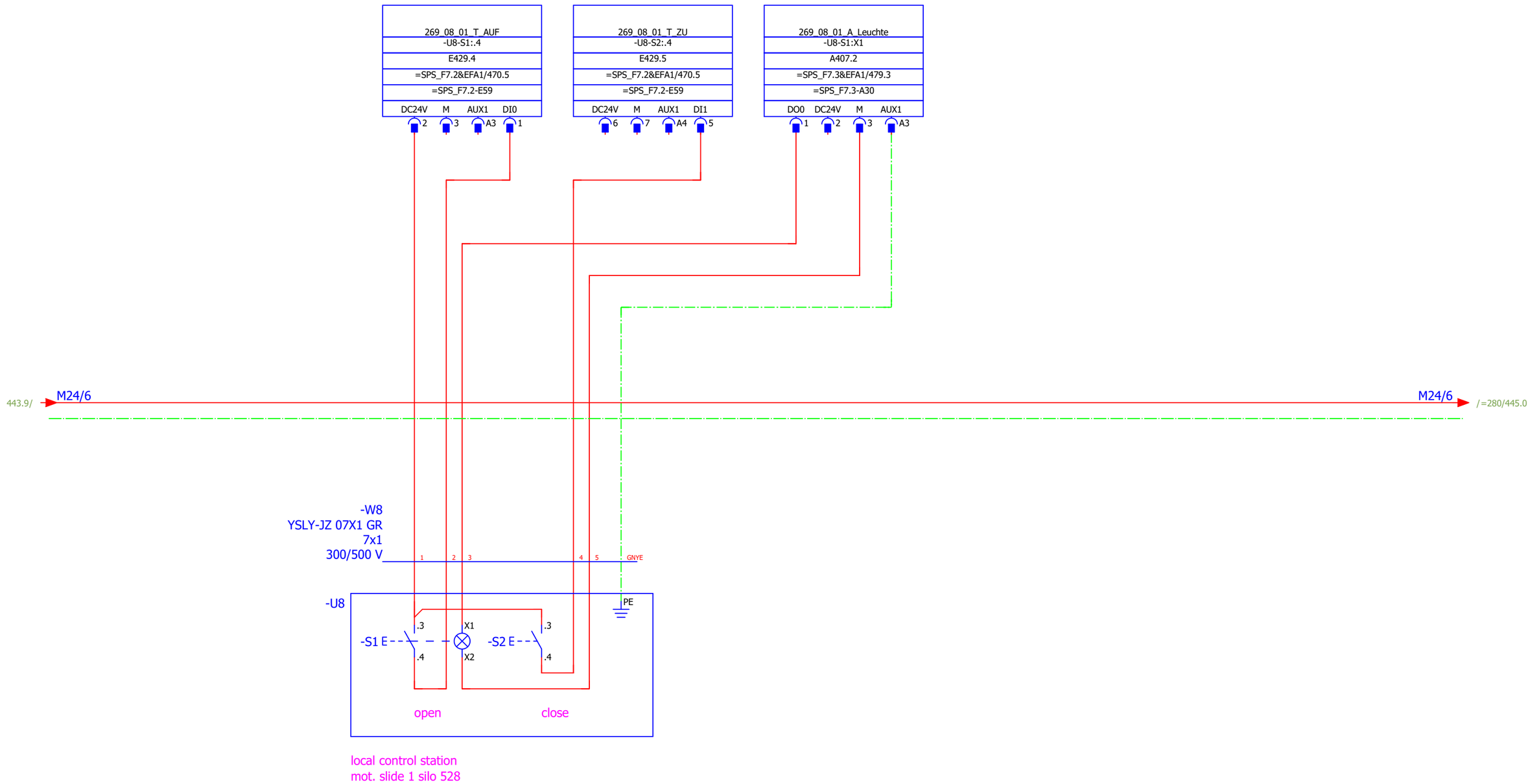

443

=280+F26/256

			Date	12.12.2019	Mixed feed plant Golden Poultry	BEYTEC ... your gateway to success	mot. slide 1 silo 528	= 269	
			Ed.	willen				+ F27	
			Appr		field 7 external signals			1 : 1 / Part II	Page 444
Modification	Date	Name	Original	V:\EPLAN\Projekte\Company\Replace\Beytec\2018\Feed Mill Alssad.elk	Replaced by				Page 605

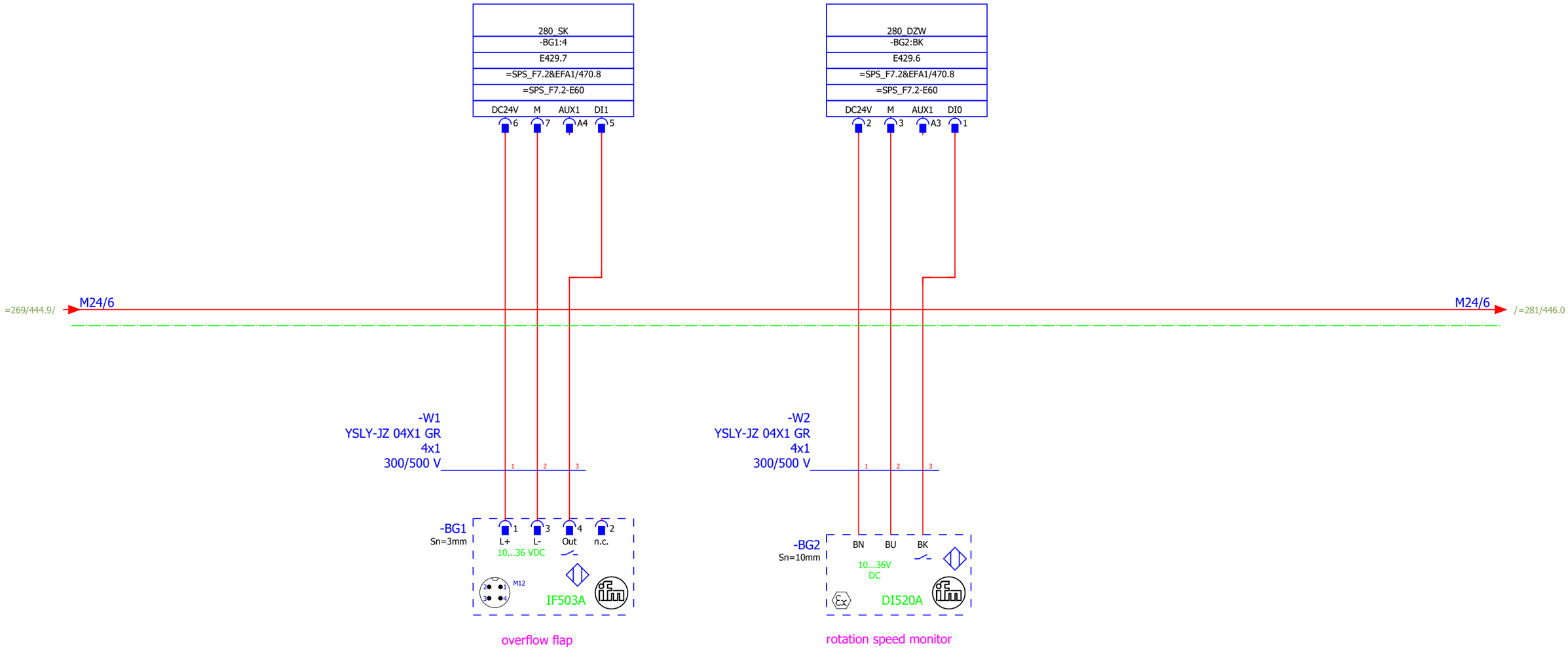

+F26/257

=281+F26/258

			Date	12.12.2019	Mixed feed plant Golden Poultry	BEYTEC ... your gateway to success	overflow flap & rotation speed monitor	= 280	
			Ed.	willen				+ F27	
			Appr		field 7 external signals		1 : 1	Part II	Page 445
Modification	Date	Name	Original	V:\EPLAN\Projekte\Company\Replace\Beytec\2018\Feed Mill Alssad.elk	Replaced by				Page 605

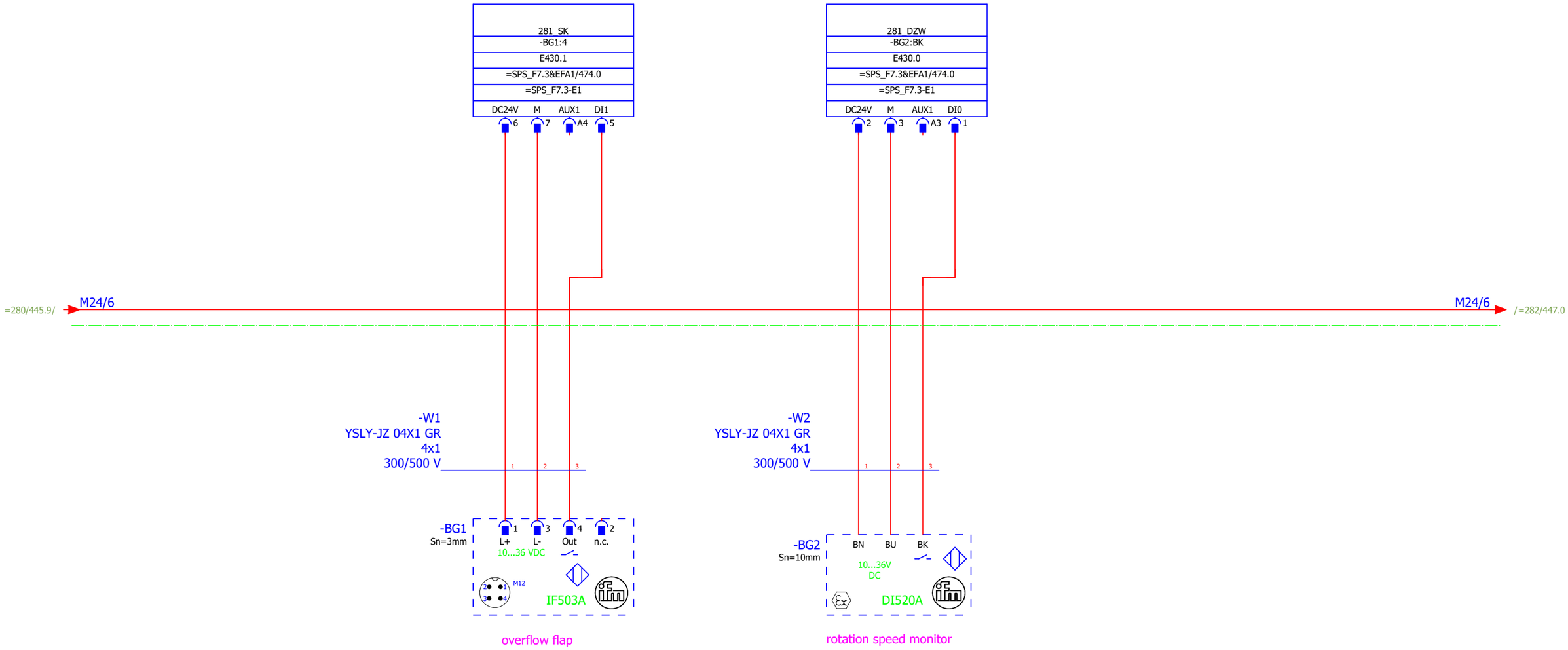

+F26/258

=282+F26/259

			Date	12.12.2019	Mixed feed plant Golden Poultry	BEYTEC ... your gateway to success	overflow flap & rotation speed monitor	= 281	
			Ed.	willen				+ F27	
			Appr		field 7 external signals		1 : 1	Part II	Page 446
Modification	Date	Name	Original	V:\EPLAN\Projekte\Company\Replace\Beytec\2018\Feed Mill Alssad.elk	Replaced by				Page 605

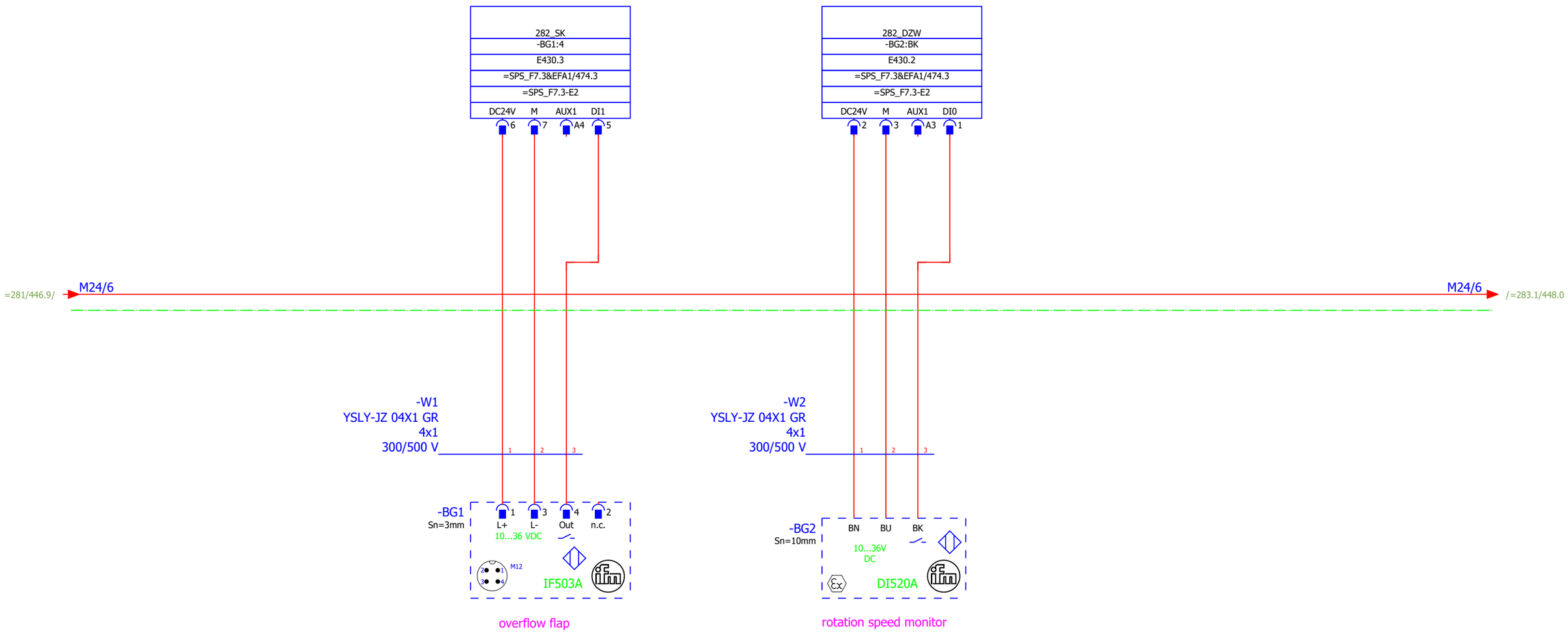
282_SK
-BG1:4
E430.3
=SPS_F7.3&EFA1/474.3
=SPS_F7.3-E2
DC24V M AUX1 DI1
6 7 A4 5
282_DZW
-BG2:BK
E430.2
=SPS_F7.3&EFA1/474.3
=SPS_F7.3-E2
DC24V M AUX1 DI0
2 3 A3 1
=281/446.9/
M24/6
M24/6
/=283.1/448.0
-W1
YSLY-JZ 04X1 GR
4x1
300/500 V
-W2
YSLY-JZ 04X1 GR
4x1
300/500 V
-BG1
Sn=3mm
L+ L- Out n.c.
10...36 VDC
M12
IF503A
overflow flap
-BG2
Sn=10mm
BN BU BK
10...36V
DC
DI520A
rotation speed monitor

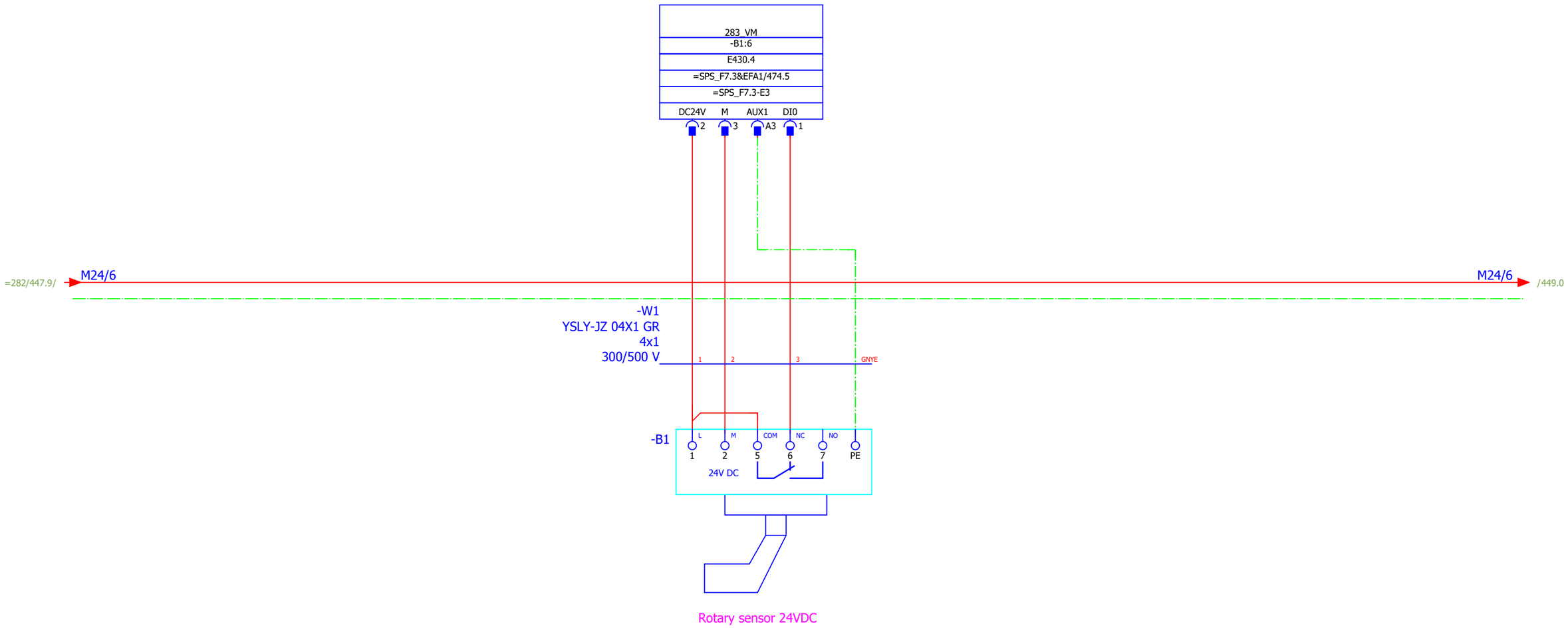
283_VM
-B1:6
E430.4
=SPS_F7.3&EFA1/474.5
=SPS_F7.3-E3
DC24V
M
AUX1
DI0
2
3
A3
1
=282/447.9/
M24/6
M24/6
/449.0
-W1
YSLY-JZ 04X1 GR
4x1
300/500 V
1
2
3
GNYE
-B1
L
M
COM
NC
NO
1
2
5
6
7
PE
24V DC
Rotary sensor 24VDC

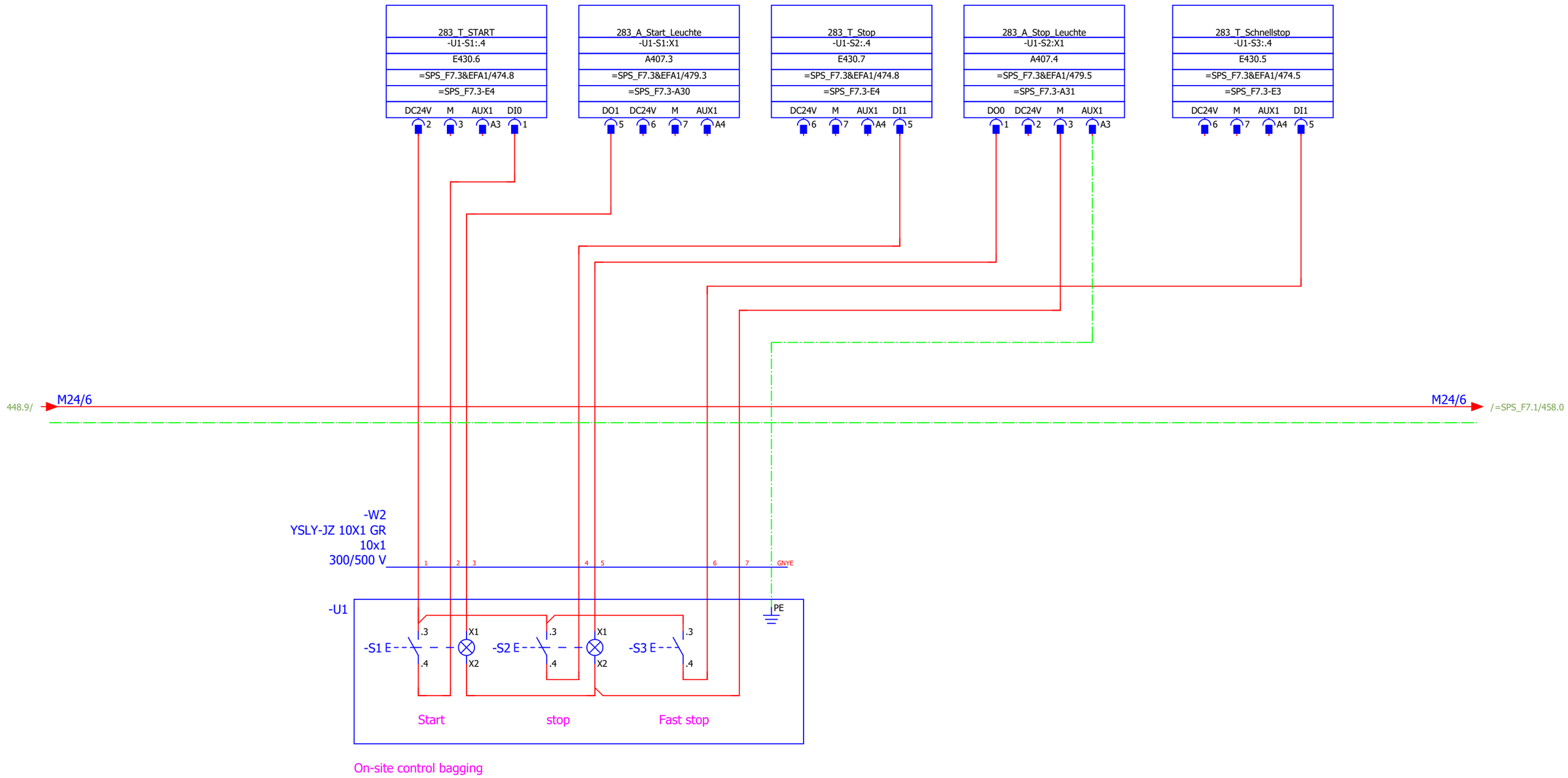

On-site control bagging

448

=SPS_F5+F25&EFA1/206

			Date	12.12.2019	Mixed feed plant Golden Poultry	BEYTEC ... your gateway to success	Bagging	= 283.1	
			Ed.	willen				+ F27	
			Appr		field 7 external signals			1 : 1 / Part II	Page 449
Modification	Date	Name	Original	V:\EPLAN\Projekte\Company\Replace\Beytec\2018\Feed Mill Alssad.elk	Replaced by				Page 605

-E1
&ETC/462.2

ET200S SIEMENS
2 DI DC 24 V ST

E400.0	1 DI0	=8.1&EFS/288.4&8.1-B1:6	008_01_04_VM
	2 DC24V	=8.1&EFS/288.4	
	3 M	=8.1&EFS/288.4	
	A4 AUX1	=8.1&EFS/289.4	Rotary sensor 24VDC
E400.1	5 DI1	=8.1&EFS/289.4&8.1-B1:6	008_01_05_VM
	6 DC24V	=8.1&EFS/289.4	
	7 M	=8.1&EFS/289.4	
	A3 AUX1	=8.1&EFS/288.4	Rotary sensor 24VDC

6ES7131-4BB01-0AA0
+ TM-E15C24-A1

-E2
&ETC/462.2

ET200S SIEMENS
2 DI DC 24 V ST

E400.2	1 DI0	=8.1&EFS/290.4&8.1-B1:6	008_01_06_VM
	2 DC24V	=8.1&EFS/290.4	
	3 M	=8.1&EFS/290.4	
	A4 AUX1	=8.1&EFS/291.4	Rotary sensor 24VDC
E400.3	5 DI1	=8.1&EFS/291.4&8.1-B1:6	008_01_07_VM
	6 DC24V	=8.1&EFS/291.4	
	7 M	=8.1&EFS/291.4	
	A3 AUX1	=8.1&EFS/290.4	Rotary sensor 24VDC

6ES7131-4BB01-0AA0
+ TM-E15C24-A1

-E3
&ETC/462.2

ET200S SIEMENS
2 DI DC 24 V ST

E400.4	1 DI0	=8.1&EFS/292.4&8.1-B1:6	008_01_08_VM
	2 DC24V	=8.1&EFS/292.4	
	3 M	=8.1&EFS/292.4	
	A4 AUX1	=8.2&EFS/293.4	Rotary sensor 24VDC
E400.5	5 DI1	=8.2&EFS/293.4&8.2-B1:6	008_01_04_LM
	6 DC24V	=8.2&EFS/293.4	
	7 M	=8.2&EFS/293.4	
	A3 AUX1	=8.1&EFS/292.4	Rotary sensor 24VDC

6ES7131-4BB01-0AA0
+ TM-E15C24-A1

-E4
&ETC/462.2

ET200S SIEMENS
2 DI DC 24 V ST

E400.6	1 DI0	=8.2&EFS/294.4&8.2-B1:6	008_01_05_LM
	2 DC24V	=8.2&EFS/294.4	
	3 M	=8.2&EFS/294.4	
	A4 AUX1	=8.2&EFS/295.4	Rotary sensor 24VDC
E400.7	5 DI1	=8.2&EFS/295.4&8.2-B1:6	008_01_06_LM
	6 DC24V	=8.2&EFS/295.4	
	7 M	=8.2&EFS/295.4	
	A3 AUX1	=8.2&EFS/294.4	Rotary sensor 24VDC

6ES7131-4BB01-0AA0
+ TM-E15C24-A1

-E5
&ETC/462.2

ET200S SIEMENS
2 DI DC 24 V ST

E401.0	1 DI0	=8.2&EFS/296.4&8.2-B1:6	008_01_07_LM
	2 DC24V	=8.2&EFS/296.4	
	3 M	=8.2&EFS/296.4	
	A4 AUX1	=8.2&EFS/297.4	Rotary sensor 24VDC
E401.1	5 DI1	=8.2&EFS/297.4&8.2-B1:6	008_01_08_LM
	6 DC24V	=8.2&EFS/297.4	
	7 M	=8.2&EFS/297.4	
	A3 AUX1	=8.2&EFS/296.4	Rotary sensor 24VDC

6ES7131-4BB01-0AA0
+ TM-E15C24-A1

-E6
&ETC/462.3

ET200S SIEMENS
2 DI DC 24 V ST

E401.2	1 DI0	=9.4&EFS/298.4&9.4-S1::3	009_04_Schluessel_S
	2 DC24V	=9.4&EFS/298.4	
	3 M	=9.4&EFS/298.4	Sweep auger Key switch
	A4 AUX1	=9.5&EFS/299.5	
E401.3	5 DI1	=9.5&EFS/299.4&9.5-S1::3	009_05_Schluessel_S
	6 DC24V	=9.5&EFS/299.4	
	7 M	=9.5&EFS/299.4	Sweep auger Key switch
	A3 AUX1	=9.4&EFS/298.5	

6ES7131-4BB01-0AA0
+ TM-E15C24-A1

-E7
&ETC/462.3

ET200S SIEMENS
2 DI DC 24 V ST

E401.4	1 DI0	=9.6&EFS/300.4&9.6-S1::3	009_06_Schluessel_S
	2 DC24V	=9.6&EFS/300.4	
	3 M	=9.6&EFS/300.4	Sweep auger Key switch
	A4 AUX1	=9.7&EFS/301.5	
E401.5	5 DI1	=9.7&EFS/301.4&9.7-S1::3	009_07_Schluessel_S
	6 DC24V	=9.7&EFS/301.4	
	7 M	=9.7&EFS/301.4	Sweep auger Key switch
	A3 AUX1	=9.6&EFS/300.5	

6ES7131-4BB01-0AA0
+ TM-E15C24-A1

-E8
&ETC/462.3

ET200S SIEMENS
2 DI DC 24 V ST

E401.6	1 DI0	=9.8&EFS/302.4&9.8-S1::3	009_08_Schluessel_S
	2 DC24V	=9.8&EFS/302.4	
	3 M	=9.8&EFS/302.4	Sweep auger Key switch
	A4 AUX1	=11.4&EFS/303.4	
E401.7	5 DI1	=11.4&EFS/303x41.4-8G1:BK	011_04_01_EL_AS
	6 DC24V	=11.4&EFS/303.4	
	7 M	=11.4&EFS/303.4	open
	A3 AUX1	=9.8&EFS/302.5	

6ES7131-4BB01-0AA0
+ TM-E15C24-A1

			Date	12.12.2019	Mixed feed plant Golden Poultry	BEYTEC ... your gateway to success	overview inputs		= SPS_F7.1
			Ed.	willen					+ F27
			Appr		field 7 external signals			1 : 2	Part II
Modification	Date	Name	Original	V:\EPLAN\Projekte\Company\Replace\Beytec\2018\Feed Mill Alssad.elk		Replaced by			Page 450 / Page 605

-E9
&ETC/462.3

ET200S SIEMENS
2 DI DC 24 V ST

E402.0	1 DI0	=11.4&EFS/303x&1.4-BG2:BK	011_04_01_EL_GS
	2 DC24V	=11.4&EFS/303.6	
	3 M	=11.4&EFS/303.6	
	A4 AUX1	=11.4&EFS/304.4	
E402.1	5 DI1	=11.4&EFS/304x&1.4-BG3:BK	011_04_02_EL_AS
	6 DC24V	=11.4&EFS/304.4	
	7 M	=11.4&EFS/304.4	open
	A3 AUX1	=11.4&EFS/303.6	

6ES7131-4BB01-0AA0
+ TM-E15C24-A1

-E10
&ETC/462.3

ET200S SIEMENS
2 DI DC 24 V ST

E402.2	1 DI0	=11.4&EFS/304x&1.4-BG4:BK	011_04_02_EL_GS
	2 DC24V	=11.4&EFS/304.6	
	3 M	=11.4&EFS/304.6	
	A4 AUX1	=11.5&EFS/305.4	
E402.3	5 DI1	=11.5&EFS/305x&1.5-BG1:BK	011_05_01_EL_AS
	6 DC24V	=11.5&EFS/305.4	
	7 M	=11.5&EFS/305.4	open
	A3 AUX1	=11.4&EFS/304.6	

6ES7131-4BB01-0AA0
+ TM-E15C24-A1

-E11
&ETC/462.4

ET200S SIEMENS
2 DI DC 24 V ST

E402.4	1 DI0	=11.5&EFS/305x&1.5-BG2:BK	011_05_01_EL_GS
	2 DC24V	=11.5&EFS/305.6	
	3 M	=11.5&EFS/305.6	
	A4 AUX1	=11.5&EFS/306.4	
E402.5	5 DI1	=11.5&EFS/306x&1.5-BG3:BK	011_05_02_EL_AS
	6 DC24V	=11.5&EFS/306.4	
	7 M	=11.5&EFS/306.4	open
	A3 AUX1	=11.5&EFS/305.6	

6ES7131-4BB01-0AA0
+ TM-E15C24-A1

-E12
&ETC/462.4

ET200S SIEMENS
2 DI DC 24 V ST

E402.6	1 DI0	=11.5&EFS/306x&1.5-BG4:BK	011_05_02_EL_GS
	2 DC24V	=11.5&EFS/306.6	
	3 M	=11.5&EFS/306.6	
	A4 AUX1	=11.6&EFS/307.4	
E402.7	5 DI1	=11.6&EFS/307x&1.6-BG1:BK	011_06_01_EL_AS
	6 DC24V	=11.6&EFS/307.4	
	7 M	=11.6&EFS/307.4	open
	A3 AUX1	=11.5&EFS/306.6	

6ES7131-4BB01-0AA0
+ TM-E15C24-A1

-E13
&ETC/462.4

ET200S SIEMENS
2 DI DC 24 V ST

E403.0	1 DI0	=11.6&EFS/307x&1.6-BG2:BK	011_06_01_EL_GS
	2 DC24V	=11.6&EFS/307.6	
	3 M	=11.6&EFS/307.6	
	A4 AUX1	=11.6&EFS/308.4	
E403.1	5 DI1	=11.6&EFS/308x&1.6-BG3:BK	011_06_02_EL_AS
	6 DC24V	=11.6&EFS/308.4	
	7 M	=11.6&EFS/308.4	open
	A3 AUX1	=11.6&EFS/307.6	

6ES7131-4BB01-0AA0
+ TM-E15C24-A1

-E14
&ETC/462.4

ET200S SIEMENS
2 DI DC 24 V ST

E403.2	1 DI0	=11.6&EFS/308x&1.6-BG4:BK	011_06_02_EL_GS
	2 DC24V	=11.6&EFS/308.6	
	3 M	=11.6&EFS/308.6	
	A4 AUX1	=11.7&EFS/309.4	
E403.3	5 DI1	=11.7&EFS/309x&1.7-BG1:BK	011_07_01_EL_AS
	6 DC24V	=11.7&EFS/309.4	
	7 M	=11.7&EFS/309.4	open
	A3 AUX1	=11.6&EFS/308.6	

6ES7131-4BB01-0AA0
+ TM-E15C24-A1

-E15
&ETC/462.4

ET200S SIEMENS
2 DI DC 24 V ST

E403.4	1 DI0	=11.7&EFS/309x&1.7-BG2:BK	011_07_01_EL_GS
	2 DC24V	=11.7&EFS/309.6	
	3 M	=11.7&EFS/309.6	
	A4 AUX1	=11.7&EFS/310.4	
E403.5	5 DI1	=11.7&EFS/310x&1.7-BG3:BK	011_07_02_EL_AS
	6 DC24V	=11.7&EFS/310.4	
	7 M	=11.7&EFS/310.4	open
	A3 AUX1	=11.7&EFS/309.6	

6ES7131-4BB01-0AA0
+ TM-E15C24-A1

-E16
&ETC/462.4

ET200S SIEMENS
2 DI DC 24 V ST

E403.6	1 DI0	=11.7&EFS/310x&1.7-BG4:BK	011_07_02_EL_GS
	2 DC24V	=11.7&EFS/310.6	
	3 M	=11.7&EFS/310.6	
	A4 AUX1	=11.8&EFS/311.4	
E403.7	5 DI1	=11.8&EFS/311x&1.8-BG1:BK	011_08_01_EL_AS
	6 DC24V	=11.8&EFS/311.4	
	7 M	=11.8&EFS/311.4	open
	A3 AUX1	=11.7&EFS/310.6	

6ES7131-4BB01-0AA0
+ TM-E15C24-A1

			Date	12.12.2019	Mixed feed plant Golden Poultry	BEYTEC ... your gateway to success	overview inputs	= SPS_F7.1
			Ed.	willen				+ F27
			Appr		field 7 external signals		1 : 2	Part II
Modification	Date	Name	Original	V:\EPLAN\Projekte\Company\Replace\Beytec\2018\Feed Mill Alssad.elk	Replaced by			Page 451 / Page 605

-E17
&ETC/462.5

ET200S SIEMENS
2 DI DC 24 V ST

E404.0	1 DI0	=11.8&EFS/311.3&11.8-BG2:BK	011_08_01_EL_GS
	2 DC24V	=11.8&EFS/311.6	
	3 M	=11.8&EFS/311.6	
	A4 AUX1	=11.8&EFS/312.4	
E404.1	5 DI1	=11.8&EFS/312.3&11.8-BG3:BK	011_08_02_EL_AS
	6 DC24V	=11.8&EFS/312.4	
	7 M	=11.8&EFS/312.4	open
	A3 AUX1	=11.8&EFS/311.6	

6ES7131-4BB01-0AA0
+ TM-E15C24-A1

-E18
&ETC/462.5

ET200S SIEMENS
2 DI DC 24 V ST

E404.2	1 DI0	=11.8&EFS/312.3&11.8-BG4:BK	011_08_02_EL_GS
	2 DC24V	=11.8&EFS/312.6	
	3 M	=11.8&EFS/312.6	
	A4 AUX1	=13&EFS/313.5	
E404.3	5 DI1	=13&EFS/313.6=13-BG2:BK	013_DZW
	6 DC24V	=13&EFS/313.5	
	7 M	=13&EFS/313.5	
	A3 AUX1	=11.8&EFS/312.6	

6ES7131-4BB01-0AA0
+ TM-E15C24-A1

-E19
&ETC/462.5

ET200S SIEMENS
2 DI DC 24 V ST

E404.4	1 DI0	=13&EFS/313.3=13-BG1:4	013_SK
	2 DC24V	=13&EFS/313.3	
	3 M	=13&EFS/313.3	overflow flap
	A4 AUX1	=50&EFS/314.5	
E404.5	5 DI1	=50&EFS/314.6=50-BG2:BK	050_DZW
	6 DC24V	=50&EFS/314.5	
	7 M	=50&EFS/314.5	
	A3 AUX1	=13&EFS/313.3	

6ES7131-4BB01-0AA0
+ TM-E15C24-A1

-E20
&ETC/462.5

ET200S SIEMENS
2 DI DC 24 V ST

E404.6	1 DI0	=50&EFS/314.3=50-BG1:4	050_SK
	2 DC24V	=50&EFS/314.3	
	3 M	=50&EFS/314.3	overflow flap
	A4 AUX1	=51&EFS/315.5	
E404.7	5 DI1	=51&EFS/315.6=51-BG2:BK	051_DZW
	6 DC24V	=51&EFS/315.5	
	7 M	=51&EFS/315.5	
	A3 AUX1	=50&EFS/314.3	

6ES7131-4BB01-0AA0
+ TM-E15C24-A1

-E21
&ETC/462.5

ET200S SIEMENS
2 DI DC 24 V ST

E405.0	1 DI0	=51&EFS/315.3=51-BG1:4	051_SK
	2 DC24V	=51&EFS/315.3	
	3 M	=51&EFS/315.3	overflow flap
	A4 AUX1	=55&EFS/316.5	
E405.1	5 DI1	=55&EFS/316.6=55-BG2:BK	055_DZW
	6 DC24V	=55&EFS/316.5	
	7 M	=55&EFS/316.5	
	A3 AUX1	=51&EFS/315.3	

6ES7131-4BB01-0AA0
+ TM-E15C24-A1

-E22
&ETC/462.6

ET200S SIEMENS
2 DI DC 24 V ST

E405.2	1 DI0	=55&EFS/316.3=55-BG1:4	055_SK
	2 DC24V	=55&EFS/316.3	
	3 M	=55&EFS/316.3	overflow flap
	A4 AUX1	=56&EFS/317.5	
E405.3	5 DI1	=56&EFS/317.6=56-BG2:BK	056_DZW
	6 DC24V	=56&EFS/317.5	
	7 M	=56&EFS/317.5	
	A3 AUX1	=55&EFS/316.3	

6ES7131-4BB01-0AA0
+ TM-E15C24-A1

-E23
&ETC/462.6

ET200S SIEMENS
2 DI DC 24 V ST

E405.4	1 DI0	=56&EFS/317.3=56-BG1:4	056_SK
	2 DC24V	=56&EFS/317.3	
	3 M	=56&EFS/317.3	overflow flap
	A4 AUX1	=57&EFS/318.5	
E405.5	5 DI1	=57&EFS/318.6=57-BG2:BK	057_DZW
	6 DC24V	=57&EFS/318.5	
	7 M	=57&EFS/318.5	
	A3 AUX1	=56&EFS/317.3	

6ES7131-4BB01-0AA0
+ TM-E15C24-A1

-E24
&ETC/462.6

ET200S SIEMENS
2 DI DC 24 V ST

E405.6	1 DI0	=57&EFS/318.3=57-BG1:4	057_SK
	2 DC24V	=57&EFS/318.3	
	3 M	=57&EFS/318.3	overflow flap
	A4 AUX1	=113&EFS/319.5	
E405.7	5 DI1	=113&EFS/319.6&113-BG2:BK	113_DZW
	6 DC24V	=113&EFS/319.5	
	7 M	=113&EFS/319.5	
	A3 AUX1	=57&EFS/318.3	

6ES7131-4BB01-0AA0
+ TM-E15C24-A1

			Date	12.12.2019	Mixed feed plant Golden Poultry	BEYTEC ... your gateway to success	overview inputs	= SPS_F7.1
			Ed.	willen				+ F27
			Appr		field 7 external signals		1 : 2	Part II
Modification	Date	Name	Original	V:\EPLAN\Projekte\Company\Replace\Beytec\2018\Feed Mill Alssad.elk	Replaced by			Page 452 / Page 605

-E25
&ETC/462.6

ET200S SIEMENS
2 DI DC 24 V ST

E406.0	1 DI0	=113&EFS/319.3	113_SK
	2 DC24V	=113&EFS/319.3	
	3 M	=113&EFS/319.3	overflow flap
	A4 AUX1	=114.2&EFS/320.4	Rotary sensor 24VDC
E406.1	5 DI1	=114.2&EFS/320.4	114_02_VM
	6 DC24V	=114.2&EFS/320.4	
	7 M	=114.2&EFS/320.4	
	A3 AUX1	=113&EFS/319.3	

6ES7131-4BB01-0AA0
+ TM-E15C24-A1

-E26
&ETC/462.6

ET200S SIEMENS
2 DI DC 24 V ST

E406.2	1 DI0	=205&EFS/321.4	205_DZW
	2 DC24V	=205&EFS/321.4	
	3 M	=205&EFS/321.4	
	A4 AUX1	=205&EFS/322.1	
E406.3	5 DI1	=205&EFS/322.1	205_SLO
	6 DC24V	=205&EFS/322.1	
	7 M	=205&EFS/322.1	
	A3 AUX1	=205&EFS/321.4	

6ES7131-4BB01-0AA0
+ TM-E15C24-A1

-E27
&ETC/462.6

ET200S SIEMENS
2 DI DC 24 V ST

E406.4	1 DI0	=205&EFS/322.5	205_SLU
	2 DC24V	=205&EFS/322.5	
	3 M	=205&EFS/322.5	
	A4 AUX1	=205.1&EFS/323.5	
E406.5	5 DI1	=205.1&EFS/323.5	205_01_EL_AS
	6 DC24V	=205.1&EFS/323.5	
	7 M	=205.1&EFS/323.5	-> pre hopper mixer
	A3 AUX1	=205&EFS/322.6	

6ES7131-4BB01-0AA0
+ TM-E15C24-A1

-E28
&ETC/462.7

ET200S SIEMENS
2 DI DC 24 V ST

E406.6	1 DI0	=205.1&EFS/323.6	205_01_EL_GS
	2 DC24V	=205.1&EFS/323.6	-> pre hopper mill/rollerMill
	3 M	=205.1&EFS/323.7	
	A4 AUX1	=206.1&EFS/324.4	Rotary sensor 24VDC
E406.7	5 DI1	=206.1&EFS/324.4	206_01_LM
	6 DC24V	=206.1&EFS/324.4	
	7 M	=206.1&EFS/324.4	
	A3 AUX1	=205.1&EFS/323.7	

6ES7131-4BB01-0AA0
+ TM-E15C24-A1

-E29
&ETC/462.7

ET200S SIEMENS
2 DI DC 24 V ST

E407.0	1 DI0	=206.2.1&EFS/325.4	206_02_01_EL_AS
	2 DC24V	=206.2.1&EFS/325.4	
	3 M	=206.2.1&EFS/325.4	
	A4 AUX1	=206.2.1&EFS/325.6	
E407.1	5 DI1	=206.2.1&EFS/325.5	206_02_01_EL_GS
	6 DC24V	=206.2.1&EFS/325.5	
	7 M	=206.2.1&EFS/325.5	
	A3 AUX1	=206.2.1&EFS/325.4	

6ES7131-4BB01-0AA0
+ TM-E15C24-A1

-E30
&ETC/462.7

ET200S SIEMENS
2 DI DC 24 V ST

E407.2	1 DI0	=206.2.2&EFS/326.4	206_02_02_EL_AS
	2 DC24V	=206.2.2&EFS/326.4	
	3 M	=206.2.2&EFS/326.4	
	A4 AUX1	=206.2.2&EFS/326.6	
E407.3	5 DI1	=206.2.2&EFS/326.5	206_02_02_EL_GS
	6 DC24V	=206.2.2&EFS/326.5	
	7 M	=206.2.2&EFS/326.5	
	A3 AUX1	=206.2.2&EFS/326.4	

6ES7131-4BB01-0AA0
+ TM-E15C24-A1

-E31
&ETC/462.7

ET200S SIEMENS
2 DI DC 24 V ST

E407.4	1 DI0	=209.1&EFS/327.4	209_01_VM
	2 DC24V	=209.1&EFS/327.4	
	3 M	=209.1&EFS/327.4	
	A4 AUX1	=209.2&EFS/328.4	Rotary sensor 24VDC
E407.5	5 DI1	=209.2&EFS/328.4	209_02_LM
	6 DC24V	=209.2&EFS/328.4	
	7 M	=209.2&EFS/328.4	
	A3 AUX1	=209.1&EFS/327.4	Rotary sensor 24VDC

6ES7131-4BB01-0AA0
+ TM-E15C24-A1

-E32
&ETC/462.7

ET200S SIEMENS
2 DI DC 24 V ST

E407.6	1 DI0	=211&EFS/329.5	211_DZW
	2 DC24V	=211&EFS/329.5	
	3 M	=211&EFS/329.5	
	A4 AUX1	=212&EFS/330.5	
E407.7	5 DI1	=212&EFS/330.5	212_DZW
	6 DC24V	=212&EFS/330.5	
	7 M	=212&EFS/330.5	
	A3 AUX1	=211&EFS/329.5	

6ES7131-4BB01-0AA0
+ TM-E15C24-A1

			Date	12.12.2019	Mixed feed plant Golden Poultry	BEYTEC ... your gateway to success	overview inputs	= SPS_F7.1
			Ed.	willen				+ F27
			Appr		field 7 external signals		1 : 2	Part II
Modification	Date	Name	Original	V:\EPLAN\Projekte\Company\Replace\Beytec\2018\Feed Mill Alssad.elk	Replaced by			Page 453 / Page 605

-E33
&ETC/462.2

ET200S SIEMENS
2 DI DC 24 V ST

E408.0	1 DI0	=213&EFS/331.6	213_DZW
	2 DC24V	=213&EFS/331.5	
	3 M	=213&EFS/331.5	
	A4 AUX1	=213&EFS/331.3	
E408.1	5 DI1	=213&EFS/331.6	213_SK
	6 DC24V	=213&EFS/331.3	
	7 M	=213&EFS/331.3	overflow flap
	A3 AUX1	=213&EFS/331.5	

6ES7131-4BB01-0AA0
+ TM-E15C24-A1

-E34
&ETC/462.2

ET200S SIEMENS
2 DI DC 24 V ST

E408.2	1 DI0	=214.2&EFS/332.4	214_02_VM
	2 DC24V	=214.2&EFS/332.4	
	3 M	=214.2&EFS/332.4	
	A4 AUX1	=221&EFS/333.8	
E408.3	5 DI1	=221&EFS/333.6	221_T_Schnellstop
	6 DC24V	=221&EFS/333.7	
	7 M	=221&EFS/333.7	
	A3 AUX1	=214.2&EFS/332.4	Rotary sensor 24VDC

6ES7131-4BB01-0AA0
+ TM-E15C24-A1

-E35
&ETC/462.2

ET200S SIEMENS
2 DI DC 24 V ST

E408.4	1 DI0	=221&EFS/333.6	221_T_START
	2 DC24V	=221&EFS/333.2	Start
	3 M	=221&EFS/333.3	
	A4 AUX1	=221&EFS/333.5	
E408.5	5 DI1	=221&EFS/333.6	221_T_Stop
	6 DC24V	=221&EFS/333.5	
	7 M	=221&EFS/333.5	
	A3 AUX1	=221&EFS/333.3	

6ES7131-4BB01-0AA0
+ TM-E15C24-A1

-E36
&ETC/462.3

ET200S SIEMENS
2 DI DC 24 V ST

E408.6	1 DI0	=221&EFS/334.6	221_DZW
	2 DC24V	=221&EFS/334.5	
	3 M	=221&EFS/334.5	
	A4 AUX1	=221&EFS/334.3	
E408.7	5 DI1	=221&EFS/334.6	221_SK
	6 DC24V	=221&EFS/334.3	
	7 M	=221&EFS/334.3	overflow flap
	A3 AUX1	=221&EFS/334.5	

6ES7131-4BB01-0AA0
+ TM-E15C24-A1

-E37
&ETC/462.3

ET200S SIEMENS
2 DI DC 24 V ST

E409.0	1 DI0	=222&EFS/335.6	222_DZW
	2 DC24V	=222&EFS/335.4	
	3 M	=222&EFS/335.4	
	A4 AUX1	=222&EFS/336.1	
E409.1	5 DI1	=222&EFS/336.6	222_SLO
	6 DC24V	=222&EFS/336.1	
	7 M	=222&EFS/336.1	
	A3 AUX1	=222&EFS/335.4	

6ES7131-4BB01-0AA0
+ TM-E15C24-A1

-E38
&ETC/462.3

ET200S SIEMENS
2 DI DC 24 V ST

E409.2	1 DI0	=222&EFS/336.6	222_SLU
	2 DC24V	=222&EFS/336.5	
	3 M	=222&EFS/336.5	
	A4 AUX1	=223.1&EFS/337.5	
E409.3	5 DI1	=223.1&EFS/337.6	223_01_EL_AS
	6 DC24V	=223.1&EFS/337.5	
	7 M	=223.1&EFS/337.5	-> silo 225
	A3 AUX1	=222&EFS/336.6	

6ES7131-4BB01-0AA0
+ TM-E15C24-A1

-E39
&ETC/462.3

ET200S SIEMENS
2 DI DC 24 V ST

E409.4	1 DI0	=223.1&EFS/337.6	223_01_EL_GS
	2 DC24V	=223.1&EFS/337.6	-> Pos. 223.2
	3 M	=223.1&EFS/337.7	
	A4 AUX1	=223.2&EFS/338.5	
E409.5	5 DI1	=223.2&EFS/338.6	223_02_EL_AS
	6 DC24V	=223.2&EFS/338.5	
	7 M	=223.2&EFS/338.5	-> silo 224
	A3 AUX1	=223.1&EFS/337.7	

6ES7131-4BB01-0AA0
+ TM-E15C24-A1

-E40
&ETC/462.3

ET200S SIEMENS
2 DI DC 24 V ST

E409.6	1 DI0	=223.2&EFS/338.6	223_02_EL_GS
	2 DC24V	=223.2&EFS/338.6	-> Pos. 223.3
	3 M	=223.2&EFS/338.7	
	A4 AUX1	=223.3&EFS/339.5	
E409.7	5 DI1	=223.3&EFS/339.6	223_03_EL_AS
	6 DC24V	=223.3&EFS/339.5	
	7 M	=223.3&EFS/339.5	-> silo 223
	A3 AUX1	=223.2&EFS/338.7	

6ES7131-4BB01-0AA0
+ TM-E15C24-A1

			Date	12.12.2019	Mixed feed plant Golden Poultry	BEYTEC ... your gateway to success	overview inputs	= SPS_F7.1
			Ed.	willen				+ F27
			Appr		field 7 external signals		1 : 2	Part II
Modification	Date	Name	Original	V:\EPLAN\Projekte\Company\Replace\Beytec\2018\Feed Mill Alssad.elk		Replaced by		Page 454 / Page 605

-E41
&ETC/462.4

ET200S SIEMENS
2 DI DC 24 V ST

E410.0	1 DI0	=223.3&EFS/340=223.3-BG2:BK	223_03_EL_GS
	2 DC24V	=223.3&EFS/339.6	-> Pos. 223.4
	3 M	=223.3&EFS/339.7	
	A4 AUX1	=223.4&EFS/340.5	
E410.1	5 DI1	=223.4&EFS/340=223.4-BG1:BK	223_04_EL_AS
	6 DC24V	=223.4&EFS/340.5	
	7 M	=223.4&EFS/340.5	-> silo 222
	A3 AUX1	=223.3&EFS/339.7	

6ES7131-4BB01-0AA0
+ TM-E15C24-A1

-E42
&ETC/462.4

ET200S SIEMENS
2 DI DC 24 V ST

E410.2	1 DI0	=223.4&EFS/340=223.4-BG2:BK	223_04_EL_GS
	2 DC24V	=223.4&EFS/340.6	-> silo 221
	3 M	=223.4&EFS/340.7	
	A4 AUX1	=225.1.1&EFS/341.4	Rotary sensor 24VDC
E410.3	5 DI1	=225.1.1&EFS/342=225.1.1-B1:6	225_01_01_VM
	6 DC24V	=225.1.1&EFS/341.4	
	7 M	=225.1.1&EFS/341.4	
	A3 AUX1	=223.4&EFS/340.7	

6ES7131-4BB01-0AA0
+ TM-E15C24-A1

-E43
&ETC/462.4

ET200S SIEMENS
2 DI DC 24 V ST

E410.4	1 DI0	=225.1.2&EFS/342=225.1.2-B1:6	225_01_02_VM
	2 DC24V	=225.1.2&EFS/342.4	
	3 M	=225.1.2&EFS/342.4	
	A4 AUX1	=225.1.3&EFS/343.4	Rotary sensor 24VDC
E410.5	5 DI1	=225.1.3&EFS/343=225.1.3-B1:6	225_01_03_VM
	6 DC24V	=225.1.3&EFS/343.4	
	7 M	=225.1.3&EFS/343.4	
	A3 AUX1	=225.1.2&EFS/342.4	Rotary sensor 24VDC

6ES7131-4BB01-0AA0
+ TM-E15C24-A1

-E44
&ETC/462.4

ET200S SIEMENS
2 DI DC 24 V ST

E410.6	1 DI0	=225.1.4&EFS/344=225.1.4-B1:6	225_01_04_VM
	2 DC24V	=225.1.4&EFS/344.4	
	3 M	=225.1.4&EFS/344.4	
	A4 AUX1	=225.1.5&EFS/345.4	Rotary sensor 24VDC
E410.7	5 DI1	=225.1.5&EFS/345=225.1.5-B1:6	225_01_05_VM
	6 DC24V	=225.1.5&EFS/345.4	
	7 M	=225.1.5&EFS/345.4	
	A3 AUX1	=225.1.4&EFS/344.4	Rotary sensor 24VDC

6ES7131-4BB01-0AA0
+ TM-E15C24-A1

-E45
&ETC/462.4

ET200S SIEMENS
2 DI DC 24 V ST

E411.0	1 DI0	=225.2.1&EFS/346=225.2.1-B1:6	225_02_01_LM
	2 DC24V	=225.2.1&EFS/346.4	
	3 M	=225.2.1&EFS/346.4	
	A4 AUX1	=225.2.2&EFS/347.4	Rotary sensor 24VDC
E411.1	5 DI1	=225.2.2&EFS/347=225.2.2-B1:6	225_02_02_LM
	6 DC24V	=225.2.2&EFS/347.4	
	7 M	=225.2.2&EFS/347.4	
	A3 AUX1	=225.2.1&EFS/346.4	Rotary sensor 24VDC

6ES7131-4BB01-0AA0
+ TM-E15C24-A1

-E46
&ETC/462.4

ET200S SIEMENS
2 DI DC 24 V ST

E411.2	1 DI0	=225.2.3&EFS/348=225.2.3-B1:6	225_02_03_LM
	2 DC24V	=225.2.3&EFS/348.4	
	3 M	=225.2.3&EFS/348.4	
	A4 AUX1	=225.2.4&EFS/349.4	Rotary sensor 24VDC
E411.3	5 DI1	=225.2.4&EFS/349=225.2.4-B1:6	225_02_04_LM
	6 DC24V	=225.2.4&EFS/349.4	
	7 M	=225.2.4&EFS/349.4	
	A3 AUX1	=225.2.3&EFS/348.4	Rotary sensor 24VDC

6ES7131-4BB01-0AA0
+ TM-E15C24-A1

-E47
&ETC/462.5

ET200S SIEMENS
2 DI DC 24 V ST

E411.4	1 DI0	=225.2.5&EFS/350=225.2.5-B1:6	225_02_05_LM
	2 DC24V	=225.2.5&EFS/350.4	
	3 M	=225.2.5&EFS/350.4	
	A4 AUX1	=228&EFS/351.5	
E411.5	5 DI1	=228&EFS/351=228-BG1:BK	228_EL_AS
	6 DC24V	=228&EFS/351.5	
	7 M	=228&EFS/351.5	Open
	A3 AUX1	=225.2.5&EFS/350.4	Rotary sensor 24VDC

6ES7131-4BB01-0AA0
+ TM-E15C24-A1

-E48
&ETC/462.5

ET200S SIEMENS
2 DI DC 24 V ST

E411.6	1 DI0	=228&EFS/351=228-BG2:BK	228_EL_GS
	2 DC24V	=228&EFS/351.6	Closed
	3 M	=228&EFS/351.7	
	A4 AUX1	=229&EFS/352.5	
E411.7	5 DI1	=229&EFS/352=229-BG1:BK	229_EL_AS
	6 DC24V	=229&EFS/352.5	
	7 M	=229&EFS/352.5	Open
	A3 AUX1	=228&EFS/351.7	

6ES7131-4BB01-0AA0
+ TM-E15C24-A1

			Date	12.12.2019	Mixed feed plant Golden Poultry	BEYTEC ... your gateway to success	overview inputs		= SPS_F7.1
			Ed.	willen					+ F27
			Appr		field 7 external signals			1 : 2	Part II
Modification	Date	Name	Original	V:\EPLAN\Projekte\Company\Replace\Beytec\2018\Feed Mill Alssad.elk		Replaced by			Page 455 / Page 605

-E49
&ETC/462.5

ET200S SIEMENS
2 DI DC 24 V ST

E412.0	1 DI0	=229&EFS/352.6#229-BG2:BK	229_EL_GS
	2 DC24V	=229&EFS/352.6	Closed
	3 M	=229&EFS/352.7	
	A4 AUX1	=230&EFS/353.4	
E412.1	5 DI1	=230&EFS/353.6230-S1:.4	230_T_HZ
	6 DC24V	=230&EFS/353.4	
	7 M	=230&EFS/353.4	operating unit hand addition
	A3 AUX1	=229&EFS/352.7	

6ES7131-4BB01-0AA0
+ TM-E15C24-A1

-E50
&ETC/462.5

ET200S SIEMENS
2 DI DC 24 V ST

E412.2	1 DI0	=230.1&EFS/354.5230.1-BG1:BK	230_01_EL_AS
	2 DC24V	=230.1&EFS/354.5	
	3 M	=230.1&EFS/354.5	Open
	A4 AUX1	=230.1&EFS/354.7	
E412.3	5 DI1	=230.1&EFS/354.6230.1-BG2:BK	230_01_EL_GS
	6 DC24V	=230.1&EFS/354.6	Closed
	7 M	=230.1&EFS/354.7	
	A3 AUX1	=230.1&EFS/354.5	

6ES7131-4BB01-0AA0
+ TM-E15C24-A1

-E51
&ETC/462.5

ET200S SIEMENS
2 DI DC 24 V ST

E412.4	1 DI0	=240.1&EFS/356.6240.1-B1:6	240_01_LM
	2 DC24V	=240.1&EFS/355.4	
	3 M	=240.1&EFS/355.4	
	A4 AUX1	=241&EFS/356.4	
E412.5	5 DI1	=241&EFS/356.4241-BG1:BK	241_EL_AS
	6 DC24V	=241&EFS/356.4	
	7 M	=241&EFS/356.4	Open
	A3 AUX1	=240.1&EFS/355.4	Rotary sensor 24VDC

6ES7131-4BB01-0AA0
+ TM-E15C24-A1

-E52
&ETC/462.6

ET200S SIEMENS
2 DI DC 24 V ST

E412.6	1 DI0	=241&EFS/356.6241-BG2:BK	241_EL_GS
	2 DC24V	=241&EFS/356.5	Closed
	3 M	=241&EFS/356.5	
	A4 AUX1	=242&EFS/357.1	
E412.7	5 DI1	=242&EFS/357.4242-BG1:BK	242_02_EL1_AS
	6 DC24V	=242&EFS/357.0	
	7 M	=242&EFS/357.0	
	A3 AUX1	=241&EFS/356.6	

6ES7131-4BB01-0AA0
+ TM-E15C24-A1

-E53
&ETC/462.6

ET200S SIEMENS
2 DI DC 24 V ST

E413.0	1 DI0	=242&EFS/357.6242-BG2:BK	242_02_EL1_GS
	2 DC24V	=242&EFS/357.2	
	3 M	=242&EFS/357.2	
	A4 AUX1	=242&EFS/357.3	open signal
E413.1	5 DI1	=242&EFS/357.6242-BG3:BK	242_02_EL2_AS
	6 DC24V	=242&EFS/357.3	
	7 M	=242&EFS/357.3	
	A3 AUX1	=242&EFS/357.2	closed Signal

6ES7131-4BB01-0AA0
+ TM-E15C24-A1

-E54
&ETC/462.6

ET200S SIEMENS
2 DI DC 24 V ST

E413.2	1 DI0	=242&EFS/357.4242-BG4:BK	242_02_EL2_GS
	2 DC24V	=242&EFS/357.4	
	3 M	=242&EFS/357.4	
	A4 AUX1	=242&EFS/357.5	open signal
E413.3	5 DI1	=242&EFS/357.6242-BG5:BK	242_03_EL3_AS
	6 DC24V	=242&EFS/357.5	
	7 M	=242&EFS/357.5	
	A3 AUX1	=242&EFS/357.4	closed Signal

6ES7131-4BB01-0AA0
+ TM-E15C24-A1

-E55
&ETC/462.6

ET200S SIEMENS
2 DI DC 24 V ST

E413.4	1 DI0	=242&EFS/357.6242-BG6:BK	242_03_EL3_GS
	2 DC24V	=242&EFS/357.6	
	3 M	=242&EFS/357.6	
	A4 AUX1	=242&EFS/357.7	open signal
E413.5	5 DI1	=242&EFS/357.6242-BG7:BK	242_04_EL4_AS
	6 DC24V	=242&EFS/357.7	
	7 M	=242&EFS/357.7	
	A3 AUX1	=242&EFS/357.6	closed Signal

6ES7131-4BB01-0AA0
+ TM-E15C24-A1

-E56
&ETC/462.6

ET200S SIEMENS
2 DI DC 24 V ST

E413.6	1 DI0	=242&EFS/357.6242-BG8:BK	242_04_EL4_GS
	2 DC24V	=242&EFS/357.8	
	3 M	=242&EFS/357.8	
	A4 AUX1	=243&EFS/361.4	
E413.7	5 DI1	=243&EFS/361.4243-A1:25	243_01_IMP
	6 DC24V	=243&EFS/361.4	
	7 M	=243&EFS/361.4	
	A3 AUX1	=242&EFS/357.8	closed Signal

6ES7131-4BB01-0AA0
+ TM-E15C24-A1

			Date	12.12.2019	Mixed feed plant Golden Poultry	BEYTEC ... your gateway to success	overview inputs	= SPS_F7.1
			Ed.	willen				+ F27
			Appr		field 7 external signals		1 : 2	Part II
Modification	Date	Name	Original	V:\EPLAN\Projekte\Company\Alpaca\Beytec\2018\Feed Mill Alssad.elk		Replaced by		Page 456 / Page 605

-E57
&ETC/462.6

ET200S SIEMENS
2 DI DC 24 V ST

E414.0	1 DI0	=243&EFS/362.4243-BG1:BK	243_02_EL_AS
	2 DC24V	=243&EFS/362.4	
	3 M	=243&EFS/362.4	
	A4 AUX1	=243&EFS/362.6	
E414.1	5 DI1	=243&EFS/362.6243-BG2:BK	243_02_EL_GS
	6 DC24V	=243&EFS/362.5	
	7 M	=243&EFS/362.5	
	A3 AUX1	=243&EFS/362.4	

6ES7131-4BB01-0AA0
+ TM-E15C24-A1

-E58
&ETC/462.7

ET200S SIEMENS
2 DI DC 24 V ST

E414.2	1 DI0	=243&EFS/359.6243-B1	243_04_VM
	2 DC24V	=243&EFS/359.4	
	3 M	=243&EFS/359.4	
	A4 AUX1	=243&EFS/360.4	
E414.3	5 DI1	=243&EFS/360.6243-B1	243_05_LM
	6 DC24V	=243&EFS/360.4	
	7 M	=243&EFS/360.4	
	A3 AUX1	=243&EFS/359.4	

6ES7131-4BB01-0AA0
+ TM-E15C24-A1

-E59
&ETC/462.7

ET200S SIEMENS
2 DI DC 24 V ST

E414.4	1 DI0	=244.1&EFS/364.4244.1-B1:6	244_01_LM
	2 DC24V	=244.1&EFS/364.4	
	3 M	=244.1&EFS/364.4	
	A4 AUX1	=245&EFS/365.5	
E414.5	5 DI1	=245&EFS/365.6245-BG2:BK	245_DZW
	6 DC24V	=245&EFS/365.5	
	7 M	=245&EFS/365.5	
	A3 AUX1	=244.1&EFS/364.4	Rotary sensor 24VDC

6ES7131-4BB01-0AA0
+ TM-E15C24-A1

-E60
&ETC/462.7

ET200S SIEMENS
2 DI DC 24 V ST

E414.6	1 DI0	=245&EFS/365.6245-BG1:4	245_SK
	2 DC24V	=245&EFS/365.3	
	3 M	=245&EFS/365.3	overflow flap
	A4 AUX1	=246&EFS/366.4	
E414.7	5 DI1	=246&EFS/366.6246-BG1:BK	246_DZW
	6 DC24V	=246&EFS/366.4	
	7 M	=246&EFS/366.4	
	A3 AUX1	=245&EFS/365.3	

6ES7131-4BB01-0AA0
+ TM-E15C24-A1

			Date	12.12.2019	Mixed feed plant Golden Poultry	BEYTEC ... your gateway to success	overview inputs
			Ed.	willen	field 7 external signals		
			Appr				
Modification	Date	Name	Original	V:\EPLAN\Projekte\Company\Replace\Beytec\2018\Feed Mill Alssad.elk	Replaced by		

1 : 2 | Part II | = SPS_F7.1 | + F27 | Page 457 | Page 605

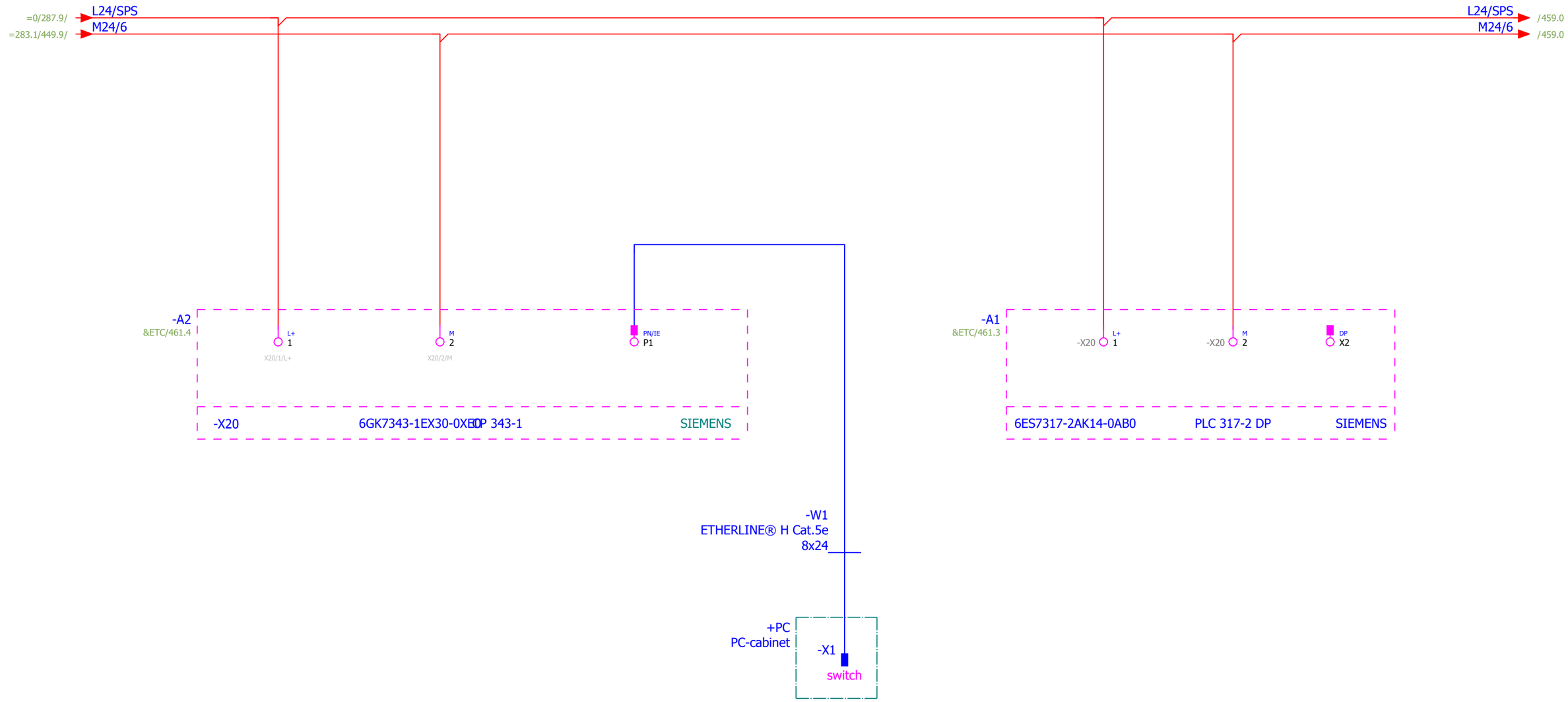

			Date	12.12.2019	Mixed feed plant Golden Poultry	BEYTEC ... your gateway to success	power supply PLC		= SPS_F7.1	
			Ed.	willen					+ F27	
			Appr		field 7 external signals			1 : 1	Part II	Page 458
Modification	Date	Name	Original	V:\EPLAN\Projekte\Company\Replace\Beytec\2018\Feed Mill Alssad.elk	Replaced by					Page 605

Replaced by BEYTEC

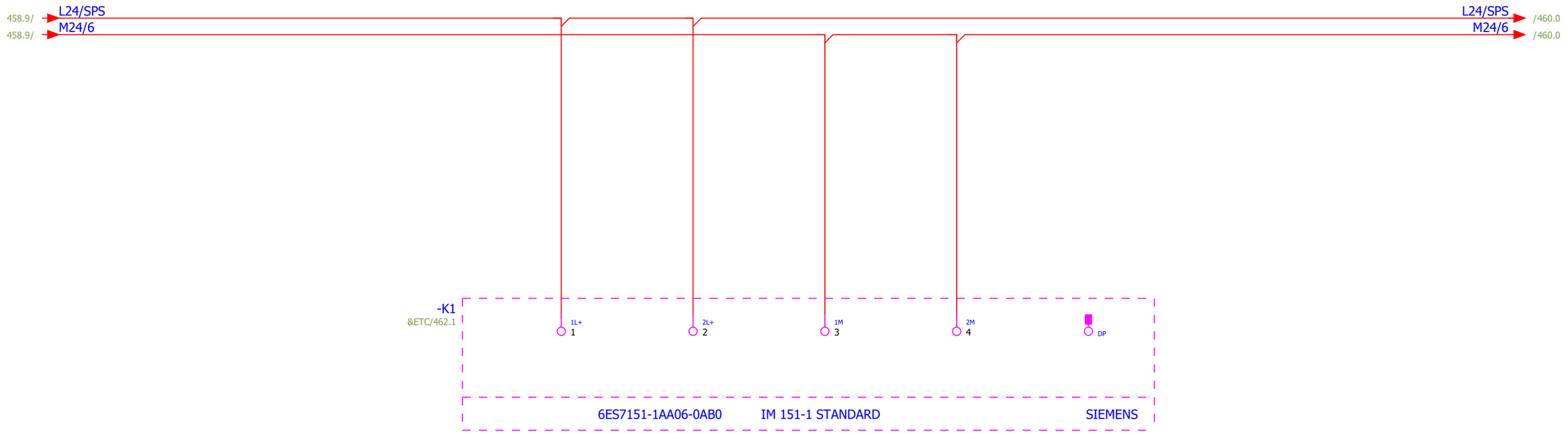

			Date	12.12.2019	Mixed feed plant Golden Poultry	BEYTEC ... your gateway to success	PLC power supply bus coupler	= SPS_F7.1	
			Ed.	willen				+ F27	
			Appr		field 7 external signals			1 : 1 Part II	Page 459
Modification	Date	Name	Original	V:\EPLAN\Projekte\Company\Replace\Beytec\2018\Feed Mill Alssad.elk	Replaced by				Page 605

Replace(Beytec)

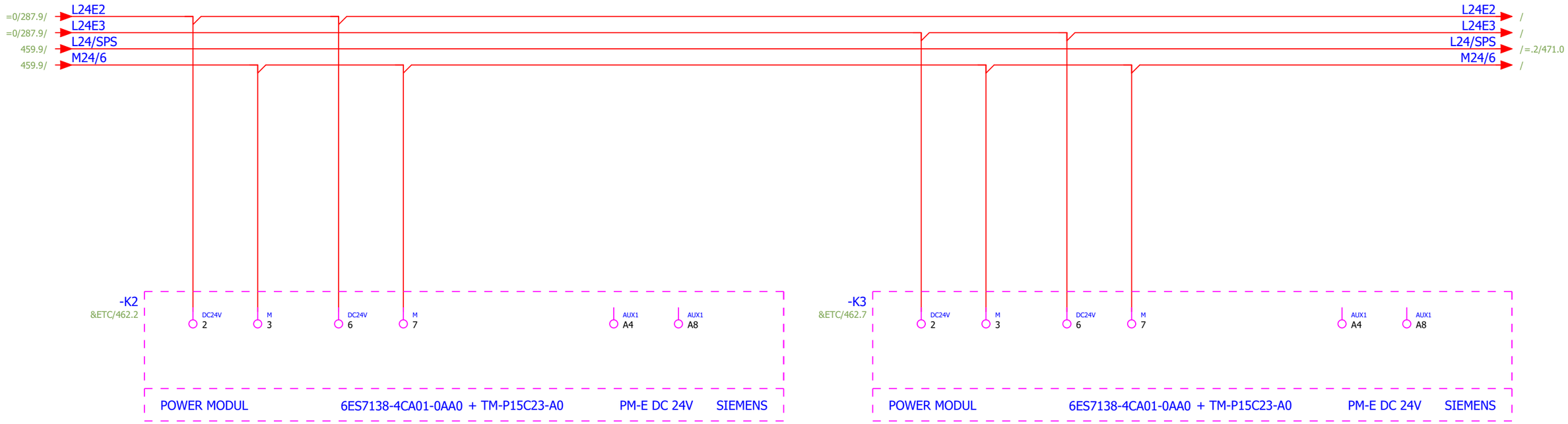

			Date	12.12.2019	Mixed feed plant Golden Poultry	BEYTEC ... your gateway to success	PLC power supply power module		= SPS_F7.1
			Ed.	willen					+ F27
			Appr		field 7 external signals			1 : 1	Part II
Modification	Date	Name	Original	V:\EPLAN\Projekte\Company\Replace\Beytec\2018\Feed Mill Alssad.elk	Replaced by				Page 460
									Page 605

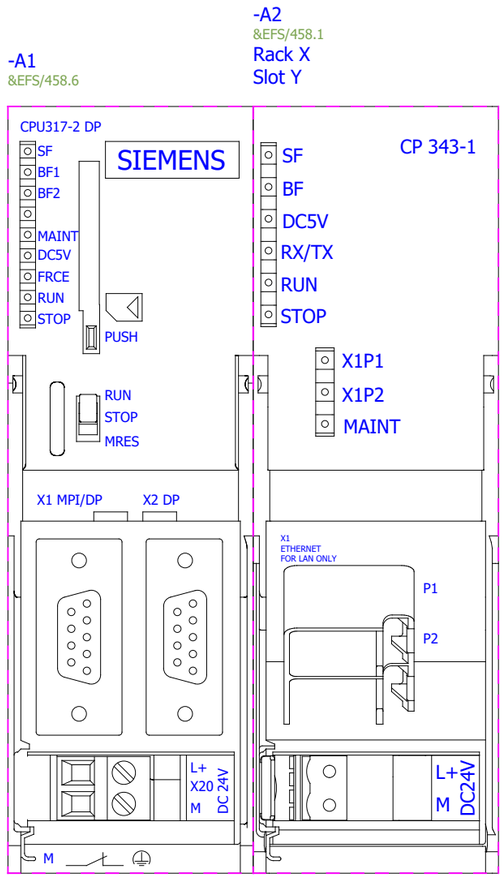
-A1
&EFS/458.6
-A2
&EFS/458.1
Rack X
Slot Y
CPU317-2 DP
SIEMENS
SF
BF1
BF2
MAINT
DC5V
FRCE
RUN
STOP
PUSH
RUN
STOP
MRES
X1 MPI/DP
X2 DP
L+
X20
M
DC 24V
M
CP 343-1
SF
BF
DC5V
RX/TX
RUN
STOP
X1P1
X1P2
MAINT
X1
ETHERNET
FOR LAN ONLY
P1
P2
L+
M
DC24V

=.2&EFA1/463

			Date	12.12.2019	Mixed feed plant Golden Poultry	BEYTEC ... your gateway to success	PLC overview field 7 station 1	= SPS_F7.1	
			Ed.	willen				+ F27	
			Appr		field 7 external signals		1 : 2	Part II	Page 462
Modification	Date	Name	Original	V:\EPLAN\Projekte\Company\Replace\Beytec\2018\Feed Mill Alssad.elk	Replaced by				Page 605

-E1
&ETC/473.2

ET200S SIEMENS
2 DI DC 24 V ST

E415.0	1 DI0	=246&EFS/367.6	246_SLO
	2 DC24V	=246&EFS/367.1	
	3 M	=246&EFS/367.1	
	A4 AUX1	=246&EFS/367.6	
E415.1	5 DI1	=246&EFS/367.6	246_SLU
	6 DC24V	=246&EFS/367.5	
	7 M	=246&EFS/367.5	
	A3 AUX1	=246&EFS/367.1	

6ES7131-4BB01-0AA0
+ TM-E15C24-A1

-E2
&ETC/473.2

ET200S SIEMENS
2 DI DC 24 V ST

E415.2	1 DI0	=247&EFS/368.6	247_DZW
	2 DC24V	=247&EFS/368.5	
	3 M	=247&EFS/368.5	
	A4 AUX1	=247&EFS/368.3	
E415.3	5 DI1	=247&EFS/368.6	247_SK
	6 DC24V	=247&EFS/368.3	
	7 M	=247&EFS/368.3	overflow flap
	A3 AUX1	=247&EFS/368.5	

6ES7131-4BB01-0AA0
+ TM-E15C24-A1

-E3
&ETC/473.2

ET200S SIEMENS
2 DI DC 24 V ST

E415.4	1 DI0	=247.11&EFS/369.7	247_11_EL_AS
	2 DC24V	=247.11&EFS/369.4	
	3 M	=247.11&EFS/369.4	
	A4 AUX1	=247.11&EFS/369.6	
E415.5	5 DI1	=247.11&EFS/369.7	247_11_EL_GS
	6 DC24V	=247.11&EFS/369.5	
	7 M	=247.11&EFS/369.5	
	A3 AUX1	=247.11&EFS/369.4	

6ES7131-4BB01-0AA0
+ TM-E15C24-A1

-E4
&ETC/473.2

ET200S SIEMENS
2 DI DC 24 V ST

E415.6	1 DI0	=247.12&EFS/370.7	247_12_EL_AS
	2 DC24V	=247.12&EFS/370.5	
	3 M	=247.12&EFS/370.5	-> silo 422
	A4 AUX1	=247.12&EFS/370.7	
E415.7	5 DI1	=247.12&EFS/370.7	247_12_EL_GS
	6 DC24V	=247.12&EFS/370.6	-> silo 421
	7 M	=247.12&EFS/370.7	
	A3 AUX1	=247.12&EFS/370.5	

6ES7131-4BB01-0AA0
+ TM-E15C24-A1

-E5
&ETC/473.2

ET200S SIEMENS
2 DI DC 24 V ST

E416.0	1 DI0	=247.21&EFS/371.7	247_21_EL_AS
	2 DC24V	=247.21&EFS/371.4	
	3 M	=247.21&EFS/371.4	
	A4 AUX1	=247.21&EFS/371.6	
E416.1	5 DI1	=247.21&EFS/371.7	247_21_EL_GS
	6 DC24V	=247.21&EFS/371.5	
	7 M	=247.21&EFS/371.5	
	A3 AUX1	=247.21&EFS/371.4	

6ES7131-4BB01-0AA0
+ TM-E15C24-A1

-E6
&ETC/473.3

ET200S SIEMENS
2 DI DC 24 V ST

E416.2	1 DI0	=247.22&EFS/372.7	247_22_EL_AS
	2 DC24V	=247.22&EFS/372.5	
	3 M	=247.22&EFS/372.5	-> Pos. 247.23
	A4 AUX1	=247.22&EFS/372.7	
E416.3	5 DI1	=247.22&EFS/372.7	247_22_EL_GS
	6 DC24V	=247.22&EFS/372.6	-> silo 431
	7 M	=247.22&EFS/372.7	
	A3 AUX1	=247.22&EFS/372.5	

6ES7131-4BB01-0AA0
+ TM-E15C24-A1

-E7
&ETC/473.3

ET200S SIEMENS
2 DI DC 24 V ST

E416.4	1 DI0	=247.23&EFS/373.7	247_23_EL_AS
	2 DC24V	=247.23&EFS/373.5	
	3 M	=247.23&EFS/373.5	-> Pos. 248
	A4 AUX1	=247.23&EFS/373.7	
E416.5	5 DI1	=247.23&EFS/373.7	247_23_EL_GS
	6 DC24V	=247.23&EFS/373.6	-> silo 432
	7 M	=247.23&EFS/373.7	
	A3 AUX1	=247.23&EFS/373.5	

6ES7131-4BB01-0AA0
+ TM-E15C24-A1

-E8
&ETC/473.3

ET200S SIEMENS
2 DI DC 24 V ST

E416.6	1 DI0	=248&EFS/374.6	248_DZW
	2 DC24V	=248&EFS/374.5	
	3 M	=248&EFS/374.5	
	A4 AUX1	=248&EFS/374.3	
E416.7	5 DI1	=248&EFS/374.6	248_SK
	6 DC24V	=248&EFS/374.3	
	7 M	=248&EFS/374.3	overflow flap
	A3 AUX1	=248&EFS/374.5	

6ES7131-4BB01-0AA0
+ TM-E15C24-A1

			Date	12.12.2019	Mixed feed plant Golden Poultry	BEYTEC ... your gateway to success	overview inputs	= SPS_F7.2
			Ed.	willen				+ F27
			Appr		field 7 external signals		1 : 2	Part II
Modification	Date	Name	Original	V:\EPLAN\Projekte\Company\Replace\Beytec\2018\Feed Mill Alssad.elk		Replaced by		Page 463 / Page 605

-E9
&ETC/473.3

ET200S SIEMENS
2 DI DC 24 V ST

E417.0	1 DI0	=250.1&EFS/376 250.1-B1:6	250_01_01_VM
	2 DC24V	=250.1&EFS/375.4	
	3 M	=250.1&EFS/375.4	
	A4 AUX1	=250.1&EFS/376.4	Rotary sensor 24VDC
E417.1	5 DI1	=250.1&EFS/376 250.1-B1:6	250_01_02_VM
	6 DC24V	=250.1&EFS/376.4	
	7 M	=250.1&EFS/376.4	
	A3 AUX1	=250.1&EFS/375.4	Rotary sensor 24VDC

6ES7131-4BB01-0AA0
+ TM-E15C24-A1

-E10
&ETC/473.3

ET200S SIEMENS
2 DI DC 24 V ST

E417.2	1 DI0	=250.2&EFS/377 250.2-B1:6	250_02_01_LM
	2 DC24V	=250.2&EFS/377.4	
	3 M	=250.2&EFS/377.4	
	A4 AUX1	=250.2&EFS/378.4	Rotary sensor 24VDC
E417.3	5 DI1	=250.2&EFS/378 250.2-B1:6	250_02_02_LM
	6 DC24V	=250.2&EFS/378.4	
	7 M	=250.2&EFS/378.4	
	A3 AUX1	=250.2&EFS/377.4	Rotary sensor 24VDC

6ES7131-4BB01-0AA0
+ TM-E15C24-A1

-E11
&ETC/473.4

ET200S SIEMENS
2 DI DC 24 V ST

E417.4	1 DI0	=250.3&EFS/378 250.3-BG1:BK	250_03_01_EL_AS
	2 DC24V	=250.3&EFS/379.4	
	3 M	=250.3&EFS/379.4	
	A4 AUX1	=250.3&EFS/379.6	
E417.5	5 DI1	=250.3&EFS/378 250.3-BG2:BK	250_03_01_EL_GS
	6 DC24V	=250.3&EFS/379.5	
	7 M	=250.3&EFS/379.5	
	A3 AUX1	=250.3&EFS/379.4	

6ES7131-4BB01-0AA0
+ TM-E15C24-A1

-E12
&ETC/473.4

ET200S SIEMENS
2 DI DC 24 V ST

E417.6	1 DI0	=250.3&EFS/380 250.3-BG3:BK	250_03_02_EL_AS
	2 DC24V	=250.3&EFS/380.4	
	3 M	=250.3&EFS/380.4	
	A4 AUX1	=250.3&EFS/380.6	
E417.7	5 DI1	=250.3&EFS/380 250.3-BG4:BK	250_03_02_EL_GS
	6 DC24V	=250.3&EFS/380.5	
	7 M	=250.3&EFS/380.5	
	A3 AUX1	=250.3&EFS/380.4	

6ES7131-4BB01-0AA0
+ TM-E15C24-A1

-E13
&ETC/473.4

ET200S SIEMENS
2 DI DC 24 V ST

E418.0	1 DI0	=250.5&EFS/384 250.5-B1:6	250_05_LM
	2 DC24V	=250.5&EFS/381.4	
	3 M	=250.5&EFS/381.4	
	A4 AUX1	=350.1&EFS/382.4	Rotary sensor 24VDC
E418.1	5 DI1	=350.1&EFS/382 350.1-B1:6	350_01_01_VM
	6 DC24V	=350.1&EFS/382.4	
	7 M	=350.1&EFS/382.4	
	A3 AUX1	=250.5&EFS/381.4	Rotary sensor 24VDC

6ES7131-4BB01-0AA0
+ TM-E15C24-A1

-E14
&ETC/473.4

ET200S SIEMENS
2 DI DC 24 V ST

E418.2	1 DI0	=350.1&EFS/383 350.1-B1:6	350_01_02_VM
	2 DC24V	=350.1&EFS/383.4	
	3 M	=350.1&EFS/383.4	
	A4 AUX1	=350.2&EFS/384.4	Rotary sensor 24VDC
E418.3	5 DI1	=350.2&EFS/384 350.2-B1:6	350_02_01_LM
	6 DC24V	=350.2&EFS/384.4	
	7 M	=350.2&EFS/384.4	
	A3 AUX1	=350.1&EFS/383.4	Rotary sensor 24VDC

6ES7131-4BB01-0AA0
+ TM-E15C24-A1

-E15
&ETC/473.4

ET200S SIEMENS
2 DI DC 24 V ST

E418.4	1 DI0	=350.2&EFS/385 350.2-B1:6	350_02_02_LM
	2 DC24V	=350.2&EFS/385.4	
	3 M	=350.2&EFS/385.4	
	A4 AUX1	=350.3&EFS/386.4	
E418.5	5 DI1	=350.3&EFS/386 350.3-BG1:BK	350_03_01_EL_AS
	6 DC24V	=350.3&EFS/386.4	
	7 M	=350.3&EFS/386.4	
	A3 AUX1	=350.2&EFS/385.4	Rotary sensor 24VDC

6ES7131-4BB01-0AA0
+ TM-E15C24-A1

-E16
&ETC/473.4

ET200S SIEMENS
2 DI DC 24 V ST

E418.6	1 DI0	=350.3&EFS/386 350.3-BG2:BK	350_03_01_EL_GS
	2 DC24V	=350.3&EFS/386.5	
	3 M	=350.3&EFS/386.5	
	A4 AUX1	=350.3&EFS/387.4	
E418.7	5 DI1	=350.3&EFS/387 350.3-BG3:BK	350_03_02_EL_AS
	6 DC24V	=350.3&EFS/387.4	
	7 M	=350.3&EFS/387.4	
	A3 AUX1	=350.3&EFS/386.6	

6ES7131-4BB01-0AA0
+ TM-E15C24-A1

			Date	12.12.2019	Mixed feed plant Golden Poultry	BEYTEC ... your gateway to success	overview inputs		= SPS_F7.2
			Ed.	willen					+ F27
			Appr		field 7 external signals			1 : 2	Part II
Modification	Date	Name	Original	V:\EPLAN\Projekte\Company\Replace\Beytec\2018\Feed Mill Alssad.elk		Replaced by			Page 464
									Page 605

-E17
&ETC/473.5

ET200S SIEMENS
2 DI DC 24 V ST

E419.0	1 DI0	=350.3&EFS/389.2/350.3-BG4:BK	350_03_02_EL_GS
	2 DC24V	=350.3&EFS/387.5	
	3 M	=350.3&EFS/387.5	
	A4 AUX1	=350.5&EFS/388.4	Rotary sensor 24VDC
E419.1	5 DI1	=350.5&EFS/388.3/350.5-B1:6	350_05_LM
	6 DC24V	=350.5&EFS/388.4	
	7 M	=350.5&EFS/388.4	
	A3 AUX1	=350.3&EFS/387.6	

6ES7131-4BB01-0AA0
+ TM-E15C24-A1

-E18
&ETC/473.5

ET200S SIEMENS
2 DI DC 24 V ST

E419.2	1 DI0	=251&EFS/389.2/251-BG1:4	251_SK
	2 DC24V	=251&EFS/389.3	
	3 M	=251&EFS/389.3	overflow flap
	A4 AUX1	=255&EFS/390.4	Rotary sensor 24VDC
E419.3	5 DI1	=255&EFS/390.4/255-B1:6	255_01_03_VM
	6 DC24V	=255&EFS/390.4	
	7 M	=255&EFS/390.4	
	A3 AUX1	=251&EFS/389.3	

6ES7131-4BB01-0AA0
+ TM-E15C24-A1

-E19
&ETC/473.5

ET200S SIEMENS
2 DI DC 24 V ST

E419.4	1 DI0	=255&EFS/391.4/255-B2:6	255_01_04_NM
	2 DC24V	=255&EFS/391.4	
	3 M	=255&EFS/391.4	
	A4 AUX1	=255&EFS/392.4	Rotary sensor 24VDC
E419.5	5 DI1	=255&EFS/392.4/255-B3:6	255_01_05_MM
	6 DC24V	=255&EFS/392.4	
	7 M	=255&EFS/392.4	
	A3 AUX1	=255&EFS/391.4	Rotary sensor 24VDC

6ES7131-4BB01-0AA0
+ TM-E15C24-A1

-E20
&ETC/473.5

ET200S SIEMENS
2 DI DC 24 V ST

E419.6	1 DI0	=255&EFS/393.6/255-B2:4	255_01_08_EL_GS
	2 DC24V	=255&EFS/393.4	
	3 M	=255&EFS/393.4	limit switch cooler
	A4 AUX1	=257.1&EFS/394.4	Rotary sensor 24VDC
E419.7	5 DI1	=257.1&EFS/394.4/257.1-B1:6	257_01_VM
	6 DC24V	=257.1&EFS/394.4	
	7 M	=257.1&EFS/394.4	
	A3 AUX1	=255&EFS/393.4	

6ES7131-4BB01-0AA0
+ TM-E15C24-A1

-E21
&ETC/473.5

ET200S SIEMENS
2 DI DC 24 V ST

E420.0	1 DI0	=258.1&EFS/396.2/258.1-BG2:BK	258_01_DZW
	2 DC24V	=258.1&EFS/395.5	
	3 M	=258.1&EFS/395.5	
	A4 AUX1	=258.1&EFS/395.3	
E420.1	5 DI1	=258.1&EFS/396.2/258.1-BG1:4	258_01_SK
	6 DC24V	=258.1&EFS/395.3	
	7 M	=258.1&EFS/395.3	overflow flap
	A3 AUX1	=258.1&EFS/395.5	

6ES7131-4BB01-0AA0
+ TM-E15C24-A1

-E22
&ETC/473.6

ET200S SIEMENS
2 DI DC 24 V ST

E420.2	1 DI0	=260&EFS/396.4/260-BG1:BK	260_02_EL_AS
	2 DC24V	=260&EFS/396.5	
	3 M	=260&EFS/396.5	-> feeding screw
	A4 AUX1	=260&EFS/396.7	
E420.3	5 DI1	=260&EFS/396.4/260-BG2:BK	260_02_EL_GS
	6 DC24V	=260&EFS/396.6	-> bypass
	7 M	=260&EFS/396.7	
	A3 AUX1	=260&EFS/396.5	

6ES7131-4BB01-0AA0
+ TM-E15C24-A1

-E23
&ETC/473.6

ET200S SIEMENS
2 DI DC 24 V ST

E420.4	1 DI0	=260.2&EFS/397.2/260.2-S2:14	260_06_EL_MAX
	2 DC24V	=260.2&EFS/397.3	
	3 M	=260.2&EFS/397.3	
	A4 AUX1	=260.2&EFS/397.2	
E420.5	5 DI1	=260.2&EFS/397.2/260.2-S1:14	260_06_EL_MIN
	6 DC24V	=260.2&EFS/397.1	
	7 M	=260.2&EFS/397.1	
	A3 AUX1	=260.2&EFS/397.3	

6ES7131-4BB01-0AA0
+ TM-E15C24-A1

-E24
&ETC/473.6

ET200S SIEMENS
2 DI DC 24 V ST

E420.6	1 DI0	=260.2&EFS/397.4/VK11+VK21-X1:11	260_06_T_AUF
	2 DC24V	=260.2&EFS/397.5	
	3 M	=260.2&EFS/397.5	
	A4 AUX1	=260.2&EFS/397.7	
E420.7	5 DI1	=260.2&EFS/397.4/VK11+VK21-X1:12	260_06_T_ZU
	6 DC24V	=260.2&EFS/397.6	
	7 M	=260.2&EFS/397.7	
	A3 AUX1	=260.2&EFS/397.6	

6ES7131-4BB01-0AA0
+ TM-E15C24-A1

			Date	12.12.2019	Mixed feed plant Golden Poultry	BEYTEC ... your gateway to success	overview inputs	= SPS_F7.2
			Ed.	willen				+ F27
			Appr		field 7 external signals		1 : 2	Part II
Modification	Date	Name	Original	V:\EPLAN\Projekte\Company\Replace\Beytec\2018\Feed Mill Alssad.elk	Replaced by			Page 465 / Page 605

-E25
&ETC/473.6

ET200S SIEMENS
2 DI DC 24 V ST

E421.0	1 DI0	=261&EFS/398.4&261-BG2:BK	261_DZW
	2 DC24V	=261&EFS/398.5	
	3 M	=261&EFS/398.5	
	A4 AUX1	=261&EFS/398.3	
E421.1	5 DI1	=261&EFS/398.4&261-BG1:4	261_SK
	6 DC24V	=261&EFS/398.3	
	7 M	=261&EFS/398.3	overflow flap
	A3 AUX1	=261&EFS/398.5	

6ES7131-4BB01-0AA0
+ TM-E15C24-A1

-E26
&ETC/473.6

ET200S SIEMENS
2 DI DC 24 V ST

E421.2	1 DI0	=262&EFS/399.4&262-BG1:BK	262_DZW
	2 DC24V	=262&EFS/399.4	
	3 M	=262&EFS/399.4	
	A4 AUX1	=262&EFS/400.1	
E421.3	5 DI1	=262&EFS/400.4&262-BG2:2	262_SLO
	6 DC24V	=262&EFS/400.1	
	7 M	=262&EFS/400.1	
	A3 AUX1	=262&EFS/399.4	

6ES7131-4BB01-0AA0
+ TM-E15C24-A1

-E27
&ETC/473.6

ET200S SIEMENS
2 DI DC 24 V ST

E421.4	1 DI0	=262&EFS/400.6&262-BG4:2	262_SLU
	2 DC24V	=262&EFS/400.5	
	3 M	=262&EFS/400.5	
	A4 AUX1	=263&EFS/401.5	
E421.5	5 DI1	=263&EFS/401.4&263-BG1:BK	263_EL_AS
	6 DC24V	=263&EFS/401.5	
	7 M	=263&EFS/401.5	-> Pos. 265
	A3 AUX1	=262&EFS/400.6	

6ES7131-4BB01-0AA0
+ TM-E15C24-A1

-E28
&ETC/473.7

ET200S SIEMENS
2 DI DC 24 V ST

E421.6	1 DI0	=263&EFS/401.6&263-BG2:BK	263_EL_GS
	2 DC24V	=263&EFS/401.6	-> Pos. 264
	3 M	=263&EFS/401.7	
	A4 AUX1	=264&EFS/402.5	
E421.7	5 DI1	=264&EFS/402.4&264-S1:22	264_EL_HUB
	6 DC24V	=264&EFS/402.5	
	7 M	=264&EFS/402.5	
	A3 AUX1	=263&EFS/401.7	

6ES7131-4BB01-0AA0
+ TM-E15C24-A1

-E29
&ETC/473.7

ET200S SIEMENS
2 DI DC 24 V ST

E422.0	1 DI0	=265&EFS/403.4&265-BG2:BK	265_DZW
	2 DC24V	=265&EFS/403.5	
	3 M	=265&EFS/403.5	
	A4 AUX1	=265&EFS/403.3	
E422.1	5 DI1	=265&EFS/403.4&265-BG1:4	265_SK
	6 DC24V	=265&EFS/403.3	
	7 M	=265&EFS/403.3	overflow flap
	A3 AUX1	=265&EFS/403.5	

6ES7131-4BB01-0AA0
+ TM-E15C24-A1

-E30
&ETC/473.7

ET200S SIEMENS
2 DI DC 24 V ST

E422.2	1 DI0	=351&EFS/404.4&351-BG1:4	351_SK
	2 DC24V	=351&EFS/404.3	
	3 M	=351&EFS/404.3	overflow flap
	A4 AUX1	=355&EFS/405.4	Rotary sensor 24VDC
E422.3	5 DI1	=355&EFS/405.4&355-B1:6	355_01_03_VM
	6 DC24V	=355&EFS/405.4	
	7 M	=355&EFS/405.4	
	A3 AUX1	=351&EFS/404.3	

6ES7131-4BB01-0AA0
+ TM-E15C24-A1

-E31
&ETC/473.7

ET200S SIEMENS
2 DI DC 24 V ST

E422.4	1 DI0	=355&EFS/406.4&355-B2:6	355_01_04_NM
	2 DC24V	=355&EFS/406.4	
	3 M	=355&EFS/406.4	
	A4 AUX1	=355&EFS/407.4	Rotary sensor 24VDC
E422.5	5 DI1	=355&EFS/407.4&355-B3:6	355_01_05_MM
	6 DC24V	=355&EFS/407.4	
	7 M	=355&EFS/407.4	
	A3 AUX1	=355&EFS/406.4	Rotary sensor 24VDC

6ES7131-4BB01-0AA0
+ TM-E15C24-A1

-E32
&ETC/473.7

ET200S SIEMENS
2 DI DC 24 V ST

E422.6	1 DI0	=355&EFS/408.4&355-B1:4	355_01_08_EL_GS
	2 DC24V	=355&EFS/408.4	
	3 M	=355&EFS/408.4	limit switch cooler
	A4 AUX1	=357.1&EFS/409.4	Rotary sensor 24VDC
E422.7	5 DI1	=357.1&EFS/409.4&357.1-B1:6	357_01_VM
	6 DC24V	=357.1&EFS/409.4	
	7 M	=357.1&EFS/409.4	
	A3 AUX1	=355&EFS/408.4	

6ES7131-4BB01-0AA0
+ TM-E15C24-A1

			Date	12.12.2019	Mixed feed plant Golden Poultry	BEYTEC ... your gateway to success	overview inputs	= SPS_F7.2
			Ed.	willen				+ F27
			Appr		field 7 external signals		1 : 2	Part II
Modification	Date	Name	Original	V:\EPLAN\Projekte\Company\Replace\Beytec\2018\Feed Mill Alssad.elk		Replaced by		Page 466 / Page 605

-E33
&ETC/473.2

ET200S SIEMENS
2 DI DC 24 V ST

E423.0	1 DI0	=358.1&EFS/410.3	358_01_DZW
	2 DC24V	=358.1&EFS/410.5	
	3 M	=358.1&EFS/410.5	
	A4 AUX1	=358.1&EFS/410.3	
E423.1	5 DI1	=358.1&EFS/410.3	358_01_SK
	6 DC24V	=358.1&EFS/410.3	
	7 M	=358.1&EFS/410.3	overflow flap
	A3 AUX1	=358.1&EFS/410.5	

6ES7131-4BB01-0AA0
+ TM-E15C24-A1

-E34
&ETC/473.2

ET200S SIEMENS
2 DI DC 24 V ST

E423.2	1 DI0	=360&EFS/411.3&360-BG1:BK	360_02_EL_AS
	2 DC24V	=360&EFS/411.5	
	3 M	=360&EFS/411.5	-> feeding screw
	A4 AUX1	=360&EFS/411.7	
E423.3	5 DI1	=360&EFS/411.4&360-BG2:BK	360_02_EL_GS
	6 DC24V	=360&EFS/411.6	-> bypass
	7 M	=360&EFS/411.7	
	A3 AUX1	=360&EFS/411.5	

6ES7131-4BB01-0AA0
+ TM-E15C24-A1

-E35
&ETC/473.2

ET200S SIEMENS
2 DI DC 24 V ST

E423.4	1 DI0	=360.2&EFS/412.3&360.2-S2:14	360_06_EL_MAX
	2 DC24V	=360.2&EFS/412.3	
	3 M	=360.2&EFS/412.3	
	A4 AUX1	=360.2&EFS/412.2	
E423.5	5 DI1	=360.2&EFS/412.1&360.2-S1:14	360_06_EL_MIN
	6 DC24V	=360.2&EFS/412.1	
	7 M	=360.2&EFS/412.1	
	A3 AUX1	=360.2&EFS/412.3	

6ES7131-4BB01-0AA0
+ TM-E15C24-A1

-E36
&ETC/473.3

ET200S SIEMENS
2 DI DC 24 V ST

E423.6	1 DI0	=360.2&EFS/412.2&VK2+VK22-X1:11	360_06_T_AUF
	2 DC24V	=360.2&EFS/412.5	
	3 M	=360.2&EFS/412.5	
	A4 AUX1	=360.2&EFS/412.7	
E423.7	5 DI1	=360.2&EFS/412.6&VK2+VK22-X1:12	360_06_T_ZU
	6 DC24V	=360.2&EFS/412.6	
	7 M	=360.2&EFS/412.7	
	A3 AUX1	=360.2&EFS/412.6	

6ES7131-4BB01-0AA0
+ TM-E15C24-A1

-E37
&ETC/473.3

ET200S SIEMENS
2 DI DC 24 V ST

E424.0	1 DI0	=361&EFS/413.3&361-BG2:BK	361_DZW
	2 DC24V	=361&EFS/413.5	
	3 M	=361&EFS/413.5	
	A4 AUX1	=361&EFS/413.3	
E424.1	5 DI1	=361&EFS/413.3&361-BG1:4	361_SK
	6 DC24V	=361&EFS/413.3	
	7 M	=361&EFS/413.3	overflow flap
	A3 AUX1	=361&EFS/413.5	

6ES7131-4BB01-0AA0
+ TM-E15C24-A1

-E38
&ETC/473.3

ET200S SIEMENS
2 DI DC 24 V ST

E424.2	1 DI0	=362&EFS/414.4&362-BG1:BK	362_DZW
	2 DC24V	=362&EFS/414.4	
	3 M	=362&EFS/414.4	
	A4 AUX1	=362&EFS/415.1	
E424.3	5 DI1	=362&EFS/415.1&362-BG2:2	362_SLO
	6 DC24V	=362&EFS/415.1	
	7 M	=362&EFS/415.1	
	A3 AUX1	=362&EFS/414.4	

6ES7131-4BB01-0AA0
+ TM-E15C24-A1

-E39
&ETC/473.3

ET200S SIEMENS
2 DI DC 24 V ST

E424.4	1 DI0	=362&EFS/415.4&362-BG4:2	362_SLU
	2 DC24V	=362&EFS/415.5	
	3 M	=362&EFS/415.5	
	A4 AUX1	=363&EFS/416.5	
E424.5	5 DI1	=363&EFS/416.4&363-BG1:BK	363_EL_AS
	6 DC24V	=363&EFS/416.5	
	7 M	=363&EFS/416.5	-> Pos. 365
	A3 AUX1	=362&EFS/415.6	

6ES7131-4BB01-0AA0
+ TM-E15C24-A1

-E40
&ETC/473.3

ET200S SIEMENS
2 DI DC 24 V ST

E424.6	1 DI0	=363&EFS/416.6&363-BG2:BK	363_EL_GS
	2 DC24V	=363&EFS/416.6	-> Pos. 364
	3 M	=363&EFS/416.7	
	A4 AUX1	=364&EFS/417.5	
E424.7	5 DI1	=364&EFS/417.6&364-S1:22	364_EL_HUB
	6 DC24V	=364&EFS/417.5	
	7 M	=364&EFS/417.5	
	A3 AUX1	=363&EFS/416.7	

6ES7131-4BB01-0AA0
+ TM-E15C24-A1

			Date	12.12.2019	Mixed feed plant Golden Poultry	BEYTEC ... your gateway to success	overview inputs		= SPS_F7.2
			Ed.	willen					+ F27
			Appr		field 7 external signals			1 : 2	Part II
Modification	Date	Name	Original	V:\EPLAN\Projekte\Company\Replace\Beytec\2018\Feed Mill Alssad.elk		Replaced by			Page 467 / Page 605

-E41
&ETC/473.4

ET200S SIEMENS
2 DI DC 24 V ST

E425.0	1 DI0	=365&EFS/418.6&365-BG2:BK	365_DZW
	2 DC24V	=365&EFS/418.5	
	3 M	=365&EFS/418.5	
	A4 AUX1	=365&EFS/418.3	
E425.1	5 DI1	=365&EFS/418.8&365-BG1:4	365_SK
	6 DC24V	=365&EFS/418.3	
	7 M	=365&EFS/418.3	overflow flap
	A3 AUX1	=365&EFS/418.5	

6ES7131-4BB01-0AA0
+ TM-E15C24-A1

-E42
&ETC/473.4

ET200S SIEMENS
2 DI DC 24 V ST

E425.2	1 DI0	=266&EFS/419.6&266-BG2:BK	266_DZW
	2 DC24V	=266&EFS/419.5	
	3 M	=266&EFS/419.5	
	A4 AUX1	=266&EFS/419.3	
E425.3	5 DI1	=266&EFS/419.8&266-BG1:4	266_SK
	6 DC24V	=266&EFS/419.3	
	7 M	=266&EFS/419.3	overflow flap
	A3 AUX1	=266&EFS/419.5	

6ES7131-4BB01-0AA0
+ TM-E15C24-A1

-E43
&ETC/473.4

ET200S SIEMENS
2 DI DC 24 V ST

E425.4	1 DI0	=267&EFS/420.6&267-BG2:BK	267_DZW
	2 DC24V	=267&EFS/420.5	
	3 M	=267&EFS/420.5	
	A4 AUX1	=267&EFS/420.3	
E425.5	5 DI1	=267&EFS/420.8&267-BG1:4	267_SK
	6 DC24V	=267&EFS/420.3	
	7 M	=267&EFS/420.3	overflow flap
	A3 AUX1	=267&EFS/420.5	

6ES7131-4BB01-0AA0
+ TM-E15C24-A1

-E44
&ETC/473.4

ET200S SIEMENS
2 DI DC 24 V ST

E425.6	1 DI0	=268.1&EFS/424.6&268.1-B1:6	268_01_01_VM
	2 DC24V	=268.1&EFS/421.4	
	3 M	=268.1&EFS/421.4	
	A4 AUX1	=268.1&EFS/422.4	Rotary sensor 24VDC
E425.7	5 DI1	=268.1&EFS/422.8&268.1-B1:6	268_01_02_VM
	6 DC24V	=268.1&EFS/422.4	
	7 M	=268.1&EFS/422.4	
	A3 AUX1	=268.1&EFS/421.4	Rotary sensor 24VDC

6ES7131-4BB01-0AA0
+ TM-E15C24-A1

-E45
&ETC/473.4

ET200S SIEMENS
2 DI DC 24 V ST

E426.0	1 DI0	=268.1&EFS/426.6&268.1-B1:6	268_01_03_VM
	2 DC24V	=268.1&EFS/423.4	
	3 M	=268.1&EFS/423.4	
	A4 AUX1	=268.1&EFS/424.4	Rotary sensor 24VDC
E426.1	5 DI1	=268.1&EFS/426.8&268.1-B1:6	268_01_04_VM
	6 DC24V	=268.1&EFS/424.4	
	7 M	=268.1&EFS/424.4	
	A3 AUX1	=268.1&EFS/423.4	Rotary sensor 24VDC

6ES7131-4BB01-0AA0
+ TM-E15C24-A1

-E46
&ETC/473.4

ET200S SIEMENS
2 DI DC 24 V ST

E426.2	1 DI0	=268.1&EFS/426.6&268.1-B1:6	268_01_05_VM
	2 DC24V	=268.1&EFS/425.4	
	3 M	=268.1&EFS/425.4	
	A4 AUX1	=268.1&EFS/426.4	Rotary sensor 24VDC
E426.3	5 DI1	=268.1&EFS/426.8&268.1-B1:6	268_01_06_VM
	6 DC24V	=268.1&EFS/426.4	
	7 M	=268.1&EFS/426.4	
	A3 AUX1	=268.1&EFS/425.4	Rotary sensor 24VDC

6ES7131-4BB01-0AA0
+ TM-E15C24-A1

-E47
&ETC/473.5

ET200S SIEMENS
2 DI DC 24 V ST

E426.4	1 DI0	=268.1&EFS/430.6&268.1-B1:6	268_01_07_VM
	2 DC24V	=268.1&EFS/427.4	
	3 M	=268.1&EFS/427.4	
	A4 AUX1	=268.1&EFS/428.4	Rotary sensor 24VDC
E426.5	5 DI1	=268.1&EFS/430.8&268.1-B1:6	268_01_08_VM
	6 DC24V	=268.1&EFS/428.4	
	7 M	=268.1&EFS/428.4	
	A3 AUX1	=268.1&EFS/427.4	Rotary sensor 24VDC

6ES7131-4BB01-0AA0
+ TM-E15C24-A1

-E48
&ETC/473.5

ET200S SIEMENS
2 DI DC 24 V ST

E426.6	1 DI0	=268.2&EFS/430.6&268.2-B1:6	268_02_01_LM
	2 DC24V	=268.2&EFS/429.4	
	3 M	=268.2&EFS/429.4	
	A4 AUX1	=268.2&EFS/430.4	Rotary sensor 24VDC
E426.7	5 DI1	=268.2&EFS/430.8&268.2-B1:6	268_02_02_LM
	6 DC24V	=268.2&EFS/430.4	
	7 M	=268.2&EFS/430.4	
	A3 AUX1	=268.2&EFS/429.4	Rotary sensor 24VDC

6ES7131-4BB01-0AA0
+ TM-E15C24-A1

			Date	12.12.2019	Mixed feed plant Golden Poultry	BEYTEC ... your gateway to success	overview inputs		= SPS_F7.2
			Ed.	willen					+ F27
			Appr		field 7 external signals			1 : 2	Part II
Modification	Date	Name	Original	V:\EPLAN\Projekte\Company\Alpharetta\Beytec\2018\Feed Mill Alssad.elk		Replaced by			Page 468 / Page 605

-E49
&ETC/473.5

ET200S SIEMENS
2 DI DC 24 V ST

E427.0	1 DI0	=268.2&EFS/431=268.2-B1:6	268_02_03_LM
	2 DC24V	=268.2&EFS/431.4	
	3 M	=268.2&EFS/431.4	
	A4 AUX1	=268.2&EFS/432.4	Rotary sensor 24VDC
E427.1	5 DI1	=268.2&EFS/432=268.2-B1:6	268_02_04_LM
	6 DC24V	=268.2&EFS/432.4	
	7 M	=268.2&EFS/432.4	
	A3 AUX1	=268.2&EFS/431.4	Rotary sensor 24VDC

6ES7131-4BB01-0AA0
+ TM-E15C24-A1

-E50
&ETC/473.5

ET200S SIEMENS
2 DI DC 24 V ST

E427.2	1 DI0	=268.2&EFS/433=268.2-B1:6	268_02_05_LM
	2 DC24V	=268.2&EFS/433.4	
	3 M	=268.2&EFS/433.4	
	A4 AUX1	=268.2&EFS/434.4	Rotary sensor 24VDC
E427.3	5 DI1	=268.2&EFS/434=268.2-B1:6	268_02_06_LM
	6 DC24V	=268.2&EFS/434.4	
	7 M	=268.2&EFS/434.4	
	A3 AUX1	=268.2&EFS/433.4	Rotary sensor 24VDC

6ES7131-4BB01-0AA0
+ TM-E15C24-A1

-E51
&ETC/473.5

ET200S SIEMENS
2 DI DC 24 V ST

E427.4	1 DI0	=268.2&EFS/435=268.2-B1:6	268_02_07_LM
	2 DC24V	=268.2&EFS/435.4	
	3 M	=268.2&EFS/435.4	
	A4 AUX1	=268.2&EFS/436.4	Rotary sensor 24VDC
E427.5	5 DI1	=268.2&EFS/436=268.2-B1:6	268_02_08_LM
	6 DC24V	=268.2&EFS/436.4	
	7 M	=268.2&EFS/436.4	
	A3 AUX1	=268.2&EFS/435.4	Rotary sensor 24VDC

6ES7131-4BB01-0AA0
+ TM-E15C24-A1

-E52
&ETC/473.6

ET200S SIEMENS
2 DI DC 24 V ST

E427.6	1 DI0	=269&EFS/437=269-U1-S1:.4	269_01_01_T_AUF
	2 DC24V	=269&EFS/437.2	open
	3 M	=269&EFS/437.3	
	A4 AUX1	=269&EFS/437.4	
E427.7	5 DI1	=269&EFS/437=269-U1-S2:.4	269_01_01_T_ZU
	6 DC24V	=269&EFS/437.4	
	7 M	=269&EFS/437.4	
	A3 AUX1	=269&EFS/437.3	

6ES7131-4BB01-0AA0
+ TM-E15C24-A1

-E53
&ETC/473.6

ET200S SIEMENS
2 DI DC 24 V ST

E428.0	1 DI0	=269&EFS/438=269-U2-S1:.4	269_02_01_T_AUF
	2 DC24V	=269&EFS/438.2	open
	3 M	=269&EFS/438.3	
	A4 AUX1	=269&EFS/438.4	
E428.1	5 DI1	=269&EFS/438=269-U2-S2:.4	269_02_01_T_ZU
	6 DC24V	=269&EFS/438.4	
	7 M	=269&EFS/438.4	
	A3 AUX1	=269&EFS/438.3	

6ES7131-4BB01-0AA0
+ TM-E15C24-A1

-E54
&ETC/473.6

ET200S SIEMENS
2 DI DC 24 V ST

E428.2	1 DI0	=269&EFS/439=269-U3-S1:.4	269_03_01_T_AUF
	2 DC24V	=269&EFS/439.2	open
	3 M	=269&EFS/439.3	
	A4 AUX1	=269&EFS/439.4	
E428.3	5 DI1	=269&EFS/439=269-U3-S2:.4	269_03_01_T_ZU
	6 DC24V	=269&EFS/439.4	
	7 M	=269&EFS/439.4	
	A3 AUX1	=269&EFS/439.3	

6ES7131-4BB01-0AA0
+ TM-E15C24-A1

-E55
&ETC/473.6

ET200S SIEMENS
2 DI DC 24 V ST

E428.4	1 DI0	=269&EFS/440=269-U4-S1:.4	269_04_01_T_AUF
	2 DC24V	=269&EFS/440.2	open
	3 M	=269&EFS/440.3	
	A4 AUX1	=269&EFS/440.4	
E428.5	5 DI1	=269&EFS/440=269-U4-S2:.4	269_04_01_T_ZU
	6 DC24V	=269&EFS/440.4	
	7 M	=269&EFS/440.4	
	A3 AUX1	=269&EFS/440.3	

6ES7131-4BB01-0AA0
+ TM-E15C24-A1

-E56
&ETC/473.6

ET200S SIEMENS
2 DI DC 24 V ST

E428.6	1 DI0	=269&EFS/441=269-U5-S1:.4	269_05_01_T_AUF
	2 DC24V	=269&EFS/441.2	open
	3 M	=269&EFS/441.3	
	A4 AUX1	=269&EFS/441.4	
E428.7	5 DI1	=269&EFS/441=269-U5-S2:.4	269_05_01_T_ZU
	6 DC24V	=269&EFS/441.4	
	7 M	=269&EFS/441.4	
	A3 AUX1	=269&EFS/441.3	

6ES7131-4BB01-0AA0
+ TM-E15C24-A1

			Date	12.12.2019	Mixed feed plant Golden Poultry	BEYTEC ... your gateway to success	overview inputs		= SPS_F7.2
			Ed.	willen					+ F27
			Appr		field 7 external signals			1 : 2	Part II
Modification	Date	Name	Original	V:\EPLAN\Projekte\Company\Replace\Beytec\2018\Feed Mill Alssad.elk		Replaced by			Page 469 / Page 605

-E57
&ETC/473.6

ET200S SIEMENS
2 DI DC 24 V ST

E429.0	1 DI0	=269&EFS/442:iD269-U6-S1::4	269_06_01_T_AUF
	2 DC24V	=269&EFS/442.2	open
	3 M	=269&EFS/442.3	
	A4 AUX1	=269&EFS/442.4	
E429.1	5 DI1	=269&EFS/442:xD269-U6-S2::4	269_06_01_T_ZU
	6 DC24V	=269&EFS/442.4	
	7 M	=269&EFS/442.4	
	A3 AUX1	=269&EFS/442.3	

6ES7131-4BB01-0AA0
+ TM-E15C24-A1

-E58
&ETC/473.7

ET200S SIEMENS
2 DI DC 24 V ST

E429.2	1 DI0	=269&EFS/443:iD269-U7-S1::4	269_07_01_T_AUF
	2 DC24V	=269&EFS/443.2	open
	3 M	=269&EFS/443.3	
	A4 AUX1	=269&EFS/443.4	
E429.3	5 DI1	=269&EFS/443:xD269-U7-S2::4	269_07_01_T_ZU
	6 DC24V	=269&EFS/443.4	
	7 M	=269&EFS/443.4	
	A3 AUX1	=269&EFS/443.3	

6ES7131-4BB01-0AA0
+ TM-E15C24-A1

-E59
&ETC/473.7

ET200S SIEMENS
2 DI DC 24 V ST

E429.4	1 DI0	=269&EFS/444:iD269-U8-S1::4	269_08_01_T_AUF
	2 DC24V	=269&EFS/444.2	open
	3 M	=269&EFS/444.3	
	A4 AUX1	=269&EFS/444.4	
E429.5	5 DI1	=269&EFS/444:xD269-U8-S2::4	269_08_01_T_ZU
	6 DC24V	=269&EFS/444.4	
	7 M	=269&EFS/444.4	
	A3 AUX1	=269&EFS/444.3	

6ES7131-4BB01-0AA0
+ TM-E15C24-A1

-E60
&ETC/473.7

ET200S SIEMENS
2 DI DC 24 V ST

E429.6	1 DI0	=280&EFS/445:iD280-BG2:BK	280_DZW
	2 DC24V	=280&EFS/445.5	
	3 M	=280&EFS/445.5	
	A4 AUX1	=280&EFS/445.3	
E429.7	5 DI1	=280&EFS/445:xD280-BG1:4	280_SK
	6 DC24V	=280&EFS/445.3	
	7 M	=280&EFS/445.3	overflow flap
	A3 AUX1	=280&EFS/445.5	

6ES7131-4BB01-0AA0
+ TM-E15C24-A1

			Date	12.12.2019	Mixed feed plant Golden Poultry	BEYTEC ... your gateway to success	overview inputs
			Ed.	willen			
			Appr		field 7 external signals		
Modification	Date	Name	Original	V:\EPLAN\Projekte\Company\Replace\Beytec\2018\Feed Mill Alssad.elk	Replaced by		

= SPS_F7.2
+ F27
1 : 2 Part II Page 470 Page 605

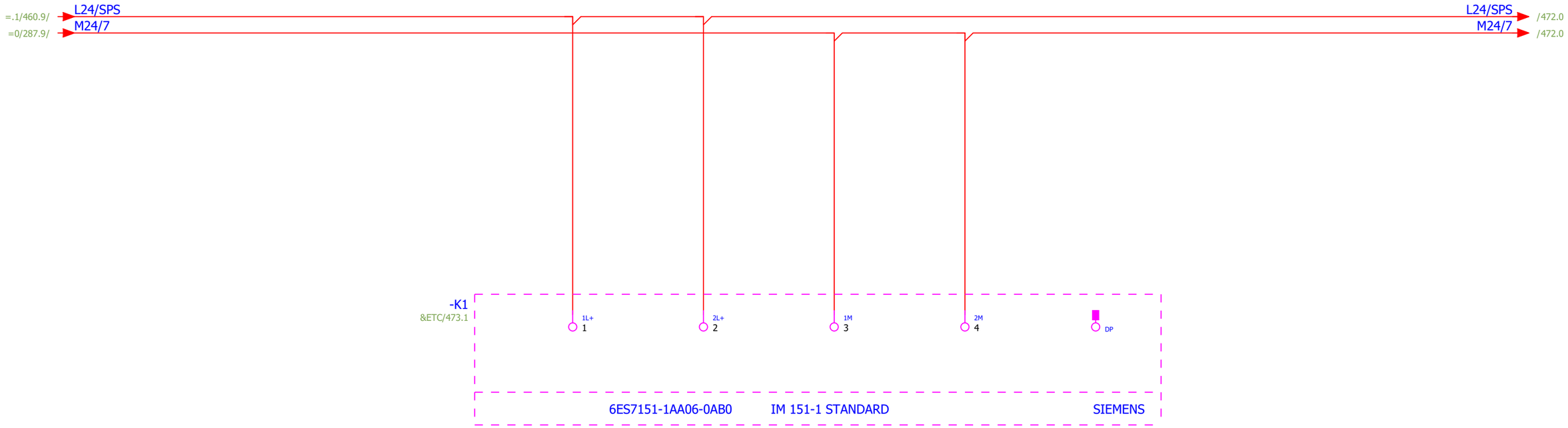
=.1/460.9/
L24/SPS
M24/7
=0/287.9/
L24/SPS
M24/7
/472.0
/472.0
-K1
&ETC/473.1
1L+
1
2L+
2
1M
3
2M
4
DP
6ES7151-1AA06-0AB0
IM 151-1 STANDARD
SIEMENS

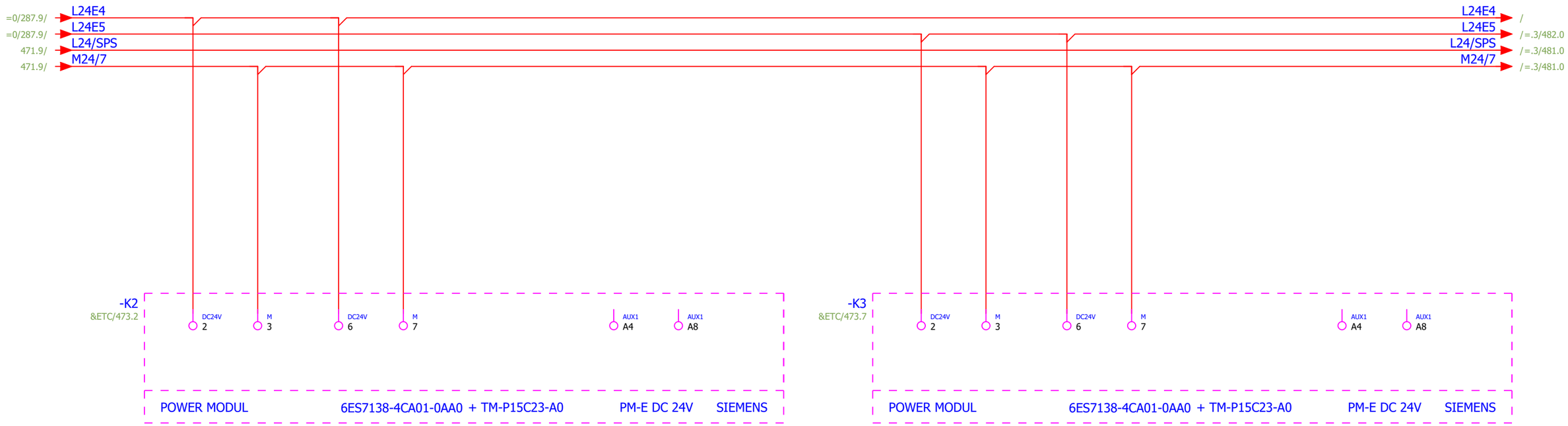
=0/287.9/
L24E4
=0/287.9/
L24E5
471.9/
L24/SPS
471.9/
M24/7
L24E4
/
L24E5
/=.3/482.0
L24/SPS
/=.3/481.0
M24/7
/=.3/481.0
-K2
&ETC/473.2
DC24V
2
M
3
DC24V
6
M
7
AUX1
A4
AUX1
A8
POWER MODUL
6ES7138-4CA01-0AA0 + TM-P15C23-A0
PM-E DC 24V
SIEMENS
-K3
&ETC/473.7
DC24V
2
M
3
DC24V
6
M
7
AUX1
A4
AUX1
A8
POWER MODUL
6ES7138-4CA01-0AA0 + TM-P15C23-A0
PM-E DC 24V
SIEMENS

-K1
&EFS/471.3
SIEMENS
IM 151-1
STANDARD
SF
BF
ON
X1
PROFIBUS-DP
ET 200S
DC24V
L1+
1M
2L+
2M
X20
DP
ADDRESS
OFF
ON
6ES7 151-
1AA06-0AB0
-K2
&EFS/472.1
-E1
-E2
-E3
-E4
-E5
-E6
-E7
-E8
-E9
-E10
-E11
-E12
-E13
-E14
-E15
-E16
-E17
-E18
-E19
-E20
-E21
-E22
-E23
-E24
-E25
-E26
-E27
-E28
-E29
-E30
-E31
-E32
-K3
&EFS/472.5
PM-E
DC 24V
2 DI
DC 24 V ST
6ES7138-
4CA01-0AA0
6ES7131-
4BB01-0AA0
AUX1

-E33
-E34
-E35
-E36
-E37
-E38
-E39
-E40
-E41
-E42
-E43
-E44
-E45
-E46
-E47
-E48
-E49
-E50
-E51
-E52
-E53
-E54
-E55
-E56
-E57
-E58
-E59
-E60
2 DI
DC 24 V ST
6ES7131-
4BB01-0AA0

-E1
&ETC/484.2

ET200S SIEMENS
2 DI DC 24 V ST

E430.0	1 DI0	=281&EFS/446.6&281-BG2:BK	281_DZW
	2 DC24V	=281&EFS/446.5	
	3 M	=281&EFS/446.5	
	A4 AUX1	=281&EFS/446.3	
E430.1	5 DI1	=281&EFS/446.6&281-BG1:4	281_SK
	6 DC24V	=281&EFS/446.3	
	7 M	=281&EFS/446.3	overflow flap
	A3 AUX1	=281&EFS/446.5	

6ES7131-4BB01-0AA0
+ TM-E15C24-A1

-E2
&ETC/484.2

ET200S SIEMENS
2 DI DC 24 V ST

E430.2	1 DI0	=282&EFS/447.6&282-BG2:BK	282_DZW
	2 DC24V	=282&EFS/447.5	
	3 M	=282&EFS/447.5	
	A4 AUX1	=282&EFS/447.3	
E430.3	5 DI1	=282&EFS/447.6&282-BG1:4	282_SK
	6 DC24V	=282&EFS/447.3	
	7 M	=282&EFS/447.3	overflow flap
	A3 AUX1	=282&EFS/447.5	

6ES7131-4BB01-0AA0
+ TM-E15C24-A1

-E3
&ETC/484.2

ET200S SIEMENS
2 DI DC 24 V ST

E430.4	1 DI0	=283.1&EFS/446.6&283.1-B1:6	283_VM
	2 DC24V	=283.1&EFS/448.4	
	3 M	=283.1&EFS/448.4	
	A4 AUX1	=283.1&EFS/449.8	
E430.5	5 DI1	=283.1&EFS/446.6&283.1-U1-S3:.4	283_T_Schnellstop
	6 DC24V	=283.1&EFS/449.7	
	7 M	=283.1&EFS/449.7	
	A3 AUX1	=283.1&EFS/448.4	Rotary sensor 24VDC

6ES7131-4BB01-0AA0
+ TM-E15C24-A1

-E4
&ETC/484.2

ET200S SIEMENS
2 DI DC 24 V ST

E430.6	1 DI0	=283.1&EFS/446.6&283.1-U1-S1:.4	283_T_START
	2 DC24V	=283.1&EFS/449.2	Start
	3 M	=283.1&EFS/449.3	
	A4 AUX1	=283.1&EFS/449.5	
E430.7	5 DI1	=283.1&EFS/446.6&283.1-U1-S2:.4	283_T_Stop
	6 DC24V		
	7 M		
	A3 AUX1	=283.1&EFS/449.3	

6ES7131-4BB01-0AA0
+ TM-E15C24-A1

-E5
&ETC/484.2

ET200S SIEMENS
2 DI DC 24 V ST

E431.0	1 DI0	Spare
	2 DC24V	
	3 M	
	A4 AUX1	
E431.1	5 DI1	Spare
	6 DC24V	
	7 M	
	A3 AUX1	

6ES7131-4BB01-0AA0
+ TM-E15C24-A1

-E6
&ETC/484.3

ET200S SIEMENS
2 DI DC 24 V ST

E431.2	1 DI0	Spare
	2 DC24V	
	3 M	
	A4 AUX1	
E431.3	5 DI1	Spare
	6 DC24V	
	7 M	
	A3 AUX1	

6ES7131-4BB01-0AA0
+ TM-E15C24-A1

-E7
&ETC/484.3

ET200S SIEMENS
2 DI DC 24 V ST

E431.4	1 DI0	Spare
	2 DC24V	
	3 M	
	A4 AUX1	
E431.5	5 DI1	Spare
	6 DC24V	
	7 M	
	A3 AUX1	

6ES7131-4BB01-0AA0
+ TM-E15C24-A1

-E8
&ETC/484.3

ET200S SIEMENS
2 DI DC 24 V ST

E431.6	1 DI0	Spare
	2 DC24V	
	3 M	
	A4 AUX1	
E431.7	5 DI1	Spare
	6 DC24V	
	7 M	
	A3 AUX1	

6ES7131-4BB01-0AA0
+ TM-E15C24-A1

			Date	12.12.2019	Mixed feed plant Golden Poultry	BEYTEC ... your gateway to success	overview inputs
			Ed.	willen	field 7 external signals		
			Appr				
Modification	Date	Name	Original	V:\EPLAN\Projekte\Company\Replace\Beytec\2018\Feed Mill Alssad.elk	Replaced by		

= SPS_F7.3		
+ F27		
1 : 2	Part II	Page 474
		Page 605

-E9
&BTC/484.3

ET200S SIEMENS
2 DI DC 24 V ST

E432.0 1 DI0 2 DC24V 3 M A4 AUX1 — Spare

E432.1 5 DI1 6 DC24V 7 M A3 AUX1 — Spare

6ES7131-4BB01-0AA0
+ TM-E15C24-A1

-E10
&BTC/484.3

ET200S SIEMENS
2 DI DC 24 V ST

E432.2 1 DI0 2 DC24V 3 M A4 AUX1 — Spare

E432.3 5 DI1 6 DC24V 7 M A3 AUX1 — Spare

6ES7131-4BB01-0AA0
+ TM-E15C24-A1

-E11
&BTC/484.3

ET200S SIEMENS
2 DI DC 24 V ST

E432.4 1 DI0 2 DC24V 3 M A4 AUX1 — Spare

E432.5 5 DI1 6 DC24V 7 M A3 AUX1 — Spare

6ES7131-4BB01-0AA0
+ TM-E15C24-A1

-E12
&BTC/484.4

ET200S SIEMENS
2 DI DC 24 V ST

E432.6 1 DI0 2 DC24V 3 M A4 AUX1 — Spare

E432.7 5 DI1 6 DC24V 7 M A3 AUX1 — Spare

6ES7131-4BB01-0AA0
+ TM-E15C24-A1

			Date	12.12.2019	Mixed feed plant Golden Poultry	BEYTEC ... your gateway to success	overview inputs		= SPS_F7.3	
			Ed.	willen					+ F27	
			Appr		field 7 external signals			1 : 2	Part II	Page 475
Modification	Date	Name	Original	V:\EPLAN\Projekte\Company\Replace\Beytec\2018\Feed Mill Alssad.elk	Replaced by					Page 605

-A1
&ETC/484.4

ET200S SIEMENS
2 DO DC24V/0,5A ST

A400.0	1 DO0	=205.1&EFS/323.3	205_01_A_AS
	2 DC24V	=205.1&EFS/323.3	
	3 M	=205.1&EFS/323.3	
	A4 AUX1	=205.1&EFS/323.4	
A400.1	5 DO1	=205.1&EFS/323.4	205_01_A_GS
	6 DC24V	=205.1&EFS/323.4	
	7 M	=205.1&EFS/323.4	
	A3 AUX1	=205.1&EFS/323.3	

6ES7132-4BB01-0AA0
+ TM-E15C24-A1

-A2
&ETC/484.4

ET200S SIEMENS
2 DO DC24V/0,5A ST

A400.2	1 DO0	=206.2.1&EFS/325.3	206_02_01_A_AS
	2 DC24V	=206.2.1&EFS/325.3	
	3 M	=206.2.1&EFS/325.3	
	A4 AUX1	=206.2.2&EFS/326.3	
A400.3	5 DO1	=206.2.2&EFS/326.3	206_02_02_A_AS
	6 DC24V	=206.2.2&EFS/326.3	
	7 M	=206.2.2&EFS/326.3	
	A3 AUX1	=206.2.1&EFS/325.3	

6ES7132-4BB01-0AA0
+ TM-E15C24-A1

-A3
&ETC/484.4

ET200S SIEMENS
2 DO DC24V/0,5A ST

A400.4	1 DO0	=221&EFS/333.4 =221-U1-S1:X1	221_A_Start_Leuchte
	2 DC24V	=221&EFS/333.4	
	3 M	=221&EFS/333.4	Fast stop
	A4 AUX1	=221&EFS/333.6	
A400.5	5 DO1	=221&EFS/333.4 =221-U1-S2:X1	221_A_Stop_Leuchte
	6 DC24V	=221&EFS/333.6	
	7 M	=221&EFS/333.6	
	A3 AUX1	=221&EFS/333.4	

6ES7132-4BB01-0AA0
+ TM-E15C24-A1

-A4
&ETC/484.4

ET200S SIEMENS
2 DO DC24V/0,5A ST

A400.6	1 DO0	=223.1&EFS/337.3	223_01_A_AS
	2 DC24V	=223.1&EFS/337.3	
	3 M	=223.1&EFS/337.3	
	A4 AUX1	=223.1&EFS/337.4	
A400.7	5 DO1	=223.1&EFS/337.4	223_01_A_GS
	6 DC24V	=223.1&EFS/337.4	
	7 M	=223.1&EFS/337.4	
	A3 AUX1	=223.1&EFS/337.3	

6ES7132-4BB01-0AA0
+ TM-E15C24-A1

-A5
&ETC/484.5

ET200S SIEMENS
2 DO DC24V/0,5A ST

A401.0	1 DO0	=223.2&EFS/338.3	223_02_A_AS
	2 DC24V	=223.2&EFS/338.3	
	3 M	=223.2&EFS/338.3	
	A4 AUX1	=223.2&EFS/338.4	
A401.1	5 DO1	=223.2&EFS/338.4	223_02_A_GS
	6 DC24V	=223.2&EFS/338.4	
	7 M	=223.2&EFS/338.4	
	A3 AUX1	=223.2&EFS/338.3	

6ES7132-4BB01-0AA0
+ TM-E15C24-A1

-A6
&ETC/484.5

ET200S SIEMENS
2 DO DC24V/0,5A ST

A401.2	1 DO0	=223.3&EFS/339.3	223_03_A_AS
	2 DC24V	=223.3&EFS/339.3	
	3 M	=223.3&EFS/339.3	
	A4 AUX1	=223.3&EFS/339.4	
A401.3	5 DO1	=223.3&EFS/339.4	223_03_A_GS
	6 DC24V	=223.3&EFS/339.4	
	7 M	=223.3&EFS/339.4	
	A3 AUX1	=223.3&EFS/339.3	

6ES7132-4BB01-0AA0
+ TM-E15C24-A1

-A7
&ETC/484.5

ET200S SIEMENS
2 DO DC24V/0,5A ST

A401.4	1 DO0	=223.4&EFS/340.3	223_04_A_AS
	2 DC24V	=223.4&EFS/340.3	
	3 M	=223.4&EFS/340.3	
	A4 AUX1	=223.4&EFS/340.4	
A401.5	5 DO1	=223.4&EFS/340.4	223_04_A_GS
	6 DC24V	=223.4&EFS/340.4	
	7 M	=223.4&EFS/340.4	
	A3 AUX1	=223.4&EFS/340.3	

6ES7132-4BB01-0AA0
+ TM-E15C24-A1

-A8
&ETC/484.5

ET200S SIEMENS
2 DO DC24V/0,5A ST

A401.6	1 DO0	=228&EFS/351.3	228_A_AS
	2 DC24V	=228&EFS/351.3	
	3 M	=228&EFS/351.3	
	A4 AUX1	=228&EFS/351.4	
A401.7	5 DO1	=228&EFS/351.4	228_A_GS
	6 DC24V	=228&EFS/351.4	
	7 M	=228&EFS/351.4	
	A3 AUX1	=228&EFS/351.3	

6ES7132-4BB01-0AA0
+ TM-E15C24-A1

			Date	12.12.2019	Mixed feed plant Golden Poultry	BEYTEC ... your gateway to success	overview outputs	= SPS_F7.3
			Ed.	willen				+ F27
			Appr		field 7 external signals		1 : 2	Part II
Modification	Date	Name	Original	V:\EPLAN\Projekte\Company\Replace\Beytec\2018\Feed Mill Alssad.elk	Replaced by			Page 476 / Page 605

-A9
&ETC/484.5

ET200S SIEMENS
2 DO DC24V/0,5A ST

A402.0	DO0	=229&EFS/352:1	229_A_AS
	DC24V	=229&EFS/352.3	
	M	=229&EFS/352.3	
	AUX1	=229&EFS/352.4	
A402.1	DO1	=229&EFS/352:4	229_A_GS
	DC24V	=229&EFS/352.4	
	M	=229&EFS/352.4	
	AUX1	=229&EFS/352.3	

6ES7132-4BB01-0AA0
+ TM-E15C24-A1

-A10
&ETC/484.6

ET200S SIEMENS
2 DO DC24V/0,5A ST

A402.2	DO0	=230&EFS/353:6230-S1:X1	230_A_Leuchte_HZ
	DC24V	=230&EFS/353.6	
	M	=230&EFS/353.5	
	AUX1	=230.1&EFS/354.3	
A402.3	DO1	=230.1&EFS/354.3	230_01_A_AS
	DC24V	=230.1&EFS/354.3	
	M	=230.1&EFS/354.3	
	AUX1	=230&EFS/353.6	

6ES7132-4BB01-0AA0
+ TM-E15C24-A1

-A11
&ETC/484.6

ET200S SIEMENS
2 DO DC24V/0,5A ST

A402.4	DO0	=230.1&EFS/354:4	230_01_A_GS
	DC24V	=230.1&EFS/354.4	
	M	=230.1&EFS/354.4	
	AUX1	=241&EFS/356.3	
A402.5	DO1	=241&EFS/356:3	241_A_AS
	DC24V	=241&EFS/356.3	
	M	=241&EFS/356.3	
	AUX1	=230.1&EFS/354.4	

6ES7132-4BB01-0AA0
+ TM-E15C24-A1

-A12
&ETC/484.6

ET200S SIEMENS
2 DO DC24V/0,5A ST

A402.6	DO0	=242&EFS/358:8	242_01_A_Bearing
	DC24V	=242&EFS/358.8	
	M	=242&EFS/358.8	
	AUX1	=242&EFS/358.6	
A402.7	DO1	=242&EFS/358:5	242_02_A_lock_door_AS
	DC24V	=242&EFS/358.6	
	M	=242&EFS/358.5	
	AUX1	=242&EFS/358.8	

6ES7132-4BB01-0AA0
+ TM-E15C24-A1

-A13
&ETC/484.6

ET200S SIEMENS
2 DO DC24V/0,5A ST

A403.0	DO0	=242&EFS/358:6	242_02_A_lock_door_GS
	DC24V	=242&EFS/358.7	
	M	=242&EFS/358.7	
	AUX1	=242&EFS/358.1	
A403.1	DO1	=242&EFS/358:1	242_03_A_door_A_AS
	DC24V	=242&EFS/358.1	
	M	=242&EFS/358.1	
	AUX1	=242&EFS/358.7	

6ES7132-4BB01-0AA0
+ TM-E15C24-A1

-A14
&ETC/484.6

ET200S SIEMENS
2 DO DC24V/0,5A ST

A403.2	DO0	=242&EFS/358:2	242_03_A_door_A_GS
	DC24V	=242&EFS/358.2	
	M	=242&EFS/358.2	
	AUX1	=242&EFS/358.4	
A403.3	DO1	=242&EFS/358:3	242_04_A_door_B_AS
	DC24V	=242&EFS/358.3	
	M	=242&EFS/358.3	
	AUX1	=242&EFS/358.2	

6ES7132-4BB01-0AA0
+ TM-E15C24-A1

-A15
&ETC/484.6

ET200S SIEMENS
2 DO DC24V/0,5A ST

A403.4	DO0	=242&EFS/358:4	242_04_A_door_B_GS
	DC24V	=242&EFS/358.4	
	M	=242&EFS/358.4	
	AUX1	=243&EFS/362.3	
A403.5	DO1	=243&EFS/362:3	243_02_A_AS
	DC24V	=243&EFS/362.3	
	M	=243&EFS/362.3	
	AUX1	=242&EFS/358.5	

6ES7132-4BB01-0AA0
+ TM-E15C24-A1

-A16
&ETC/484.7

ET200S SIEMENS
2 DO DC24V/0,5A ST

A403.6	DO0	=243&EFS/363:4	243_03_A_AS
	DC24V	=243&EFS/363.4	
	M	=243&EFS/363.4	
	AUX1	=247.11&EFS/369.3	
A403.7	DO1	=247.11&EFS/369.3	247_11_A_AS
	DC24V	=247.11&EFS/369.3	
	M	=247.11&EFS/369.3	
	AUX1	=243&EFS/363.5	

6ES7132-4BB01-0AA0
+ TM-E15C24-A1

			Date	12.12.2019	Mixed feed plant Golden Poultry	BEYTEC ... your gateway to success	overview outputs
			Ed.	willen			
			Appr		field 7 external signals		
Modification	Date	Name	Original	V:\EPLAN\Projekte\Company\Replace\Beytec\2018\Feed Mill Alssad.elk	Replaced by		

= SPS_F7.3
+ F27
1 : 2 | Part II | Page 477 | Page 605

-A17
&ETC/484.2

ET200S SIEMENS
2 DO DC24V/0,5A ST

A404.0	1 DO0	=247.12&EFS/310.3	247_12_A_AS
	2 DC24V	=247.12&EFS/370.3	
	3 M	=247.12&EFS/370.3	
	A4 AUX1	=247.12&EFS/370.4	
A404.1	5 DO1	=247.12&EFS/310.4	247_12_A_GS
	6 DC24V	=247.12&EFS/370.4	
	7 M	=247.12&EFS/370.4	
	A3 AUX1	=247.12&EFS/370.3	

6ES7132-4BB01-0AA0
+ TM-E15C24-A1

-A18
&ETC/484.2

ET200S SIEMENS
2 DO DC24V/0,5A ST

A404.2	1 DO0	=247.21&EFS/311.3	247_21_A_AS
	2 DC24V	=247.21&EFS/371.3	
	3 M	=247.21&EFS/371.3	
	A4 AUX1	=247.22&EFS/372.3	
A404.3	5 DO1	=247.22&EFS/312.3	247_22_A_AS
	6 DC24V	=247.22&EFS/372.3	
	7 M	=247.22&EFS/372.3	
	A3 AUX1	=247.21&EFS/371.3	

6ES7132-4BB01-0AA0
+ TM-E15C24-A1

-A19
&ETC/484.2

ET200S SIEMENS
2 DO DC24V/0,5A ST

A404.4	1 DO0	=247.22&EFS/312.4	247_22_A_GS
	2 DC24V	=247.22&EFS/372.4	
	3 M	=247.22&EFS/372.4	
	A4 AUX1	=247.23&EFS/373.3	
A404.5	5 DO1	=247.23&EFS/313.3	247_23_A_AS
	6 DC24V	=247.23&EFS/373.3	
	7 M	=247.23&EFS/373.3	
	A3 AUX1	=247.22&EFS/372.4	

6ES7132-4BB01-0AA0
+ TM-E15C24-A1

-A20
&ETC/484.3

ET200S SIEMENS
2 DO DC24V/0,5A ST

A404.6	1 DO0	=247.23&EFS/313.4	247_23_A_GS
	2 DC24V	=247.23&EFS/373.4	
	3 M	=247.23&EFS/373.4	
	A4 AUX1	=250.38&EFS/379.3	
A404.7	5 DO1	=250.38&EFS/379.3	250_03_01_A_AS
	6 DC24V	=250.38&EFS/379.3	
	7 M	=250.38&EFS/379.3	
	A3 AUX1	=247.23&EFS/373.4	

6ES7132-4BB01-0AA0
+ TM-E15C24-A1

-A21
&ETC/484.3

ET200S SIEMENS
2 DO DC24V/0,5A ST

A405.0	1 DO0	=250.38&EFS/380.3	250_03_02_A_AS
	2 DC24V	=250.38&EFS/380.3	
	3 M	=250.38&EFS/380.3	
	A4 AUX1	=350.38&EFS/386.3	
A405.1	5 DO1	=350.38&EFS/386.3	350_03_01_A_AS
	6 DC24V	=350.38&EFS/386.3	
	7 M	=350.38&EFS/386.3	
	A3 AUX1	=250.38&EFS/380.3	

6ES7132-4BB01-0AA0
+ TM-E15C24-A1

-A22
&ETC/484.3

ET200S SIEMENS
2 DO DC24V/0,5A ST

A405.2	1 DO0	=350.38&EFS/387.3	350_03_02_A_AS
	2 DC24V	=350.38&EFS/387.3	
	3 M	=350.38&EFS/387.3	
	A4 AUX1	=260&EFS/396.3	
A405.3	5 DO1	=260&EFS/396.3	260_02_A_AS
	6 DC24V	=260&EFS/396.3	
	7 M	=260&EFS/396.3	
	A3 AUX1	=350.38&EFS/387.3	

6ES7132-4BB01-0AA0
+ TM-E15C24-A1

-A23
&ETC/484.3

ET200S SIEMENS
2 DO DC24V/0,5A ST

A405.4	1 DO0	=260&EFS/396.4	260_02_A_GS
	2 DC24V	=260&EFS/396.4	
	3 M	=260&EFS/396.4	
	A4 AUX1	=263&EFS/401.3	
A405.5	5 DO1	=263&EFS/401.3	263_A_AS
	6 DC24V	=263&EFS/401.3	
	7 M	=263&EFS/401.3	
	A3 AUX1	=260&EFS/396.4	

6ES7132-4BB01-0AA0
+ TM-E15C24-A1

-A24
&ETC/484.3

ET200S SIEMENS
2 DO DC24V/0,5A ST

A405.6	1 DO0	=263&EFS/401.4	263_A_GS
	2 DC24V	=263&EFS/401.4	
	3 M	=263&EFS/401.4	
	A4 AUX1	=360&EFS/411.3	
A405.7	5 DO1	=360&EFS/411.3	360_02_A_AS
	6 DC24V	=360&EFS/411.3	
	7 M	=360&EFS/411.3	
	A3 AUX1	=263&EFS/401.4	

6ES7132-4BB01-0AA0
+ TM-E15C24-A1

			Date	12.12.2019	Mixed feed plant Golden Poultry	BEYTEC ... your gateway to success	overview outputs	= SPS_F7.3
			Ed.	willen				+ F27
			Appr		field 7 external signals		1 : 2	Part II
Modification	Date	Name	Original	V:\EPLAN\Projekte\Company\Replace\Beytec\2018\Feed Mill Alssad.elk		Replaced by		Page 478 / Page 605

-A25
&ETC/484.3

ET200S SIEMENS
2 DO DC24V/0,5A ST

A406.0	1 DO0	=360&EFS/411.4	360_02_A_GS
	2 DC24V	=360&EFS/411.4	
	3 M	=360&EFS/411.4	
	A4 AUX1	=363&EFS/416.3	
A406.1	5 DO1	=363&EFS/416.3	363_A_AS
	6 DC24V	=363&EFS/416.3	
	7 M	=363&EFS/416.3	
	A3 AUX1	=360&EFS/411.4	

6ES7132-4BB01-0AA0
+ TM-E15C24-A1

-A26
&ETC/484.4

ET200S SIEMENS
2 DO DC24V/0,5A ST

A406.2	1 DO0	=363&EFS/416.4	363_A_GS
	2 DC24V	=363&EFS/416.4	
	3 M	=363&EFS/416.4	
	A4 AUX1	=269&EFS/437.5	
A406.3	5 DO1	=269&EFS/437.5&269-U1-S1:X1	269_01_01_A_Leuchte
	6 DC24V	=269&EFS/437.5	
	7 M	=269&EFS/437.5	
	A3 AUX1	=363&EFS/416.4	

6ES7132-4BB01-0AA0
+ TM-E15C24-A1

-A27
&ETC/484.4

ET200S SIEMENS
2 DO DC24V/0,5A ST

A406.4	1 DO0	=269&EFS/438.5&269-U2-S1:X1	269_02_01_A_Leuchte
	2 DC24V	=269&EFS/438.5	
	3 M	=269&EFS/438.5	
	A4 AUX1	=269&EFS/439.5	
A406.5	5 DO1	=269&EFS/439.5&269-U3-S1:X1	269_03_01_A_Leuchte
	6 DC24V	=269&EFS/439.5	
	7 M	=269&EFS/439.5	
	A3 AUX1	=269&EFS/438.5	

6ES7132-4BB01-0AA0
+ TM-E15C24-A1

-A28
&ETC/484.4

ET200S SIEMENS
2 DO DC24V/0,5A ST

A406.6	1 DO0	=269&EFS/440.5&269-U4-S1:X1	269_04_01_A_Leuchte
	2 DC24V	=269&EFS/440.5	
	3 M	=269&EFS/440.5	
	A4 AUX1	=269&EFS/441.5	
A406.7	5 DO1	=269&EFS/441.5&269-U5-S1:X1	269_05_01_A_Leuchte
	6 DC24V	=269&EFS/441.5	
	7 M	=269&EFS/441.5	
	A3 AUX1	=269&EFS/440.5	

6ES7132-4BB01-0AA0
+ TM-E15C24-A1

-A29
&ETC/484.4

ET200S SIEMENS
2 DO DC24V/0,5A ST

A407.0	1 DO0	=269&EFS/442.5&269-U6-S1:X1	269_06_01_A_Leuchte
	2 DC24V	=269&EFS/442.5	
	3 M	=269&EFS/442.5	
	A4 AUX1	=269&EFS/443.5	
A407.1	5 DO1	=269&EFS/443.5&269-U7-S1:X1	269_07_01_A_Leuchte
	6 DC24V	=269&EFS/443.5	
	7 M	=269&EFS/443.5	
	A3 AUX1	=269&EFS/442.5	

6ES7132-4BB01-0AA0
+ TM-E15C24-A1

-A30
&ETC/484.4

ET200S SIEMENS
2 DO DC24V/0,5A ST

A407.2	1 DO0	=269&EFS/444.5&269-U8-S1:X1	269_08_01_A_Leuchte
	2 DC24V	=269&EFS/444.5	
	3 M	=269&EFS/444.5	
	A4 AUX1	=283.1&EFS/449.4	
A407.3	5 DO1	=283.1&EFS/449.4&283.1-U1-S1:X1	283_A_Start_Leuchte
	6 DC24V	=283.1&EFS/449.5 =283.1&EFS/449.4	
	7 M	=283.1&EFS/449.5 =283.1&EFS/449.4	
	A3 AUX1	=269&EFS/444.5	

6ES7132-4BB01-0AA0
+ TM-E15C24-A1

-A31
&ETC/484.4

ET200S SIEMENS
2 DO DC24V/0,5A ST

A407.4	1 DO0	=283.1&EFS/449.6&283.1-U1-S2:X1	283_A_Stop_Leuchte
	2 DC24V	=283.1&EFS/449.6	
	3 M	=283.1&EFS/449.6	
	A4 AUX1		
A407.5	5 DO1		Spare
	6 DC24V		
	7 M		
	A3 AUX1	=283.1&EFS/449.6	

6ES7132-4BB01-0AA0
+ TM-E15C24-A1

-A32
&ETC/484.5

ET200S SIEMENS
2 DO DC24V/0,5A ST

A407.6	1 DO0		Spare
	2 DC24V		
	3 M		
	A4 AUX1		
A407.7	5 DO1		Spare
	6 DC24V		
	7 M		
	A3 AUX1		

6ES7132-4BB01-0AA0
+ TM-E15C24-A1

			Date	12.12.2019	Mixed feed plant Golden Poultry	BEYTEC ... your gateway to success	overview outputs	= SPS_F7.3
			Ed.	willen				+ F27
			Appr		field 7 external signals		1 : 2	Part II
Modification	Date	Name	Original	V:\EPLAN\Projekte\Company\Beytec\2018\Feed Mill Alssad.elk	Replaced by			Page 479
								Page 605

-A33
&EFS/484.5

ET200S SIEMENS
2 DO DC24V/0,5A ST

A408.0 1 DO0 2 DC24V 3 M — Spare
A4 AUX1

A408.1 5 DO1 6 DC24V 7 M — Spare
A3 AUX1

6ES7132-4BB01-0AA0
+ TM-E15C24-A1

-A34
&EFS/484.5

ET200S SIEMENS
2 DO DC24V/0,5A ST

A408.2 1 DO0 2 DC24V 3 M — Spare
A4 AUX1

A408.3 5 DO1 6 DC24V 7 M — Spare
A3 AUX1

6ES7132-4BB01-0AA0
+ TM-E15C24-A1

-A35
&EFS/484.5

ET200S SIEMENS
2 DO DC24V/0,5A ST

A408.4 1 DO0 2 DC24V 3 M — Spare
A4 AUX1

A408.5 5 DO1 6 DC24V 7 M — Spare
A3 AUX1

6ES7132-4BB01-0AA0
+ TM-E15C24-A1

-A36
&EFS/484.5

ET200S SIEMENS
2 DO DC24V/0,5A ST

A408.6 1 DO0 2 DC24V 3 M — Spare
A4 AUX1

A408.7 5 DO1 6 DC24V 7 M — Spare
A3 AUX1

6ES7132-4BB01-0AA0
+ TM-E15C24-A1

			Date	12.12.2019	Mixed feed plant Golden Poultry	BEYTEC ... your gateway to success	overview outputs	= SPS_F7.3
			Ed.	willen				+ F27
			Appr		field 7 external signals		1 : 2	Part II — Page 480
Modification	Date	Name	Original	V:\EPLAN\Projekte\Company\Replace\Beytec\2018\Feed Mill Alssad.elk	Replaced by			Page 605

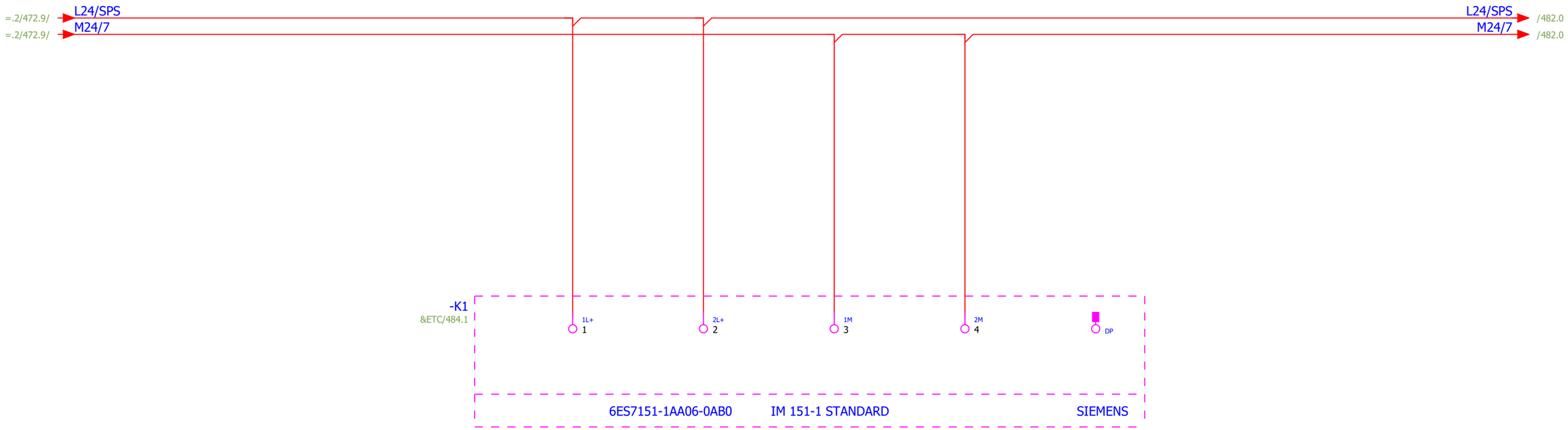
=.2/472.9/
L24/SPS
=.2/472.9/
M24/7
L24/SPS
/482.0
M24/7
/482.0
-K1
&ETC/484.1
1L+
1
2L+
2
1M
3
2M
4
DP
6ES7151-1AA06-0AB0
IM 151-1 STANDARD
SIEMENS

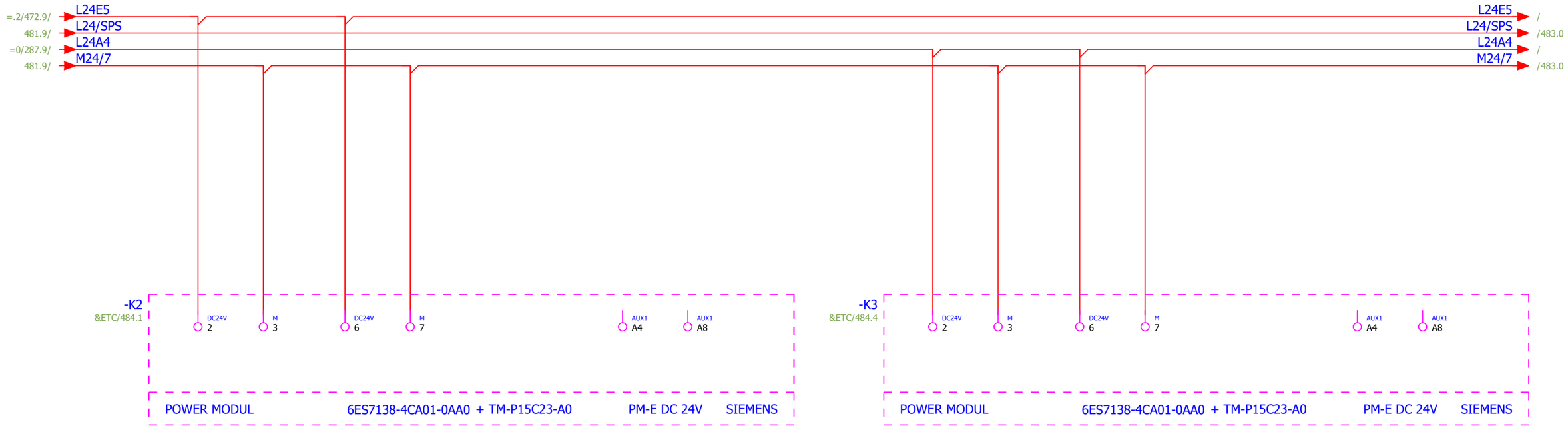

			Date	12.12.2019	Mixed feed plant Golden Poultry	BEYTEC ... your gateway to success	PLC power supply power module		= SPS_F7.3
			Ed.	willen					+ F27
			Appr		field 7 external signals			1 : 1	Part II
Modification	Date	Name	Original	V:\EPLAN\Projekte\Company\Replace\Beytec\2018\Feed Mill Alssad.elk	Replaced by				Page 482
									Page 605

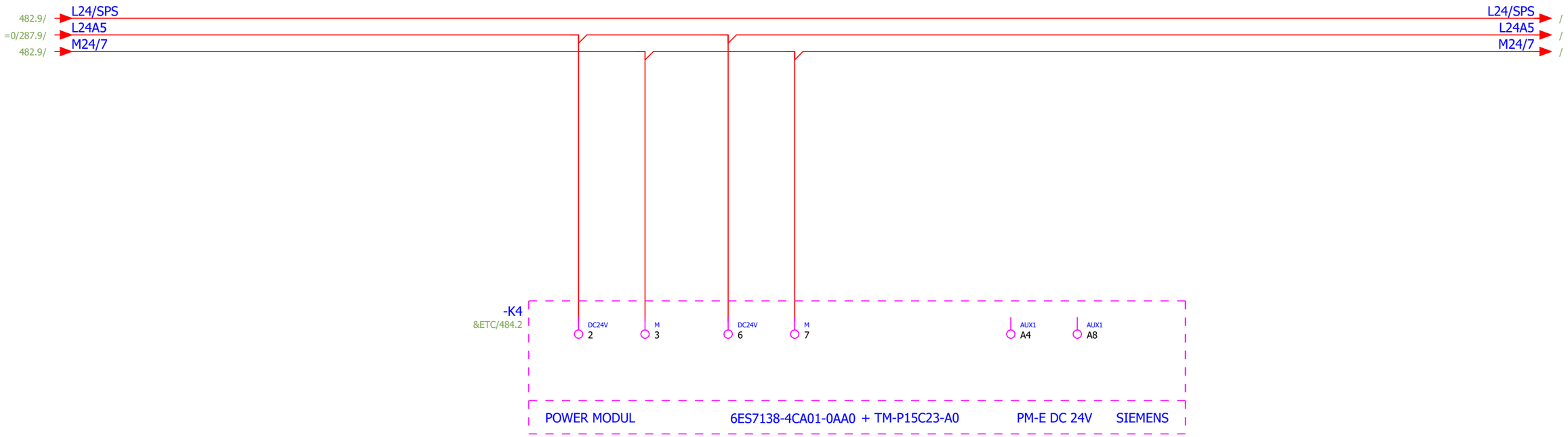

			Date	12.12.2019	Mixed feed plant Golden Poultry	BEYTEC ... your gateway to success	PLC power supply power module		= SPS_F7.3	
			Ed.	willen					+ F27	
			Appr		field 7 external signals			1 : 1	Part II	Page 483
Modification	Date	Name	Original	V:\EPLAN\Projekte\Company\Replace\Beytec\2018\Feed Mill Alssad.elk	Replaced by					Page 605

Replace(Beytec)

-K1
&EFS/481.3
SIEMENS
IM 151-1
STANDARD
SF
BF
ON
X1
PROFIBUS-DP
ET 200S
DC24V
1L+ 1M
2L+ 2M
X20
DP
ADDRESS
OFF ON
6ES7 151-
1AA06-0AB0
-K2
&EFS/482.1
-K3
&EFS/482.5
-K4
&EFS/483.3
PM-E
DC 24V
2 DI
DC 24 V ST
2 DO DC24V
0,5A ST
6ES7138-
4CA01-0AA0
6ES7131-
4BB01-0AA0
6ES7132-
4BB01-0AA0
AUX1
PWR

BEYTEC

... your gateway to success

Company / customer	BeyTec
Project description	Golden Poultry
Job number	Part II
Mounting location	Scale 3

Technical data:

Operating voltage	400 V
Operating frequency	50 Hz
Operating current	
Power network	
Control voltage	24VDC
Protection class electrical	SK I
Degree of protection	IP54
Responsible for project	Willen

Created on	21.10.2019		
Edit date	12.12.2019	by (short name) willen	Number of pages 605

Table of contents

Column X: An automatically generated page was edited

F06_001_EN

Page	Page description	supplementary page field	Date	Edited by	X
++A1+WAG3&BAA/485	Title page / cover sheet		12.12.2019	willen	X
++A1+WAG3&BAB/486	Table of contents : ++A1+WAG3&BAA/485 - =227++A1+WAG3&EFS/489		12.12.2019	willen	
++A1+WAG3&BPA/487	Summarized parts list : WAC.PAXS - WAC.PAXS		12.12.2019	willen	X
++A1+WAG3&ETL1/488	Panel layout		12.12.2019	willen	
=227++A1+WAG3&EFS/489	Dosing scale 3		12.12.2019	willen	

Summarized parts list

F02_002_en_US

Order number	Quantity	Designation	Type number	Supplier
	2	Digitalanzeige für Dehnungsmeßstreifen PAXS	PAXS001 0/B: 1	Wachendorff

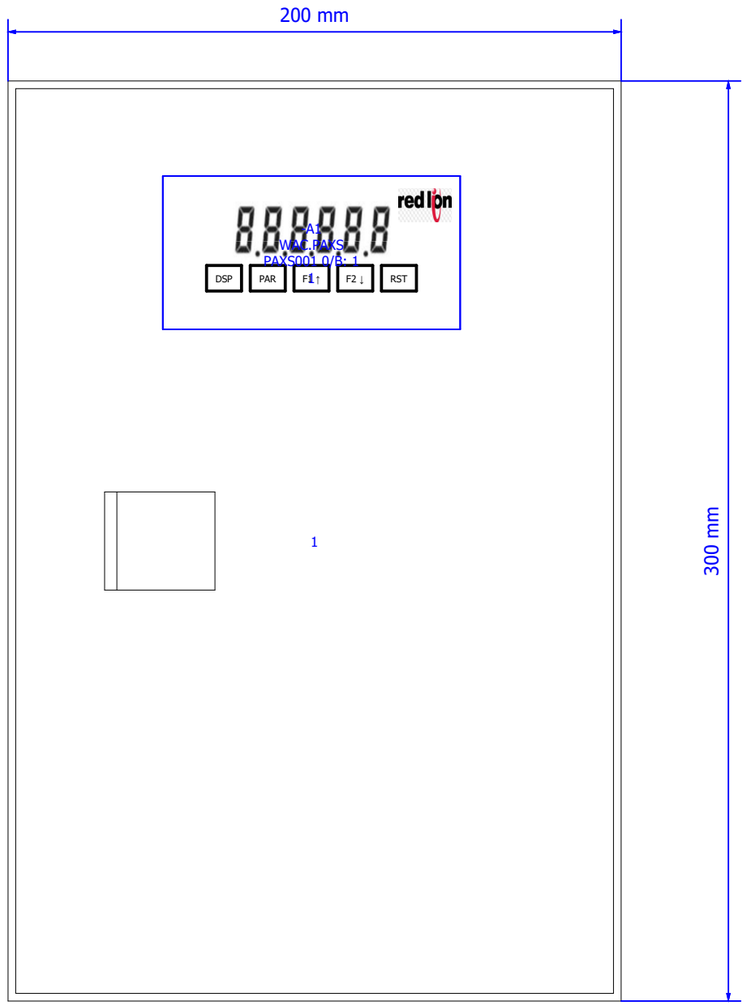
200 mm
300 mm
red lion
DSP
PAR
F1 ↑
F2 ↓
RST
1

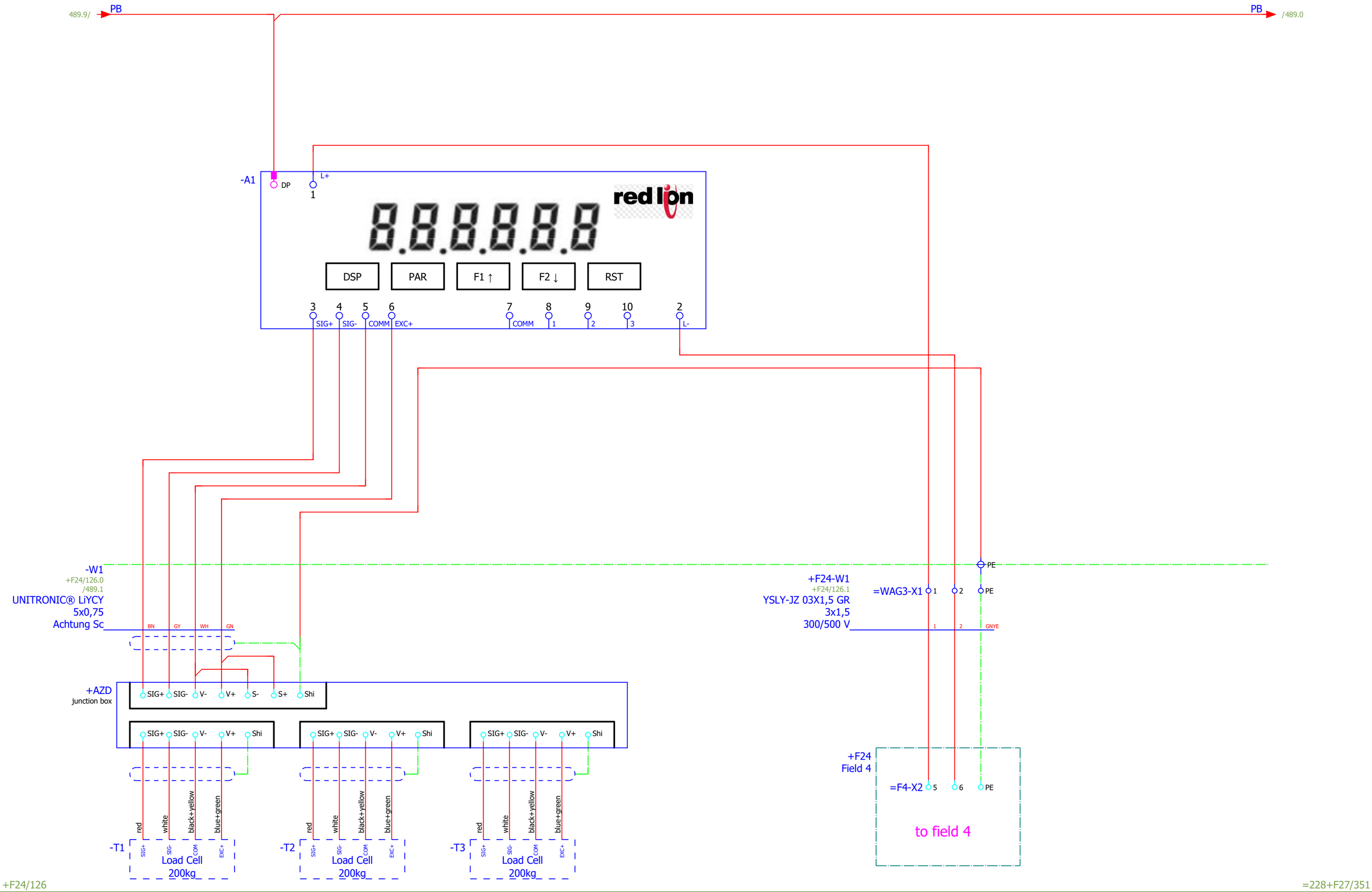
489.9/
PB
PB
/489.0
-A1
DP
L+
1
red lion
DSP
PAR
F1 ↑
F2 ↓
RST
3 SIG+
4 SIG-
5 COMM
6 EXC+
7 COMM
8 1
9 2
10 3
2 L-
-W1
+F24/126.0
/489.1
UNITRONIC® LiYCY
5x0,75
Achtung Sc
BN
GY
WH
GN
PE
+F24-W1
+F24/126.1
YSLY-JZ 03X1,5 GR
3x1,5
300/500 V
=WAG3-X1
1
2
PE
1
2
GNYE
+AZD
junction box
SIG+
SIG-
V-
V+
S-
S+
Shi
red
white
black+yellow
blue+green
-T1
-T2
-T3
SIG+
SIG-
COM
EXC+
Load Cell
200kg
+F24
Field 4
=F4-X2
5
6
PE
to field 4

BEYTEC

... your gateway to success

Company / customer	BeyTec
Project description	Golden Poultry
Job number	Part II
Mounting location	Hammer mill

Technical data:

Operating voltage	400 V
Operating frequency	50 Hz
Operating current	
Power network	
Control voltage	24VDC
Protection class electrical	SK I
Degree of protection	IP54
Responsible for project	Willen

Created on 21.10.2019

Edit date 12.12.2019 by (short name) willen

Number of pages 605

Table of contents

Column X: An automatically generated page was edited

F06_001_EN

Page	Page description	supplementary page field	Date	Edited by	X
++A3+HM2&BAA/490	Title page / cover sheet		12.12.2019	willen	X
++A3+HM2&BAB/491	Table of contents : ++A3+HM2&BAA/490 - =SPS_HM++A3+HM2&ETC/512		12.12.2019	willen	
++A3+HM2&BPA/492	Summarized parts list : ABB.1SVR730824R9300 - SIE.6ES7134-4FB01-0AB0+TM-E15C24-01		12.12.2019	willen	X
++A3+HM2&BPA/493	Summarized parts list : SIE.6ES7134-4JB51-0AB0+TM-E15C24-01 - SIE.6ES7134-4JB51-0AB0+TM-E15C24-01		12.12.2019	willen	X
++A3+HM2&ETL1/494	Panel layout		12.12.2019	willen	
=GB1++A3+HM2&EFS/495	Power supply		12.12.2019	willen	
=GB1++A3+HM2&EFS/496	Power supply		12.12.2019	willen	
=E01++A3+HM2&EFS/497	Control cabinet lighting		12.12.2019	willen	
=HM++A3+HM2&EFS/498	emergency stop HM		12.12.2019	willen	
=HM++A3+HM2&EFS/499	load circuit hammermill		12.12.2019	willen	
=HM++A3+HM2&EFS/500	control circuit hammermill		12.12.2019	willen	
=HM++A3+HM2&EFS/501	hammermill door right		12.12.2019	willen	
=HM++A3+HM2&EFS/502	hammermill door left		12.12.2019	willen	
=HM++A3+HM2&EFS/503	overview bearing temperature		12.12.2019	willen	
=HM++A3+HM2&EFS/504	Auswertung Mahlkammer Temperatur		12.12.2019	willen	
=SPS_HM++A3+HM2&EFA1/505	overview bus coupler and power module		12.12.2019	willen	
=SPS_HM++A3+HM2&EFA1/506	overview inputs		12.12.2019	willen	
=SPS_HM++A3+HM2&EFA1/507	overview analog inputs		12.12.2019	willen	
=SPS_HM++A3+HM2&EFA1/508	overview analog inputs		12.12.2019	willen	
=SPS_HM++A3+HM2&EFA1/509	overview outputs		12.12.2019	willen	
=SPS_HM++A3+HM2&EFS/510	PLC power supply bus coupler		12.12.2019	willen	
=SPS_HM++A3+HM2&EFS/511	PLC power supply power module		12.12.2019	willen	
=SPS_HM++A3+HM2&ETC/512	PLC overview field HM		12.12.2019	willen	

Summarized parts list

F02_002_en_US

Order number	Quantity	Designation	Type number	Supplier
1SVR730824R9300	1	CM-PFS.S Three-phase monitoring relay	CM-PFS.S	
09916109	1	LS-Schalter B6A / 3pol	DLS6iB06-3	DOEPKE
284468	1	Circuit-breaker, 3p, 450A	NZMN3-ME450	ETN
216376	1	Contact element, 1N/O, front mount, 6. contact, screw connection	M22-K10	EATON
216378	1	Contact element, 1 N/C, front mount, 6. contact, screw connection	M22-K01	EATON
2702226	1	LED enclosure light	PLD E 608 W 315/F	PXC
	0			
216535	2	Aufbaugehäuse einfach M22-I1	M22-I1	EATON
216380	2	Contact element, 1N/O, base fixing, 6. contact, screw connection	M22-KC10	EATON
216562	2	LED element, green, base fixing, 12-30VAC/DC	M22-LEDC-G	EATON
216927	2	Illuminated pushbutton actuator, flush, green, momentary	M22-DL-G	EATON
216392	2	Schildträger	M22S-ST-X	EATON
PT100.VGS	2	PT100 Temperaturmeßfühler	PT100.VGS	WIK
TS325A	2	Temperature sensor for connection to evaluation units	TS-300KEKD06...../3M/3D/3G	IFM
T221761	1	MS220K, PTC-resistor trip device, AC/DC24V	MS220K	ZIEHL
274199	2	Contactor, 3p+2N/O+2N/C, 250kW/400V/AC3	DILM500-S/22(220-240V50/60HZ)	ETN
139559	1	Contactor, 3p+2N/O+2N/C, 160kW/400V/AC3	DILM300A-S/22(220-240V50/60HZ)	ETN
139537	1	Contactor, 3p+2N/O+2N/C, 90kW/400V/AC3	DILM185A/22(RAC240)	ETN
83.82.0.240.0000	1	Modular timer, Star-delta (SD) - AC (50/60 Hz)/DC - 24...240 V	83.82.0.240.0000	FINDER
2903334	2	relay module 24DC/2X21	RIF-1-RPT-LDP-24DC/2X21	PHOENIX
2904954	1	Safety relays	PSR-MS40-1NO-1DO-24DC-SC	PXC
2277653	1	Current transformer	PACT MCR-V2-3015- 60- 500-5A-1	PXC
2814359	1	Current transducers	MCR-SLP-1-5-UI-0	PHOENIX
6ES7132-4BF00-0AA0 / 6ES7193-4CB30-0AA0	1	8DO, 24V DC, 0.5A / TM-E15C24-01	6ES7132-4BF00-0AA0 / 6ES7193-4CB30-0AA0	SIE
6ES7131-4BF00-0AA0 / 6ES7193-4CB30-0AA0	2	8DI, 24V DC / TM-E15C24-01	6ES7131-4BF00-0AA0 / 6ES7193-4CB30-0AA0	SIE
6ES7151-1AA06-0AB0	1	ET200S, IM151-1 STD, 12MBIT/S	6ES7151-1AA06-0AB0	SIE
6ES7138-4CA01-0AA0 / 6ES7193-4CD30-0AA0	2	PM-E, DC 24V / TM-P15C23-A0	6ES7138-4CA01-0AA0 / 6ES7193-4CD30-0AA0	SIE
6ES7134-4FB01-0AB0 / 6ES7193-4CB30-0AA0	1	2AI STD U, +/-10V, 1-5V / TM-E15C24-01	6ES7134-4FB01-0AB0 / 6ES7193-4CB30-0AA0	SIE

Summarized parts list

F02_002_en_US

Order number	Quantity	Designation	Type number	Supplier
6ES7134-4JB51-0AB0 / 6ES7193-4CB30-0AA0	2	2/4AI RTD ST, 15BIT / TM-E15C24-01	6ES7134-4JB51-0AB0 / 6ES7193-4CB30-0AA0	SIE

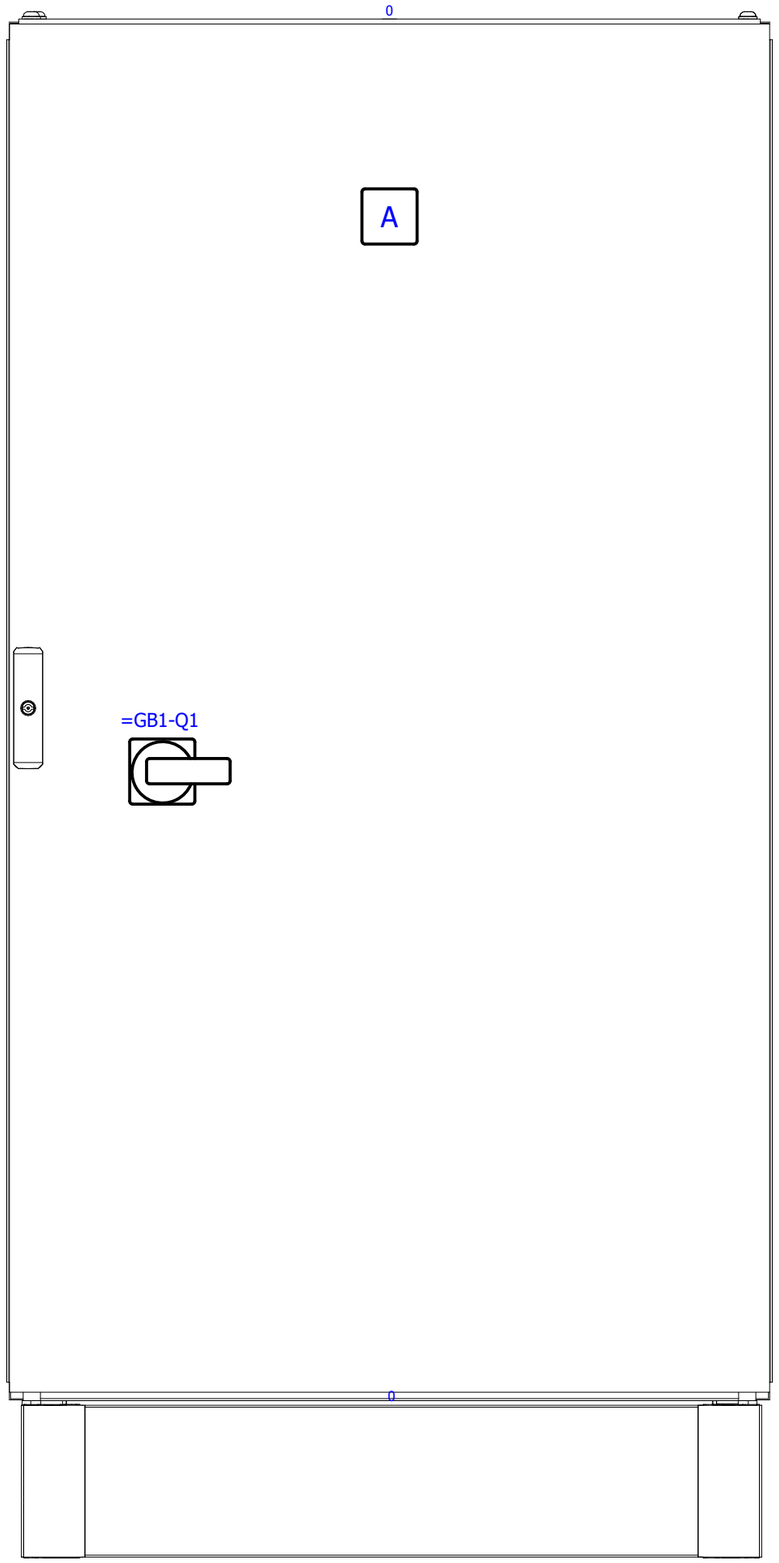

&BPA/493

=GB1++A1+F21&EFS/6

			Date	12.12.2019	Mixed feed plant Golden Poultry	BEYTEC ... your gateway to success	Panel layout
			Ed.	willen			
			Appr		Hammer mill		
Modification	Date	Name	Original	V:\EPLAN\Projekte\Company\Beytec\2018\Feed Mill Alssad.elk	Replaced by	Replaced by	

=		
+ HM2		
1 : 8	Part II	Page 494
		Page 605

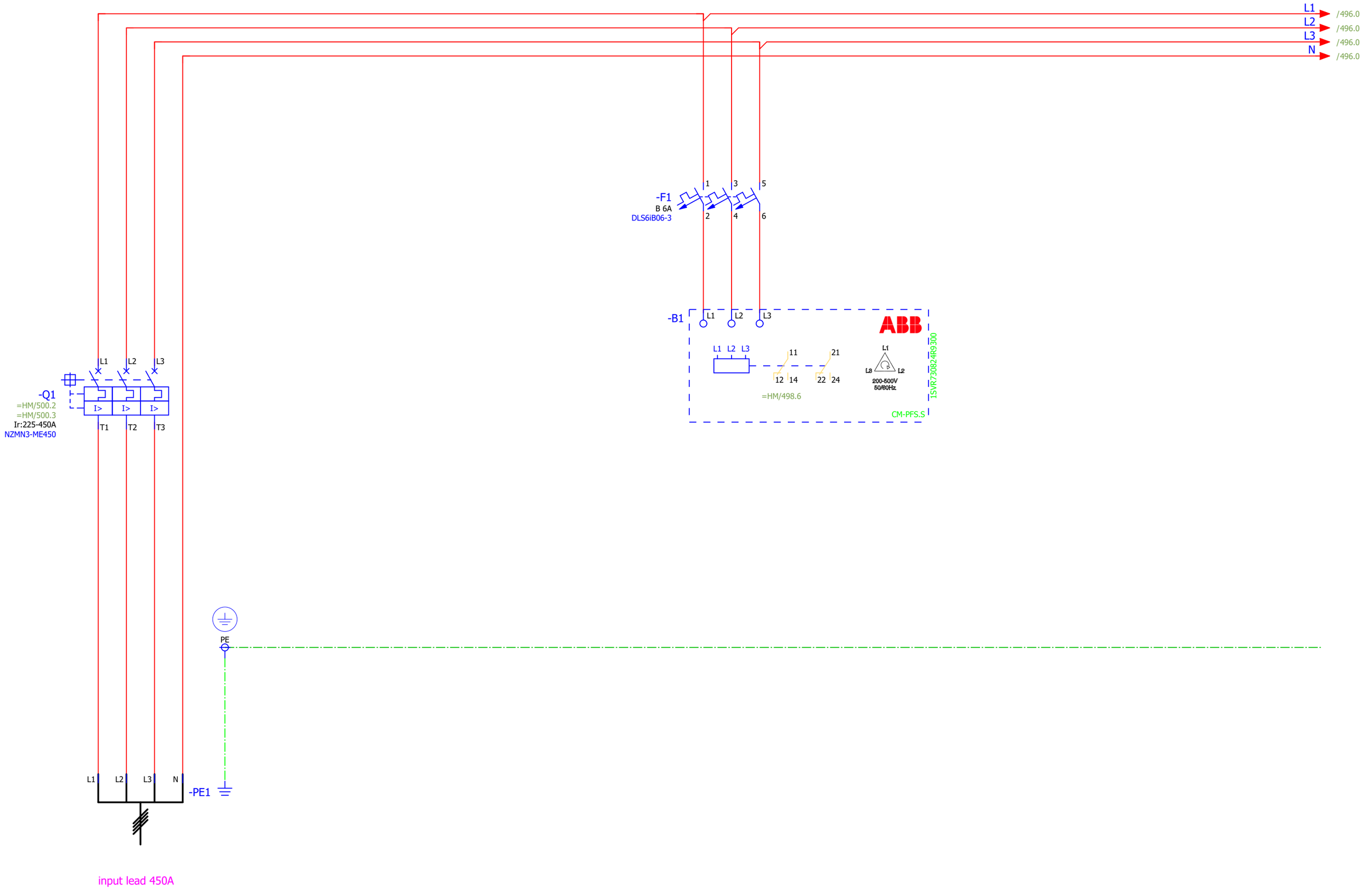

			Date	12.12.2019	Mixed feed plant Golden Poultry	BEYTEC ... your gateway to success	Power supply		= GB1	
			Ed.	willen					+ HM2	
			Appr		Hammer mill			1 : 1	Part II	Page 495
Modification	Date	Name	Original	V:\EPLAN\Projekte\Company\Replace\Beytec\2018\Feed Mill Alssad.elk	Replaced by					Page 605

Replace Beytec

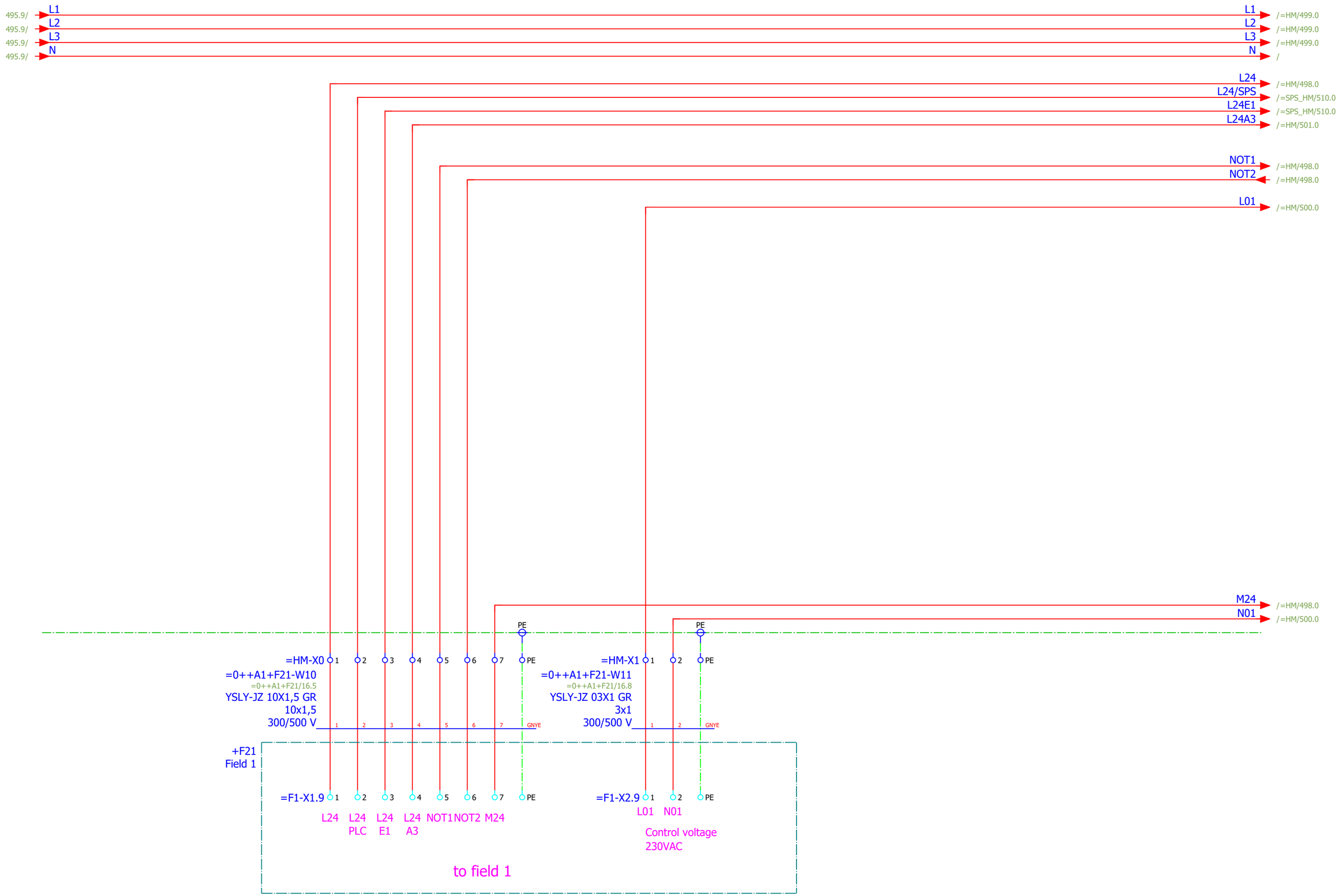

			Date	12.12.2019	Mixed feed plant Golden Poultry	BEYTEC ... your gateway to success	Power supply	= GB1
			Ed.	willen				+ HM2
			Appr		Hammer mill		1 : 1	Part II
Modification	Date	Name	Original	V:\EPLAN\Projekte\Company\Replace\Beytec\2018\Feed Mill Alssad.elk	Replaced by			Page 496 / Page 605

Replace Beytec 2018

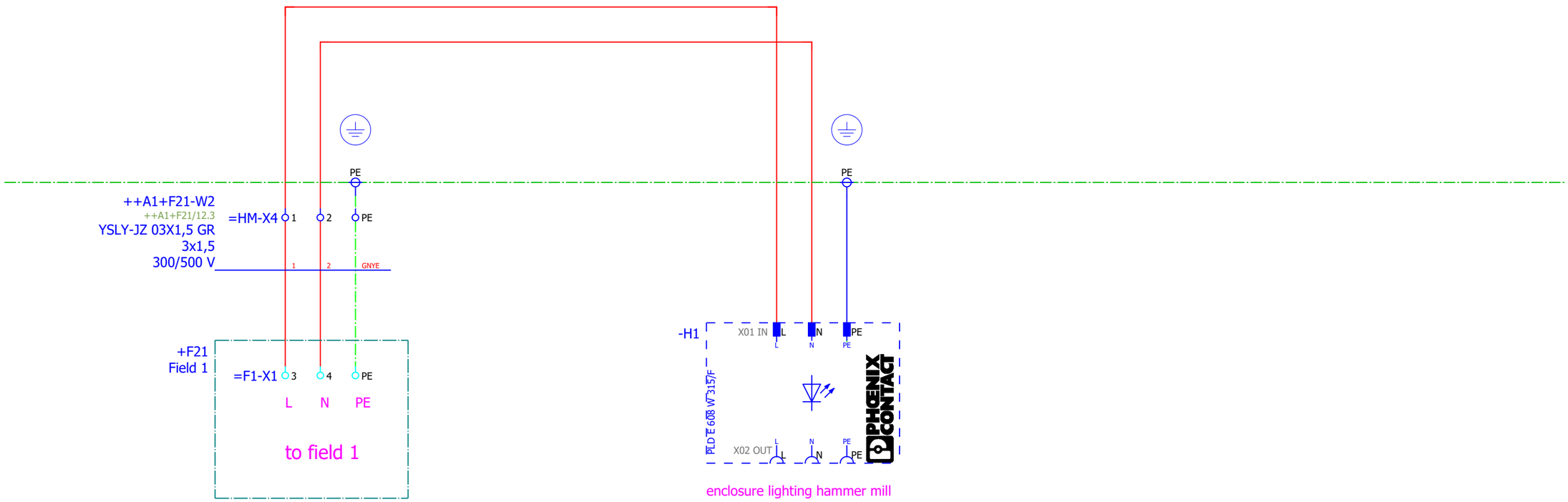

			Date	12.12.2019	Mixed feed plant Golden Poultry	BEYTEC ... your gateway to success	Control cabinet lighting	= E01	
			Ed.	willen				+ HM2	
			Appr		Hammer mill			1 : 1 / Part II	Page 497
Modification	Date	Name	Original	V:\EPLAN\Projekte\Company\Replace\Beytec\2018\Feed Mill Alssad.elk	Replaced by				Page 605

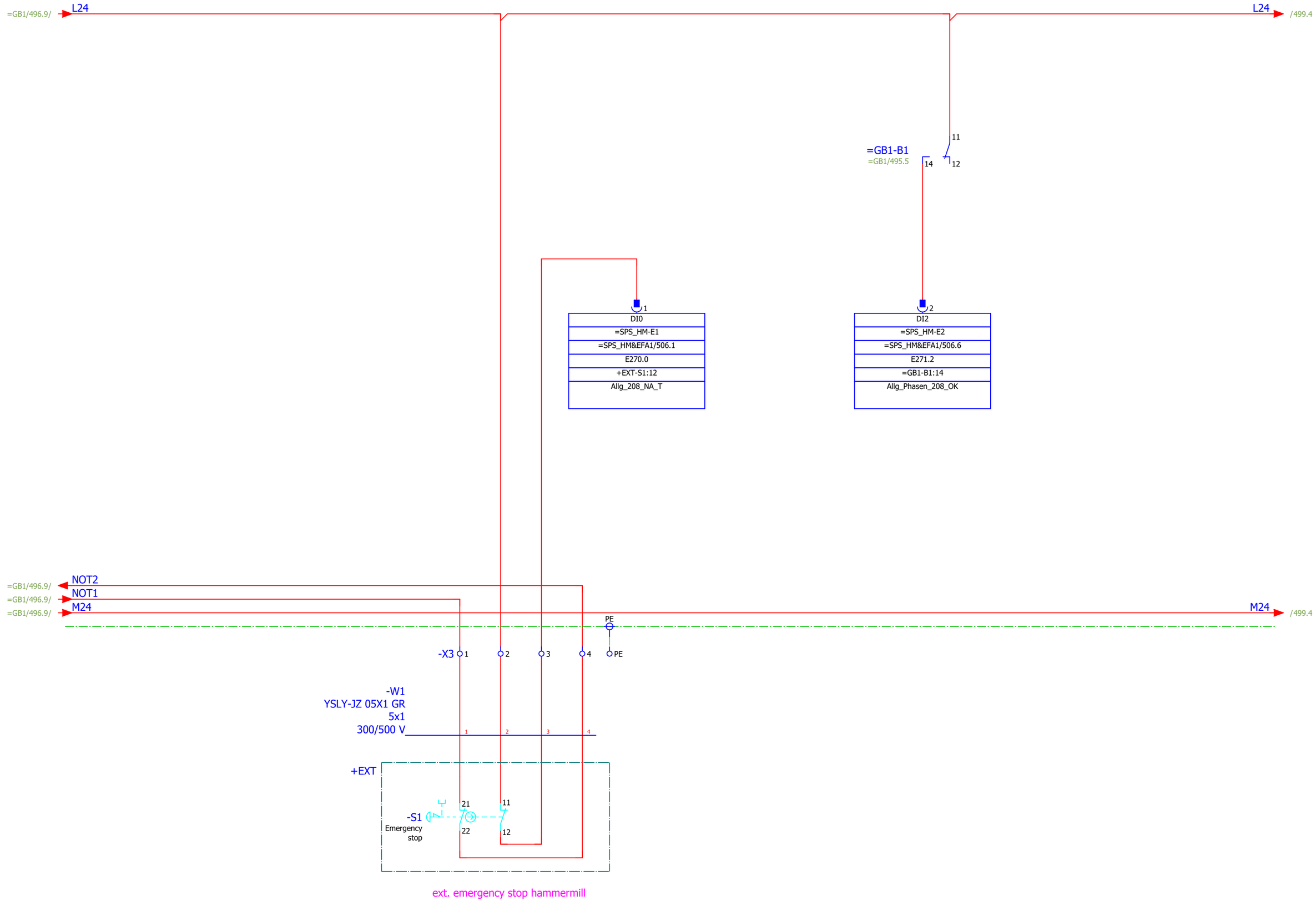
=GB1/496.9/
L24
L24
/499.4
=GB1-B1
=GB1/495.5
11
14
12
1
DI0
=SPS_HM-E1
=SPS_HM&EFA1/506.1
E270.0
+EXT-S1:12
Allg_208_NA_T
2
DI2
=SPS_HM-E2
=SPS_HM&EFA1/506.6
E271.2
=GB1-B1:14
Allg_Phasen_208_OK
=GB1/496.9/
NOT2
=GB1/496.9/
NOT1
=GB1/496.9/
M24
M24
/499.4
PE
-X3
1
2
3
4
PE
-W1
YSLY-JZ 05X1 GR
5x1
300/500 V
+EXT
-S1
Emergency
stop
21
22
11
12
ext. emergency stop hammermill

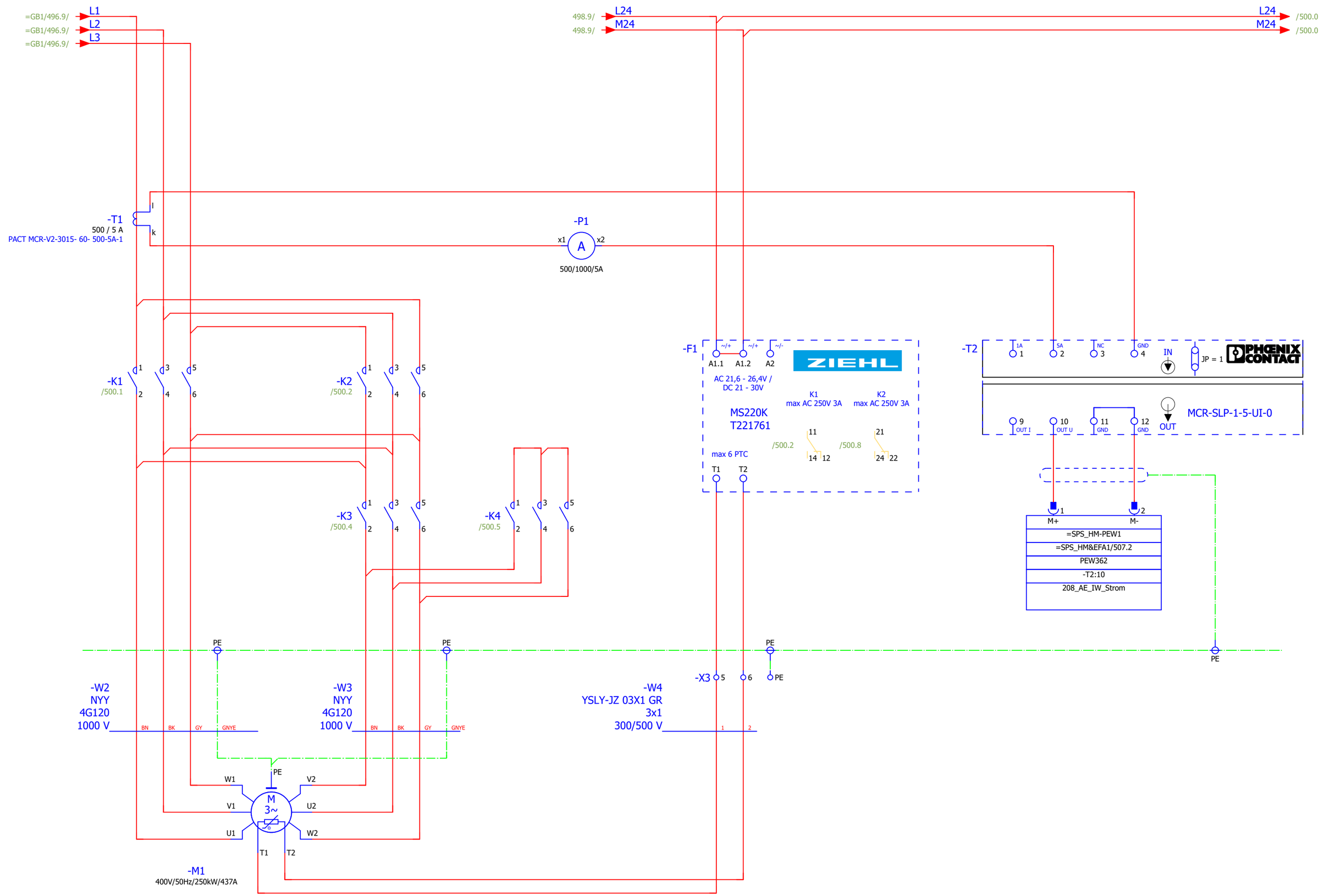

498 500

			Date	12.12.2019	Mixed feed plant Golden Poultry	BEYTEC ... your gateway to success	load circuit hammermill	= HM	
			Ed.	willen				+ HM2	
			Appr		Hammer mill			1 : 1 Part II	Page 499
Modification	Date	Name	Original	V:\EPLAN\Projekte\Company\Replace\Beytec\2018\Feed Mill Alssad.elk	Replaced by				Page 605

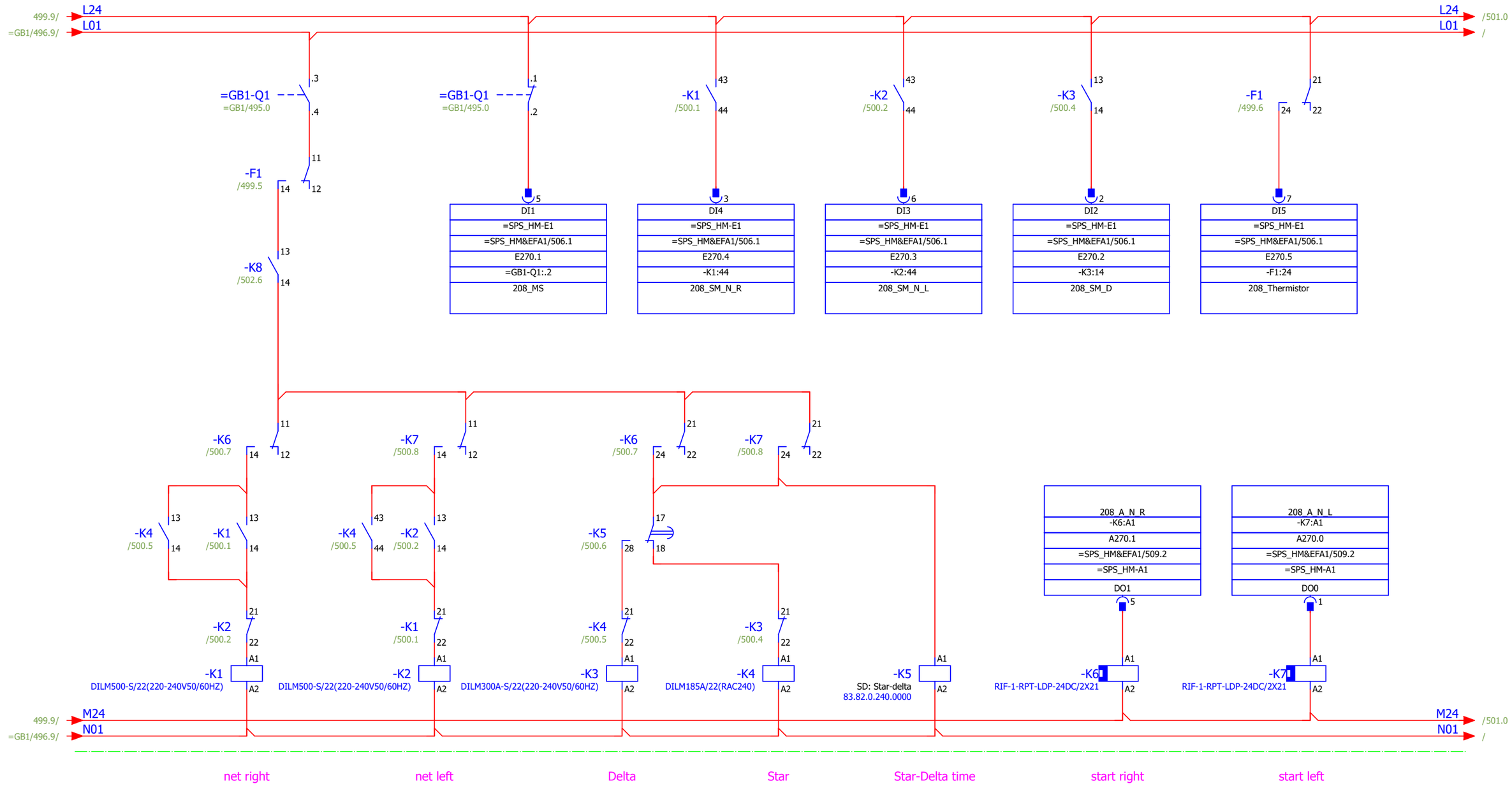

1	2	/499.1		
3	4	/499.1		
5	6	/499.1		
13	14	/500.1		
21	22	/500.2		
31	32			
43	44	/500.4		
21	22	/502.6		

1	2	/499.2
3	4	/499.2
5	6	/499.3
13	14	/500.2
21	22	/500.1
31	32	
43	44	/500.5
21	22	/502.6

1	2	/499.2
3	4	/499.2
5	6	/499.3
13	14	/500.6
21	22	/500.5
31	32	
43	44	

1	2	/499.3
3	4	/499.4
5	6	/499.4
13	14	/500.1
21	22	/500.4
31	32	
43	44	/500.2

28		
18	17	/500.4

14		
12	11	/500.1
24		
22	21	/500.4

14		
12	11	/500.2
24		
22	21	/500.5

499

501

			Date	12.12.2019	Mixed feed plant Golden Poultry	BEYTEC ... your gateway to success	control circuit hammermill	= HM
			Ed.	willen				+ HM2
			Appr		Hammer mill		1 : 1 / Part II	Page 500
Modification	Date	Name	Original	V:\EPLAN\Projekte\Company\Replace\Beytec\2018\Feed Mill Alssad.elk	Replaced by			Page 605

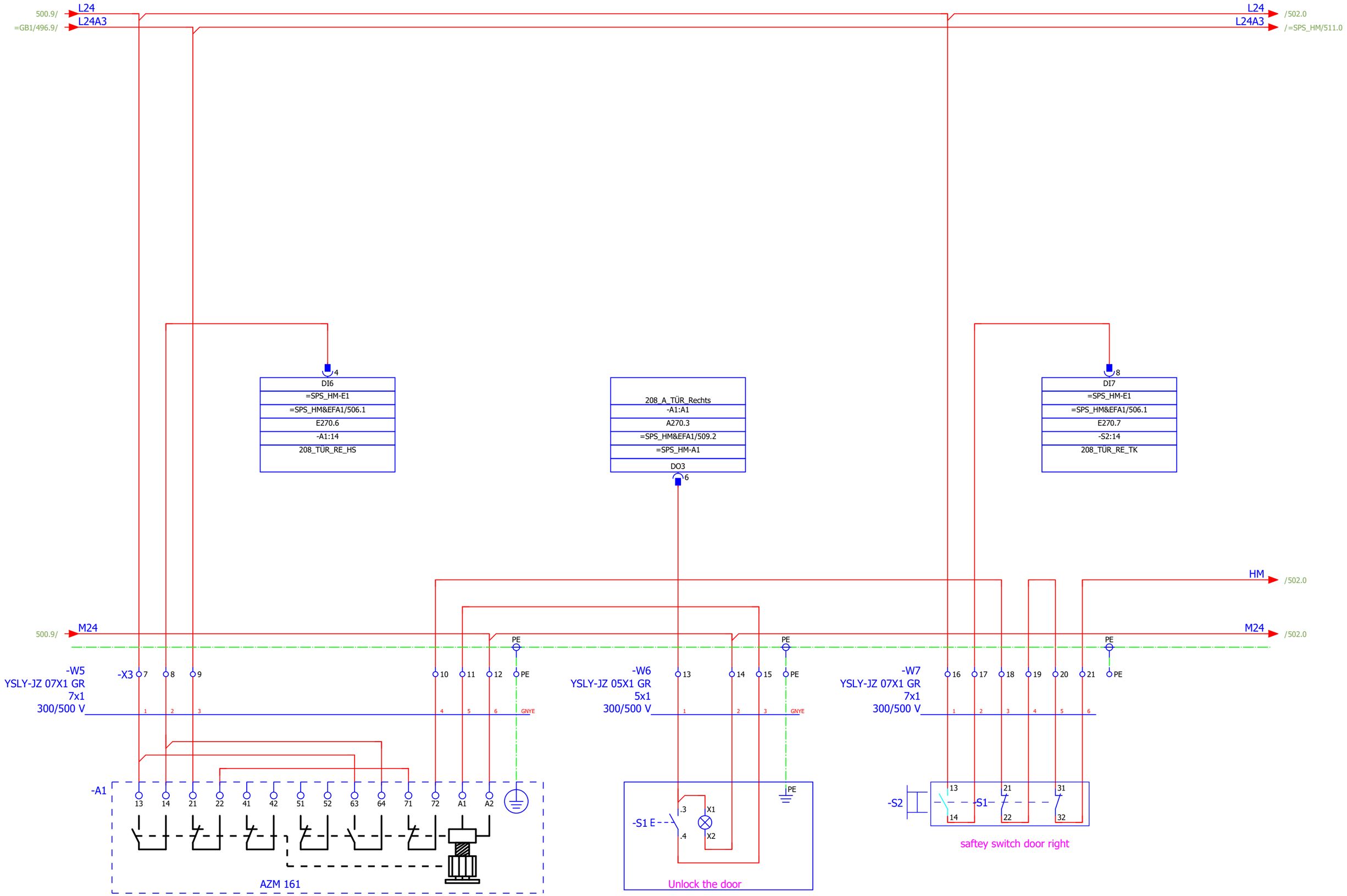

500

502

			Date	12.12.2019	Mixed feed plant Golden Poultry	BEYTEC ... your gateway to success	hammermill door right	= HM	
			Ed.	willen				+ HM2	
			Appr		Hammer mill			1 : 1	Part II
Modification	Date	Name	Original	V:\EPLAN\Projekte\Company\Beytec\2018\Feed Mill Alssad.elk	Replaced by			Page 501	Page 605

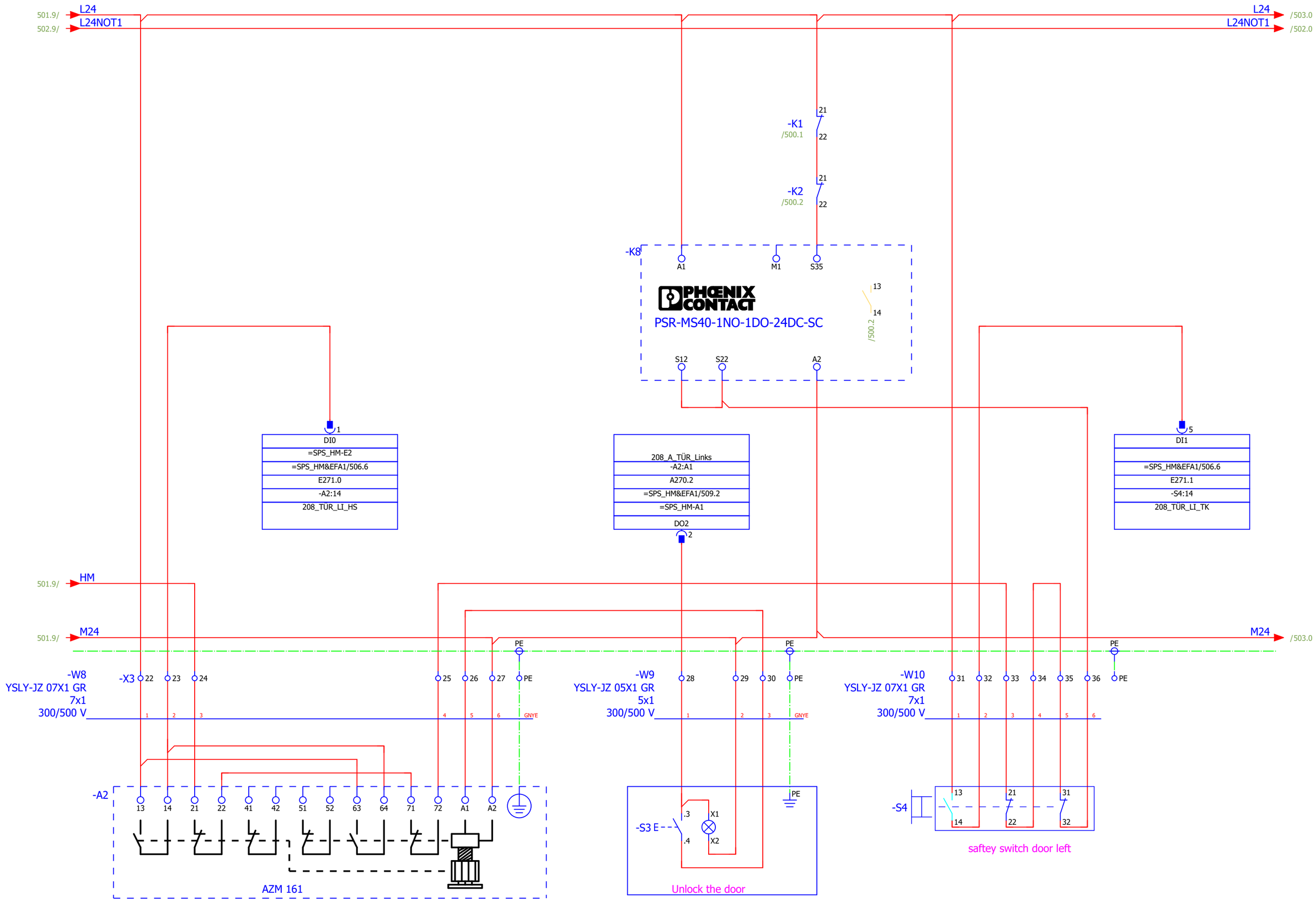

			Date	12.12.2019	Mixed feed plant Golden Poultry	BEYTEC ... your gateway to success	hammermill door left		= HM	
			Ed.	willen					+ HM2	
			Appr		Hammer mill			1 : 1	Part II	Page 502
Modification	Date	Name	Original	V:\EPLAN\Projekte\Company\Replace\Beytec\2018\Feed Mill Alssad.elk	Replaced by					Page 605

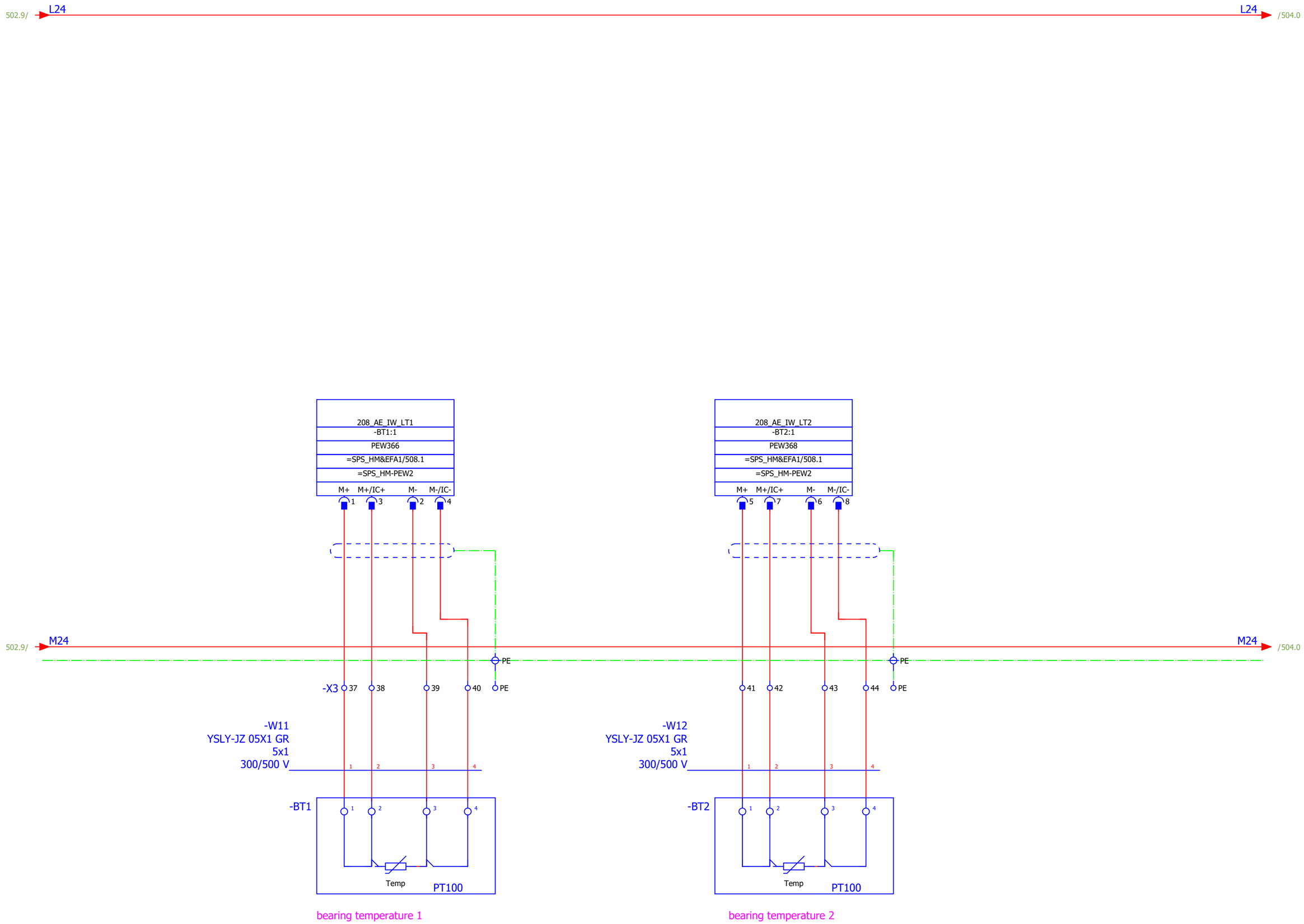

502

504

			Date	12.12.2019	Mixed feed plant Golden Poultry	BEYTEC ... your gateway to success	overview bearing temperature	= HM	
			Ed.	willen				+ HM2	
			Appr		Hammer mill			1 : 1 / Part II	Page 503
Modification	Date	Name	Original	V:\EPLAN\Projekte\Company\Replace\Beytec\2018\Feed Mill Alssad.elk	Replaced by				Page 605

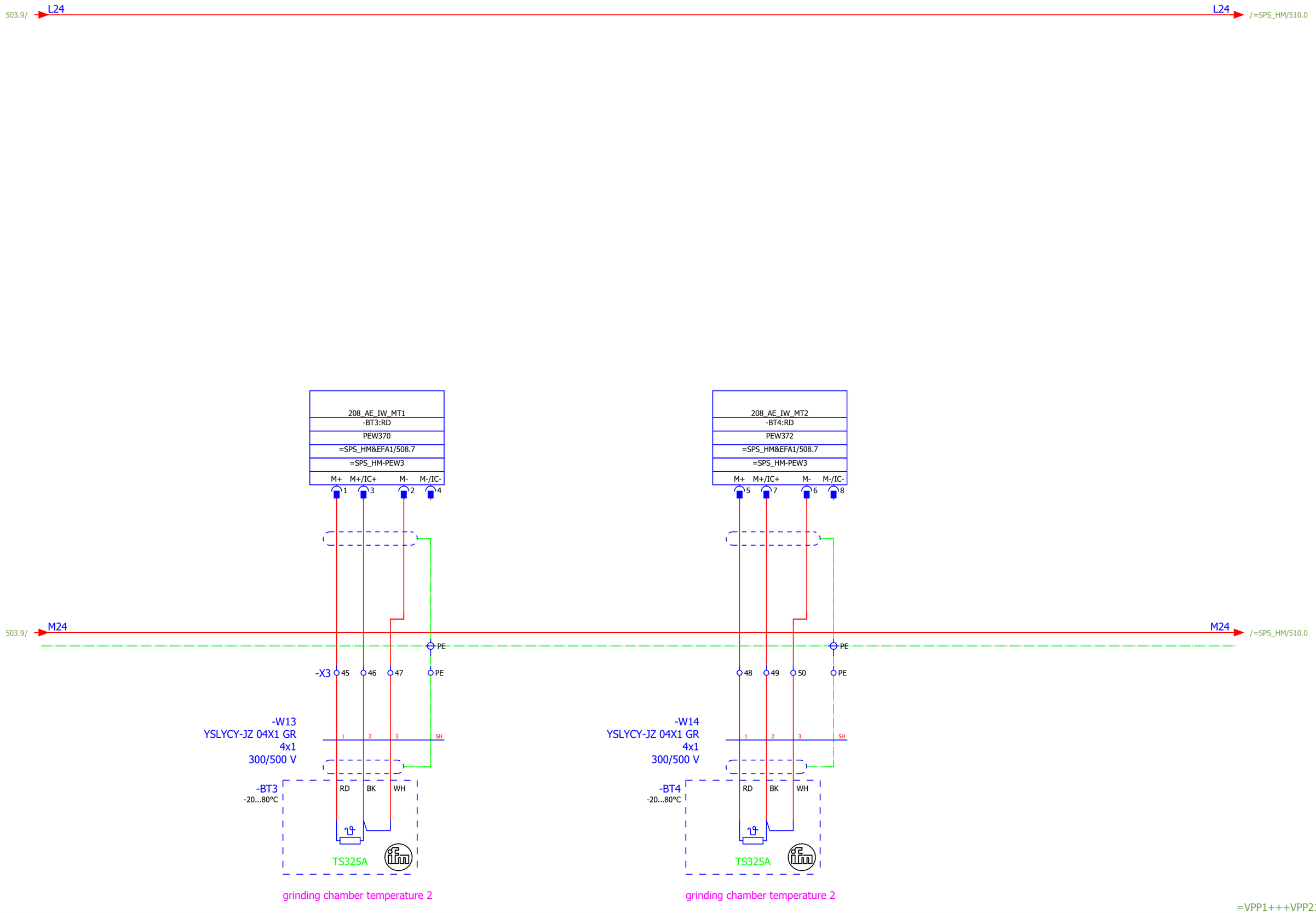

503

=VPP1+++VPP21/552

			Date	12.12.2019	Mixed feed plant Golden Poultry	BEYTEC ... your gateway to success	Auswertung Mahlkammer Temperatur			= HM	
			Ed.	willen						+ HM2	
			Appr		Hammer mill			1 : 1	Part II	Page	504
Modification	Date	Name	Original	V:\EPLAN\Projekte\Company\Beytec\2018\Feed Mill Alssad.elk	Replaced by					Page	605

Replaced by

-K1
&ETC/512.2

ET200S SIEMENS
IM 151-1 STANDARD

-X1: DP &EFS/510.6

-X20:1 1L+ &EFS/510.3
-X20:2 2L+ &EFS/510.4
-X20:3 1M &EFS/510.5
-X20:4 2M &EFS/510.6

6ES7151-1AA06-0AB0

-K2
&ETC/512.3

ET200S SIEMENS
PM-E DC 24V

2 DC24V &EFS/511.1
3 M &EFS/511.1
A4 AUX1 &EFS/511.4

6 DC24V &EFS/511.2
7 M &EFS/511.2
A8 AUX1 &EFS/511.4

6ES7138-4CA01-0AA0
+ TM-P15C23-A0

-K3
&ETC/512.5

ET200S SIEMENS
PM-E DC 24V

2 DC24V &EFS/511.5
3 M &EFS/511.6
A4 AUX1 &EFS/511.8

6 DC24V &EFS/511.6
7 M &EFS/511.7
A8 AUX1 &EFS/511.8

6ES7138-4CA01-0AA0
+ TM-P15C23-A0

			Date	12.12.2019	Mixed feed plant Golden Poultry	BEYTEC ... your gateway to success	overview bus coupler and power module	= SPS_HM	
			Ed.	willen	Hammer mill			+ HM2	
			Appr				1 : 1	Part II	Page 505
Modification	Date	Name	Original	V:\EPLAN\Projekte\Company\Alpaca\Beytec\2018\Feed Mill Alssad.elk	Replaced by				Page 605

-E1
&ETC/512.3

ET200S SIEMENS
8 DI DC 24 V

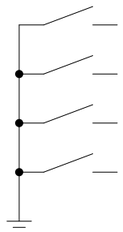

E270.0	1 DI0	=HM&EFS/498.4HM+EXT-S1:12	Allg_208_NA_T
E270.2	2 DI2	=HM&EFS/500.6HM-K3:14	208_SM_D
E270.4	3 DI4	=HM&EFS/500.4HM-K1:44	208_SM_N_R
E270.6	4 DI6	=HM&EFS/501.2HM-A1:14	208_TÜR_RE_HS

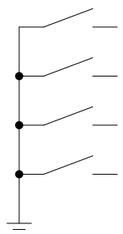

E270.1	5 DI1	=HM&EFS/500.3GB1-Q1:.2	208_MS
E270.3	6 DI3	=HM&EFS/500.5HM-K2:44	208_SM_N_L
E270.5	7 DI5	=HM&EFS/500.8HM-F1:24	208_Thermistor
E270.7	8 DI7	=HM&EFS/501.8HM-S2:14	208_TÜR_RE_TK

6ES7131-4BF00-0AA0
+ TM-E15C24-01

-E2
&ETC/512.4

ET200S SIEMENS
8 DI DC 24 V

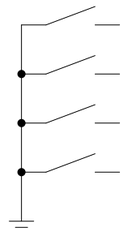

E271.0	1 DI0	=HM&EFS/502.2HM-A2:14	208_TÜR_LI_HS
E271.2	2 DI2	=HM&EFS/498.6GB1-B1:14	Allg_Phasen_208_OK
E271.4	3 DI4		Spare
E271.6	4 DI6		Spare

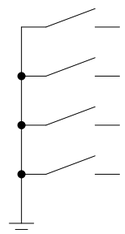

E271.1	5 DI1	=HM&EFS/502.8HM-S4:14	208_TÜR_LI_TK
E271.3	6 DI3		Spare
E271.5	7 DI5		Spare
E271.7	8 DI7		Spare

6ES7131-4BF00-0AA0
+ TM-E15C24-01

-PEW1
&ETC/512.4

ET200S SIEMENS
2 AI U STANDARD

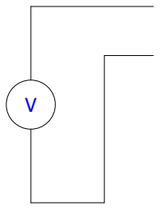

PEW362	1 M+	=HM&EFS/499.≠HM-T2:10	208_AE_IW_Strom
PEW362	2 M-	=HM&EFS/499.8	
	3 n.c.		
	4 n.c.		

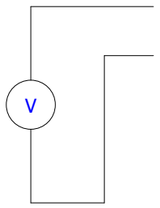

PEW364	5 M+	Spare
PEW364	6 M-	
	7 n.c.	
	8 n.c.	

6ES7134-4FB01-0AB0
+ TM-E15C24-01

			Date	12.12.2019	Mixed feed plant Golden Poultry	BEYTEC ... your gateway to success	overview analog inputs
			Ed.	willen			
			Appr		Hammer mill		
Modification	Date	Name	Original	V:\EPLAN\Projekte\Company\Alssad\Beytec\2018\Feed Mill Alssad.elk	Replaced by		

= SPS_HM
+ HM2
1 : 1 | Part II | Page 507 | Page 605

-PEW2
&ETC/512.4

ET200S SIEMENS
2 AI RTD STANDARD

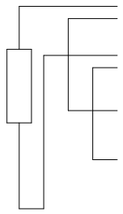

PEW366	1 M+	=HM&EFS/503.2HM-BT1:1	208_AE_IW_LT1
PEW366	2 M-	=HM&EFS/503.3	
PEW366	3 M+/IC+	=HM&EFS/503.3	
PEW366	4 M-/IC-	=HM&EFS/503.3	

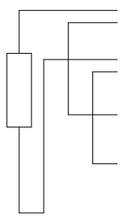

PEW368	5 M+	=HM&EFS/503.5HM-BT2:1	208_AE_IW_LT2
PEW368	6 M-	=HM&EFS/503.6	
PEW368	7 M+/IC+	=HM&EFS/503.5	
PEW368	8 M-/IC-	=HM&EFS/503.6	

6ES7134-4JB51-0AB0
+ TM-E15C24-01

-PEW3
&ETC/512.5

ET200S SIEMENS
2 AI RTD STANDARD

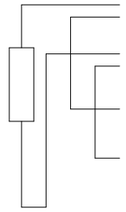

PEW370	1 M+	=HM&EFS/504.2HM-BT3:RD	208_AE_IW_MT1
PEW370	2 M-	=HM&EFS/504.3	
PEW370	3 M+/IC+	=HM&EFS/504.3	
PEW370	4 M-/IC-	=HM&EFS/504.3	

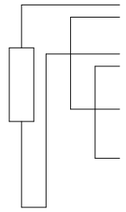

PEW372	5 M+	=HM&EFS/504.5HM-BT4:RD	208_AE_IW_MT2
PEW372	6 M-	=HM&EFS/504.6	
PEW372	7 M+/IC+	=HM&EFS/504.5	
PEW372	8 M-/IC-	=HM&EFS/504.6	

6ES7134-4JB51-0AB0
+ TM-E15C24-01

-A1
&ETC/512.6

ET200S SIEMENS
8 DO DC24V 0,5A

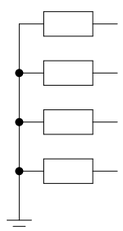

A270.0 1/QX.0/DO0	1 DO0	=HM&EFS/500.8HM-K7:A1	208_A_N_L
A270.2 2/QX.2/DO2	2 DO2	=HM&EFS/502.5HM-A2:A1	208_A_TÜR_Links
A270.4 3/QX.4/DO4	3 DO4		Spare
A270.6 4/QX.6/DO6	4 DO6		Spare

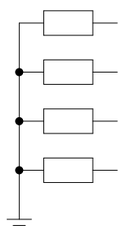

A270.1 5/QX.1/DO1	5 DO1	=HM&EFS/500.7HM-K6:A1	208_A_N_R
A270.3 6/QX.3/DO3	6 DO3	=HM&EFS/501.5HM-A1:A1	208_A_TÜR_Rechts
A270.5 7/QX.5/DO5	7 DO5		Spare
A270.7 8/QX.7/DO7	8 DO7		Spare

6ES7132-4BF00-0AA0
+ TM-E15C24-01

			Date	12.12.2019	Mixed feed plant Golden Poultry	BEYTEC ... your gateway to success	overview outputs		= SPS_HM
			Ed.	willen	Hammer mill				+ HM2
			Appr				1 : 1	Part II	Page 509
Modification	Date	Name	Original	V:\EPLAN\Projekte\Company\Beytec\2018\Feed Mill Alssad.elk	Replaced by				Page 605

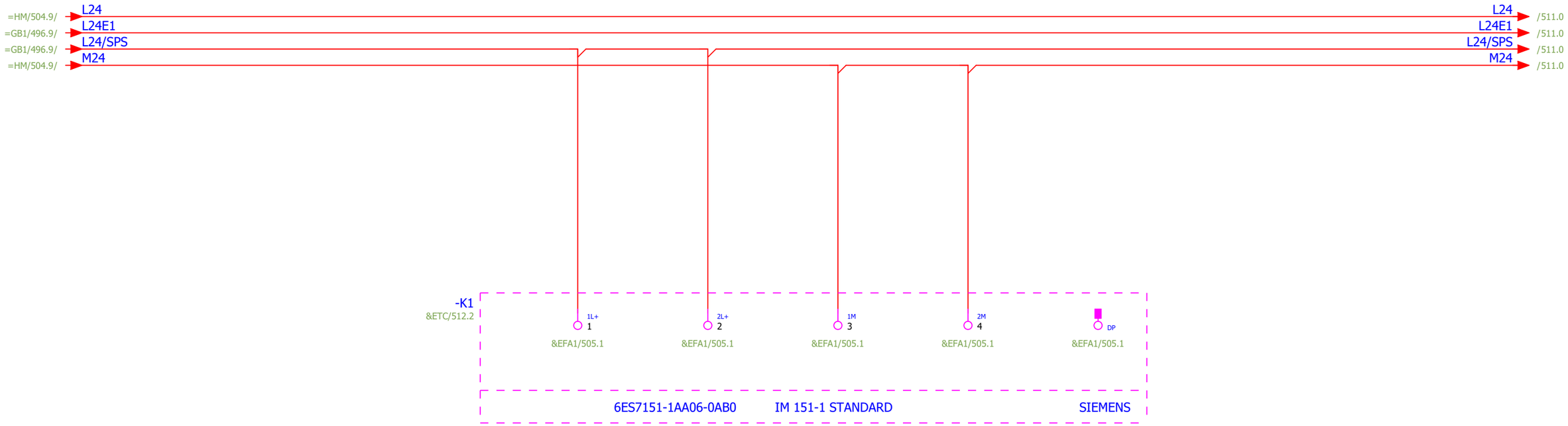
=HM/504.9/
L24
=GB1/496.9/
L24E1
=GB1/496.9/
L24/SPS
=HM/504.9/
M24
L24
/511.0
L24E1
/511.0
L24/SPS
/511.0
M24
/511.0
-K1
&ETC/512.2
1L+
1
&EFA1/505.1
2L+
2
&EFA1/505.1
1M
3
&EFA1/505.1
2M
4
&EFA1/505.1
DP
&EFA1/505.1
6ES7151-1AA06-0AB0
IM 151-1 STANDARD
SIEMENS

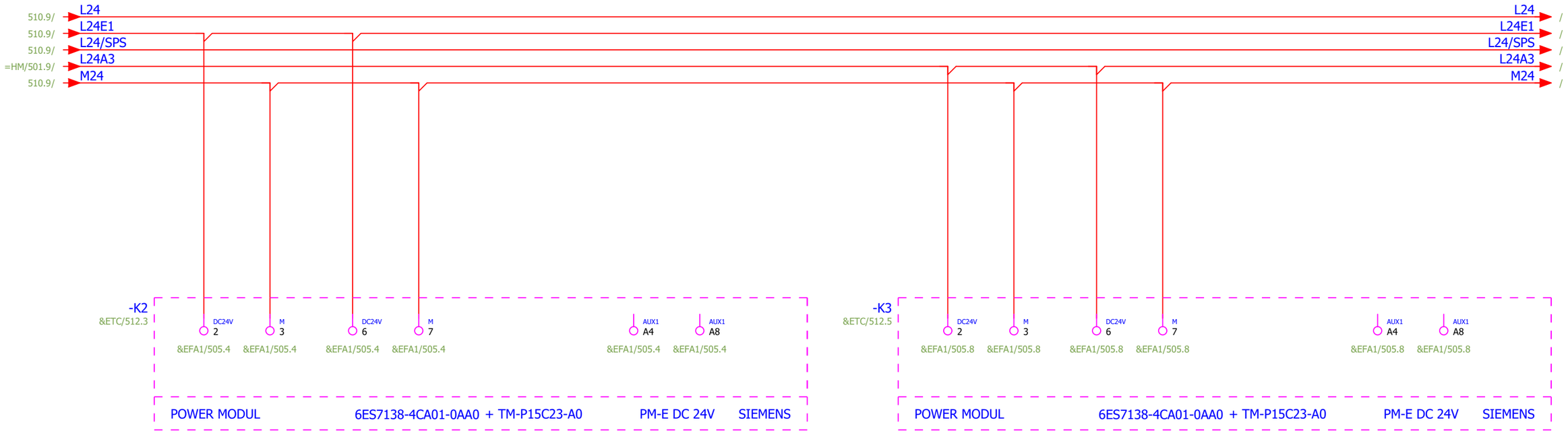

			Date	12.12.2019	Mixed feed plant Golden Poultry	BEYTEC ... your gateway to success	PLC power supply power module		= SPS_HM
			Ed.	willen					+ HM2
			Appr		Hammer mill			1 : 1 / Part II	Page 511
Modification	Date	Name	Original	V:\EPLAN\Projekte\Company\Replace\Beytec\2018\Feed Mill Alssad.elk	Replaced by				Page 605

Replace(Beytec)

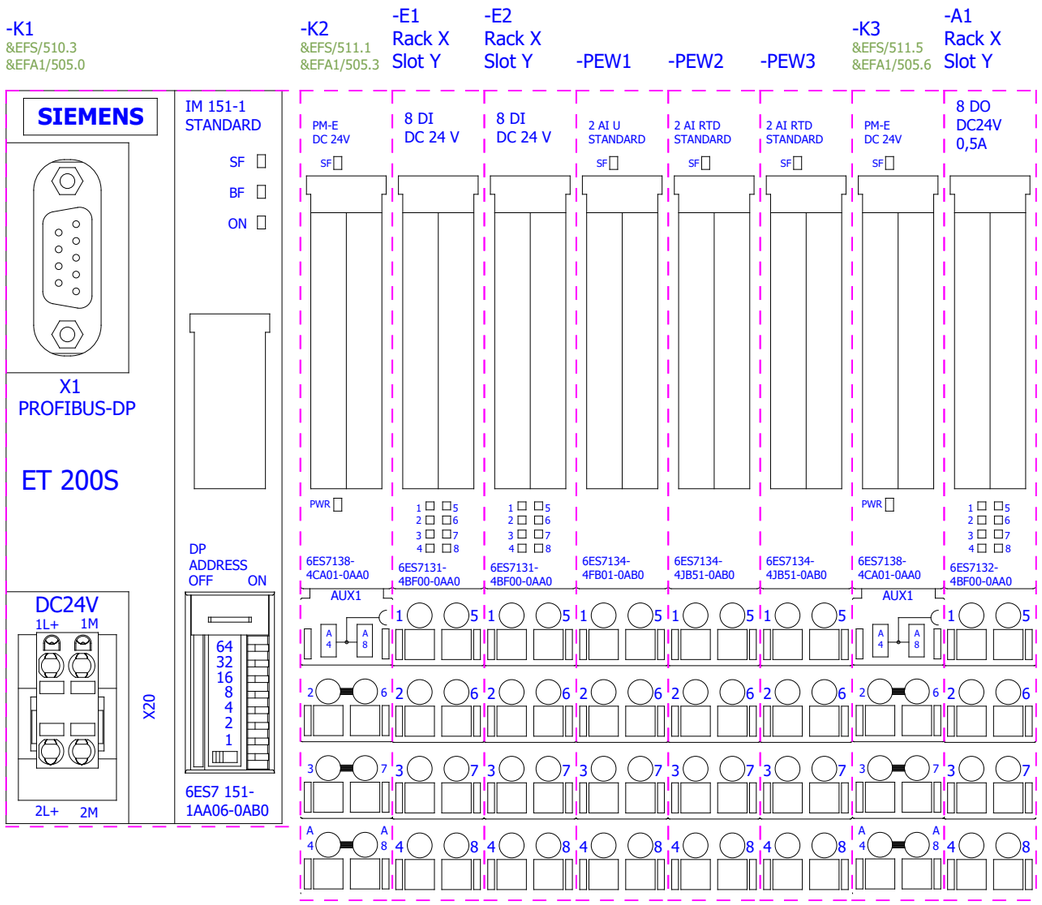

&EFS/511

			Date	12.12.2019	Mixed feed plant Golden Poultry	BEYTEC ... your gateway to success	PLC overview field HM		= SPS_HM
			Ed.	willen					+ HM2
			Appr		Hammer mill			1 : 1 / Part II	Page 512
Modification	Date	Name	Original	V:\EPLAN\Projekte\Company\Archive\Beytec\2018\Feed Mill Alssad.elk	Replaced by				Page 605

BEYTEC

... your gateway to success

Company / customer	BeyTec
Project description	Golden Poultry
Job number	Part II
Mounting location	pellet press 1

Technical data:

Operating voltage	400 V
Operating frequency	50 Hz
Operating current	
Power network	
Control voltage	24VDC
Protection class electrical	SK I
Degree of protection	IP54
Responsible for project	Willen

Created on	21.10.2019		
Edit date	12.12.2019	by (short name) willen	Number of pages 605

Table of contents

Column X: An automatically generated page was edited

F06_001_EN

Page	Page description	supplementary page field	Date	Edited by	X
++A2+PP21&BAA/513	Title page / cover sheet		12.12.2019	willen	X
++A2+PP21&BAB/512	Table of contents : ++A2+PP21&BAA/513 - =SPS_PP++A2+PP21&ETC/535		12.12.2019	willen	
++A2+PP21&BPA/515	Summarized parts list : ABB.1SVR730824R9300 - SIE.6ES7138-4CA01-0AA0+TM-P15C23-A0		12.12.2019	willen	X
++A2+PP21&BPA/516	Summarized parts list : SIE.6ES7134-4FB01-0AB0+TM-E15C24-01 - SIE.6ES7134-4FB01-0AB0+TM-E15C24-01		12.12.2019	willen	X
=GB1++A2+PP21&EFS/517	Power supply		12.12.2019	willen	
=GB1++A2+PP21&EFS/518	Power supply		12.12.2019	willen	
=E01++A2+PP21&EFS/519	Control cabinet lighting		12.12.2019	willen	
=254++A2+PP21&EFS/520	load circuit pellet press 1 M1		12.12.2019	willen	
=254++A2+PP21&EFS/521	load circuit pellet press 1 M2		12.12.2019	willen	
=254++A2+PP21&EFS/522	control circuit press 1		12.12.2019	willen	
=254++A2+PP21&EFS/523	control circuit press 1		12.12.2019	willen	
=254++A2+PP21&EFS/524	saftey circuit press 1		12.12.2019	willen	
=254++A2+PP21&EFS/525	saftey circuit press 1		12.12.2019	willen	
=254++A2+PP21&EFS/526	saftey circuit press 1		12.12.2019	willen	
=254++A2+PP21&EFS/527	power supply VPP1		12.12.2019	willen	
=SPS_PP++A2+PP21&EFA1/528	overview bus coupler and power module		12.12.2019	willen	
=SPS_PP++A2+PP21&EFA1/529	overview inputs		12.12.2019	willen	
=SPS_PP++A2+PP21&EFA1/530	overview inputs		12.12.2019	willen	
=SPS_PP++A2+PP21&EFA1/531	overview analog inputs		12.12.2019	willen	
=SPS_PP++A2+PP21&EFA1/532	overview outputs		12.12.2019	willen	
=SPS_PP++A2+PP21&EFS/533	PLC power supply bus coupler		12.12.2019	willen	
=SPS_PP++A2+PP21&EFS/534	PLC power supply power module		12.12.2019	willen	
=SPS_PP++A2+PP21&ETC/535	PLC overview pellet press		12.12.2019	willen	

Summarized parts list

F02_002_en_US

Order number	Quantity	Designation	Type number	Supplier
1SVR730824R9300	1	CM-PFS.S Three-phase monitoring relay	CM-PFS.S	
09916109	1	LS-Schalter B6A / 3pol	DLS6iB06-3	DOEPKE
266017	1	Switch-disconnector 3p, 400A	PN3-400	ETN
2702226	1	LED enclosure light	PLD E 608 W 315/F	PXC
NI 5012	1	Induktiver NAMUR-Sensor	IIA2010-N/10M/1D/1G/2G	IFM
T221761	2	MS220K, PTC-resistor trip device, AC/DC24V	MS220K	ZIEHL
239480	4	Contactor, 3p, 45kW/400V/AC3	DILM95(230V50HZ,240V60HZ)	ETN
277946	2	Auxiliary contact module, 1N/O+1N/C	DILM150-XHI11	ETN
101486	2	Secondary terminal wire kit, star-delta, DILM80-95	DILM95-XSL	ETN
277949	3	Auxiliary contact module, 3N/O+1N/C	DILM150-XHI31	ETN
277894	2	Contactor, 3p, 30kW/400V/AC3	DILM65(230V50HZ,240V60HZ)	ETN
277950	1	Auxiliary contact module, 2N/O+2N/C	DILM150-XHI22	ETN
2903331	2	Relay module 230AC/2X21	RIF-1-RPT-LV-230AC/2X21	PHOENIX
83.82.0.240.0000	1	Modular timer, Star-delta (SD) - AC (50/60 Hz)/DC - 24...240 V	83.82.0.240.0000	FINDER
2903370	1	Relay module 24DC / 21	RIF-0-RPT-24DC/21	PHOENIX
2904954	1	Safety relays	PSR-MS40-1NO-1DO-24DC-SC	PXC
DD2503	1	MONITOR	MONITOR/FR-1 /110-240VAC/DC	IFM
	0			
265725	2	Circuit-breaker, 3p, 200A	NZMN2-M200	EATON
216376	2	Contact element, 1N/O, front mount, 6. contact, screw connection	M22-K10	EATON
216378	2	Contact element, 1 N/C, front mount, 6. contact, screw connection	M22-K01	EATON
281666	2	Anschluss, rückseitig, 3,5mm, 3p	NZM2-XKR4	ETN
2277271	2	Current transformer	PACT MCR-V2- 3015- 60	PXC
2814359	2	Current transducers	MCR-SLP-1-5-UI-0	PHOENIX
6ES7132-4BF00-0AA0 / 6ES7193-4CB30-0AA0	1	8DO, 24V DC, 0.5A / TM-E15C24-01	6ES7132-4BF00-0AA0 / 6ES7193-4CB30-0AA0	SIE
6ES7131-4BF00-0AA0 / 6ES7193-4CB30-0AA0	4	8DI, 24V DC / TM-E15C24-01	6ES7131-4BF00-0AA0 / 6ES7193-4CB30-0AA0	SIE
6ES7151-1AA06-0AB0	1	ET200S, IM151-1 STD, 12MBIT/S	6ES7151-1AA06-0AB0	SIE
6ES7138-4CA01-0AA0 / 6ES7193-4CD30-0AA0	2	PM-E, DC 24V / TM-P15C23-A0	6ES7138-4CA01-0AA0 / 6ES7193-4CD30-0AA0	SIE

Summarized parts list

F02_002_en_US

Order number	Quantity	Designation	Type number	Supplier
6ES7134-4FB01-0AB0 / 6ES7193-4CB30-0AA0	2	2AI STD U, +/-10V, 1-5V / TM-E15C24-01	6ES7134-4FB01-0AB0 / 6ES7193-4CB30-0AA0	SIE

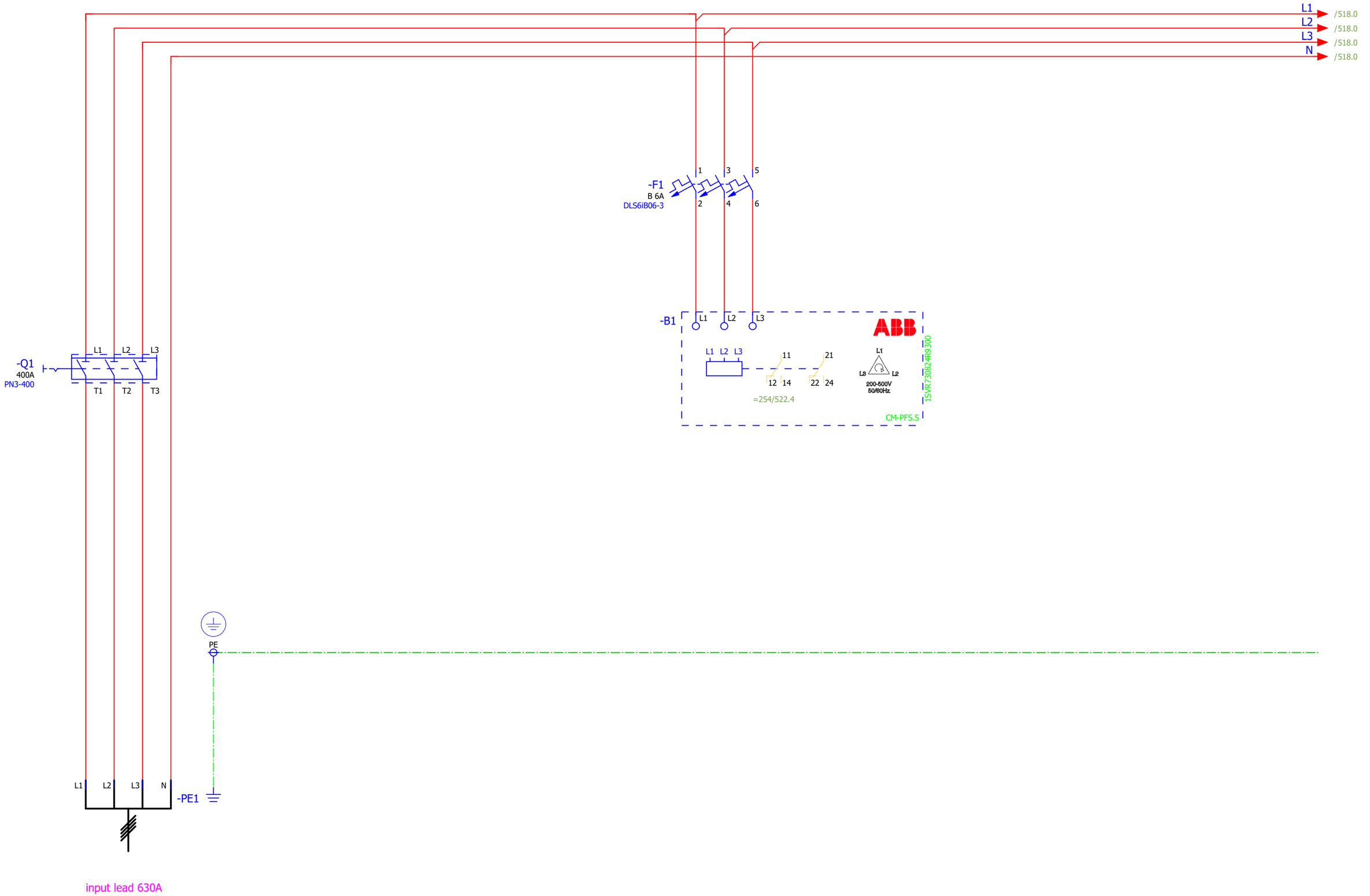

			Date	12.12.2019	Mixed feed plant Golden Poultry	BEYTEC ... your gateway to success	Power supply		= GB1	
			Ed.	willen					+ PP21	
			Appr		pellet press 1			1 : 1	Part II	Page 517
Modification	Date	Name	Original	V:\EPLAN\Projekte\Company\Replace\Beytec\2018\Feed Mill Alssad.elk	Replaced by					Page 605

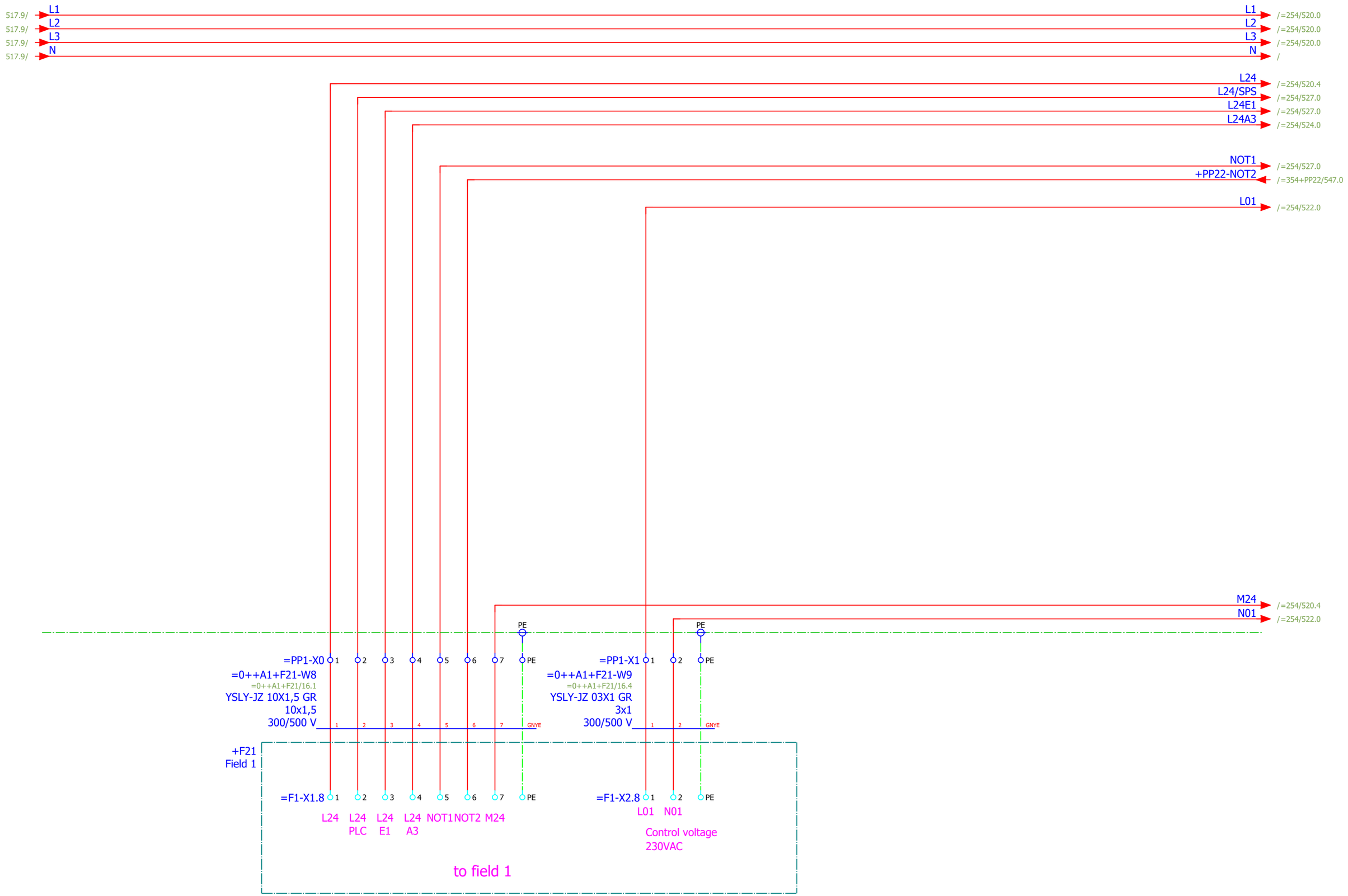

517 +PP22/539

			Date	12.12.2019	Mixed feed plant Golden Poultry	BEYTEC ... your gateway to success	Power supply	= GB1
			Ed.	willen				+ PP21
			Appr		pellet press 1		1 : 1	Part II
Modification	Date	Name	Original	V:\EPLAN\Projekte\Company\Replace\Beytec\2018\Feed Mill Alssad.elk	Replaced by			Page 518 / Page 605

Replace Beytec 2018

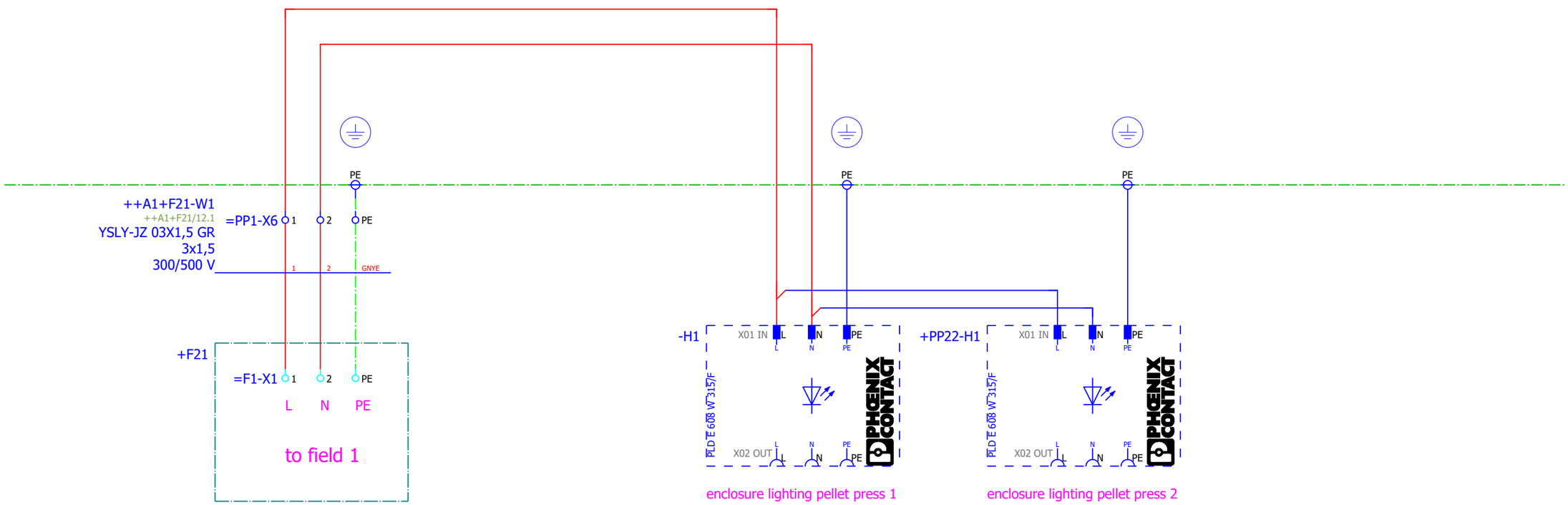

			Date	12.12.2019	Mixed feed plant Golden Poultry	BEYTEC ... your gateway to success	Control cabinet lighting		= E01
			Ed.	willen					+ PP21
			Appr		pellet press 1			1 : 1	Part II
Modification	Date	Name	Original	V:\EPLAN\Projekte\Company\Replace\Beytec\2018\Feed Mill Alssad.elk	Replaced by				Page 519
									Page 605

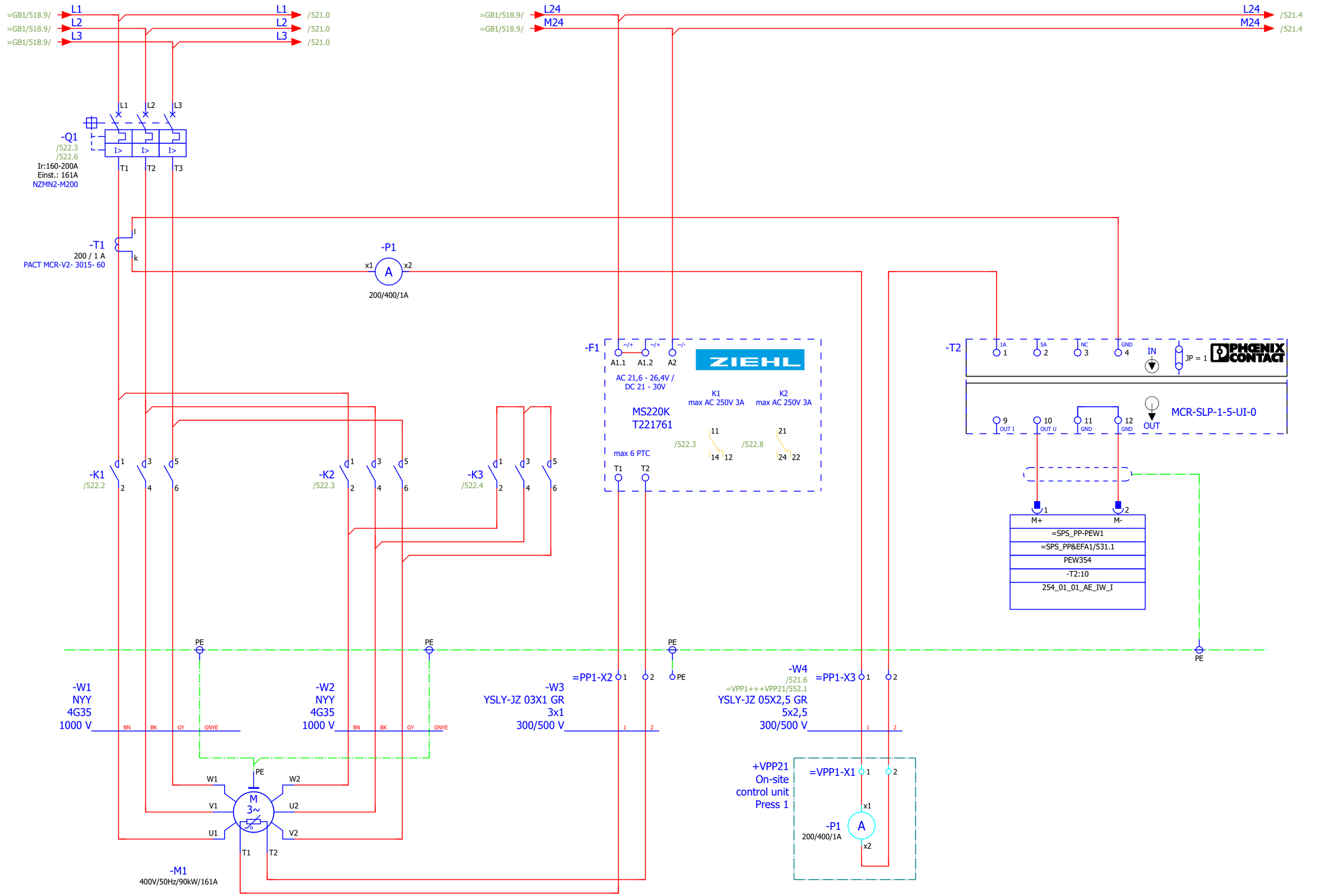

=252++A1+F25/158

521

			Date	12.12.2019	Mixed feed plant Golden Poultry	BEYTEC ... your gateway to success	load circuit pellet press 1 M1		= 254
			Ed.	willen					+ PP21
			Appr		pellet press 1			1 : 1	Part II
Modification	Date	Name	Original	V:\EPLAN\Projekte\Company\Beytec\2018\Feed Mill Alssad.elk	Replaced by				Page 520
									Page 605

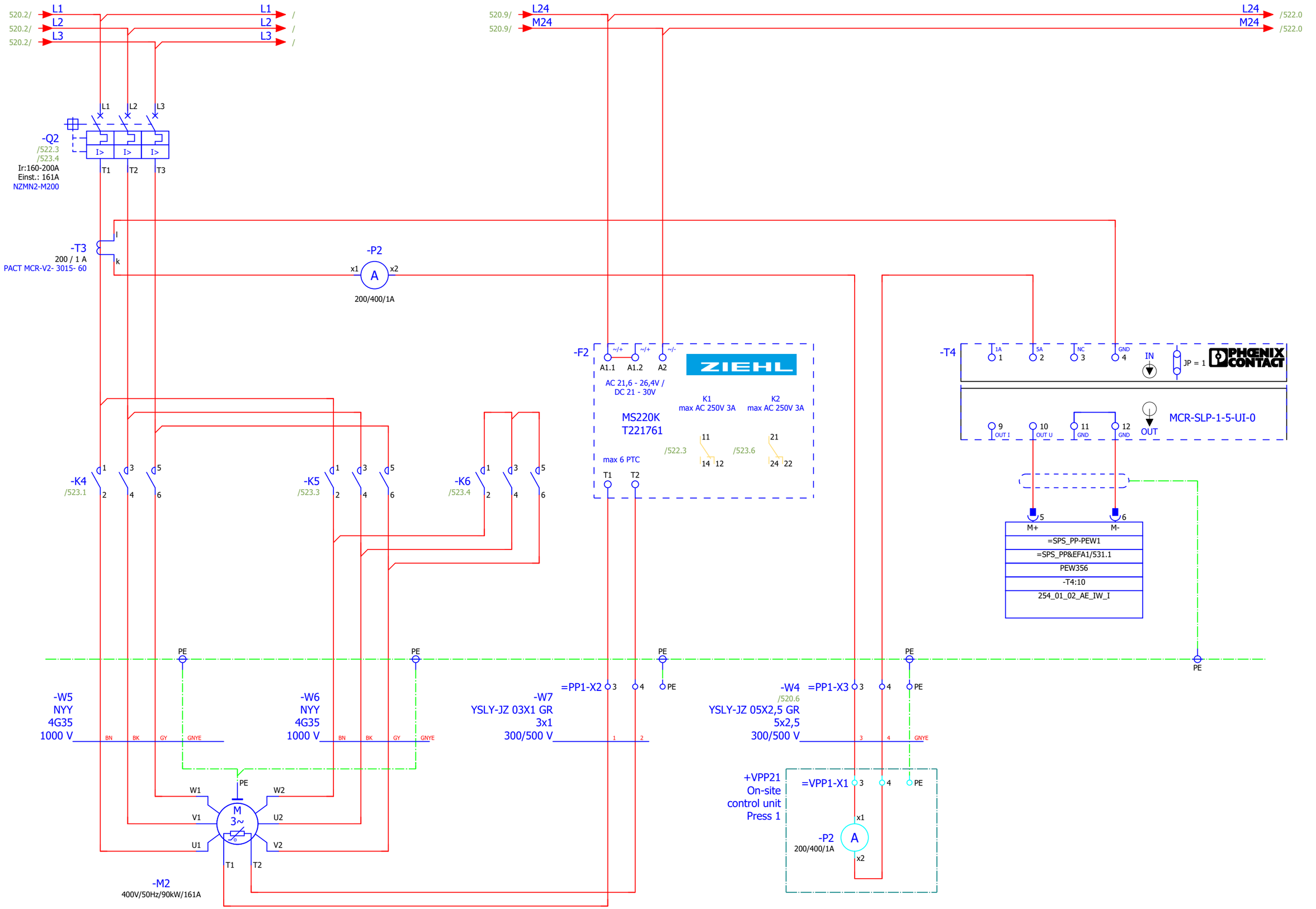

520 522

			Date	12.12.2019	Mixed feed plant Golden Poultry	BEYTEC ... your gateway to success	load circuit pellet press 1 M2	= 254	
			Ed.	willen				+ PP21	
			Appr		pellet press 1			1 : 1 Part II	Page 521
Modification	Date	Name	Original	V:\EPLAN\Projekte\Company\Replace\Beytec\2018\Feed Mill Alssad.elk	Replaced by				Page 605

Replace Beytec

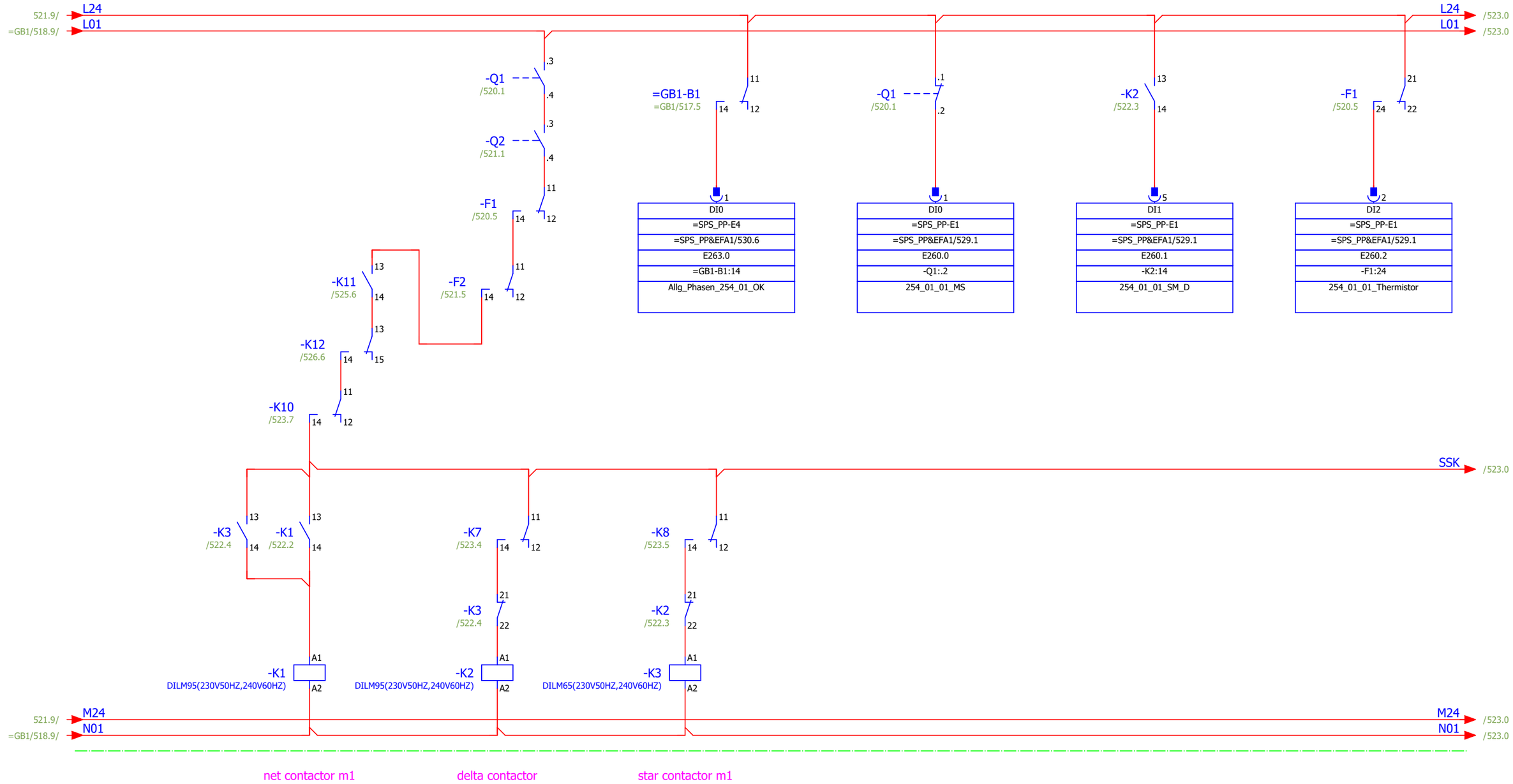

1	2	/520.1	1	2	/520.2	1	2	/520.3
3	4	/520.1	3	4	/520.2	3	4	/520.4
5	6	/520.1	5	6	/520.3	5	6	/520.4
13	14	/522.2	13	14	/522.7	13	14	/522.1
21	22	/525.6	21	22	/522.4	21	22	/522.3
			33	34		33	34	
			43	44		43	44	

521 523

			Date	12.12.2019	Mixed feed plant Golden Poultry	BEYTEC ... your gateway to success	control circuit press 1	= 254
			Ed.	willen				+ PP21
			Appr		pellet press 1		1 : 1	Part II
Modification	Date	Name	Original	V:\EPLAN\Projekte\Company\Beytec\2018\Feed Mill Alssad.elk	Replaced by			Page 522
								Page 605

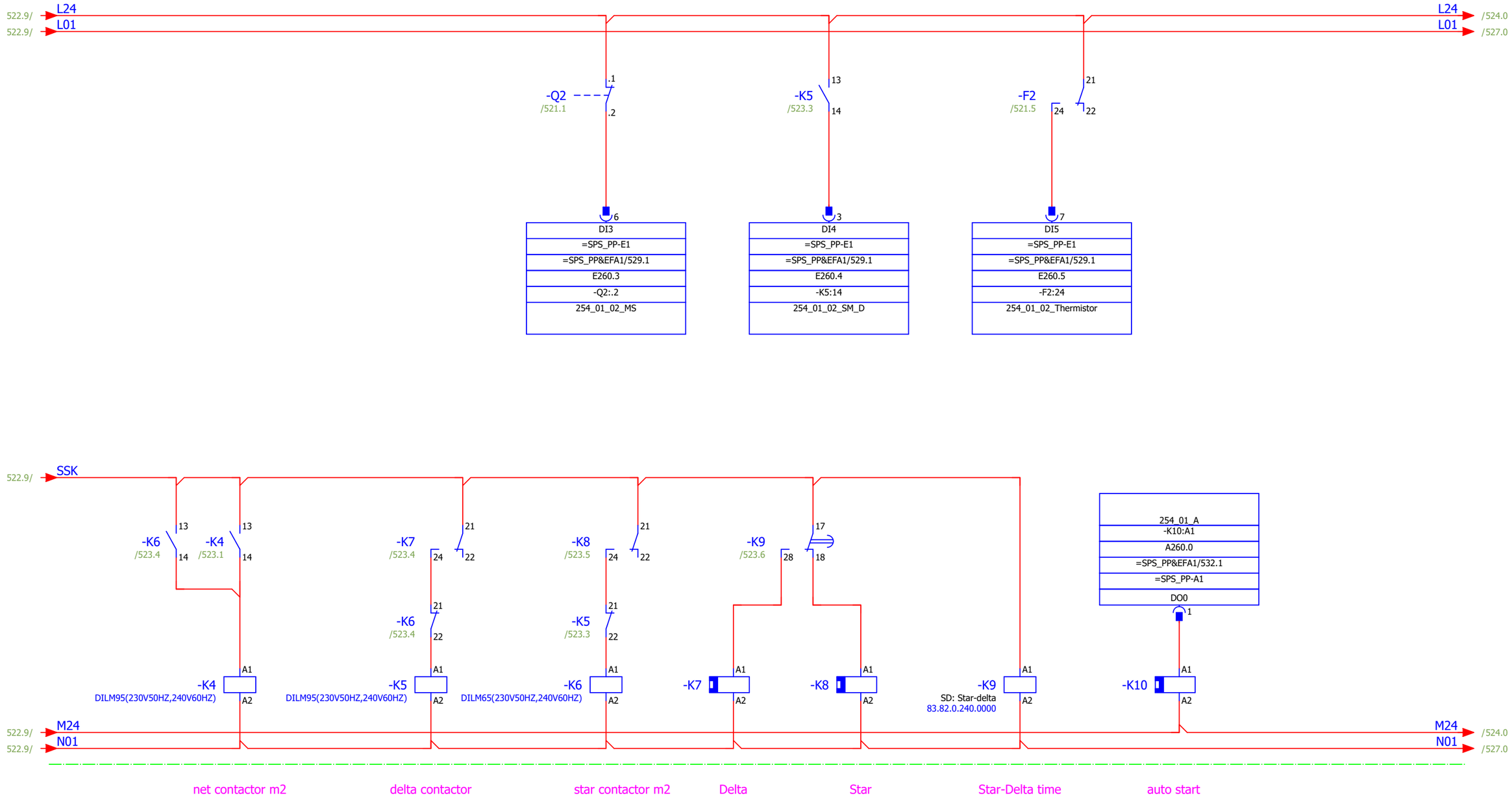

522 524

			Date	12.12.2019	Mixed feed plant Golden Poultry	BEYTEC ... your gateway to success	control circuit press 1	= 254	
			Ed.	willen				+ PP21	
			Appr		pellet press 1			1 : 1 Part II	Page 523
Modification	Date	Name	Original	V:\EPLAN\Projekte\Company\Replace\Beytec\2018\Feed Mill Alssad.elk	Replaced by				Page 605

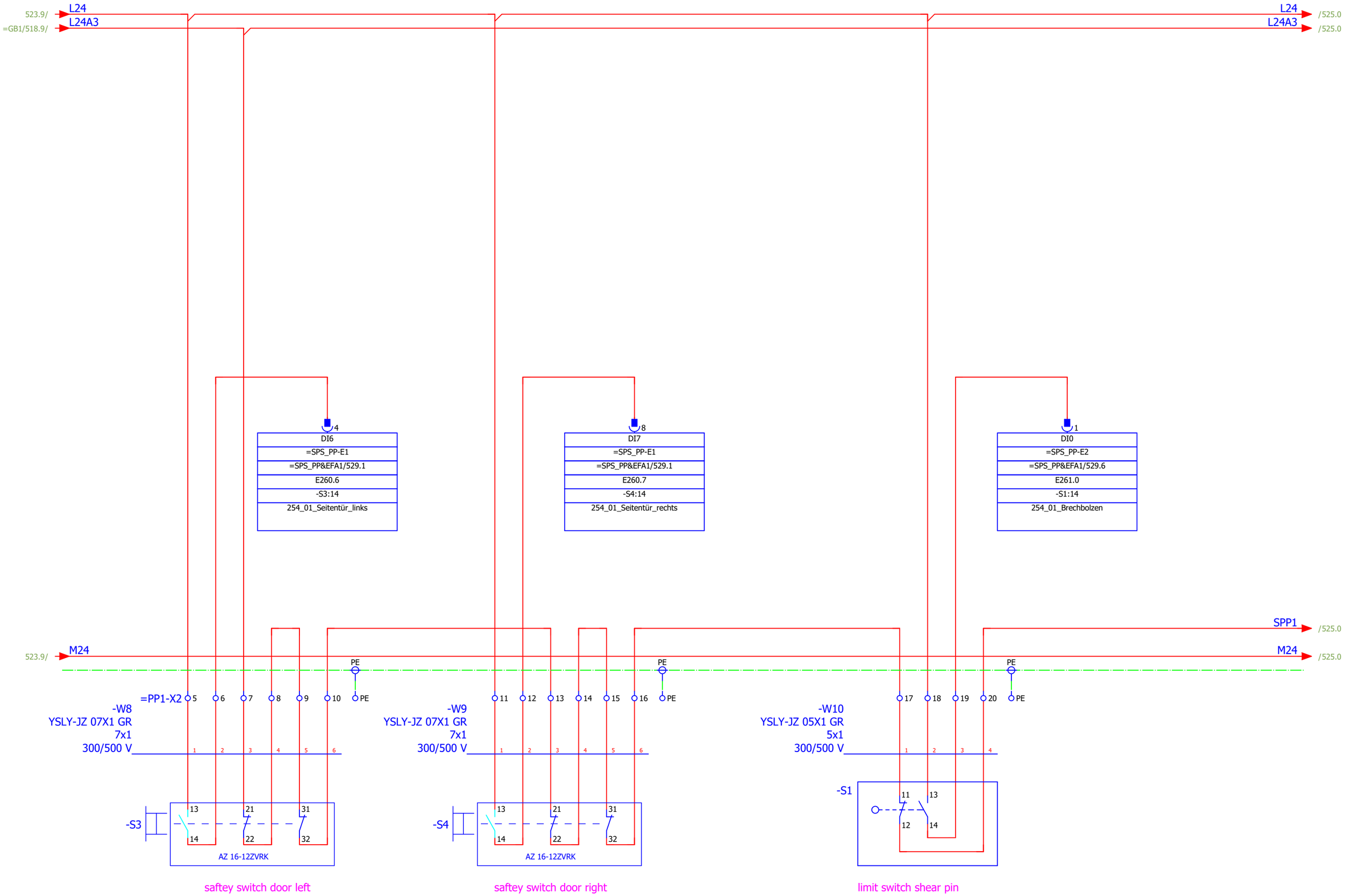

523 525

			Date	12.12.2019	Mixed feed plant Golden Poultry	BEYTEC ... your gateway to success	saftey circuit press 1	= 254	
			Ed.	willen				+ PP21	
			Appr		pellet press 1			1 : 1 Part II	Page 524
Modification	Date	Name	Original	V:\EPLAN\Projekte\Company\Replace\Beytec\2018\Feed Mill Alssad.elk	Replaced by				Page 605

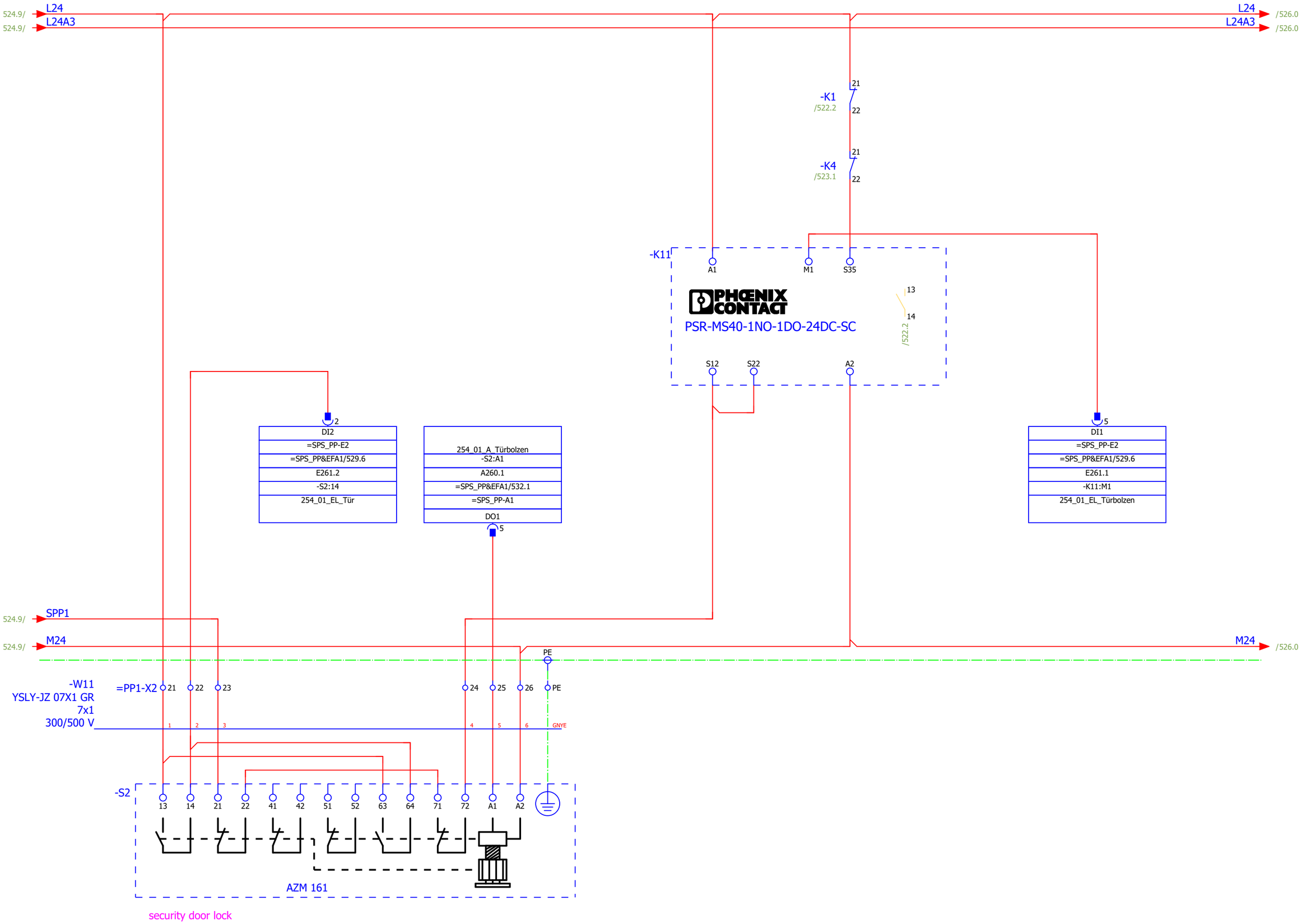

524

526

			Date	12.12.2019	Mixed feed plant Golden Poultry	BEYTEC ... your gateway to success	saftey circuit press 1	= 254	
			Ed.	willen				+ PP21	
			Appr		pellet press 1			1 : 1 / Part II	Page 525
Modification	Date	Name	Original	V:\EPLAN\Projekte\Company\Replace\Beytec\2018\Feed Mill Alssad.elk	Replaced by				Page 605

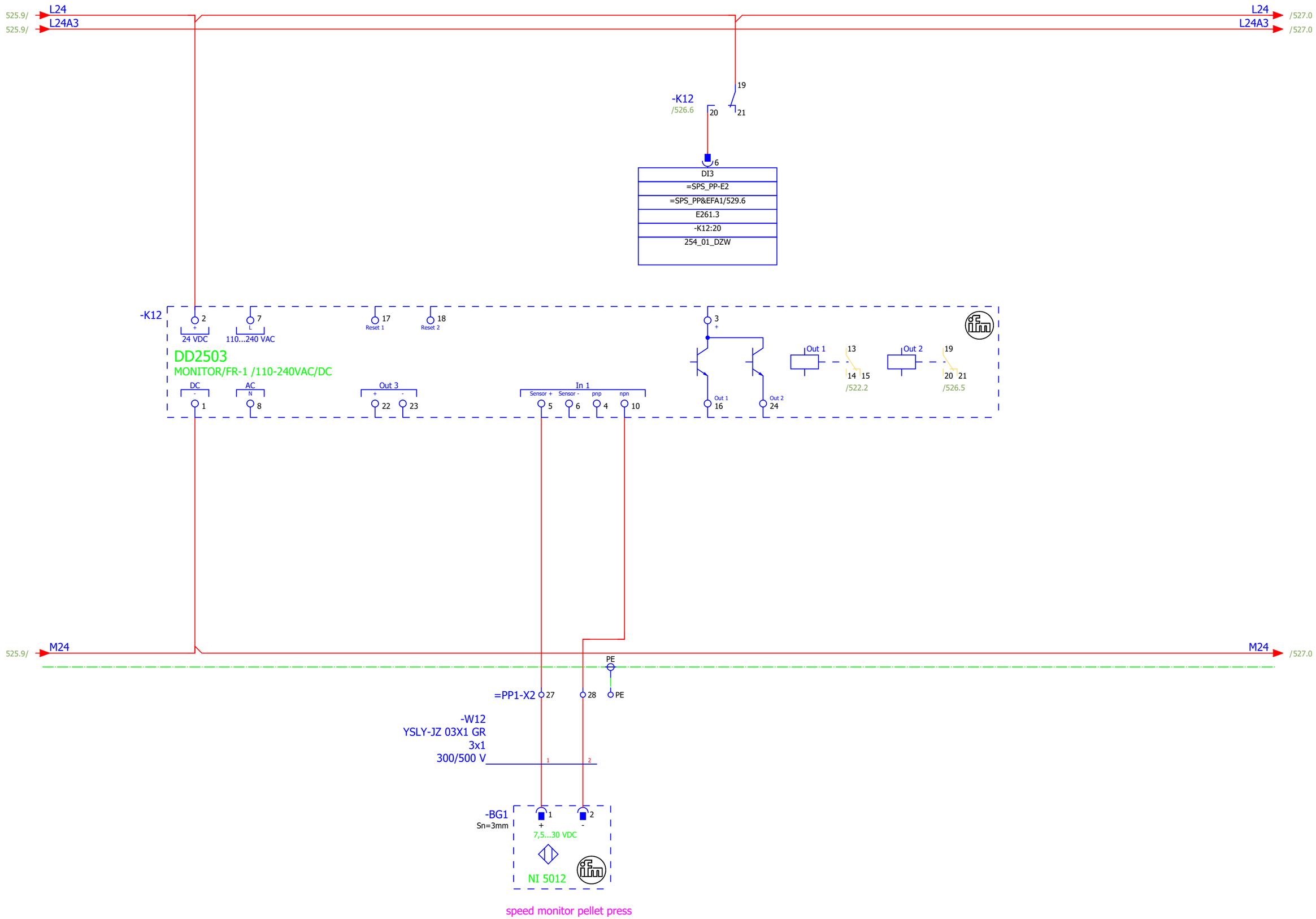

speed monitor pellet press

525 527

			Date	12.12.2019	Mixed feed plant Golden Poultry	BEYTEC ... your gateway to success	saftey circuit press 1	= 254	
			Ed.	willen				+ PP21	
			Appr		pellet press 1			1 : 1 / Part II	Page 526
Modification	Date	Name	Original	V:\EPLAN\Projekte\Company\Replace\Beytec\2018\Feed Mill Alssad.elk	Replaced by				Page 605

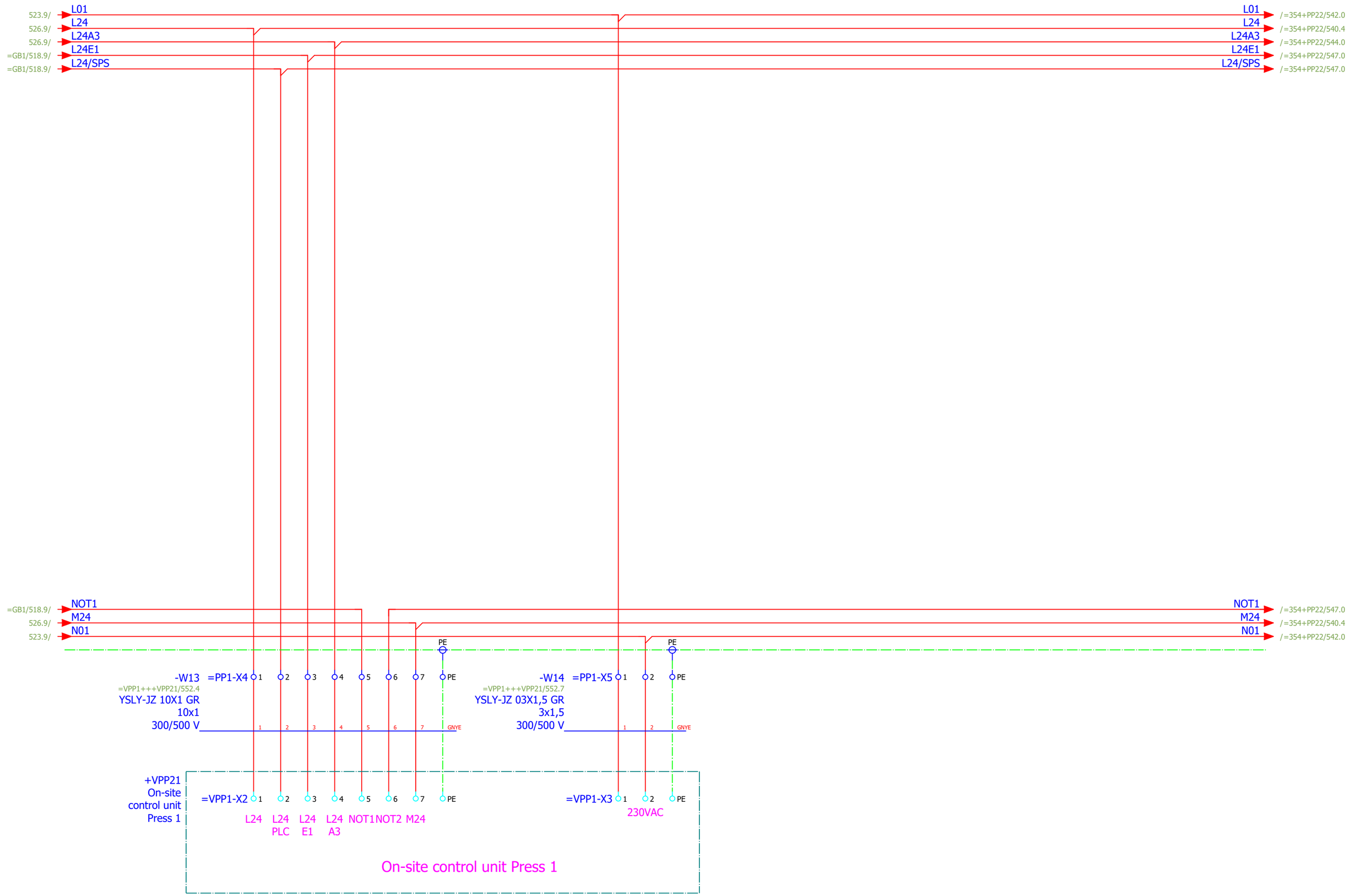

=.3++A1+F25/159

			Date	12.12.2019	Mixed feed plant Golden Poultry	BEYTEC ... your gateway to success	power supply VPP1	= 254	
			Ed.	willen				+ PP21	
			Appr		pellet press 1			1 : 1 Part II	Page 527
Modification	Date	Name	Original	V:\EPLAN\Projekte\Company\Beytec\2018\Feed Mill Alssad.elk	Replaced by				Page 605

Replaced by

-K1
&ETC/535.2

ET200S SIEMENS
IM 151-1 STANDARD

-X1: DP &EFS/533.6

-X20:1 1L+ &EFS/533.3
-X20:2 2L+ &EFS/533.4
-X20:3 1M &EFS/533.5
-X20:4 2M &EFS/533.6

6ES7151-1AA06-0AB0

-K2
&ETC/535.3

ET200S SIEMENS
PM-E DC 24V

2 DC24V &EFS/534.1
3 M &EFS/534.1
A4 AUX1 &EFS/534.4

6 DC24V &EFS/534.2
7 M &EFS/534.2
A8 AUX1 &EFS/534.4

6ES7138-4CA01-0AA0
+ TM-P15C23-A0

-K3
&ETC/535.6

ET200S SIEMENS
PM-E DC 24V

2 DC24V &EFS/534.5
3 M &EFS/534.6
A4 AUX1 &EFS/534.8

6 DC24V &EFS/534.6
7 M &EFS/534.7
A8 AUX1 &EFS/534.8

6ES7138-4CA01-0AA0
+ TM-P15C23-A0

-E1
&ETC/535.4

ET200S SIEMENS
8 DI DC 24 S

E260.0	1 DI0	=254&EFS/522+6254-Q1:.2	254_01_01_MS
E260.2	2 DI2	=254&EFS/522+8254-F1:24	254_01_01_Thermistor
E260.4	3 DI4	=254&EFS/523+5254-K5:14	254_01_02_SM_D
E260.6	4 DI6	=254&EFS/524+7254-S3:14	254_01_Seitentür_links

E260.1	5 DI1	=254&EFS/522+7254-K2:14	254_01_01_SM_D
E260.3	6 DI3	=254&EFS/523+4254-Q2:.2	254_01_02_MS
E260.5	7 DI5	=254&EFS/523+6254-F2:24	254_01_02_Thermistor
E260.7	8 DI7	=254&EFS/524+4254-S4:14	254_01_Seitentür_rechts

6ES7131-4BF00-0AA0
+ TM-E15C24-01

-E2
&ETC/535.4

ET200S SIEMENS
8 DI DC 24 V

E261.0	1 DI0	=254&EFS/524+7254-S1:14	254_01_Brechbolzen
E261.2	2 DI2	=254&EFS/525+2254-S2:14	254_01_EL_Tür
E261.4	3 DI4	=354+PP22&EFS/5421+PP22-Q1:.2	354_01_01_MS
E261.6	4 DI6	=354+PP22&EFS/5421+PP22-F1:24	354_01_01_Thermistor

E261.1	5 DI1	=254&EFS/525+8254-K11:M1	254_01_EL_Türbolzen
E261.3	6 DI3	=254&EFS/526+5254-K12:20	254_01_DZW
E261.5	7 DI5	=354+PP22&EFS/5421+PP22-K2:14	354_01_01_SM_D
E261.7	8 DI7	=354+PP22&EFS/5431+PP22-Q2:.2	354_01_02_MS

6ES7131-4BF00-0AA0
+ TM-E15C24-01

			Date	12.12.2019	Mixed feed plant Golden Poultry	BEYTEC ... your gateway to success	overview inputs		= SPS_PP
			Ed.	willen	pellet press 1				+ PP21
			Appr				1 : 1	Part II	Page 529
Modification	Date	Name	Original	V:\EPLAN\Projekte\Company\Beytec\2018\Feed Mill Alssad.elk	Replaced by				Page 605

-E3
&ETC/535.4

ET200S SIEMENS
8 DI DC 24 V

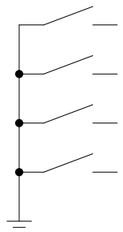

E262.0	1 DI0	=354+PP22&EFS/3543-PP22-K5:14	354_01_02_SM_D
E262.2	2 DI2	=354+PP22&EFS/3544-PP22-S3:14	354_01_Seitentür_links
E262.4	3 DI4	=354+PP22&EFS/3544-PP22-S1:14	354_01_Brechbolzen
E262.6	4 DI6	=354+PP22&EFS/3545-PP22-S2:14	354_01_EL_Tür

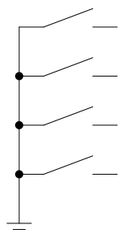

E262.1	5 DI1	=354+PP22&EFS/3543-PP22-F2:24	354_01_02_Thermistor
E262.3	6 DI3	=354+PP22&EFS/3544-PP22-S4:14	354_01_Seitentür_rechts
E262.5	7 DI5	=354+PP22&EFS/3545-PP22-K11:M1	354_01_EL_Türbolzen
E262.7	8 DI7	=354+PP22&EFS/3546-PP22-K12:20	354_01_DZW

6ES7131-4BF00-0AA0
+ TM-E15C24-01

-E4
&ETC/535.5

ET200S SIEMENS
8 DI DC 24 V

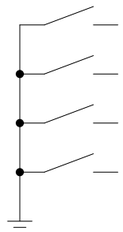

E263.0	1 DI0	=254&EFS/522-PP22-GB1-B1:14	Allg_Phasen_254_01_OK
E263.2	2 DI2		Spare
E263.4	3 DI4		Spare
E263.6	4 DI6		Spare

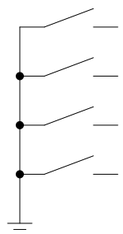

E263.1	5 DI1	=354+PP22&EFS/3512-PP22-B1:14	Allg_Phasen_354_01_OK
E263.3	6 DI3		Spare
E263.5	7 DI5		Spare
E263.7	8 DI7		Spare

6ES7131-4BF00-0AA0
+ TM-E15C24-01

-PEW1
&ETC/535.5

ET200S SIEMENS
2 AI U STANDARD

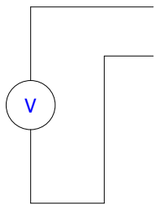

PEW354
1 M+ =254&EFS/520.7 =254-T2:10 254_01_01_AE_IW_I
2 M- =254&EFS/520.8
3 n.c.
4 n.c.

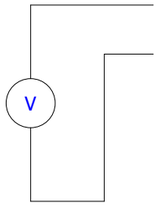

PEW356
5 M+ =254&EFS/521.7 =254-T4:10 254_01_02_AE_IW_I
6 M- =254&EFS/521.8
7 n.c.
8 n.c.

6ES7134-4FB01-0AB0
+ TM-E15C24-01

-PEW2
&ETC/535.6

ET200S SIEMENS
2 AI U STANDARD

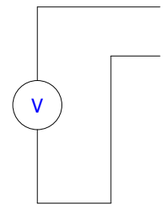

PEW358
1 M+ =354+PP22&EFS/540.7 =354+PP22-T2:10 354_01_01_AE_IW_I
2 M- =354+PP22&EFS/540.8
3 n.c.
4 n.c.

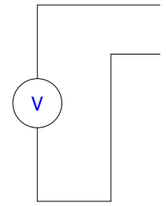

PEW360
5 M+ =354+PP22&EFS/541.7 =354+PP22-T4:10 354_01_02_AE_IW_I
6 M- =354+PP22&EFS/541.8
7 n.c.
8 n.c.

6ES7134-4FB01-0AB0
+ TM-E15C24-01

			Date	12.12.2019	Mixed feed plant Golden Poultry	BEYTEC ... your gateway to success	overview analog inputs		= SPS_PP	
			Ed.	willen					+ PP21	
			Appr		pellet press 1			1 : 1	Part II	Page 531
Modification	Date	Name	Original	V:\EPLAN\Projekte\Company\Beytec\2018\Feed Mill Alssad.elk	Replaced by					Page 605

-A1
&ETC/535.6

ET200S SIEMENS
8 DO DC24V 0,5A

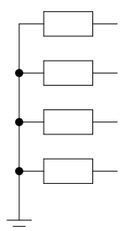

A260.0 1/QX.0/DO0	1 DO0	=254&EFS/523=254-K10:A1	254_01_A
A260.2 2/QX.2/DO2	2 DO2	=354+PP22&EFS/543=PP22-K10:A1	354_01_A
A260.4 3/QX.4/DO4	3 DO4		Spare
A260.6 4/QX.6/DO6	4 DO6		Spare

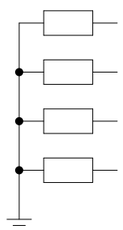

A260.1 5/QX.1/DO1	5 DO1	=254&EFS/525=254-S2:A1	254_01_A_Türbolzen
A260.3 6/QX.3/DO3	6 DO3	=354+PP22&EFS/545=PP22-S2:A1	354_01_A_Türbolzen
A260.5 7/QX.5/DO5	7 DO5		Spare
A260.7 8/QX.7/DO7	8 DO7		Spare

6ES7132-4BF00-0AA0
+ TM-E15C24-01

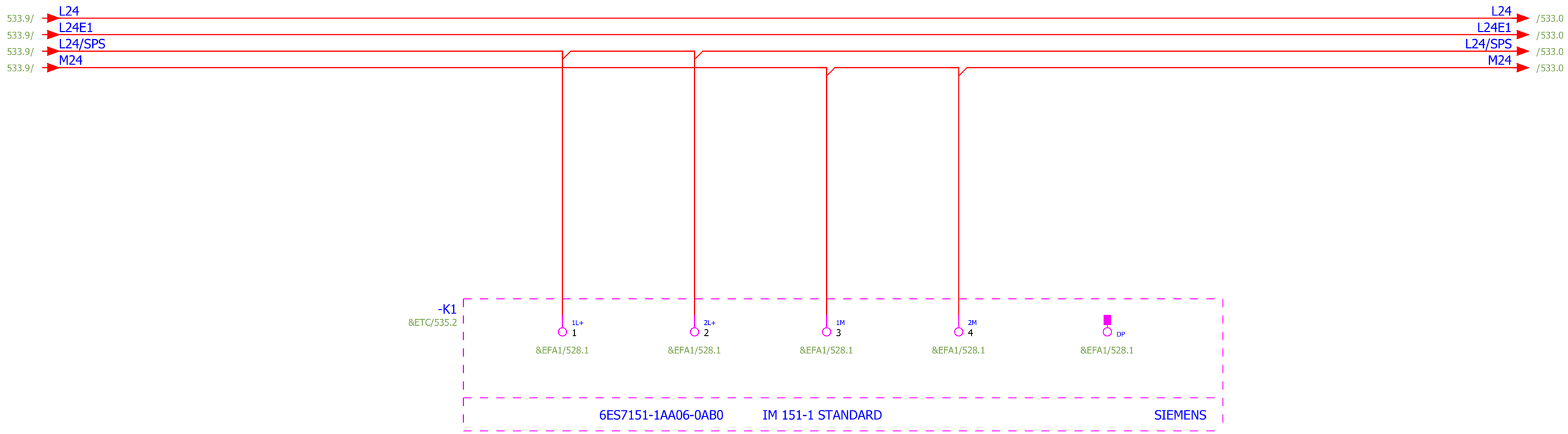
533.9/
L24
L24E1
L24/SPS
M24
L24
L24E1
L24/SPS
M24
/533.0
-K1
&ETC/535.2
1L+
1
2L+
2
1M
3
2M
4
DP
&EFA1/528.1
6ES7151-1AA06-0AB0
IM 151-1 STANDARD
SIEMENS

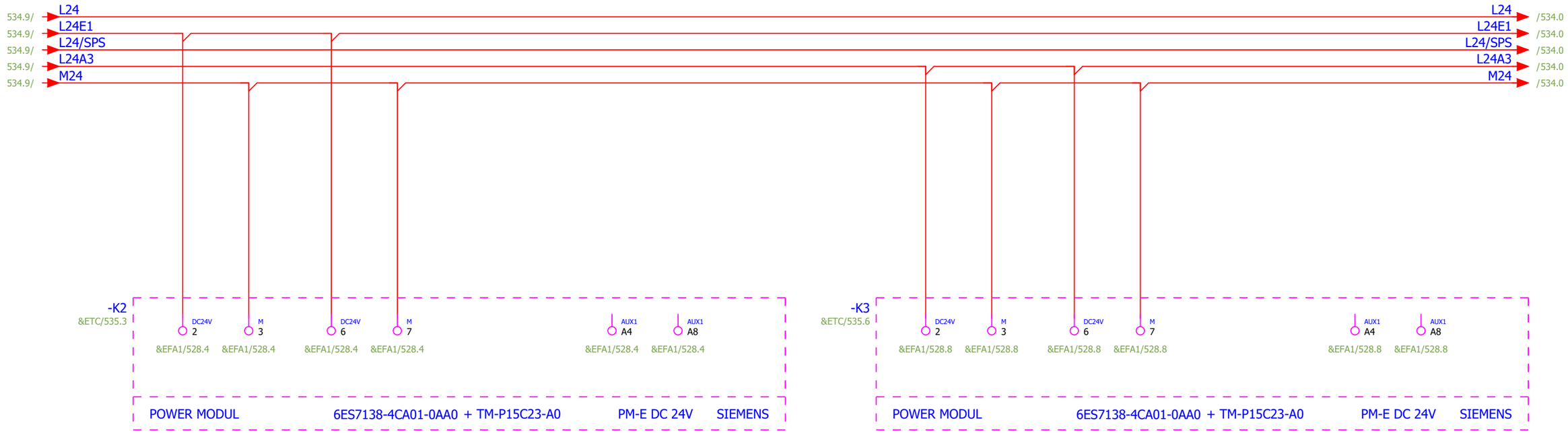

			Date	12.12.2019	Mixed feed plant Golden Poultry	BEYTEC ... your gateway to success	PLC power supply power module		= SPS_PP	
			Ed.	willen					+ PP21	
			Appr		pellet press 1			1 : 1	Part II	Page 534
Modification	Date	Name	Original	V:\EPLAN\Projekte\Company\Alsad\Beytec\2018\Feed Mill Alssad.elk	Replaced by					Page 605

Replaced by

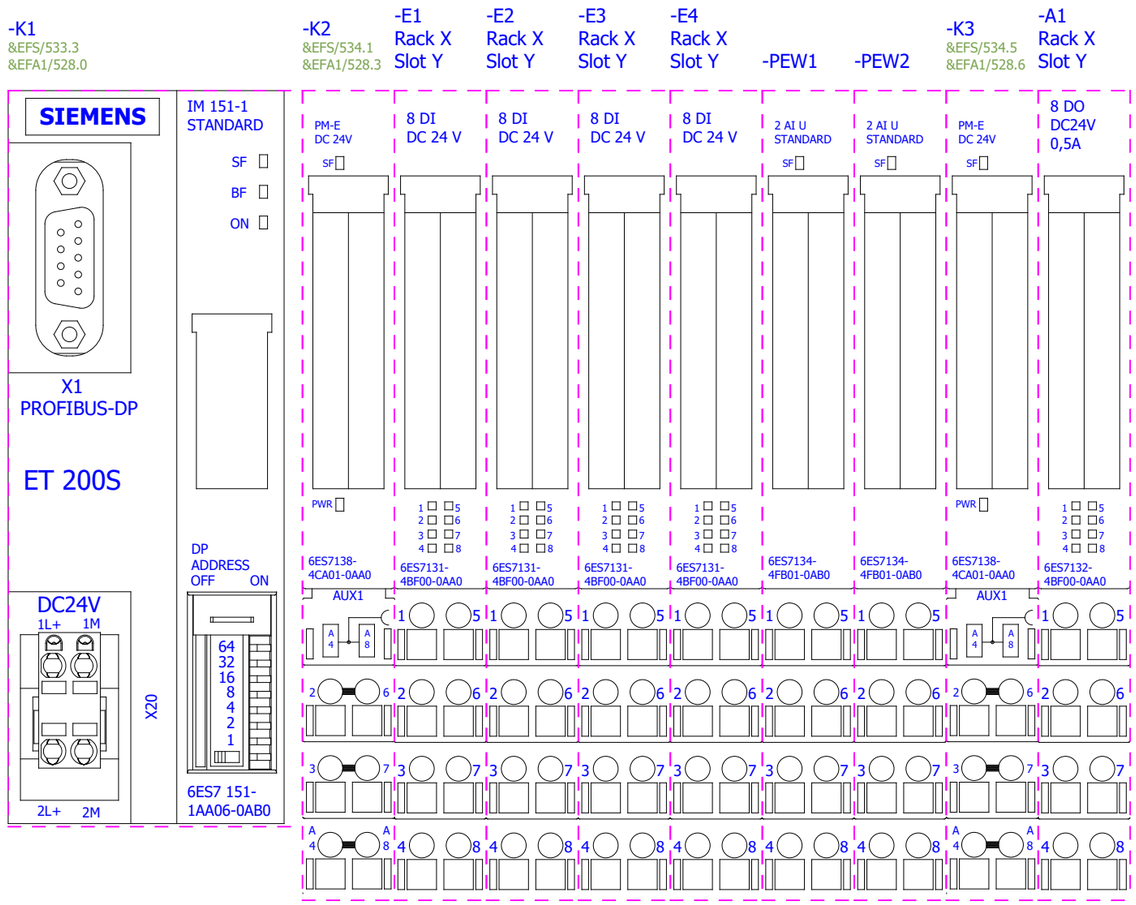
-K1
&EFS/533.3
&EFA1/528.0
-K2
&EFS/534.1
&EFA1/528.3
-E1
Rack X
Slot Y
-E2
Rack X
Slot Y
-E3
Rack X
Slot Y
-E4
Rack X
Slot Y
-PEW1
-PEW2
-K3
&EFS/534.5
&EFA1/528.6
-A1
Rack X
Slot Y
SIEMENS
IM 151-1
STANDARD
SF
BF
ON
X1
PROFIBUS-DP
ET 200S
DP
ADDRESS
OFF ON
64
32
16
8
4
2
1
6ES7 151-
1AA06-0AB0
DC24V
1L+ 1M
2L+ 2M
X20
PM-E
DC 24V
8 DI
DC 24 V
2 AI U
STANDARD
8 DO
DC24V
0,5A
PWR
6ES7138-
4CA01-0AA0
6ES7131-
4BF00-0AA0
6ES7134-
4FB01-0AB0
6ES7132-
4BF00-0AA0
AUX1

BEYTEC

... your gateway to success

Company / customer	BeyTec
Project description	Golden Poultry
Job number	Part II
Mounting location	pellet press 2

Technical data:

Operating voltage	400 V
Operating frequency	50 Hz
Operating current	
Power network	
Control voltage	24VDC
Protection class electrical	SK I
Degree of protection	IP54
Responsible for project	Willen

Created on	21.10.2019		
Edit date	12.12.2019	by (short name) willen	Number of pages 605

Table of contents

Column X: An automatically generated page was edited

F06_001_EN

Page	Page description	supplementary page field	Date	Edited by	X
++A2+PP22&BAA/536	Title page / cover sheet		12.12.2019	willen	X
++A2+PP22&BAB/537	Table of contents : ++A2+PP22&BAA/536 - =354++A2+PP22&EFS/547		12.12.2019	willen	
++A2+PP22&BPA/538	Summarized parts list : ABB.1SVR730824R9300 - PXC.2814359		12.12.2019	willen	X
=GB1++A2+PP22&EFS/539	Power supply		12.12.2019	willen	
=354++A2+PP22&EFS/540	load circuit pellet press 2 M1		12.12.2019	willen	
=354++A2+PP22&EFS/541	load circuit pellet press 2 M2		12.12.2019	willen	
=354++A2+PP22&EFS/542	control circuit press 2		12.12.2019	willen	
=354++A2+PP22&EFS/543	control circuit press 2		12.12.2019	willen	
=354++A2+PP22&EFS/544	saftey circuit press 2		12.12.2019	willen	
=354++A2+PP22&EFS/545	saftey circuit press 2		12.12.2019	willen	
=354++A2+PP22&EFS/546	saftey circuit press 2		12.12.2019	willen	
=354++A2+PP22&EFS/547	power supply VPP2		12.12.2019	willen	

Summarized parts list

F02_002_en_US

Order number	Quantity	Designation	Type number	Supplier
1SVR730824R9300	1	CM-PFS.S Three-phase monitoring relay	CM-PFS.S	
09916109	1	LS-Schalter B6A / 3pol	DLS6iB06-3	DOEPKE
266017	1	Switch-disconnector 3p, 400A	PN3-400	ETN
2702226	1	LED enclosure light	PLD E 608 W 315/F	PXC
NI 5012	1	????	IIA2010-N/10M/1D/1G/2G	IFM
T221761	2	MS220K, PTC-resistor trip device, AC/DC24V	MS220K	ZIEHL
239480	4	Contactor, 3p, 45kW/400V/AC3	DILM95(230V50HZ,240V60HZ)	ETN
277946	2	Auxiliary contact module, 1N/O+1N/C	DILM150-XHI11	ETN
101486	2	Secondary terminal wire kit, star-delta, DILM80-95	DILM95-XSL	ETN
277949	3	Auxiliary contact module, 3N/O+1N/C	DILM150-XHI31	ETN
277894	2	Contactor, 3p, 30kW/400V/AC3	DILM65(230V50HZ,240V60HZ)	ETN
277950	1	Auxiliary contact module, 2N/O+2N/C	DILM150-XHI22	ETN
2903331	2	????	RIF-1-RPT-LV-230AC/2X21	PHOENIX
83.82.0.240.0000	1	Modular timer, Star-delta (SD) - AC (50/60 Hz)/DC - 24...240 V	83.82.0.240.0000	FINDER
2903370	1	????	RIF-0-RPT-24DC/21	PHOENIX
2904954	1	Safety relays	PSR-MS40-1NO-1DO-24DC-SC	PXC
DD2503	1	MONITOR	MONITOR/FR-1 /110-240VAC/DC	IFM
	0			
265725	2	Circuit-breaker, 3p, 200A	NZMN2-M200	EATON
216376	2	Contact element, 1N/O, front mount, 6. contact, screw connection	M22-K10	EATON
216378	2	Contact element, 1 N/C, front mount, 6. contact, screw connection	M22-K01	EATON
281666	2	Anschluss, rückseitig, 3,5mm, 3p	NZM2-XKR4	ETN
2277271	2	Current transformer	PACT MCR-V2- 3015- 60	PXC
2814359	2	Current transducers	MCR-SLP-1-5-UI-0	PHOENIX

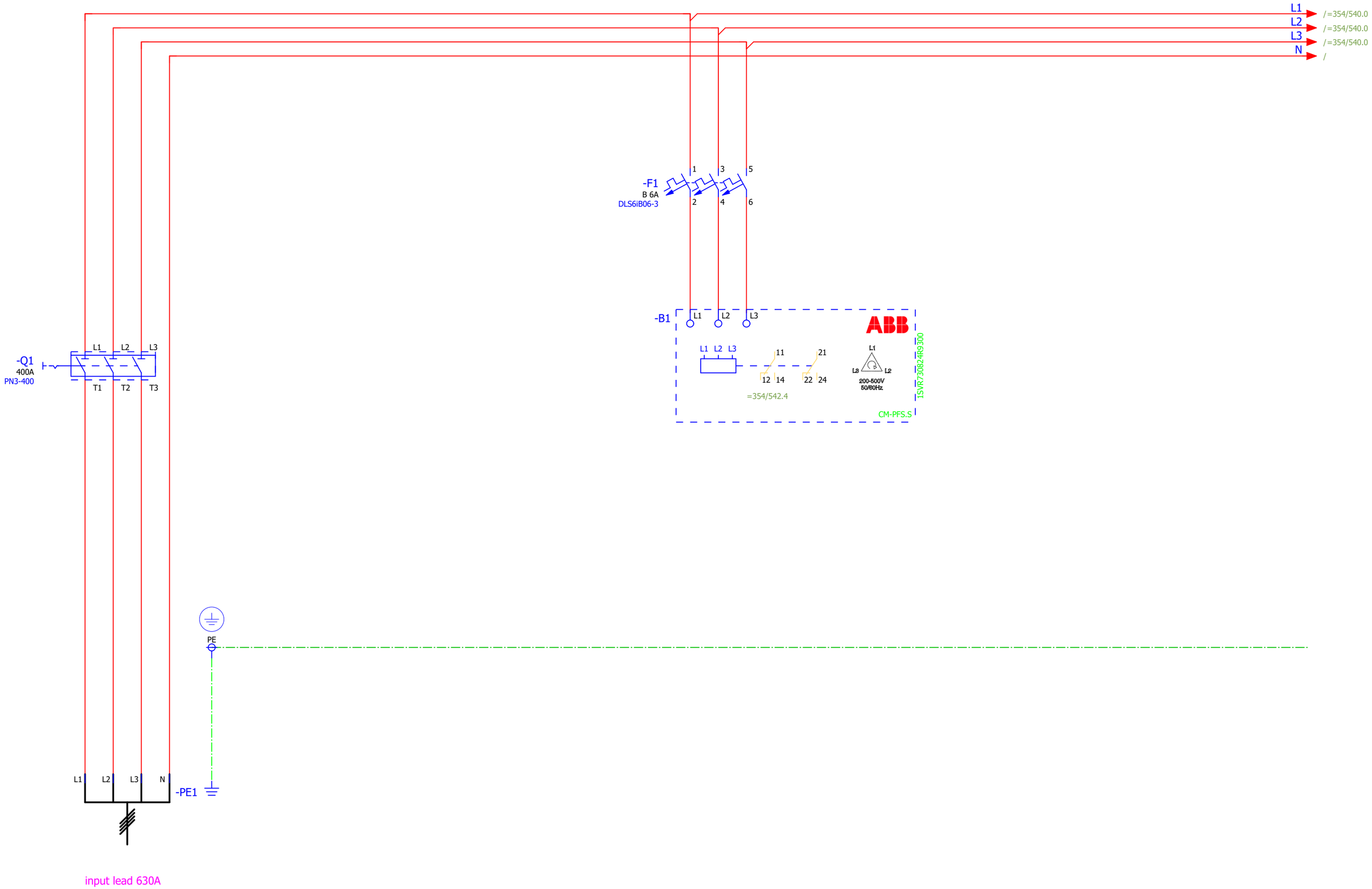
L1
L2
L3
N
/=354/540.0
/=354/540.0
/=354/540.0
/
-F1
B 6A
DLS6iB06-3
1
3
5
2
4
6
-B1
L1
L2
L3
ABB
L1 L2 L3
11
21
12 14
22 24
=354/542.4
L1
L3
L2
200-500V
50/60Hz
1SVR730824R9300
CM-PFS.S
-Q1
400A
PN3-400
L1
L2
L3
T1
T2
T3
PE
L1
L2
L3
N
-PE1
input lead 630A

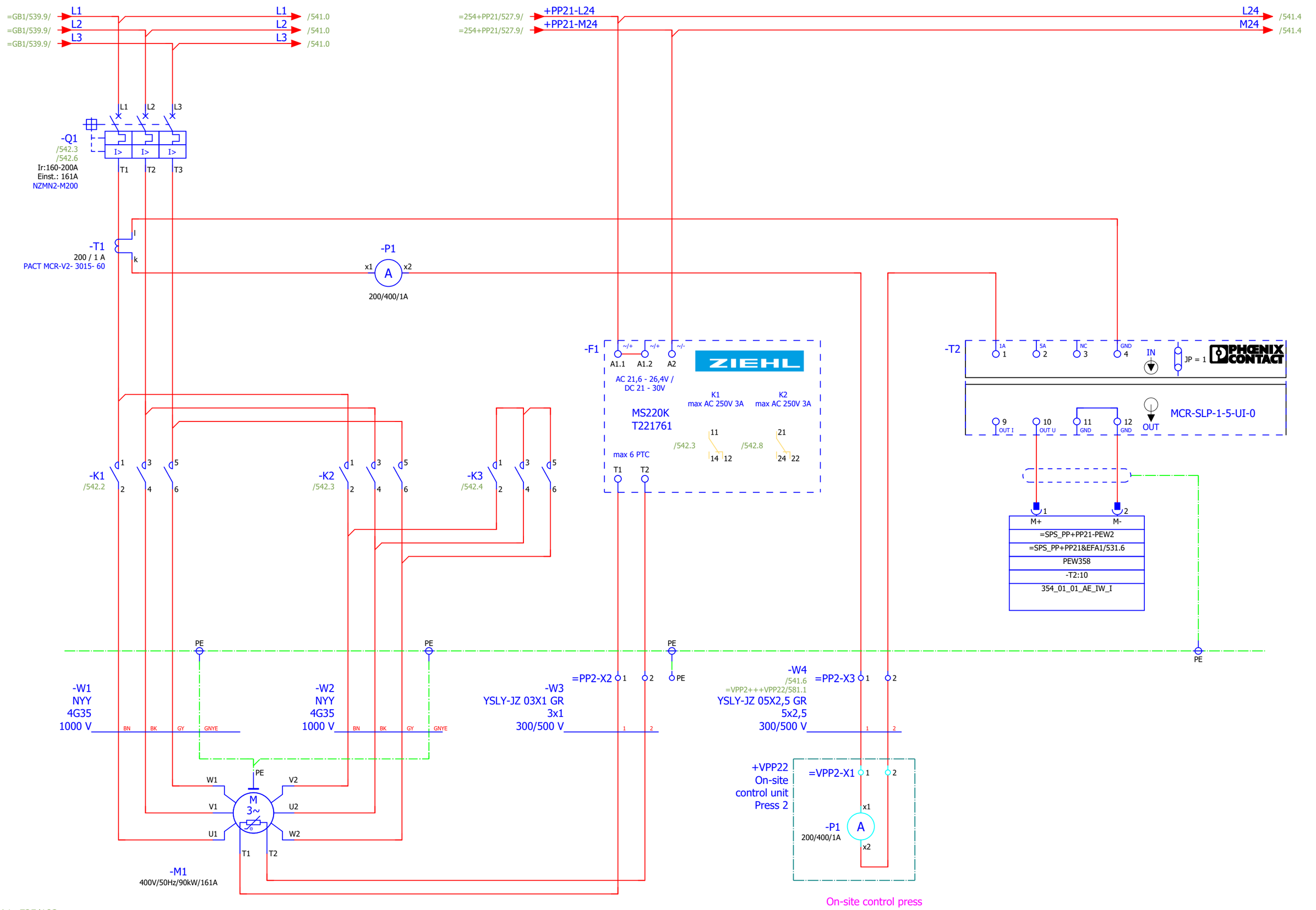

=352++A1+F25/183

541

			Date	12.12.2019	Mixed feed plant Golden Poultry	BEYTEC ... your gateway to success	load circuit pellet press 2 M1	= 354	
			Ed.	willen				+ PP22	
			Appr		pellet press 2			1 : 1	Part II
Modification	Date	Name	Original	V:\EPLAN\Projekte\Company\Replace\Beytec\2018\Feed Mill Alssad.elk	Replaced by			Page 540	
								Page 605	

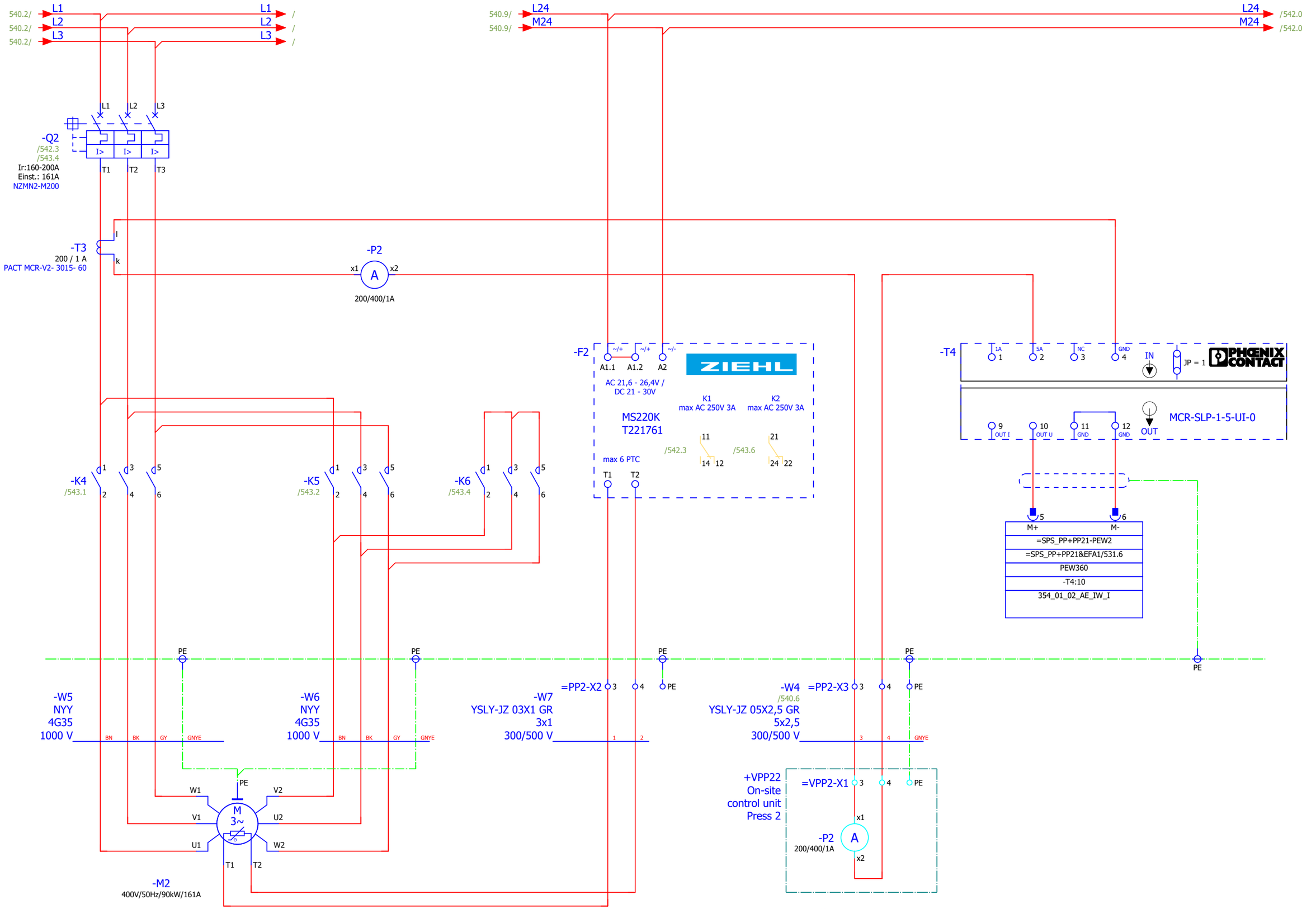

540 542

			Date	12.12.2019	Mixed feed plant Golden Poultry	BEYTEC ... your gateway to success	load circuit pellet press 2 M2	= 354
			Ed.	willen				+ PP22
			Appr		pellet press 2		1 : 1	Part II
Modification	Date	Name	Original	V:\EPLAN\Projekte\Company\Replace\Beytec\2018\Feed Mill Alssad.elk	Replaced by			Page 541 / Page 605

Replace Beytec

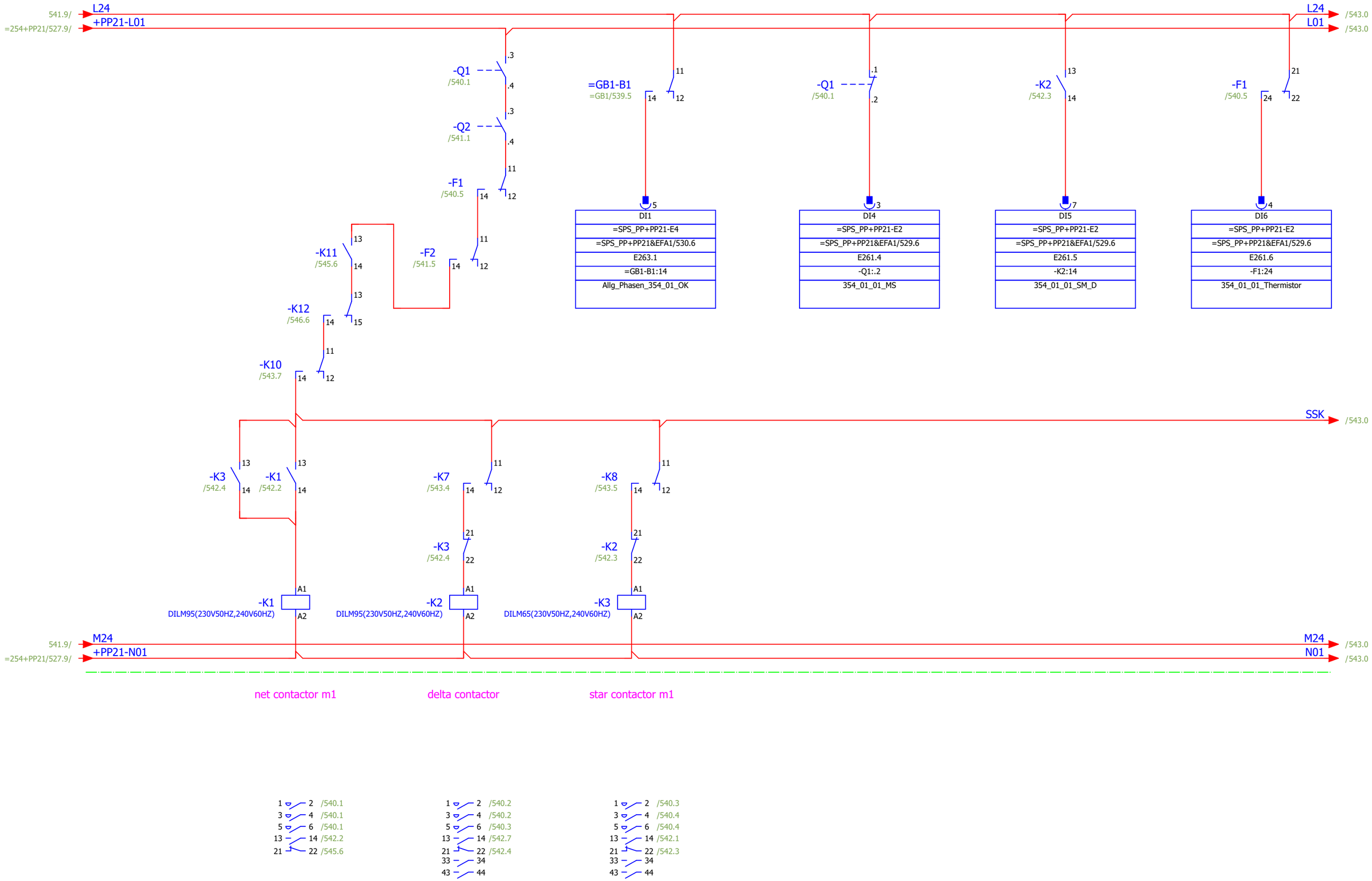

541 543

			Date	12.12.2019	Mixed feed plant Golden Poultry	BEYTEC ... your gateway to success	control circuit press 2	= 354	
			Ed.	willen				+ PP22	
			Appr		pellet press 2			1 : 1 Part II	Page 542
Modification	Date	Name	Original	V:\EPLAN\Projekte\Company\Beytec\2018\Feed Mill Alssad.elk	Replaced by				Page 605

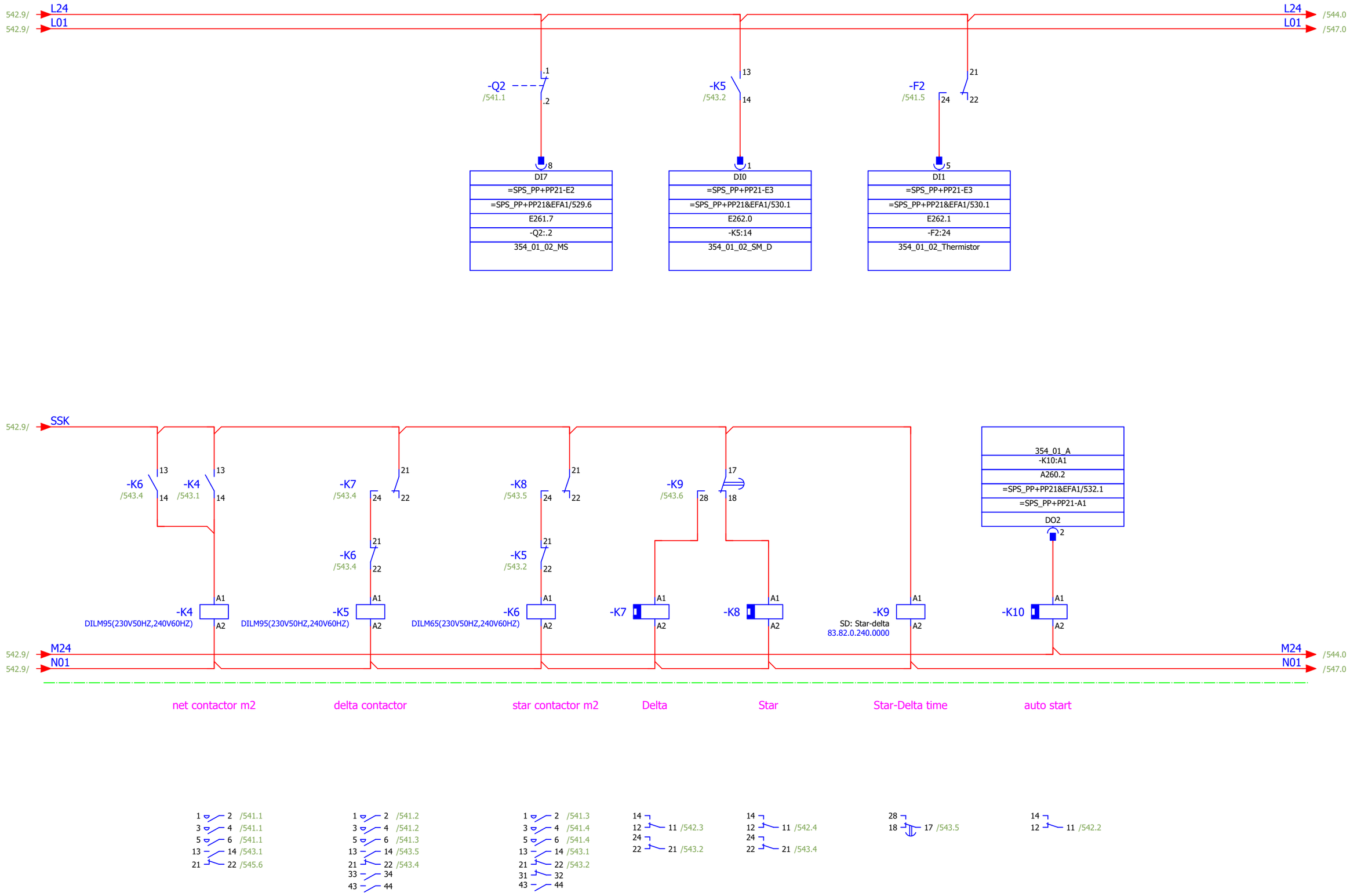

			Date	12.12.2019	Mixed feed plant Golden Poultry	BEYTEC	control circuit press 2		= 354
			Ed.	willen	pellet press 2	... your gateway to success			+ PP22
			Appr					1 : 1	Part II
Modification	Date	Name	Original	V:\EPLAN\Projekte\Company\Beytec\2018\Feed Mill Alssad.elk	Replaced by				Page 543
									Page 605

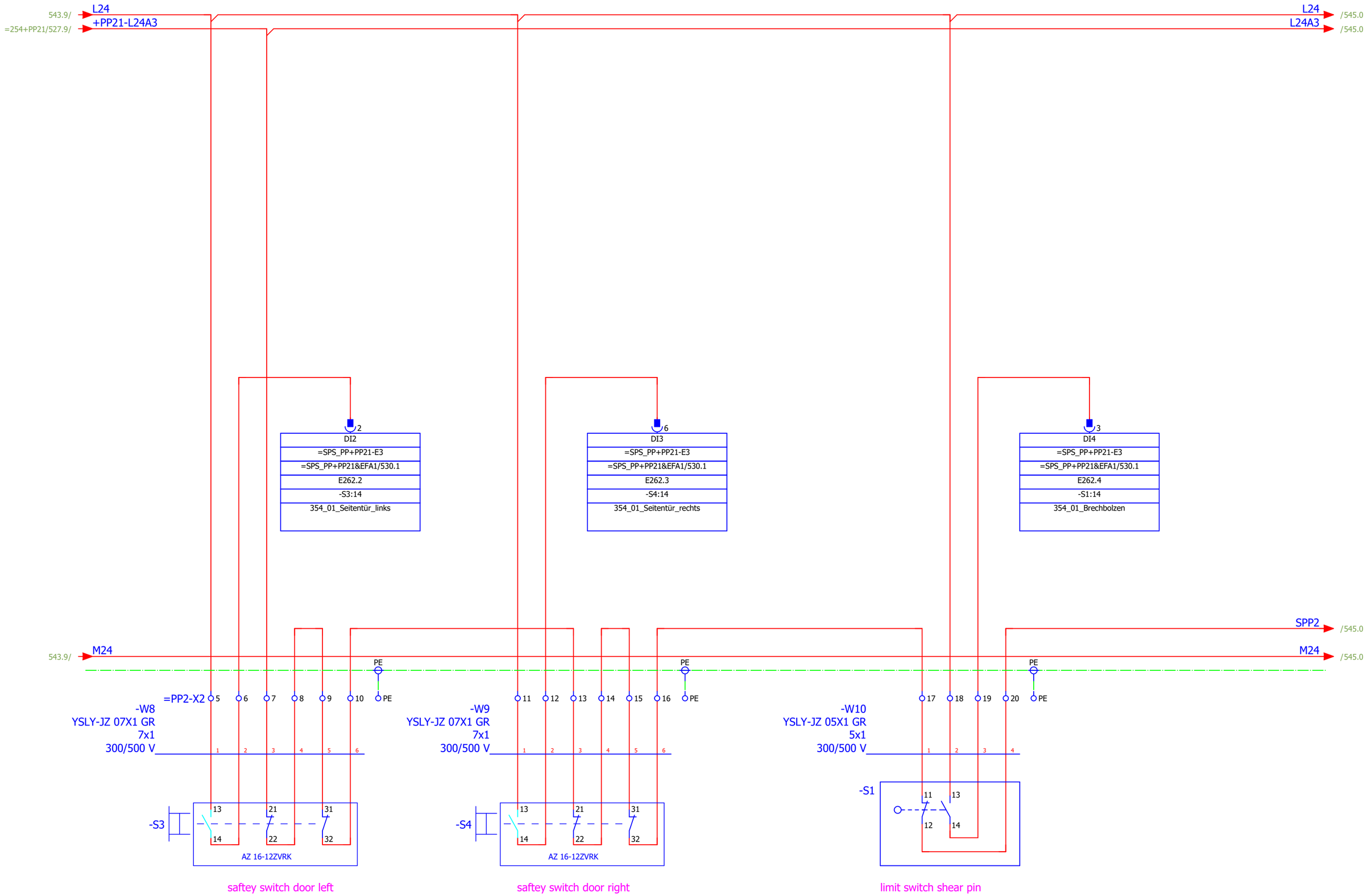

543

545

			Date	12.12.2019	Mixed feed plant Golden Poultry	BEYTEC ... your gateway to success	saftey circuit press 2	= 354	
			Ed.	willen				+ PP22	
			Appr		pellet press 2			1 : 1 / Part II	Page 544
Modification	Date	Name	Original	V:\EPLAN\Projekte\Company\Replace\Beytec\2018\Feed Mill Alssad.elk	Replaced by				Page 605

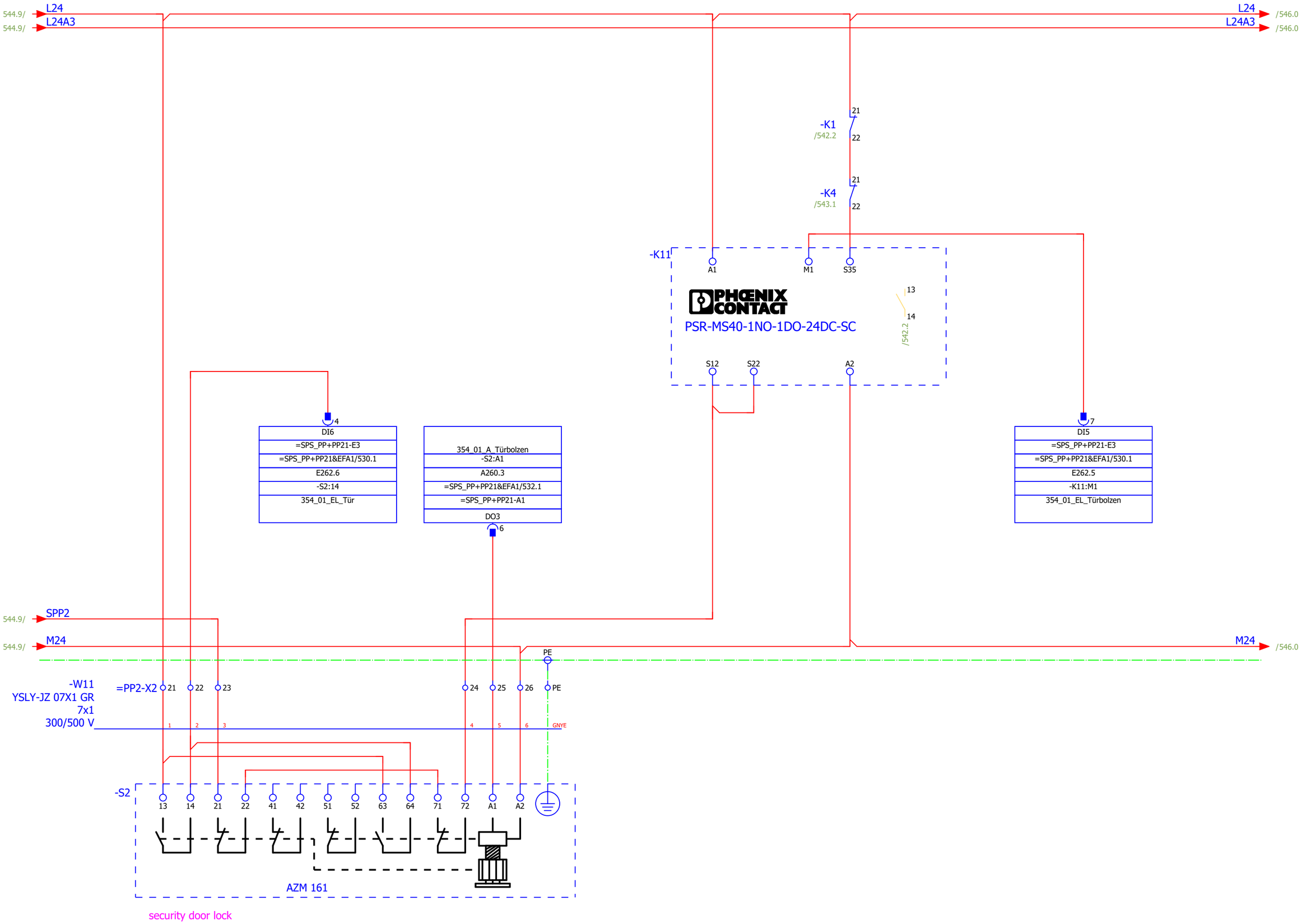

544

546

			Date	12.12.2019	Mixed feed plant Golden Poultry	BEYTEC ... your gateway to success	saftey circuit press 2	= 354	
			Ed.	willen				+ PP22	
			Appr		pellet press 2			1 : 1	Part II
Modification	Date	Name	Original	V:\EPLAN\Projekte\Company\Replace\Beytec\2018\Feed Mill Alssad.elk	Replaced by			Page 545	
								Page 605	

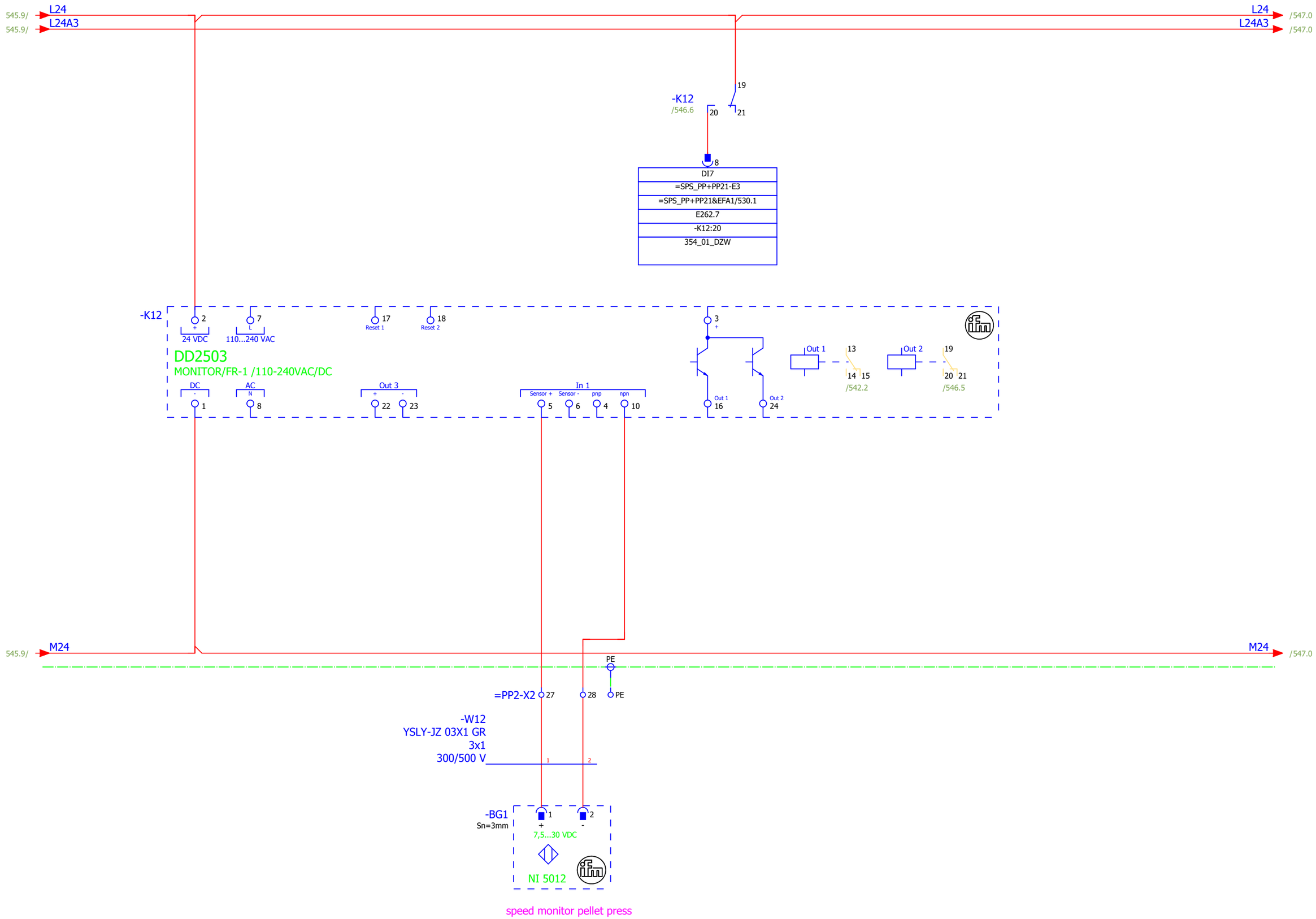

speed monitor pellet press

545 547

			Date	12.12.2019	Mixed feed plant Golden Poultry	BEYTEC ... your gateway to success	saftey circuit press 2	= 354	
			Ed.	willen				+ PP22	
			Appr		pellet press 2			1 : 1 / Part II	Page 546
Modification	Date	Name	Original	V:\EPLAN\Projekte\Company\Replace\Beytec\2018\Feed Mill Alssad.elk	Replaced by				Page 605

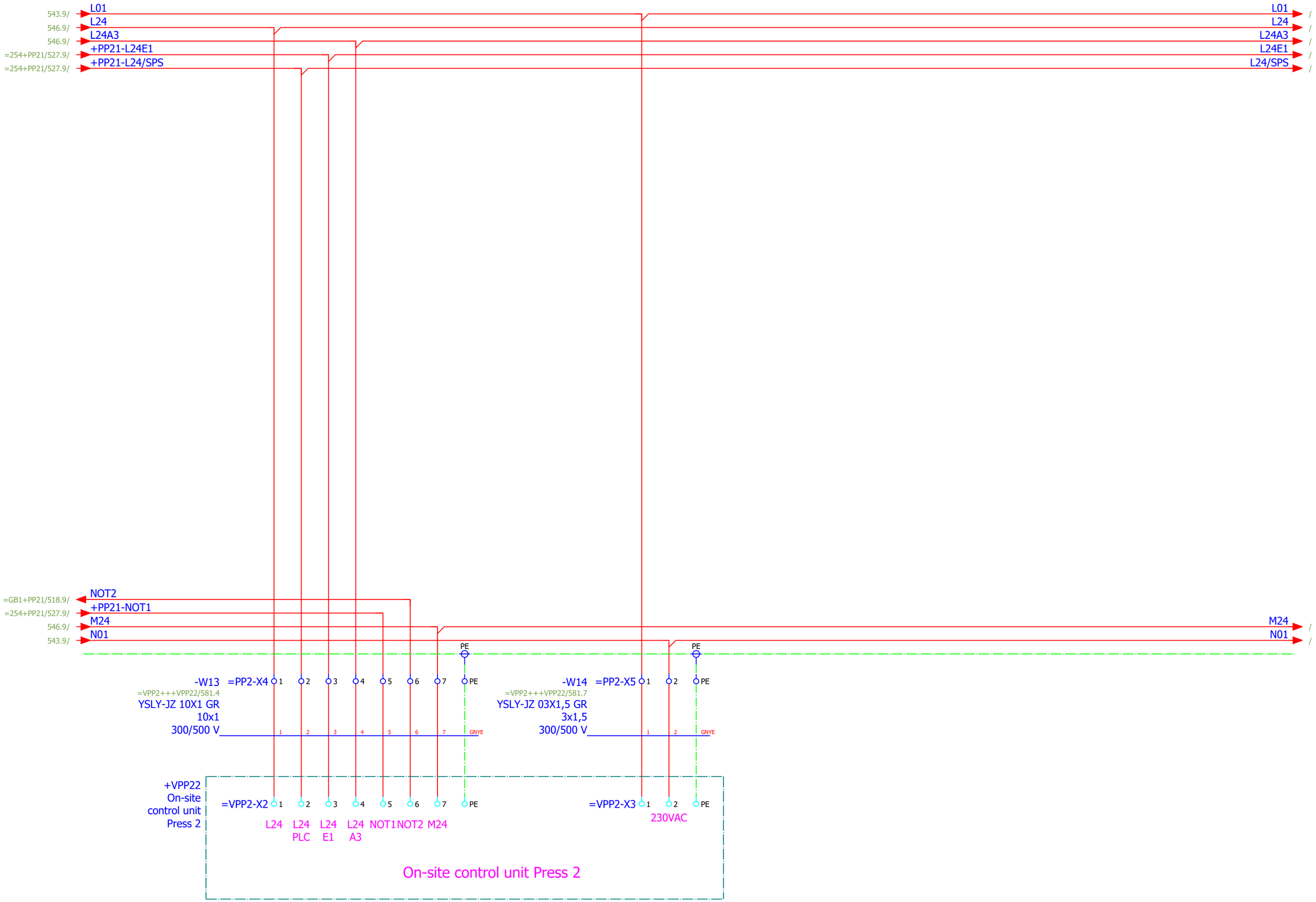

=.3++A1+F25/184

			Date	12.12.2019	Mixed feed plant Golden Poultry	BEYTEC ... your gateway to success	power supply VPP2	= 354	
			Ed.	willen				+ PP22	
			Appr		pellet press 2			1 : 1	Part II
Modification	Date	Name	Original	V:\EPLAN\Projekte\Company\Replace\Beytec\2018\Feed Mill Alssad.elk	Replaced by			Page 547	
								Page 605	

BEYTEC

... your gateway to success

Company / customer	BeyTec
Project description	Golden Poultry
Job number	Part II
Mounting location	On-site control unit Press 1

Technical data:

Operating voltage	400 V
Operating frequency	50 Hz
Operating current	
Power network	
Control voltage	24VDC
Protection class electrical	SK I
Degree of protection	IP54
Responsible for project	Willen

Created on 21.10.2019

Edit date 12.12.2019 by (short name) willen

Number of pages 605

Table of contents

Column X: An automatically generated page was edited

F06_001_EN

Page	Page description	supplementary page field	Date	Edited by	X
+VPP21&BAA/548	Title page / cover sheet		12.12.2019	willen	X
+VPP21&BAB/549	Table of contents : +VPP21&BAA/548 - =SPS_VPP1+VPP21&ETC/571		12.12.2019	willen	
+VPP21&BPA/550	Summarized parts list : WIK.PT100VGS - SIE.6ES7134-4GB11-0AB0+TM-E15C24-01		12.12.2019	willen	X
+VPP21&ETL1/551	Panel layout		12.12.2019	willen	
=VPP1+VPP21&EFS/552	power supply VPP1		12.12.2019	willen	
=VPP1+VPP21&EFS/553	On-site control unit Press 1		12.12.2019	willen	
=VPP1+VPP21&EFS/554	On-site control unit Press 1		12.12.2019	willen	
=VPP1+VPP21&EFS/555	temperature sensor conditioner 1		12.12.2019	willen	
=VPP1+VPP21&EFS/556	steam ragulating valve		12.12.2019	willen	
=VPP1+VPP21&EFS/557	valve roller adjustment press 1		12.12.2019	willen	
=VPP1+VPP21&EFS/558	Pneumatic steam stop valve		12.12.2019	willen	
=VPP1+VPP21&EFS/559	overflow flap		12.12.2019	willen	
=VPP1+VPP21&EFS/560	lubrication monitoring press 1		12.12.2019	willen	
=VPP1+VPP21&EFS/561	Omron distance display		12.12.2019	willen	
=SPS_VPP1+VPP21&EFA1/562	overview inputs		12.12.2019	willen	
=SPS_VPP1+VPP21&EFA1/563	overview analog inputs		12.12.2019	willen	
=SPS_VPP1+VPP21&EFA1/564	overview analog inputs		12.12.2019	willen	
=SPS_VPP1+VPP21&EFA1/565	overview outputs		12.12.2019	willen	
=SPS_VPP1+VPP21&EFA1/566	overview analog outputs		12.12.2019	willen	
=SPS_VPP1+VPP21&EFA1/567	operating panel		12.12.2019	willen	
=SPS_VPP1+VPP21&EFS/568	PLC power supply bus coupler		12.12.2019	willen	
=SPS_VPP1+VPP21&EFS/569	PLC power supply power module		12.12.2019	willen	
=SPS_VPP1+VPP21&EFS/570	PLC power supply touchpanel		12.12.2019	willen	
=SPS_VPP1+VPP21&ETC/571	PLC overview VPP1		12.12.2019	willen	

Summarized parts list

F02_002_en_US

Order number	Quantity	Designation	Type number	Supplier
PT100.VGS	1	PT100 Temperaturmeßfühler	PT100.VGS	WIK
	0			
O5P51A	1	Retro-reflective sensor	O5P-FPKG/US100/3D	IFM
216559	4	LED element, green, front mount, 12-30VAC/DC	M22-LED-G	ETN
	7	Einbauadapter	M22-A	EATON
216773	1	Indicator light, flush, green	M22-L-G	ETN
216392	7	Schildträger	M22S-ST-X	EATON
216378	5	Contact element, 1 N/C, front mount, 6. contact, screw connection	M22-K01	EATON
216876	1	Emergency-Stop actuator, non-illuminated	M22-PV	EATON
231273	1	Guard-ring, emergency switching off	M22-XGPV	EATON
216376	6	Contact element, 1N/O, front mount, 6. contact, screw connection	M22-K10	EATON
216700	3	Double actuator with indicator light, green I/white/red 0	M22-DDL-GR-X1/X0	EATON
216867	2	Selector switch, toggle, 2 positions, black, maintained	M22-WRK	EATON
216887	1	Key-operated actuator, 2 positions, 0 I, maintained	M22-WRS	EATON
K3HB-CPB 24VAC/VDC	4	Digital panel indicators, 1/8 DIN advanced indicators, K3HB-C, -P, -R	K3HB-CPB 24VAC/VDC	OMR
6ES7132-4BF00-0AA0 / 6ES7193-4CB30-0AA0	1	8DO, 24V DC, 0.5A / TM-E15C24-01	6ES7132-4BF00-0AA0 / 6ES7193-4CB30-0AA0	SIE
6ES7131-4BF00-0AA0 / 6ES7193-4CB30-0AA0	2	8DI, 24V DC / TM-E15C24-01	6ES7131-4BF00-0AA0 / 6ES7193-4CB30-0AA0	SIE
6ES7151-1AA06-0AB0	1	ET200S, IM151-1 STD, 12MBIT/S	6ES7151-1AA06-0AB0	SIE
6ES7138-4CA01-0AA0 / 6ES7193-4CD30-0AA0	2	PM-E, DC 24V / TM-P15C23-A0	6ES7138-4CA01-0AA0 / 6ES7193-4CD30-0AA0	SIE
6AV2124-0GC01-0AX0	2	SIMATIC HMI TP700 COMFORT	6AV2124-0GC01-0AX0	SIE
6ES7135-4GB01-0AB0 / 6ES7193-4CB30-0AA0	1	2AO I, +/-20MA, 4-20MA, 12BIT / TM-E15C24-01	6ES7135-4GB01-0AB0 / 6ES7193-4CB30-0AA0	SIE
6ES7134-4JB51-0AB0 / 6ES7193-4CB30-0AA0	1	2/4AI RTD ST, 15BIT / TM-E15C24-01	6ES7134-4JB51-0AB0 / 6ES7193-4CB30-0AA0	SIE
6ES7134-4GB11-0AB0 / 6ES7193-4CB30-0AA0	1	2AI STD I-4DMU, 4-20MA / TM-E15C24-01	6ES7134-4GB11-0AB0 / 6ES7193-4CB30-0AA0	SIE

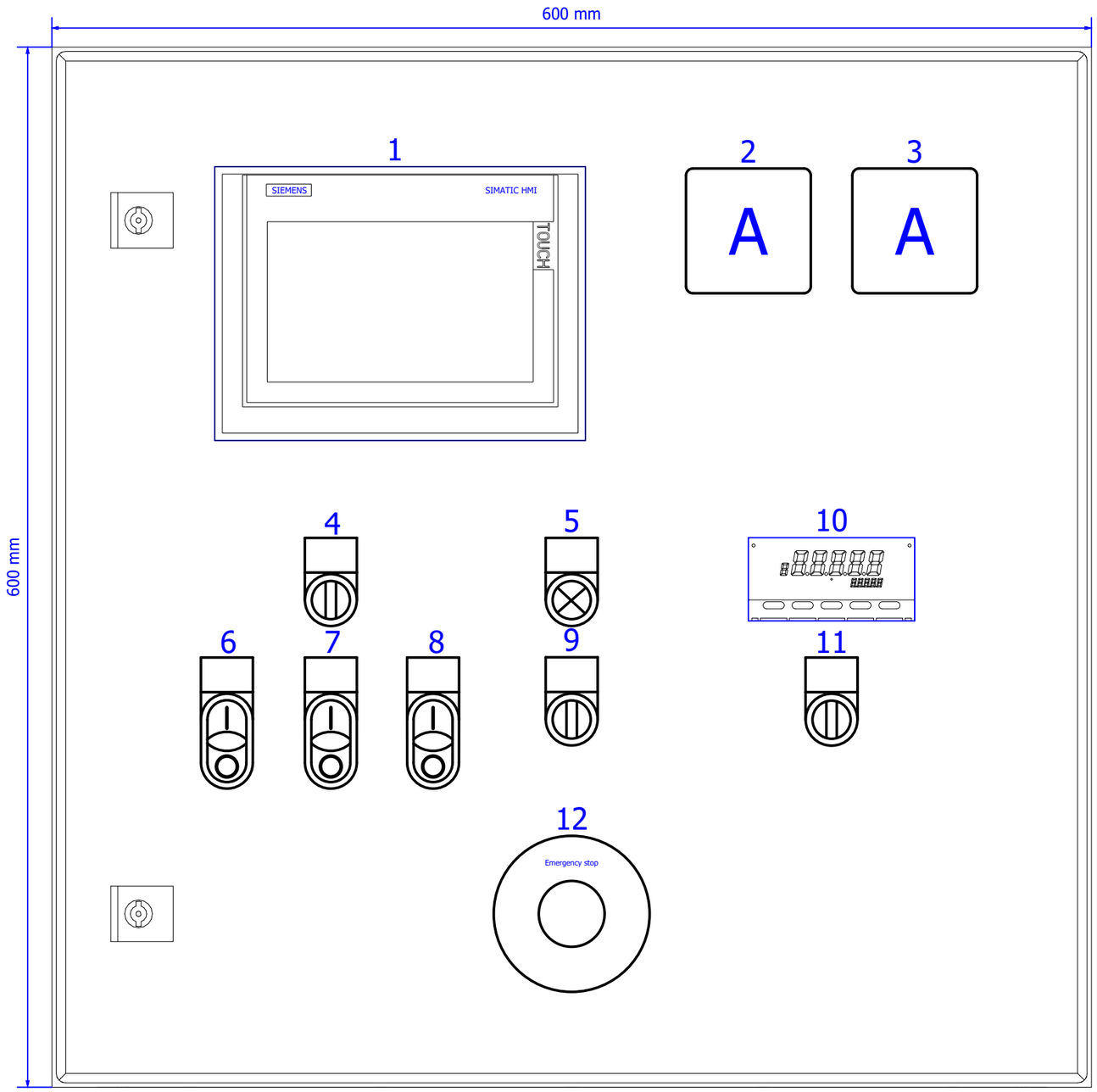

legend

1: Siemens HMI TP700

2: ampere meter press 1 M1

3: ampere meter press 1 M2

4: selector switch "automatic"

5: indicator lamp "feeding conveying OK"

6: double pushbutton "infeed screw 1 start/stop"

7: double pushbutton "Conditioner 1 start/stop"

8: double pushbutton "pellet press 1 start/stop"

9: selector switch "bypass"

10: Display Omron "Roller distance"

11: key switch "Reset Display"

12: emergency stop

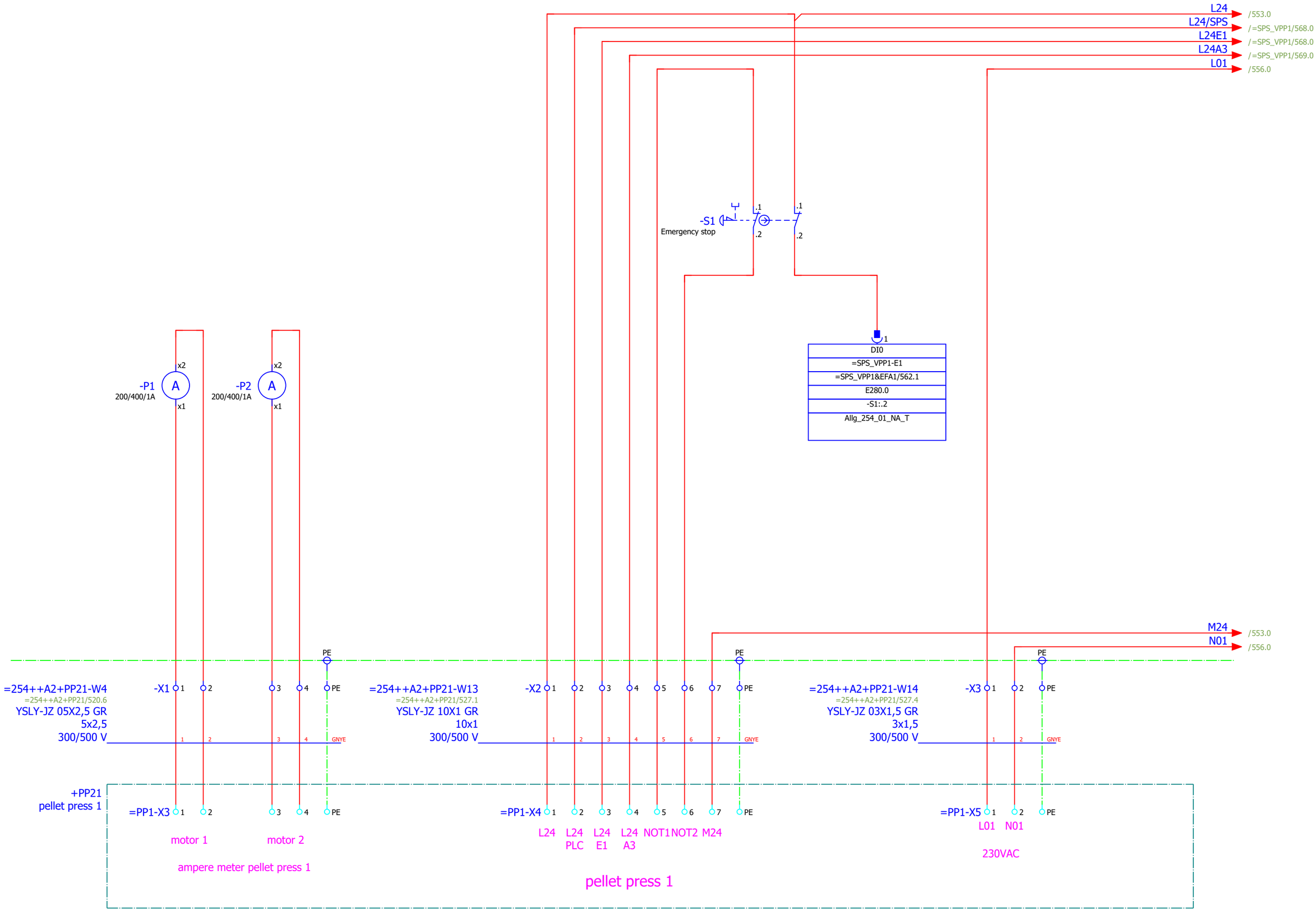

=HM++A3+HM2/504

553

			Date	12.12.2019	Mixed feed plant Golden Poultry	BEYTEC ... your gateway to success	power supply VPP1	= VPP1	
			Ed.	willen				+ VPP21	
			Appr		On-site control unit Press 1			1 : 1 / Part II	Page 552
Modification	Date	Name	Original	V:\EPLAN\Projekte\Company\Replace\Beytec\2018\Feed Mill Alssad.elk	Replaced by				Page 605

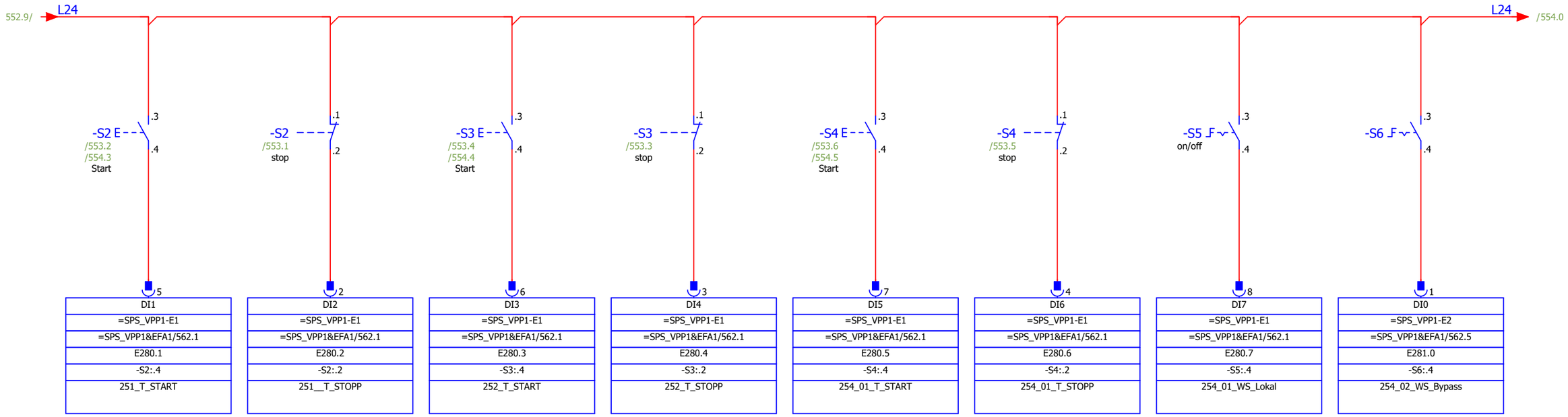

			Date	12.12.2019	Mixed feed plant Golden Poultry	BEYTEC ... your gateway to success	On-site control unit Press 1
			Ed.	willen			
			Appr		On-site control unit Press 1		
Modification	Date	Name	Original	V:\EPLAN\Projekte\Company\Replace\Beytec\2018\Feed Mill Alssad.elk	Replaced by		

= VPP1
+ VPP21

1 : 1 | Part II | Page 553 | Page 605

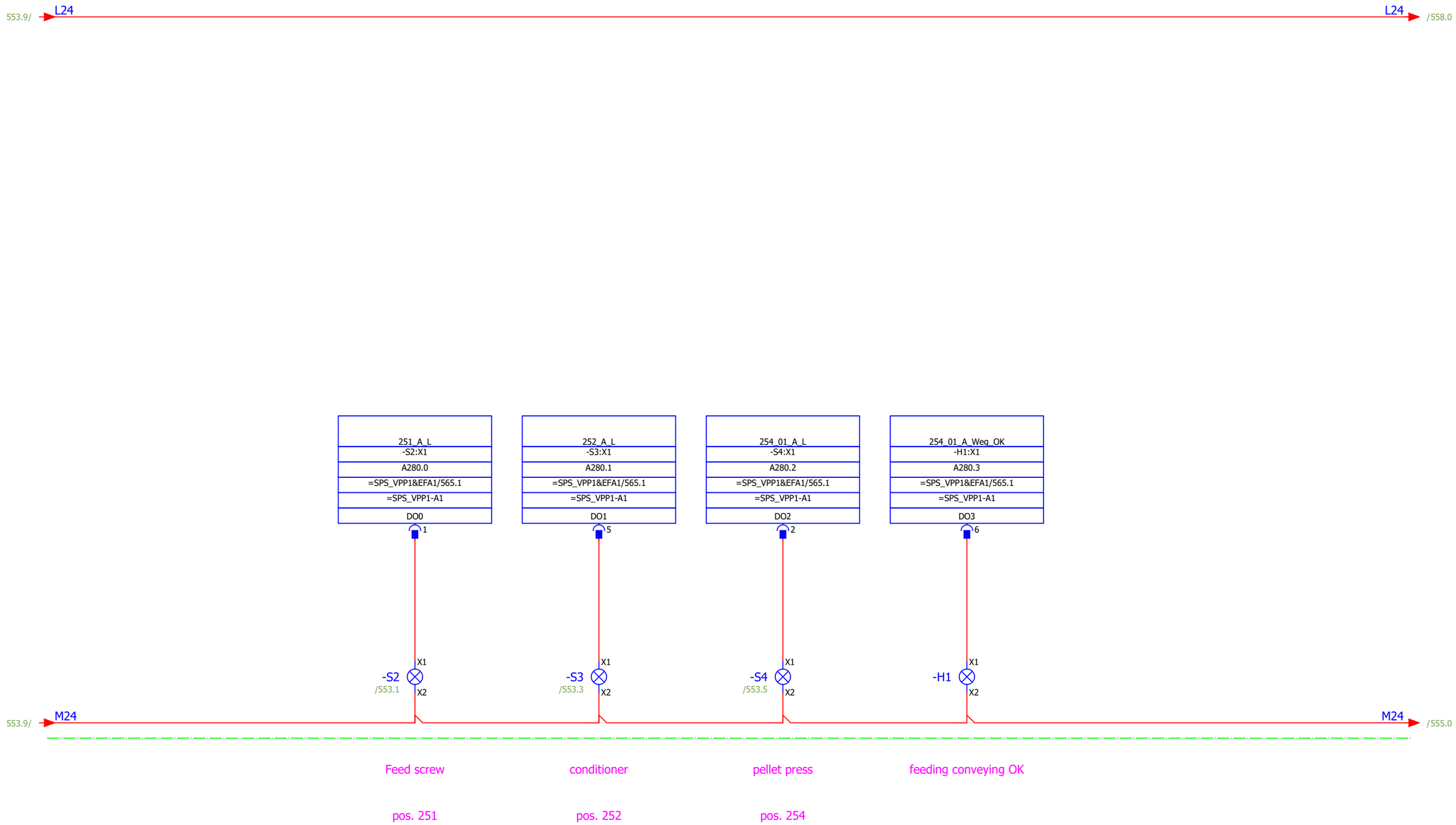

			Date	12.12.2019	Mixed feed plant Golden Poultry	BEYTEC ... your gateway to success	On-site control unit Press 1	= VPP1	
			Ed.	willen	On-site control unit Press 1			+ VPP21	
			Appr					1 : 1 / Part II	Page 554
Modification	Date	Name	Original	V:\EPLAN\Projekte\Company\Alsad\Beytec\2018\Feed Mill Alssad.elk	Replaced by				Page 605

Replaced by

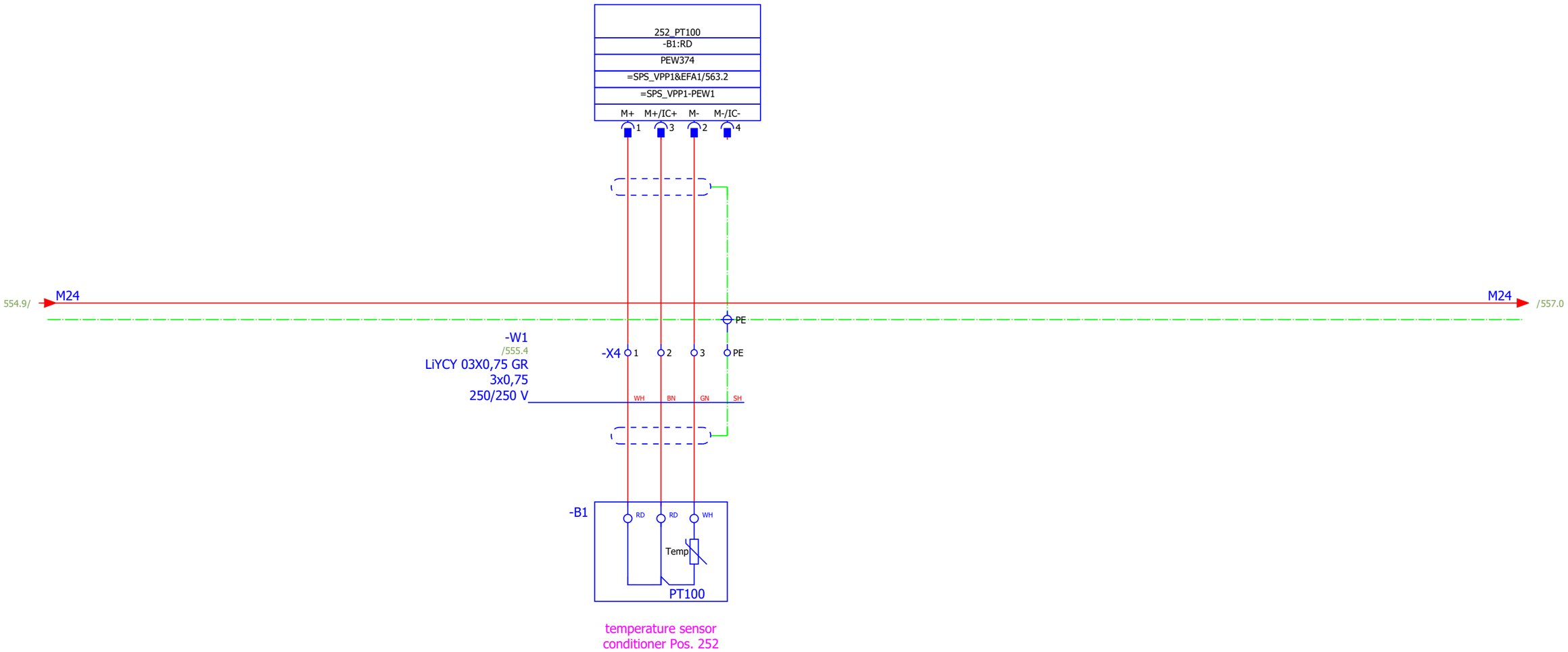

			Date	12.12.2019	Mixed feed plant Golden Poultry	BEYTEC ... your gateway to success	temperature sensor conditioner 1	= VPP1	
			Ed.	willen				+ VPP21	
			Appr		On-site control unit Press 1			1 : 1 / Part II	Page 555
Modification	Date	Name	Original	V:\EPLAN\Projekte\Company\Replace\Beytec\2018\Feed Mill Alssad.elk	Replaced by				Page 605

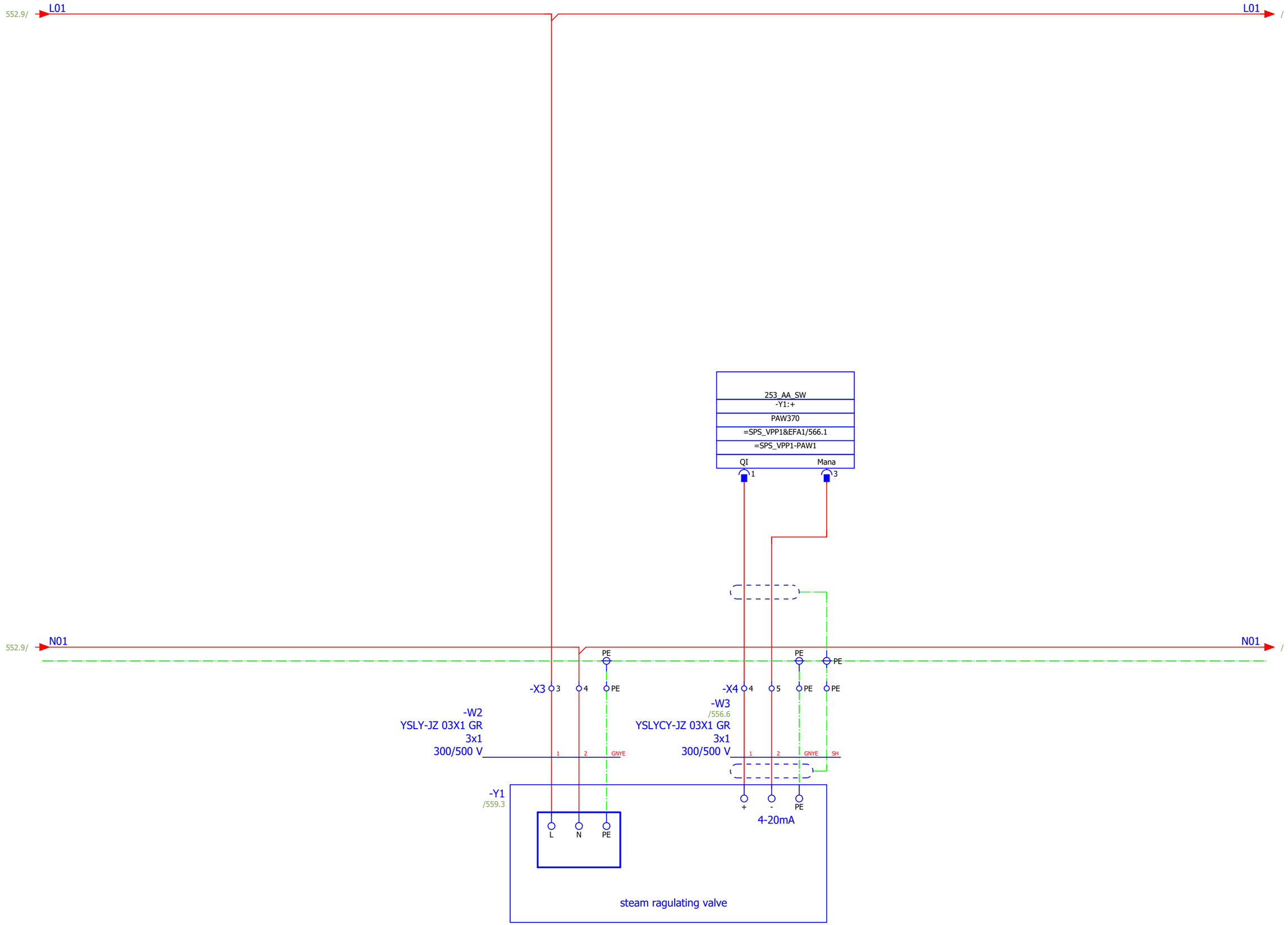

555

557

			Date	12.12.2019	Mixed feed plant Golden Poultry	BEYTEC	steam ragulating valve			= VPP1	
			Ed.	willen						+ VPP21	
			Appr		On-site control unit Press 1			1 : 1	Part II	Page 556	
Modification	Date	Name	Original	V:\EPLAN\Projekte\Company\Beytec\2018\Feed Mill Alssad.elk	Replaced by	... your gateway to success				Page 605	

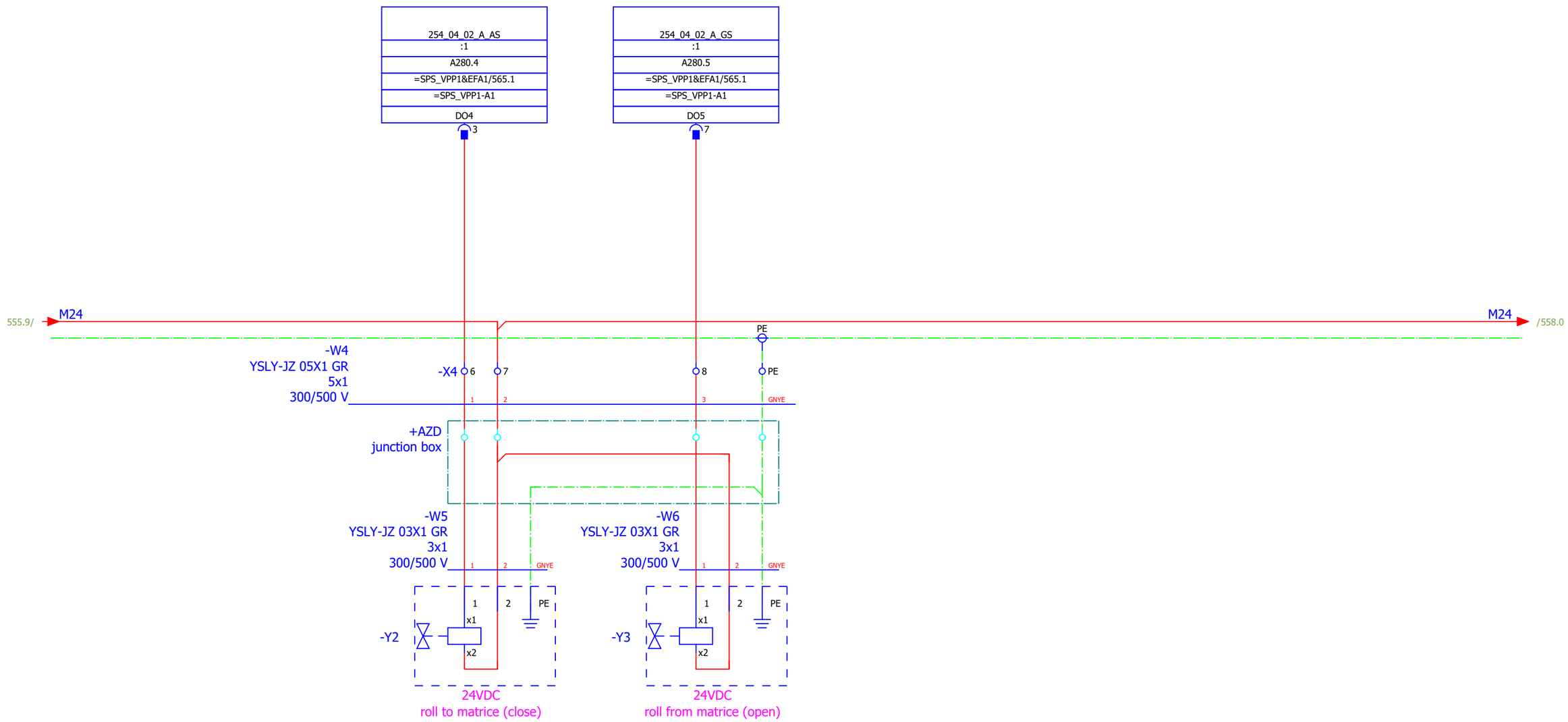

556

558

			Date	12.12.2019	Mixed feed plant Golden Poultry	BEYTEC ... your gateway to success	valve roller adjustment press 1	= VPP1	
			Ed.	willen				+ VPP21	
			Appr		On-site control unit Press 1		1 : 1	Part II	Page 557
Modification	Date	Name	Original	V:\EPLAN\Projekte\Company\Replace\Beytec\2018\Feed Mill Alssad.elk	Replaced by				Page 605

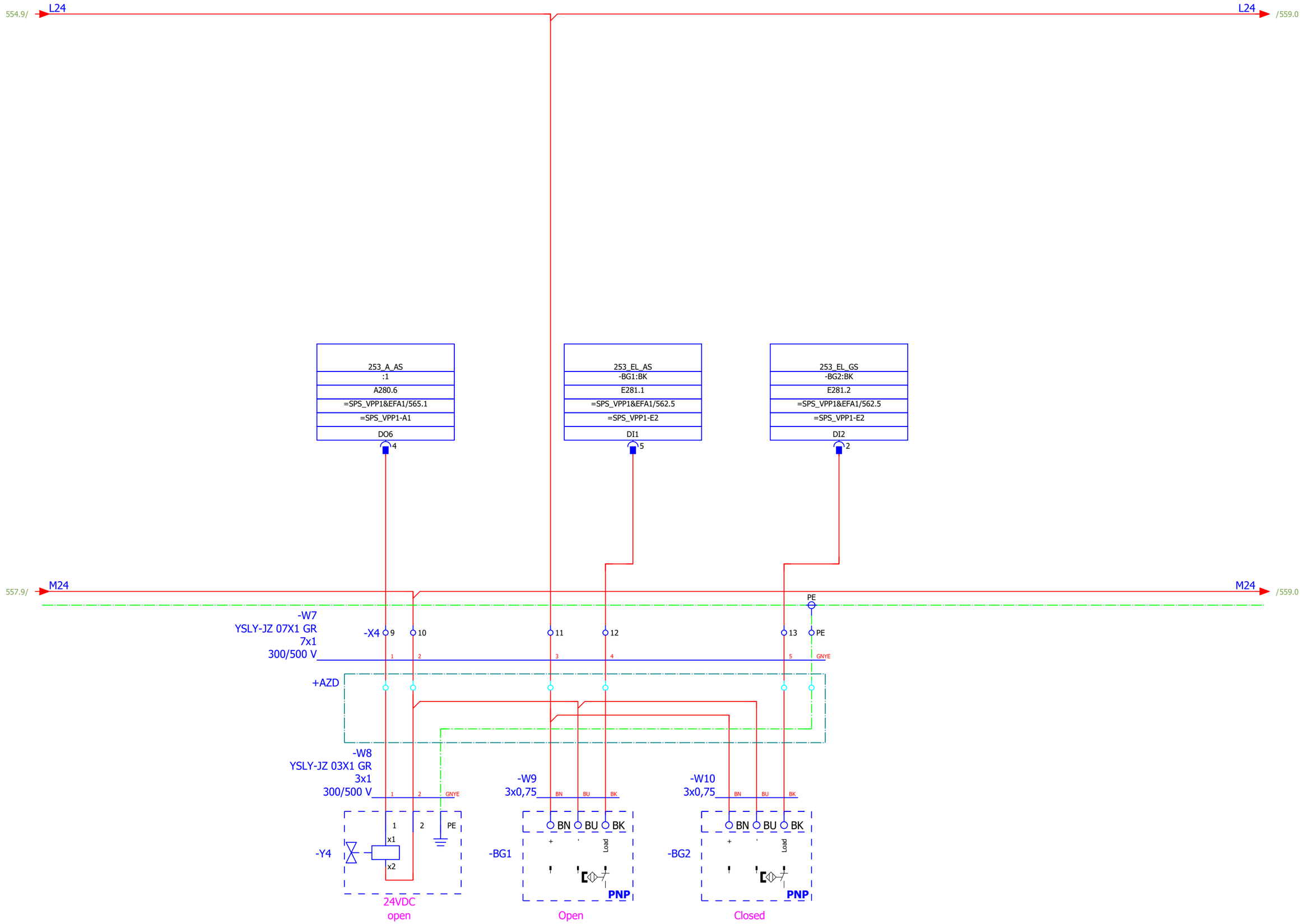

557

559

			Date	12.12.2019	Mixed feed plant Golden Poultry	BEYTEC ... your gateway to success	Pneumatic steam stop valve	= VPP1	
			Ed.	willen				+ VPP21	
			Appr		On-site control unit Press 1			1 : 1 / Part II	Page 558
Modification	Date	Name	Original	V:\EPLAN\Projekte\Company\Replace\Beytec\2018\Feed Mill Alssad.elk	Replaced by				Page 605

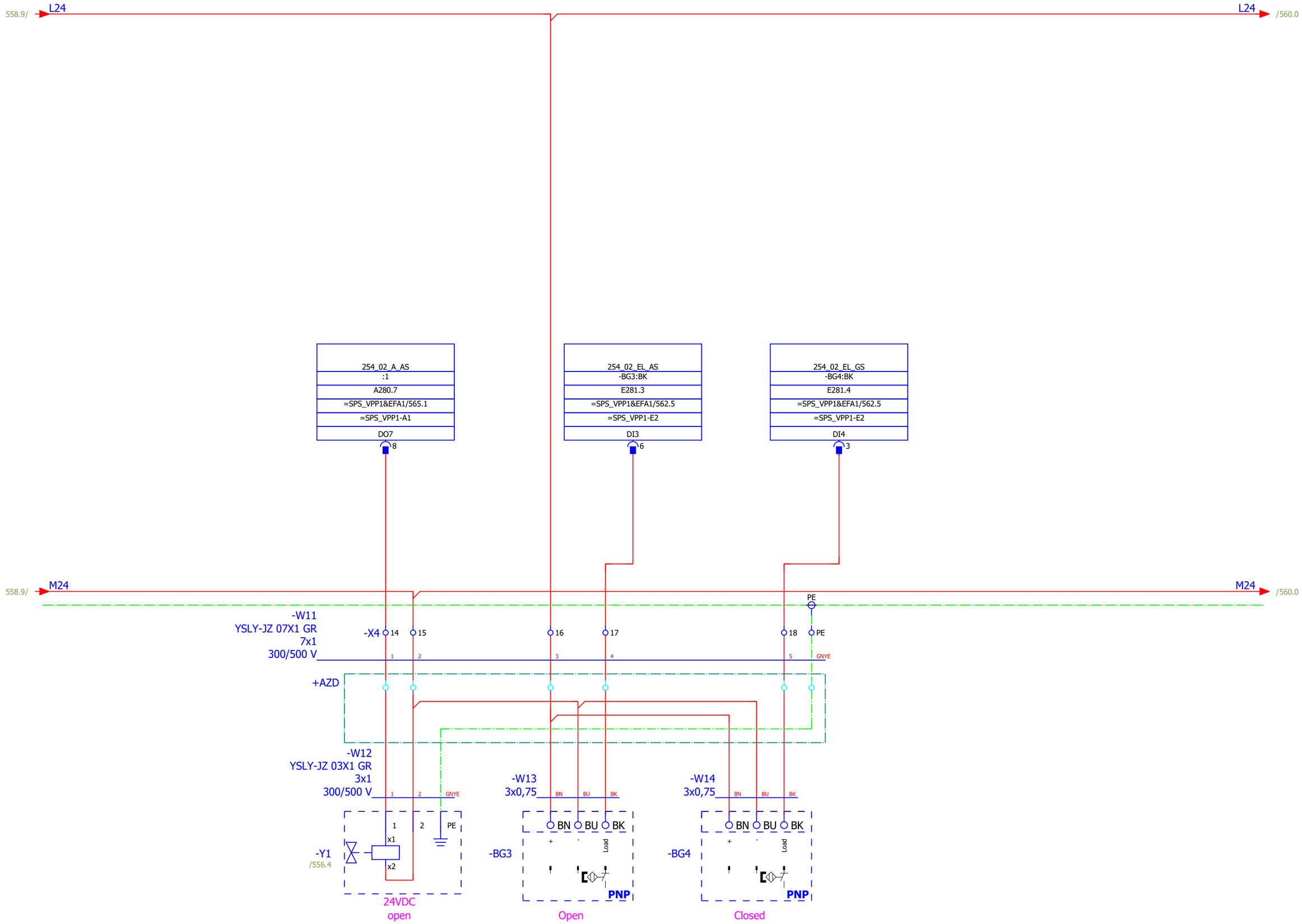

558

560

			Date	12.12.2019	Mixed feed plant Golden Poultry	BEYTEC ... your gateway to success	overflow flap		= VPP1
			Ed.	willen					+ VPP21
			Appr		On-site control unit Press 1			1 : 1	Part II
Modification	Date	Name	Original	V:\EPLAN\Projekte\Company\Replace\Beytec\2018\Feed Mill Alssad.elk	Replaced by				Page 559 / Page 605

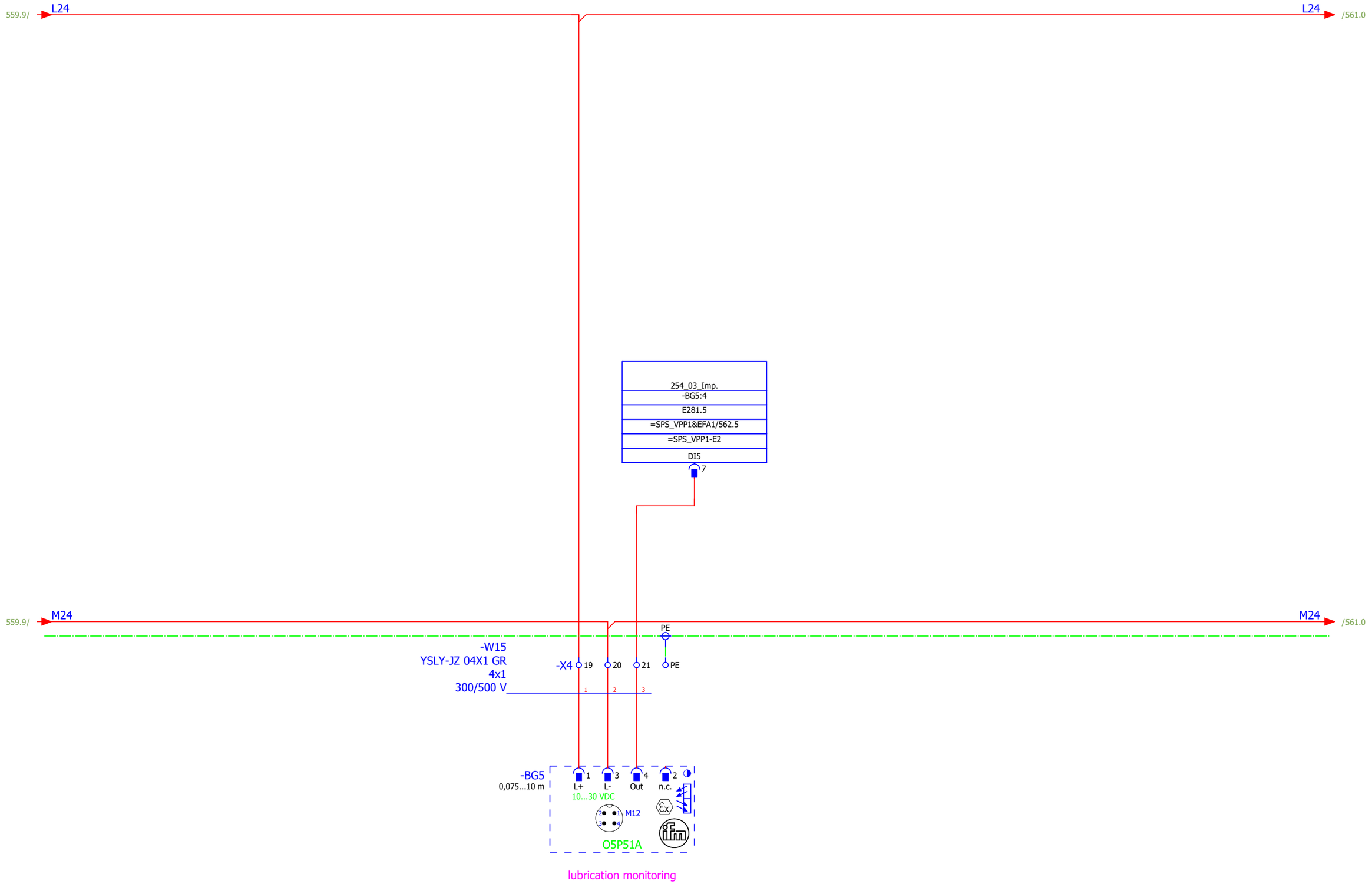

559

561

			Date	12.12.2019	Mixed feed plant Golden Poultry	BEYTEC ... your gateway to success	lubrication monitoring press 1	= VPP1	
			Ed.	willen				+ VPP21	
			Appr		On-site control unit Press 1		1 : 1	Part II	Page 560
Modification	Date	Name	Original	V:\EPLAN\Projekte\Company\Replace\Beytec\2018\Feed Mill Alssad.elk	Replaced by				Page 605

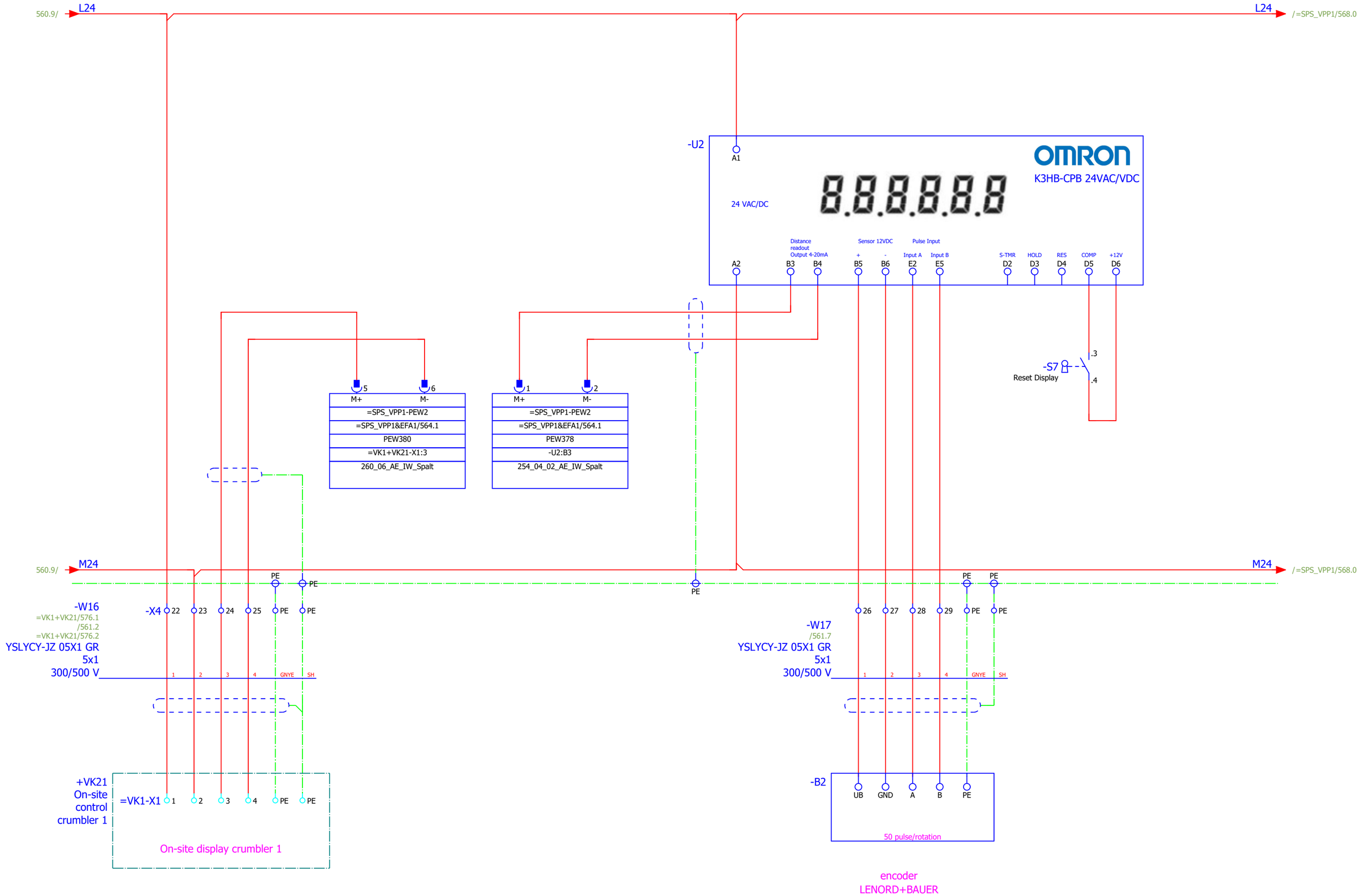

560

=VPP2+VPP22/581

			Date	12.12.2019	Mixed feed plant Golden Poultry	BEYTEC ... your gateway to success	Omron distance display		= VPP1
			Ed.	willen					+ VPP21
			Appr		On-site control unit Press 1			1 : 1 / Part II	Page 561
Modification	Date	Name	Original	V:\EPLAN\Projekte\Company\Beytec\2018\Feed Mill Alssad.elk	Replaced by				Page 605

-E1
&ETC/571.4

ET200S SIEMENS
8 DI DC 24 V

E280.0	1 DI0	=VPP1&EFS/552.V1 =VPP1-S1:.2	Allg_254_01_NA_T
E280.2	2 DI2	=VPP1&EFS/553.V2 =VPP1-S2:.2	251__T_STOPP
E280.4	3 DI4	=VPP1&EFS/553.V4 =VPP1-S3:.2	252_T_STOPP
E280.6	4 DI6	=VPP1&EFS/553.V6 =VPP1-S4:.2	254_01_T_STOPP
E280.1	5 DI1	=VPP1&EFS/553.V1 =VPP1-S2:.4	251_T_START
E280.3	6 DI3	=VPP1&EFS/553.V3 =VPP1-S3:.4	252_T_START
E280.5	7 DI5	=VPP1&EFS/553.V5 =VPP1-S4:.4	254_01_T_START
E280.7	8 DI7	=VPP1&EFS/553.V7 =VPP1-S5:.4	254_01_WS_Lokal

6ES7131-4BF00-0AA0
+ TM-E15C24-01

-E2
&ETC/571.4

ET200S SIEMENS
8 DI DC 24 V

E281.0	1 DI0	=VPP1&EFS/553.V0 =VPP1-S6:.4	254_02_WS_Bypass
E281.2	2 DI2	=VPP1&EFS/558.V2 =VPP1-BG2:BK	253_EL_GS
E281.4	3 DI4	=VPP1&EFS/559.V2 =VPP1-BG4:BK	254_02_EL_GS
E281.6	4 DI6		Spare
E281.1	5 DI1	=VPP1&EFS/558.V1 =VPP1-BG1:BK	253_EL_AS
E281.3	6 DI3	=VPP1&EFS/559.V1 =VPP1-BG3:BK	254_02_EL_AS
E281.5	7 DI5	=VPP1&EFS/560.V2 =VPP1-BG5:4	254_03_Imp.
E281.7	8 DI7		Spare

6ES7131-4BF00-0AA0
+ TM-E15C24-01

			Date	12.12.2019	Mixed feed plant Golden Poultry	BEYTEC ... your gateway to success	overview inputs	= SPS_VPP1
			Ed.	willen	On-site control unit Press 1			+ VPP21
			Appr				1 : 1	Part II
Modification	Date	Name	Original	V:\EPLAN\Projekte\Company\Beytec\2018\Feed Mill Alssad.elk	Replaced by			Page 562
								Page 605

-PEW1
&ETC/571.4

ET200S SIEMENS
2 AI RTD STANDARD

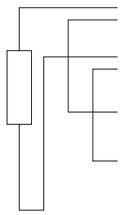

PEW374	1 M+	=VPP1&EFS/555.4	=VPP1-B1:RD	252_PT100
PEW374	2 M-	=VPP1&EFS/555.4		2074_01_PT100
PEW374	3 M+/IC+	=VPP1&EFS/555.4		2074_01_PT100
PEW374	4 M-/IC-	=VPP1&EFS/555.4		2074_01_PT100

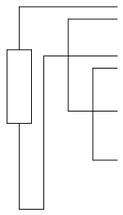

PEW376	5 M+	Spare
PEW376	6 M-	
PEW376	7 M+/IC+	
PEW376	8 M-/IC-	

6ES7134-4JB51-0AB0
+ TM-E15C24-01

			Date	12.12.2019	Mixed feed plant Golden Poultry	BEYTEC ... your gateway to success	overview analog inputs
			Ed.	willen	On-site control unit Press 1		
			Appr				
Modification	Date	Name	Original	V:\EPLAN\Projekte\Company\Beytec\2018\Feed Mill Alssad.elk	Replaced by		

= SPS_VPP1
+ VPP21
1 : 1 Part II Page 563 Page 605

-PEW2
&ETC/571.5

ET200S SIEMENS
2 AI I 4-wire STANDARD

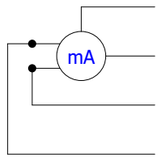

PEW378	1	M+	=VPP1&EFS/56±.V	VPP1-U2:B3	254_04_02_AE_IW_Spalt
PEW378	2	M-	=VPP1&EFS/561.4		2076_01_07_AE_IW_Spalt
	3	DC24V			
	4	Mana			

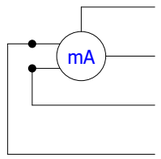

PEW380	5	M+	=VPP1&EFS/56±.V	VK1+VK21-X1:3	260_06_AE_IW_Spalt
PEW380	6	M-	=VPP1&EFS/561.3		2082_01_06_AE_IW_Spalt
	7	DC24V			
	8	Mana			

6ES7134-4GB11-0AB0
+ TM-E15C24-01

			Date	12.12.2019	Mixed feed plant Golden Poultry	BEYTEC ... your gateway to success	overview analog inputs	= SPS_VPP1	
			Ed.	willen				+ VPP21	
			Appr		On-site control unit Press 1			1 : 1 / Part II	Page 564
Modification	Date	Name	Original	V:\EPLAN\Projekte\Company\Beytec\2018\Feed Mill Alssad.elk	Replaced by				Page 605

Replaced by

-A1
&ETC/571.6

ET200S SIEMENS
8 DO DC24V 0,5A

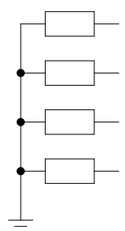

A280.0 1/QX.0/DO0	1 DO0	=VPP1&EFS/554.X1 VPP1-S2:X1	251_A_L
A280.2 2/QX.2/DO2	2 DO2	=VPP1&EFS/554.X1 VPP1-S4:X1	254_01_A_L
A280.4 3/QX.4/DO4	3 DO4	=VPP1&EFS/557.13	254_04_02_A_AS
A280.6 4/QX.6/DO6	4 DO6	=VPP1&EFS/558.13	253_A_AS

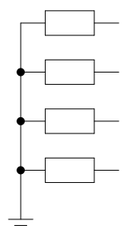

A280.1 5/QX.1/DO1	5 DO1	=VPP1&EFS/554.X1 VPP1-S3:X1	252_A_L
A280.3 6/QX.3/DO3	6 DO3	=VPP1&EFS/554.X1 VPP1-H1:X1	254_01_A_Weg_OK
A280.5 7/QX.5/DO5	7 DO5	=VPP1&EFS/557.14	254_04_02_A_GS
A280.7 8/QX.7/DO7	8 DO7	=VPP1&EFS/559.13	254_02_A_AS

6ES7132-4BF00-0AA0
+ TM-E15C24-01

-PAW1
&ETC/571.6

ET200S SIEMENS
2 AO I STANDARD

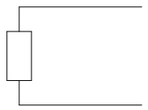

PAW370	1 QI	=VPP1&EFS/556.VPP1-Y1:+	253_AA_SW
2	2		
	3 Mana	=VPP1&EFS/556.6	
4	4		

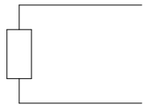

PAW372	5 QI		Spare
6	6		
	7 Mana		
8	8		

6ES7135-4GB01-0AB0
+ TM-E15C24-01

			Date	12.12.2019	Mixed feed plant Golden Poultry	BEYTEC ... your gateway to success	overview analog outputs	= SPS_VPP1
			Ed.	willen				+ VPP21
			Appr		On-site control unit Press 1		1 : 1	Part II
Modification	Date	Name	Original	V:\EPLAN\Projekte\Company\Replace\Beytec\2018\Feed Mill Alssad.elk	Replaced by			Page 566 / Page 605

-K4
&EFS/570.2
Rack X
Slot Y
SIE.6AV2124-0GC01-0AX0

COMFORT PANEL SIEMENS
TP700 Touch 7"

-X80:1	L+	&EFS/570.3
-X80:2	M	&EFS/570.4
P1:	PN	&EFS/570.5
P2:	PN	
-X2:	DP	
-X60:	USB	
-X61:	USB	
-X62:	USB	
-X90:1	Audio In	
-X90:2	Audio Out	
...	PE	

6AV2124-0GC01-0AX0

			Date	12.12.2019	Mixed feed plant Golden Poultry	BEYTEC ... your gateway to success	operating panel		= SPS_VPP1
			Ed.	willen					+ VPP21
			Appr		On-site control unit Press 1			1 : 1	Part II
Modification	Date	Name	Original	V:\EPLAN\Projekte\Company\Alsad\Beytec\2018\Feed Mill Alssad.elk	Replaced by				Page 567
									Page 605

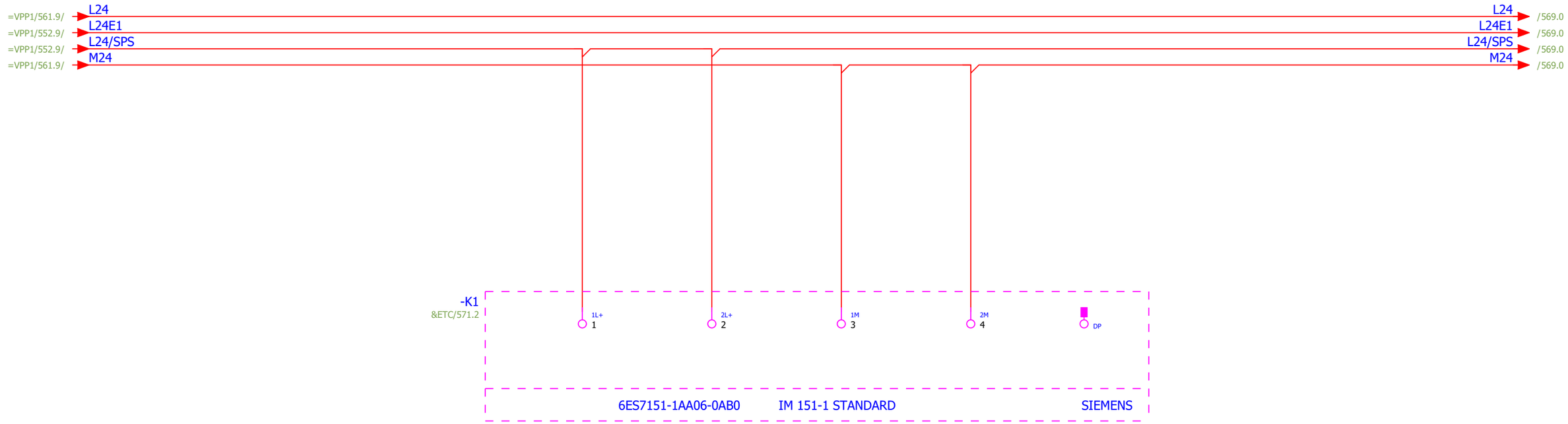
=VPP1/561.9/
L24
=VPP1/552.9/
L24E1
=VPP1/552.9/
L24/SPS
=VPP1/561.9/
M24
L24
/569.0
L24E1
/569.0
L24/SPS
/569.0
M24
/569.0
-K1
&ETC/571.2
1L+
1
2L+
2
1M
3
2M
4
DP
6ES7151-1AA06-0AB0
IM 151-1 STANDARD
SIEMENS

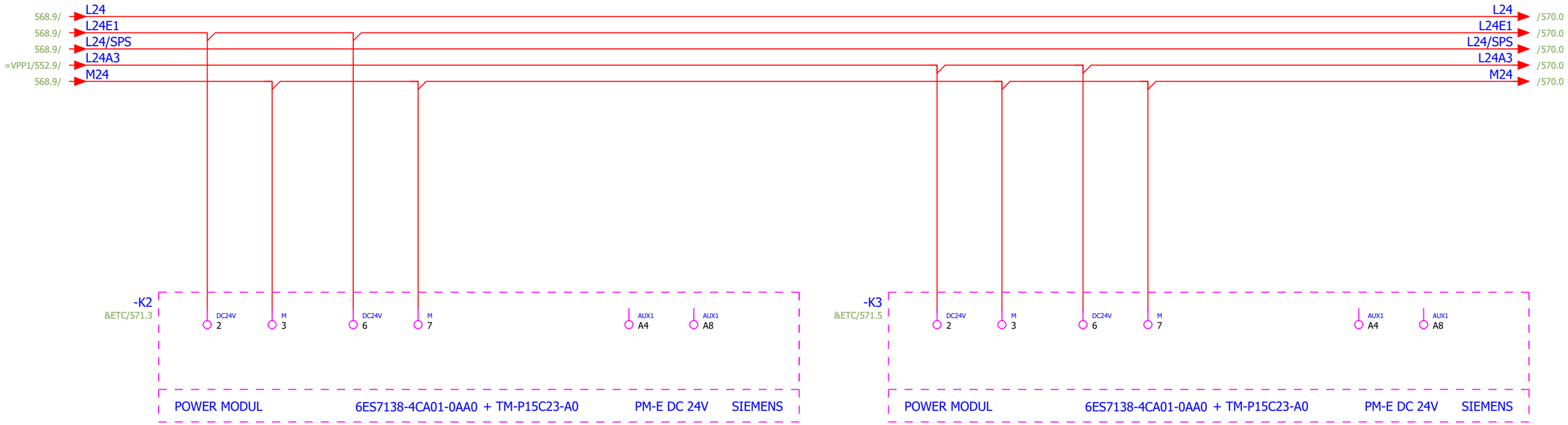
568.9/
L24
568.9/
L24E1
568.9/
L24/SPS
=VPP1/552.9/
L24A3
568.9/
M24
L24
/570.0
L24E1
/570.0
L24/SPS
/570.0
L24A3
/570.0
M24
/570.0
-K2
&ETC/571.3
DC24V
2
M
3
DC24V
6
M
7
AUX1
A4
AUX1
A8
POWER MODUL
6ES7138-4CA01-0AA0 + TM-P15C23-A0
PM-E DC 24V
SIEMENS
-K3
&ETC/571.5
DC24V
2
M
3
DC24V
6
M
7
AUX1
A4
AUX1
A8
POWER MODUL
6ES7138-4CA01-0AA0 + TM-P15C23-A0
PM-E DC 24V
SIEMENS

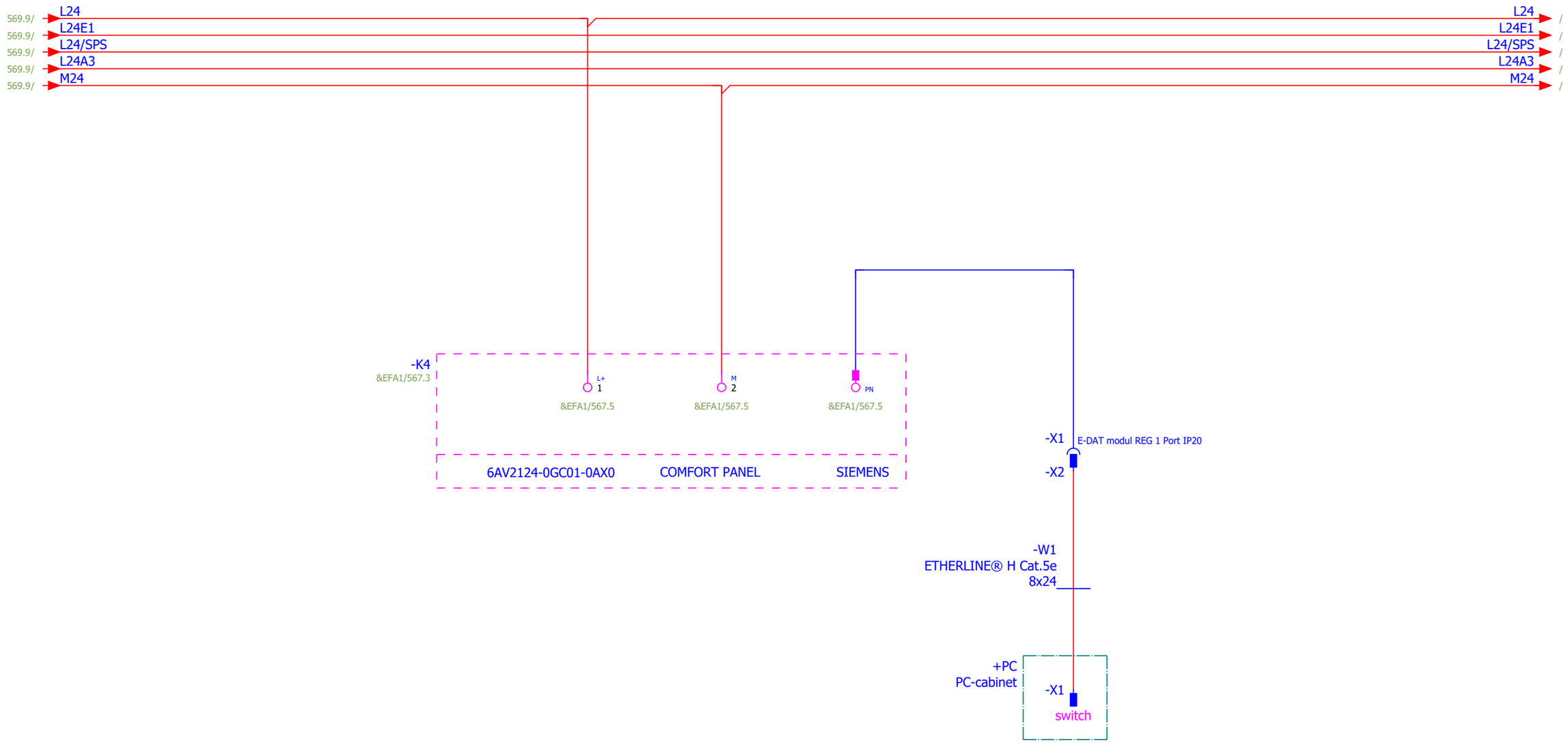

			Date	12.12.2019	Mixed feed plant Golden Poultry	BEYTEC ... your gateway to success	PLC power supply touchpanel	= SPS_VPP1	
			Ed.	willen				+ VPP21	
			Appr		On-site control unit Press 1			1 : 1 Part II	Page 570
Modification	Date	Name	Original	V:\EPLAN\Projekte\Company\Replace\Beytec\2018\Feed Mill Alssad.elk	Replaced by				Page 605

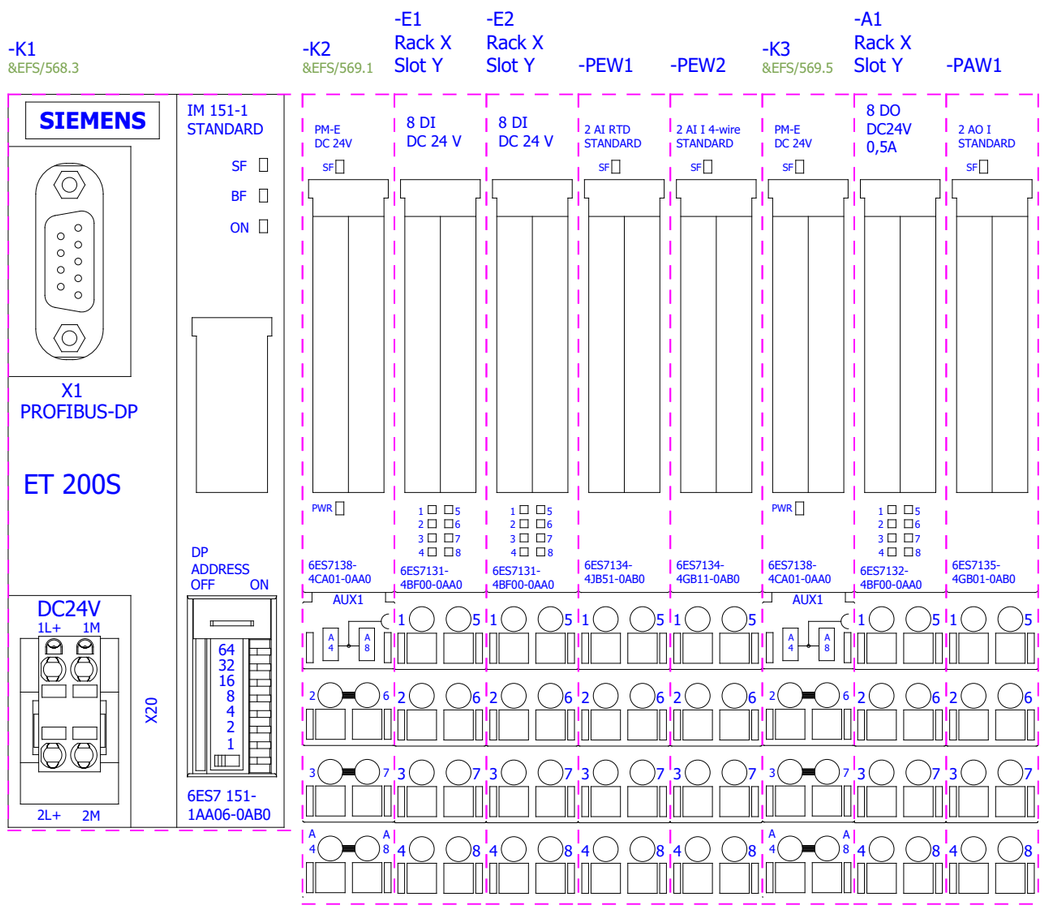
-K1
&EFS/568.3
-K2
&EFS/569.1
-E1
Rack X
Slot Y
-E2
Rack X
Slot Y
-PEW1
-PEW2
-K3
&EFS/569.5
-A1
Rack X
Slot Y
-PAW1
SIEMENS
X1
PROFIBUS-DP
ET 200S
DC24V
1L+ 1M
2L+ 2M
X20
IM 151-1
STANDARD
SF
BF
ON
DP
ADDRESS
OFF ON
64
32
16
8
4
2
1
6ES7 151-
1AA06-0AB0
PM-E
DC 24V
8 DI
DC 24 V
8 DI
DC 24 V
2 AI RTD
STANDARD
2 AI I 4-wire
STANDARD
PM-E
DC 24V
8 DO
DC24V
0,5A
2 AO I
STANDARD
PWR
6ES7138-
4CA01-0AA0
6ES7131-
4BF00-0AA0
6ES7131-
4BF00-0AA0
6ES7134-
4JB51-0AB0
6ES7134-
4GB11-0AB0
6ES7138-
4CA01-0AA0
6ES7132-
4BF00-0AA0
6ES7135-
4GB01-0AB0
AUX1

BEYTEC

... your gateway to success

Company / customer	BeyTec
Project description	Golden Poultry
Job number	Part II
Mounting location	On-site control crumbler 1

Technical data:

Operating voltage	400 V
Operating frequency	50 Hz
Operating current	
Power network	
Control voltage	24VDC
Protection class electrical	SK I
Degree of protection	IP54
Responsible for project	Willen

Created on	21.10.2019		
Edit date	12.12.2019	by (short name) willen	Number of pages 605

Table of contents

Column X: An automatically generated page was edited

F06_001_EN

Page	Page description	supplementary page field	Date	Edited by	X
+VK21&BAA/572	Title page / cover sheet		12.12.2019	willen	X
+VK21&BAB/573	Table of contents : +VK21&BAA/572 - =VK1+VK21&EFS/576		12.12.2019	willen	
+VK21&BPA/574	Summarized parts list : OMR.K3HB-CPB-24VAC/VDC - ETN.M22-D-S		12.12.2019	willen	X
+VK21&ETL1/575	Panel layout		12.12.2019	willen	
=VK1+VK21&EFS/576	Omron distance display		12.12.2019	willen	

Summarized parts list

F02_002_en_US

Order number	Quantity	Designation	Type number	Supplier
K3HB-CPB 24VAC/VDC	2	Digital panel indicators, 1/8 DIN advanced indicators, K3HB-C, -P, -R	K3HB-CPB 24VAC/VDC	OMR
RV3100	1	Solid shaft encoder	INCREMENTAL ENCODER BASIC LINE	IFM
216376	3	Contact element, 1N/O, front mount, 6. contact, screw connection	M22-K10	EATON
216392	3	Schildträger	M22S-ST-X	EATON
216887	1	Key-operated actuator, 2 positions, 0 I, maintained	M22-WRS	EATON
	3	Einbauadapter	M22-A	EATON
216590	2	Pushbutton, flush, black, momentary	M22-D-S	EATON

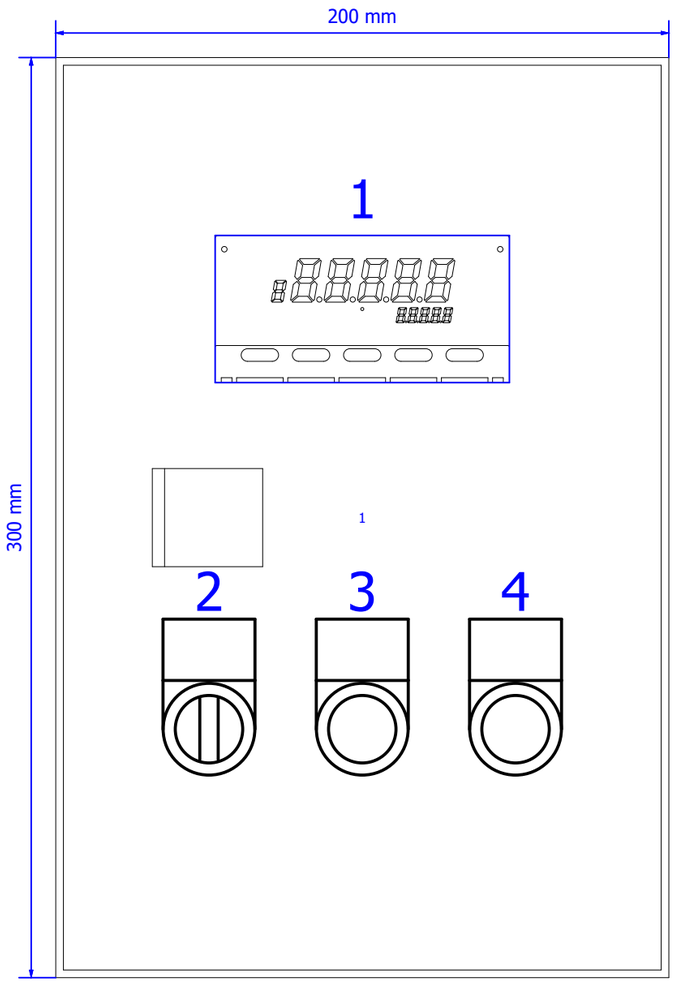

Key

1: Display Omron "Roller distance"

2: key switch "Reset Display"

3: pushbutton "Roller distance open"

4: pushbutton "Roller distance close"

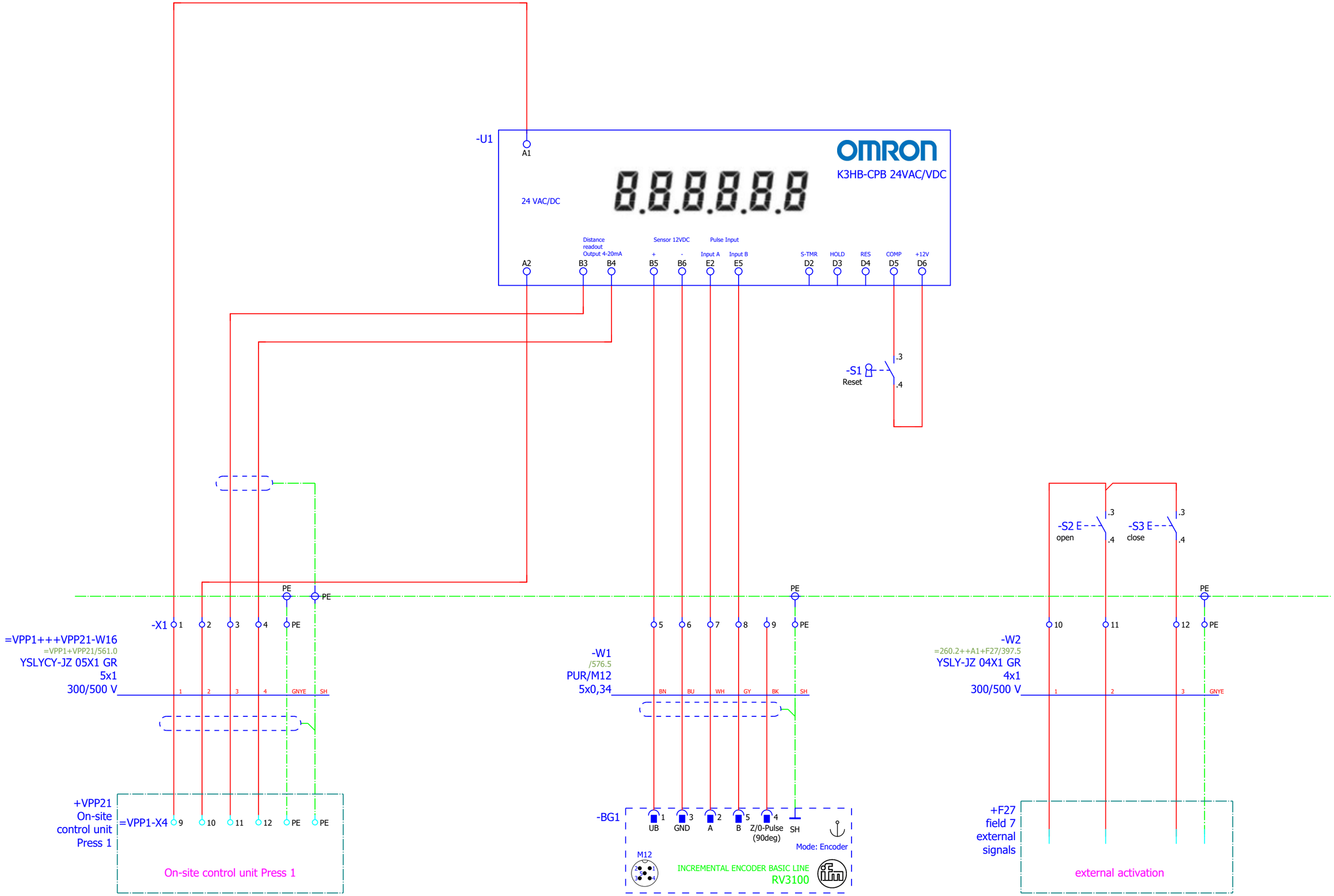

=VPP2+VPP22/590

=VK2+VK22/605

			Date	12.12.2019	Mixed feed plant Golden Poultry	BEYTEC ... your gateway to success	Omron distance display	= VK1
			Ed.	willen				+ VK21
			Appr		On-site control crumbler 1		1 : 1	Part II
Modification	Date	Name	Original	V:\EPLAN\Projekte\Company\Beytec\2018\Feed Mill Alssad.elk	Replaced by			Page 576 / Page 605

BEYTEC

... your gateway to success

Company / customer	BeyTec
Project description	Golden Poultry
Job number	Part II
Mounting location	On-site control unit Press 2

Technical data:

Operating voltage	400 V
Operating frequency	50 Hz
Operating current	
Power network	
Control voltage	24VDC
Protection class electrical	SK I
Degree of protection	IP54
Responsible for project	Willen

Created on	21.10.2019		
Edit date	12.12.2019	by (short name) willen	Number of pages 605

Table of contents

Column X: An automatically generated page was edited

F06_001_EN

Page	Page description	supplementary page field	Date	Edited by	X
+VPP22&BAA/577	Title page / cover sheet		12.12.2019	willen	X
+VPP22&BAB/578	Table of contents : +VPP22&BAA/577 - =SPS_VPP2+VPP22&ETC/600		12.12.2019	willen	
+VPP22&BPA/579	Summarized parts list : OMR.K3HB-CPB-24VAC/VDC - SIE.6ES7134-4GB11-0AB0+TM-E15C24-01		12.12.2019	willen	X
+VPP22&ETL1/580	Panel layout		12.12.2019	willen	
=VPP2+VPP22&EFS/581	power supply VPP2		12.12.2019	willen	
=VPP2+VPP22&EFS/582	On-site control unit Press 2		12.12.2019	willen	
=VPP2+VPP22&EFS/583	On-site control unit Press 2		12.12.2019	willen	
=VPP2+VPP22&EFS/584	temperature sensor conditioner		12.12.2019	willen	
=VPP2+VPP22&EFS/585	steam ragulating valve		12.12.2019	willen	
=VPP2+VPP22&EFS/586	valve roller adjustment press 2		12.12.2019	willen	
=VPP2+VPP22&EFS/587	Pneumatic steam stop valve		12.12.2019	willen	
=VPP2+VPP22&EFS/588	overflow flap		12.12.2019	willen	
=VPP2+VPP22&EFS/589	lubrication monitoring press 1		12.12.2019	willen	
=VPP2+VPP22&EFS/590	Omron distance display		12.12.2019	willen	
=SPS_VPP2+VPP22&EFA1/591	overview inputs		12.12.2019	willen	
=SPS_VPP2+VPP22&EFA1/592	overview analog inputs		12.12.2019	willen	
=SPS_VPP2+VPP22&EFA1/593	overview analog inputs		12.12.2019	willen	
=SPS_VPP2+VPP22&EFA1/594	overview outputs		12.12.2019	willen	
=SPS_VPP2+VPP22&EFA1/595	overview analog outputs		12.12.2019	willen	
=SPS_VPP2+VPP22&EFA1/596	operating panel		12.12.2019	willen	
=SPS_VPP2+VPP22&EFS/597	PLC power supply bus coupler		12.12.2019	willen	
=SPS_VPP2+VPP22&EFS/598	PLC power supply power module		12.12.2019	willen	
=SPS_VPP2+VPP22&EFS/599	PLC power supply touchpanel		12.12.2019	willen	
=SPS_VPP2+VPP22&ETC/600	PLC overview VPP2		12.12.2019	willen	

Summarized parts list

F02_002_en_US

Order number	Quantity	Designation	Type number	Supplier
K3HB-CPB 24VAC/VDC	2	Digital panel indicators, 1/8 DIN advanced indicators, K3HB-C, -P, -R	K3HB-CPB 24VAC/VDC	OMR
PT100.VGS	1	PT100 Temperaturmeßfühler	PT100.VGS	WIK
	0			
O5P51A	1	Retro-reflective sensor	O5P-FPKG/US100/3D	IFM
216559	4	LED element, green, front mount, 12-30VAC/DC	M22-LED-G	ETN
	7	Einbauadapter	M22-A	EATON
216773	1	Indicator light, flush, green	M22-L-G	ETN
216392	7	Schildträger	M22S-ST-X	EATON
216378	5	Contact element, 1 N/C, front mount, 6. contact, screw connection	M22-K01	EATON
216876	1	Emergency-Stop actuator, non-illuminated	M22-PV	EATON
231273	1	Guard-ring, emergency switching off	M22-XGPV	EATON
216376	6	Contact element, 1N/O, front mount, 6. contact, screw connection	M22-K10	EATON
216700	3	Double actuator with indicator light, green I/white/red 0	M22-DDL-GR-X1/X0	EATON
216867	2	Selector switch, toggle, 2 positions, black, maintained	M22-WRK	EATON
216887	1	Key-operated actuator, 2 positions, 0 I, maintained	M22-WRS	EATON
6ES7132-4BF00-0AA0 / 6ES7193-4CB30-0AA0	1	8DO, 24V DC, 0.5A / TM-E15C24-01	6ES7132-4BF00-0AA0 / 6ES7193-4CB30-0AA0	SIE
6ES7131-4BF00-0AA0 / 6ES7193-4CB30-0AA0	2	8DI, 24V DC / TM-E15C24-01	6ES7131-4BF00-0AA0 / 6ES7193-4CB30-0AA0	SIE
6ES7151-1AA06-0AB0	1	ET200S, IM151-1 STD, 12MBIT/S	6ES7151-1AA06-0AB0	SIE
6AV2124-0GC01-0AX0	2	SIMATIC HMI TP700 COMFORT	6AV2124-0GC01-0AX0	SIE
6ES7138-4CA01-0AA0 / 6ES7193-4CD30-0AA0	2	PM-E, DC 24V / TM-P15C23-A0	6ES7138-4CA01-0AA0 / 6ES7193-4CD30-0AA0	SIE
6ES7135-4GB01-0AB0 / 6ES7193-4CB30-0AA0	1	2AO I, +/-20MA, 4-20MA, 12BIT / TM-E15C24-01	6ES7135-4GB01-0AB0 / 6ES7193-4CB30-0AA0	SIE
6ES7134-4JB51-0AB0 / 6ES7193-4CB30-0AA0	1	2/4AI RTD ST, 15BIT / TM-E15C24-01	6ES7134-4JB51-0AB0 / 6ES7193-4CB30-0AA0	SIE
6ES7134-4GB11-0AB0 / 6ES7193-4CB30-0AA0	1	2AI STD I-4DMU, 4-20MA / TM-E15C24-01	6ES7134-4GB11-0AB0 / 6ES7193-4CB30-0AA0	SIE

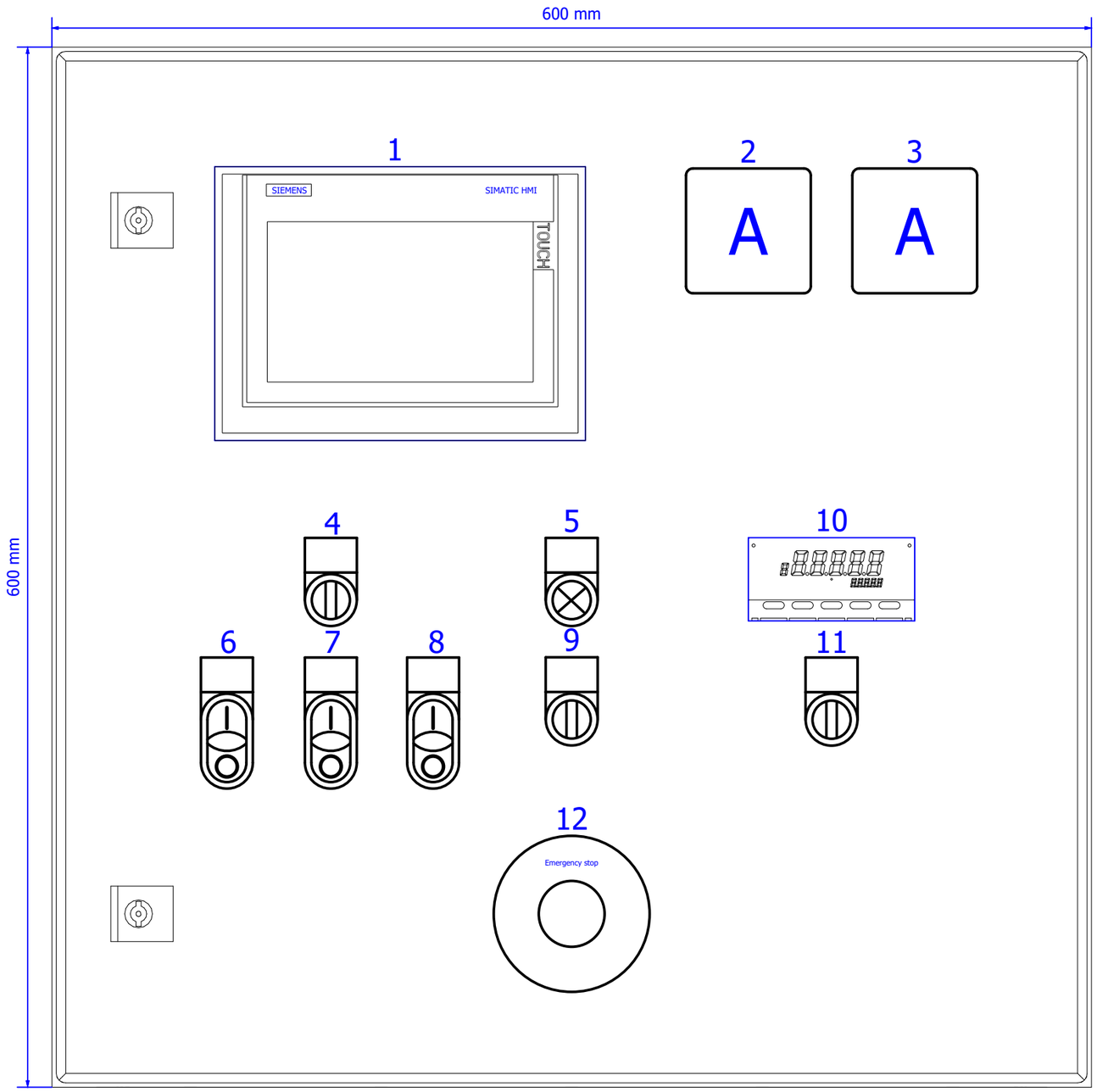

legend

1: Siemens HMI TP700

2: ampere meter press 1 M1

3: ampere meter press 1 M2

4: selector switch "automatic"

5: indicator lamp "feeding conveying OK"

6: double pushbutton "infeed screw 1 start/stop"

7: double pushbutton "Conditioner 1 start/stop"

8: double pushbutton "pellet press 1 start/stop"

9: selector switch "bypass"

10: Display Omron "Roller distance"

11: key switch "Reset Display"

12: emergency stop

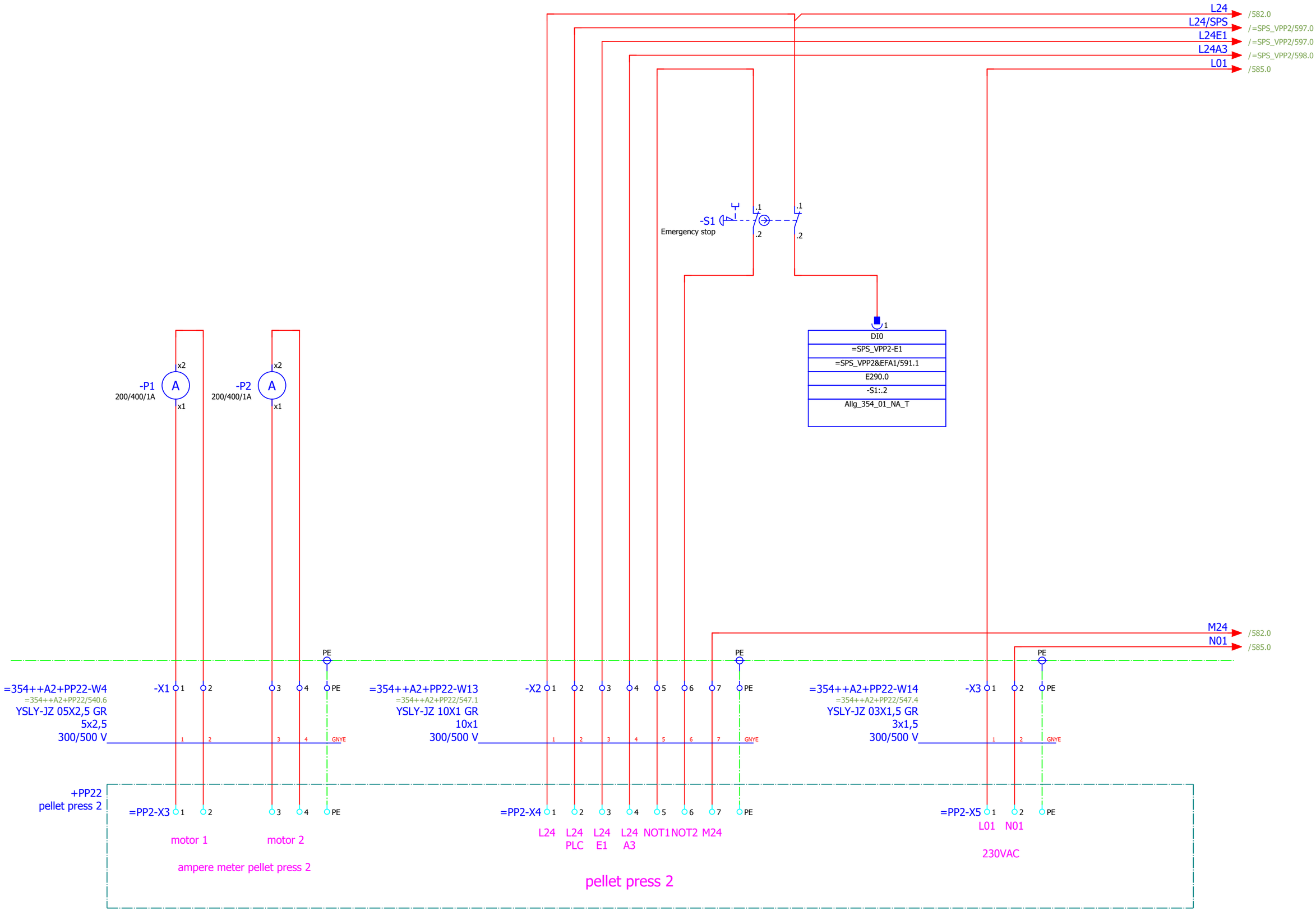
L24
/582.0
L24/SPS
/=SPS_VPP2/597.0
L24E1
/=SPS_VPP2/597.0
L24A3
/=SPS_VPP2/598.0
L01
/585.0
-S1
Emergency stop
.1
.2
DI0
=SPS_VPP2-E1
=SPS_VPP2&EFA1/591.1
E290.0
-S1:.2
Allg_354_01_NA_T
-P1
200/400/1A
-P2
200/400/1A
x1
x2
M24
/582.0
N01
/585.0
PE
=354++A2+PP22-W4
=354++A2+PP22/540.6
YSLY-JZ 05X2,5 GR
5x2,5
300/500 V
-X1
GNYE
=354++A2+PP22-W13
=354++A2+PP22/547.1
YSLY-JZ 10X1 GR
10x1
300/500 V
-X2
=354++A2+PP22-W14
=354++A2+PP22/547.4
YSLY-JZ 03X1,5 GR
3x1,5
300/500 V
-X3
+PP22
pellet press 2
=PP2-X3
motor 1
motor 2
ampere meter pellet press 2
=PP2-X4
L24
L24 PLC
L24 E1
L24 A3
NOT1
NOT2
M24
pellet press 2
=PP2-X5
L01
N01
230VAC

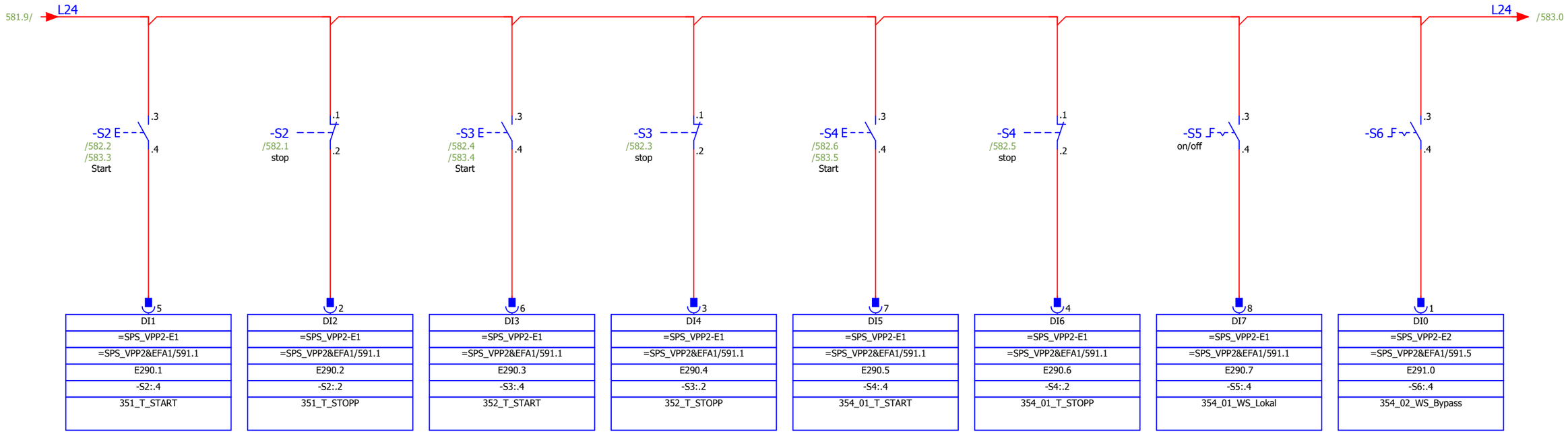
581.9/
L24
/583.0
-S2
/582.2
/583.3
Start
-S2
/582.1
stop
-S3
/582.4
/583.4
Start
-S3
/582.3
stop
-S4
/582.6
/583.5
Start
-S4
/582.5
stop
-S5
on/off
-S6
DI1 | =SPS_VPP2-E1 | =SPS_VPP2&EFA1/591.1 | E290.1 | -S2:.4 | 351_T_START
DI2 | =SPS_VPP2-E1 | =SPS_VPP2&EFA1/591.1 | E290.2 | -S2:.2 | 351_T_STOPP
DI3 | =SPS_VPP2-E1 | =SPS_VPP2&EFA1/591.1 | E290.3 | -S3:.4 | 352_T_START
DI4 | =SPS_VPP2-E1 | =SPS_VPP2&EFA1/591.1 | E290.4 | -S3:.2 | 352_T_STOPP
DI5 | =SPS_VPP2-E1 | =SPS_VPP2&EFA1/591.1 | E290.5 | -S4:.4 | 354_01_T_START
DI6 | =SPS_VPP2-E1 | =SPS_VPP2&EFA1/591.1 | E290.6 | -S4:.2 | 354_01_T_STOPP
DI7 | =SPS_VPP2-E1 | =SPS_VPP2&EFA1/591.1 | E290.7 | -S5:.4 | 354_01_WS_Lokal
DI0 | =SPS_VPP2-E2 | =SPS_VPP2&EFA1/591.5 | E291.0 | -S6:.4 | 354_02_WS_Bypass
581.9/
M24
/583.0
feeding screw Pos. 351 start
feeding screw Pos. 351 stop
conditioner Pos. 352 start
conditioner Pos. 352 stop
pellet press Pos. 354 start
pellet press Pos. 354 stop
Automatic
Bypass

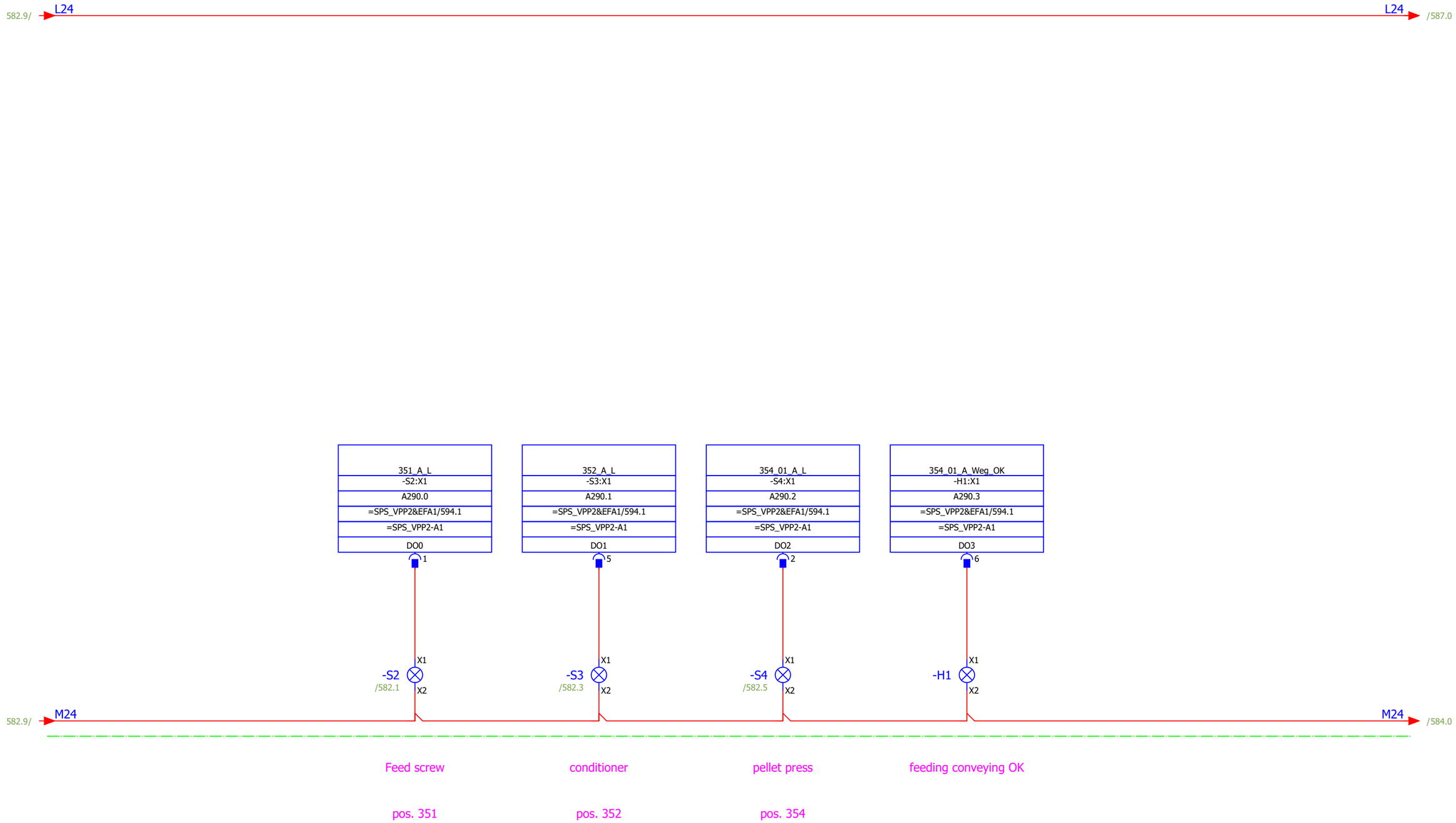

			Date	12.12.2019	Mixed feed plant Golden Poultry	BEYTEC ... your gateway to success	On-site control unit Press 2		= VPP2
			Ed.	willen					+ VPP22
			Appr		On-site control unit Press 2			1 : 1	Part II
Modification	Date	Name	Original	V:\EPLAN\Projekte\Company\Replaced by\2018\Feed Mill Alssad.elk	Replaced by				Page 583
									Page 605

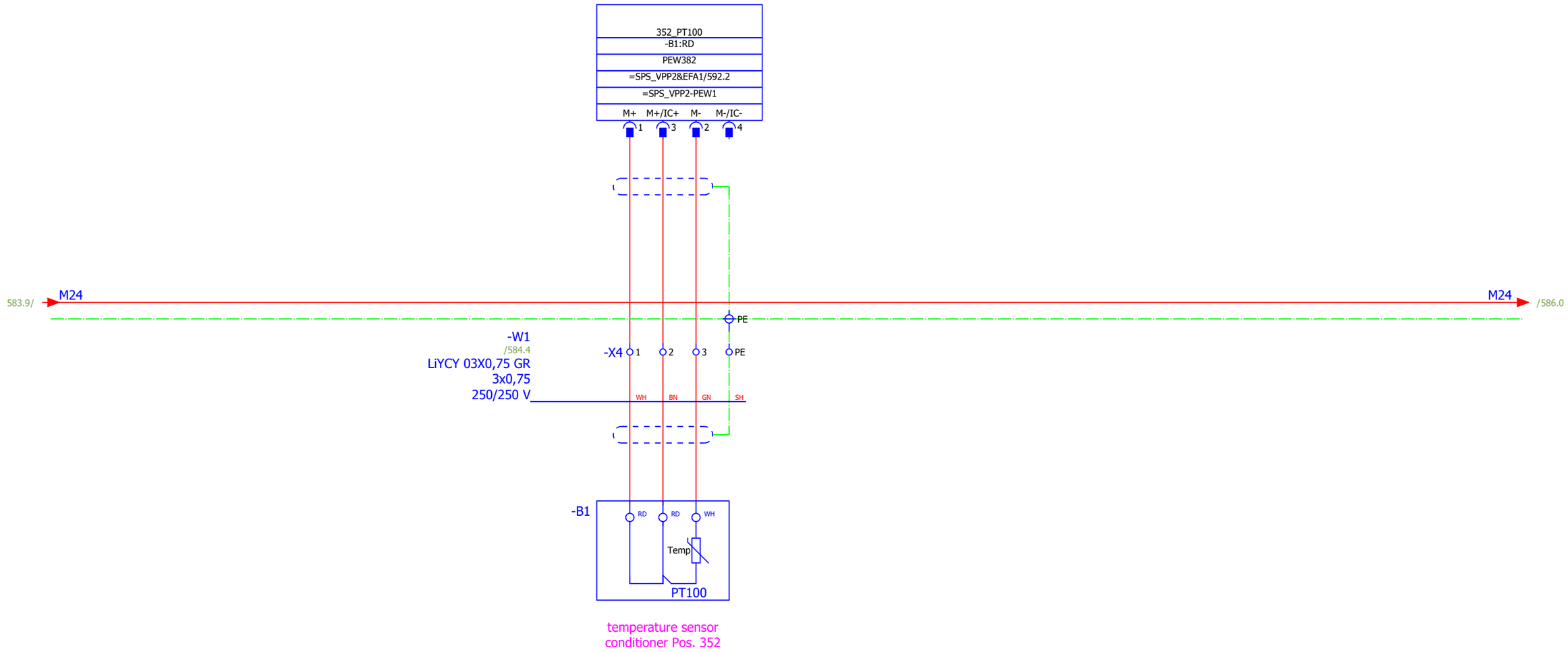

			Date	12.12.2019	Mixed feed plant Golden Poultry	BEYTEC ... your gateway to success	temperature sensor conditioner			= VPP2	
			Ed.	willen						+ VPP22	
			Appr		On-site control unit Press 2			1 : 1	Part II	Page	584
Modification	Date	Name	Original	V:\EPLAN\Projekte\Company\Replace\Beytec\2018\Feed Mill Alssad.elk	Replaced by					Page	605

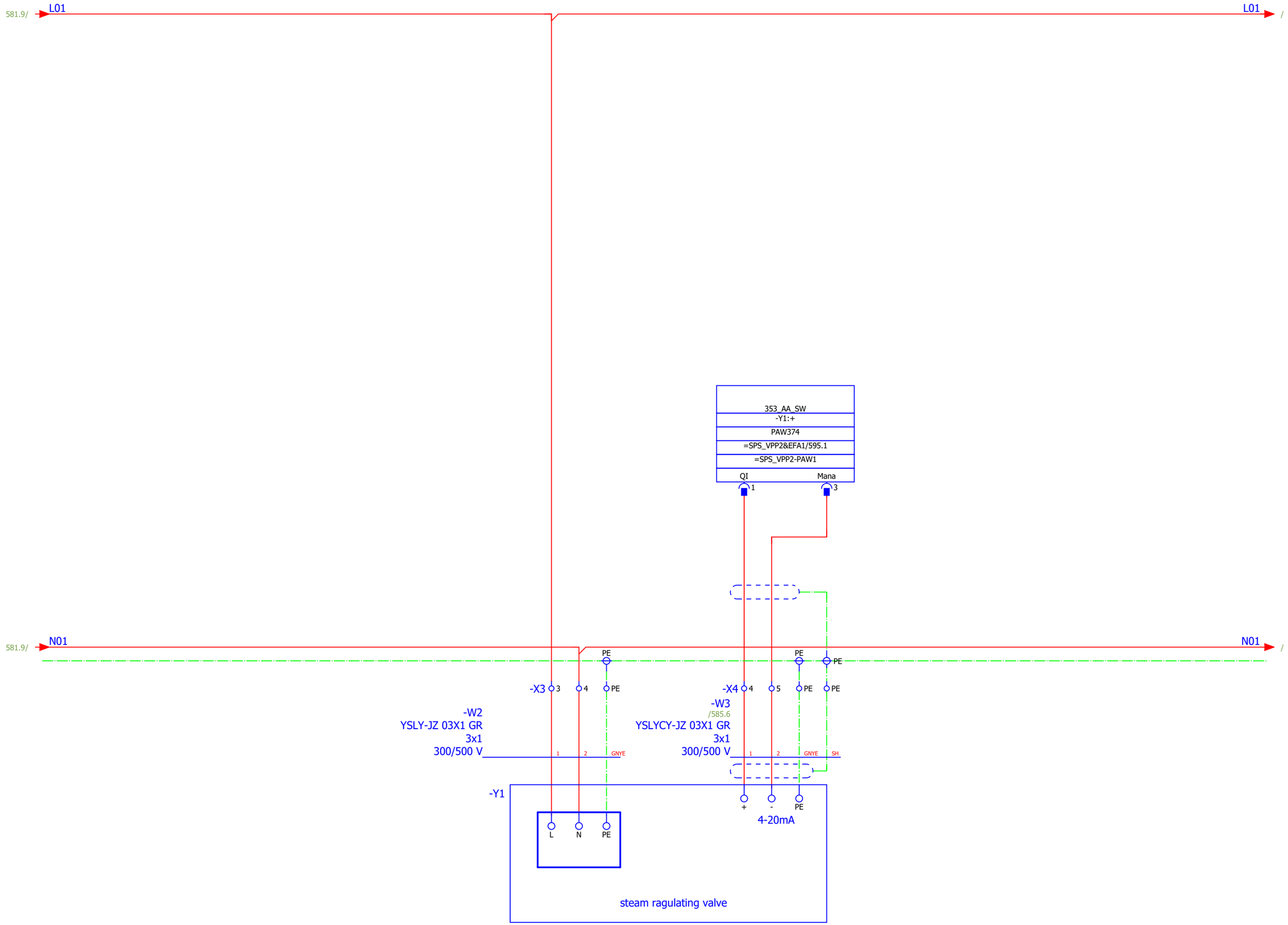

584

586

			Date	12.12.2019	Mixed feed plant Golden Poultry	BEYTEC ... your gateway to success	steam ragulating valve	= VPP2	
			Ed.	willen				+ VPP22	
			Appr		On-site control unit Press 2			1 : 1 / Part II	Page 585
Modification	Date	Name	Original	V:\EPLAN\Projekte\Company\Replace\Beytec\2018\Feed Mill Alssad.elk	Replaced by				Page 605

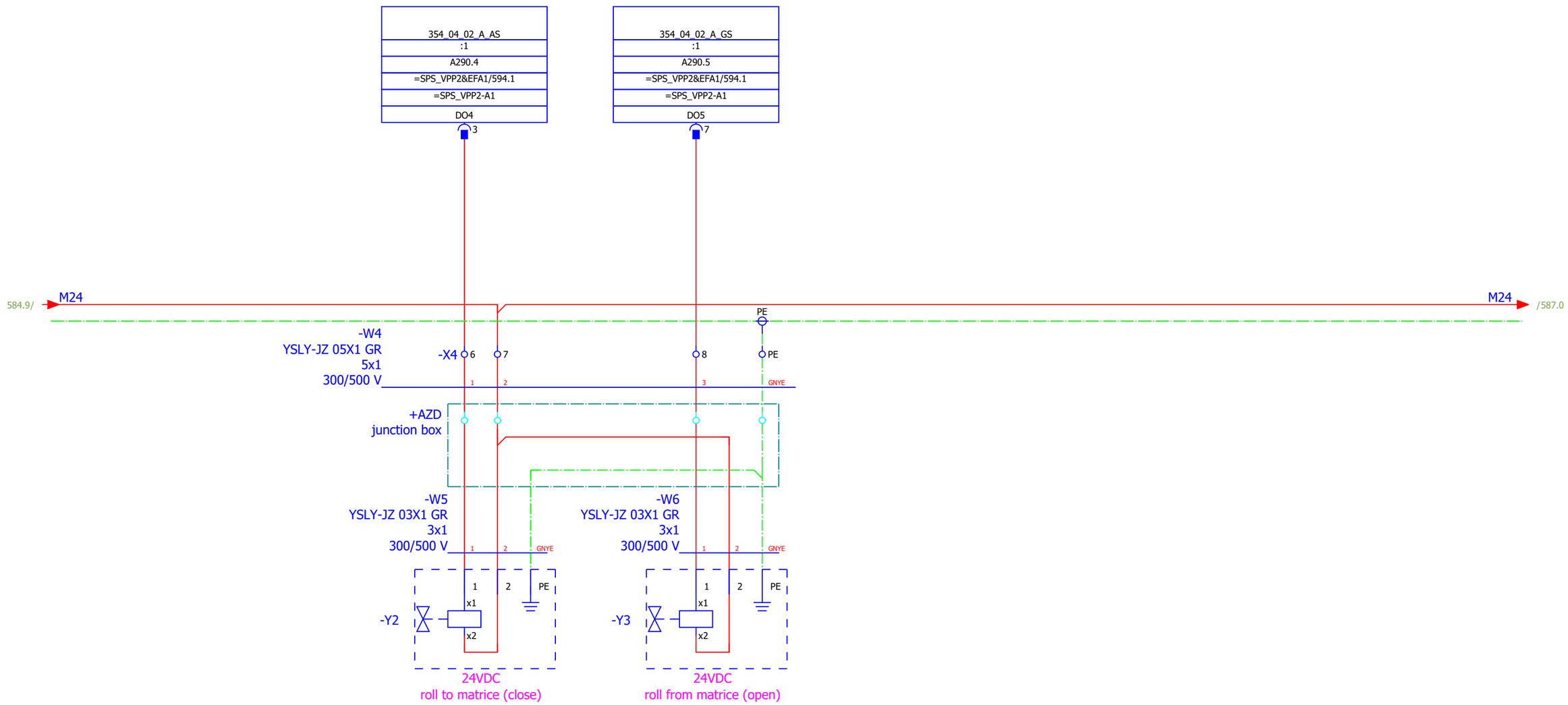

585

587

			Date	12.12.2019	Mixed feed plant Golden Poultry	BEYTEC ... your gateway to success	valve roller adjustment press 2	= VPP2	
			Ed.	willen				+ VPP22	
			Appr		On-site control unit Press 2		1 : 1	Part II	Page 586
Modification	Date	Name	Original	V:\EPLAN\Projekte\Company\Replace\Beytec\2018\Feed Mill Alssad.elk	Replaced by				Page 605

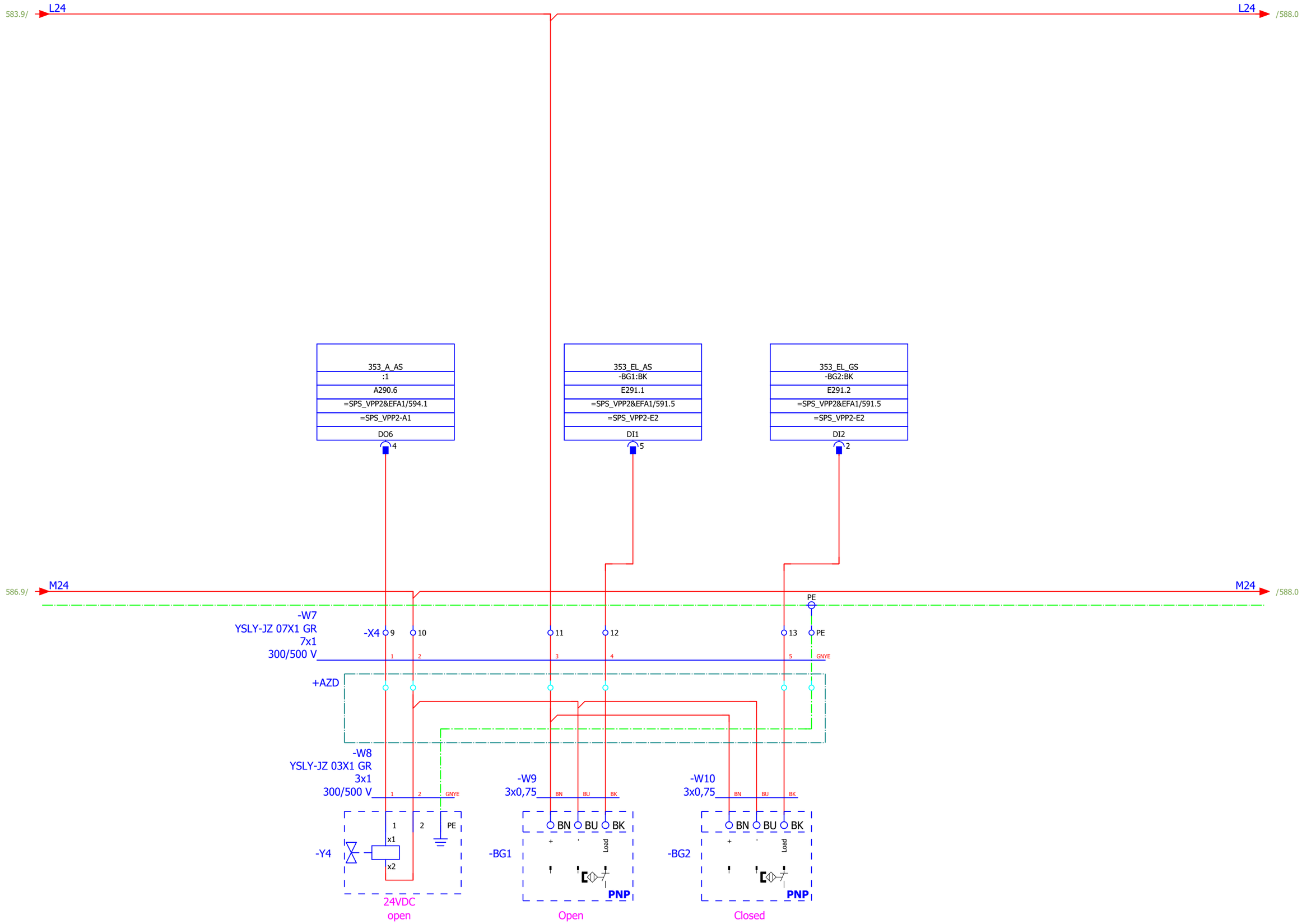

586

588

			Date	12.12.2019	Mixed feed plant Golden Poultry	BEYTEC ... your gateway to success	Pneumatic steam stop valve	= VPP2	
			Ed.	willen				+ VPP22	
			Appr		On-site control unit Press 2			1 : 1 / Part II	Page 587
Modification	Date	Name	Original	V:\EPLAN\Projekte\Company\Replace\Beytec\2018\Feed Mill Alssad.elk	Replaced by				Page 605

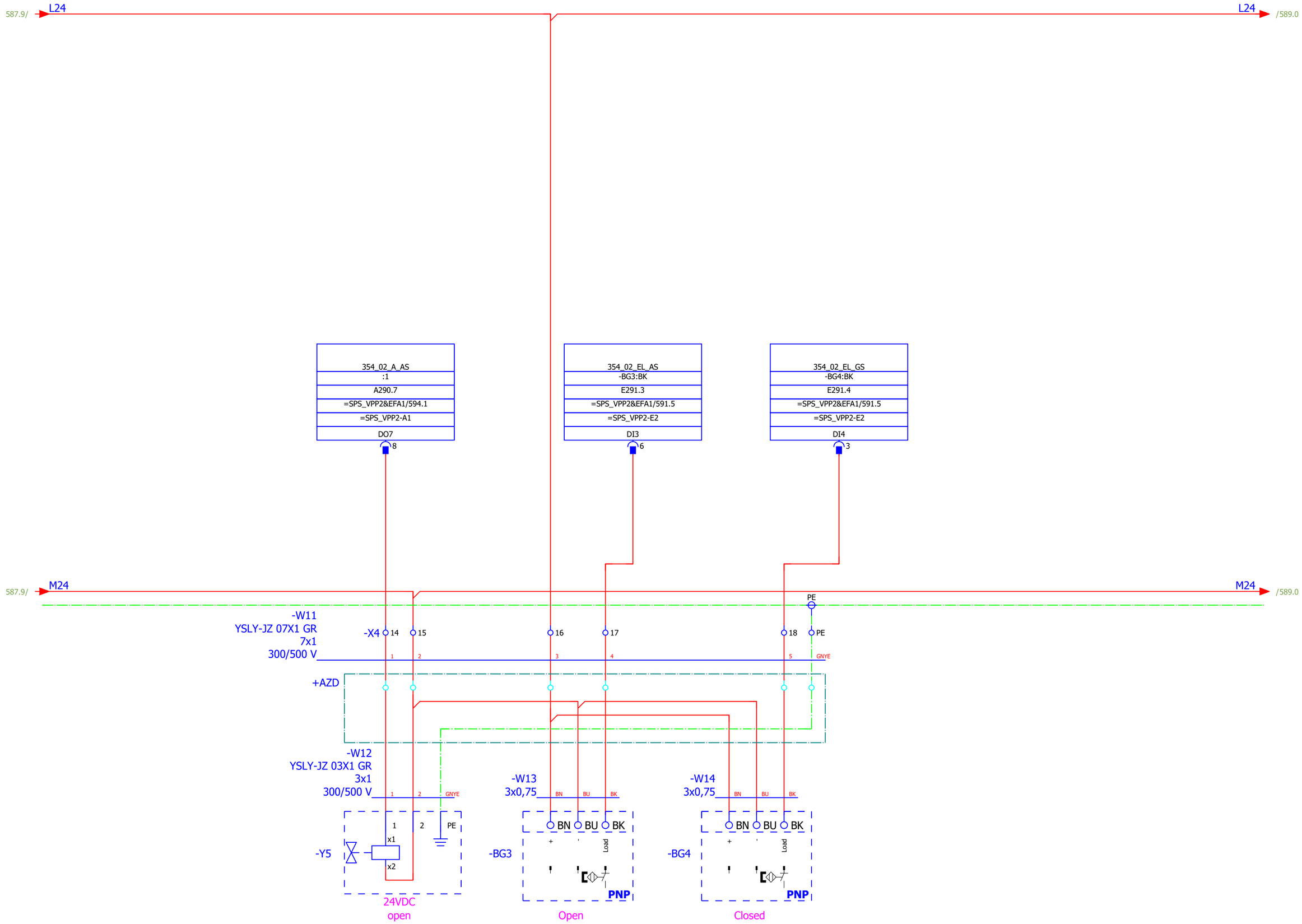

587

589

			Date	12.12.2019	Mixed feed plant Golden Poultry	BEYTEC ... your gateway to success	overflow flap	= VPP2	
			Ed.	willen				+ VPP22	
			Appr		On-site control unit Press 2			1 : 1 / Part II	Page 588
Modification	Date	Name	Original	V:\EPLAN\Projekte\Company\Replace\Beytec\2018\Feed Mill Alssad.elk	Replaced by				Page 605

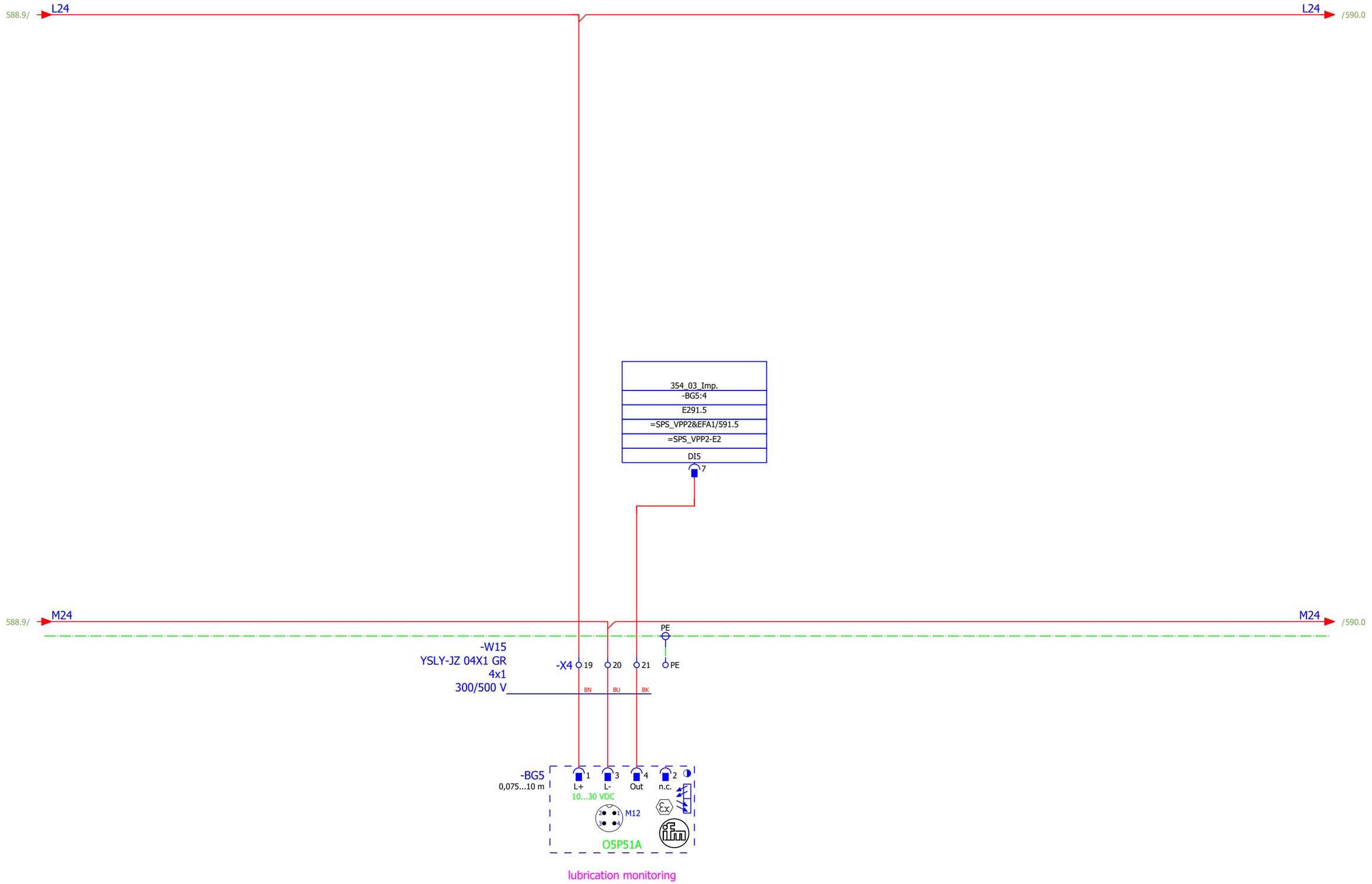

588 590

			Date	12.12.2019	Mixed feed plant Golden Poultry	BEYTEC ... your gateway to success	lubrication monitoring press 1	= VPP2	
			Ed.	willen				+ VPP22	
			Appr		On-site control unit Press 2		1 : 1	Part II	Page 589
Modification	Date	Name	Original	V:\EPLAN\Projekte\Company\Replace\Beytec\2018\Feed Mill Alssad.elk	Replaced by				Page 605

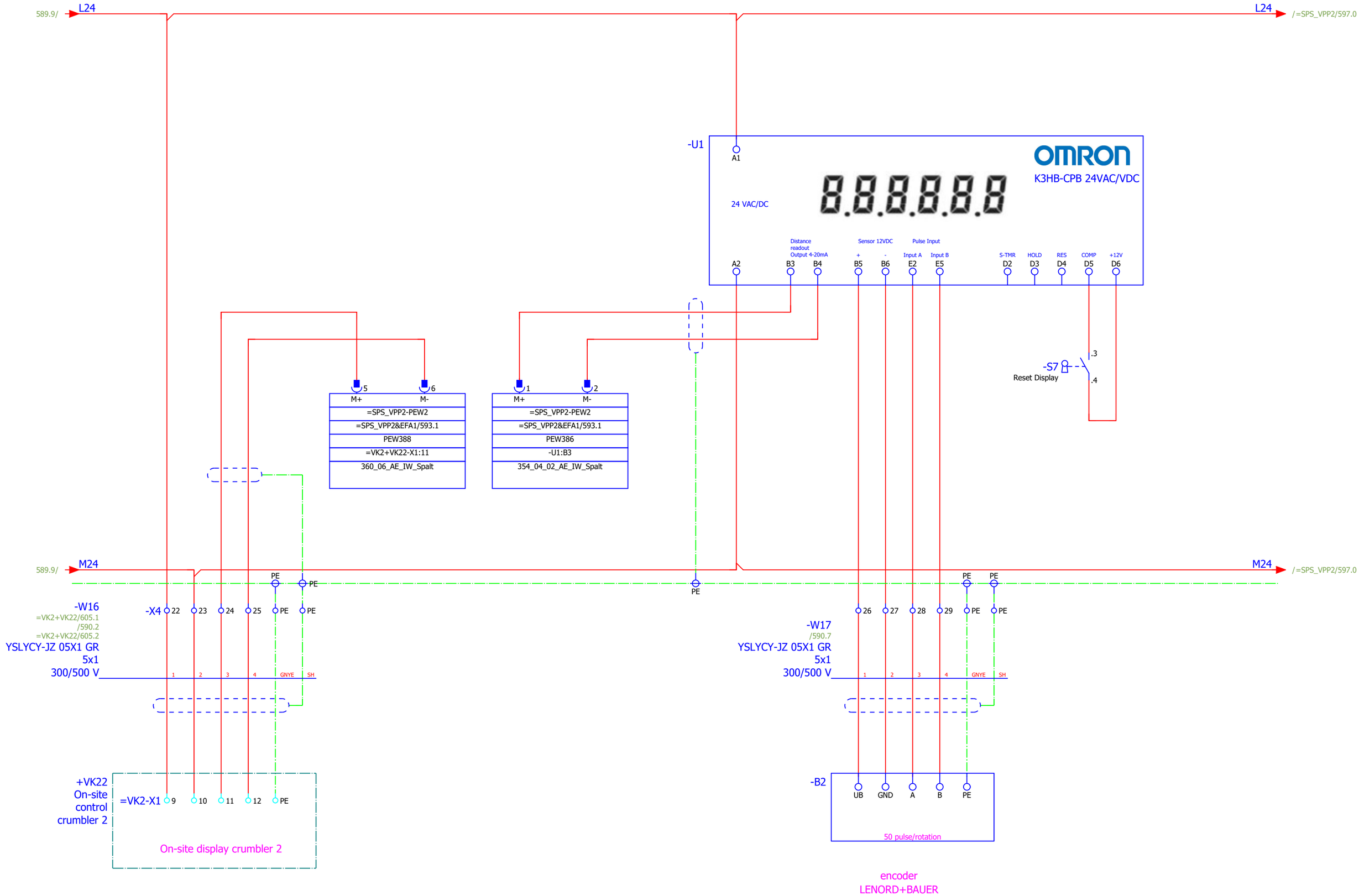

589

=VK1+VK21/576

			Date	12.12.2019	Mixed feed plant Golden Poultry	BEYTEC ... your gateway to success	Omron distance display		= VPP2
			Ed.	willen					+ VPP22
			Appr		On-site control unit Press 2			1 : 1	Part II
Modification	Date	Name	Original	V:\EPLAN\Projekte\Company\Beytec\2018\Feed Mill Alssad.elk	Replaced by				Page 590
									Page 605

-E1
&ETC/600.4

ET200S SIEMENS
8 DI DC 24 V

E290.0	1 DI0	=VPP2&EFS/581.V1	=VPP2-S1:.2	Allg_354_01_NA_T
E290.2	2 DI2	=VPP2&EFS/582.V2	=VPP2-S2:.2	351_T_STOPP
E290.4	3 DI4	=VPP2&EFS/582.V4	=VPP2-S3:.2	352_T_STOPP
E290.6	4 DI6	=VPP2&EFS/582.V6	=VPP2-S4:.2	354_01_T_STOPP
E290.1	5 DI1	=VPP2&EFS/582.V1	=VPP2-S2:.4	351_T_START
E290.3	6 DI3	=VPP2&EFS/582.V3	=VPP2-S3:.4	352_T_START
E290.5	7 DI5	=VPP2&EFS/582.V5	=VPP2-S4:.4	354_01_T_START
E290.7	8 DI7	=VPP2&EFS/582.V7	=VPP2-S5:.4	354_01_WS_Lokal

6ES7131-4BF00-0AA0
+ TM-E15C24-01

-E2
&ETC/600.4

ET200S SIEMENS
8 DI DC 24 V

E291.0	1 DI0	=VPP2&EFS/582.V2	=VPP2-S6:.4	354_02_WS_Bypass
E291.2	2 DI2	=VPP2&EFS/587.V2	=VPP2-BG2:BK	353_EL_GS
E291.4	3 DI4	=VPP2&EFS/588.V2	=VPP2-BG4:BK	354_02_EL_GS
E291.6	4 DI6			Spare
E291.1	5 DI1	=VPP2&EFS/587.V1	=VPP2-BG1:BK	353_EL_AS
E291.3	6 DI3	=VPP2&EFS/588.V1	=VPP2-BG3:BK	354_02_EL_AS
E291.5	7 DI5	=VPP2&EFS/589.V2	=VPP2-BG5:4	354_03_Imp.
E291.7	8 DI7			Spare

6ES7131-4BF00-0AA0
+ TM-E15C24-01

			Date	12.12.2019	Mixed feed plant Golden Poultry	BEYTEC ... your gateway to success	overview inputs	= SPS_VPP2
			Ed.	willen	On-site control unit Press 2			+ VPP22
			Appr				1 : 1	Part II
Modification	Date	Name	Original	V:\EPLAN\Projekte\Company\Beytec\2018\Feed Mill Alssad.elk	Replaced by			Page 591
								Page 605

-PEW1
&ETC/600.4

ET200S SIEMENS
2 AI RTD STANDARD

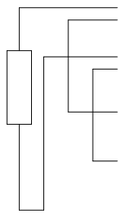

PEW382	1 M+	=VPP2&EFS/584.4:VPP2-B1:RD	352_PT100
PEW382	2 M-	=VPP2&EFS/584.4	2074_01_PT100
PEW382	3 M+/IC+	=VPP2&EFS/584.4	2074_01_PT100
PEW382	4 M-/IC-	=VPP2&EFS/584.4	2074_01_PT100

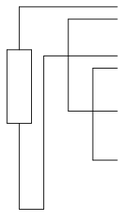

PEW384	5 M+		Spare
PEW384	6 M-		
PEW384	7 M+/IC+		
PEW384	8 M-/IC-		

6ES7134-4JB51-0AB0
+ TM-E15C24-01

-PEW2
&ETC/600.5

ET200S SIEMENS
2 AI I 4-wire STANDARD

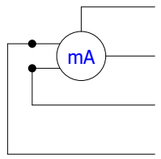

PEW386	1	M+	=VPP2&EFS/590.2	354_04_02_AE_IW_Spalt
PEW386	2	M-	=VPP2&EFS/590.4	2076_01_07_AE_IW_Spalt
	3	DC24V		
	4	Mana		

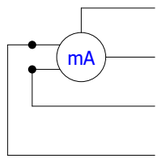

PEW388	5	M+	=VPP2&EFS/590.2	360_06_AE_IW_Spalt
PEW388	6	M-	=VPP2&EFS/590.3	2082_01_06_AE_IW_Spalt
	7	DC24V		
	8	Mana		

6ES7134-4GB11-0AB0
+ TM-E15C24-01

			Date	12.12.2019	Mixed feed plant Golden Poultry	BEYTEC ... your gateway to success	overview analog inputs	= SPS_VPP2	
			Ed.	willen				+ VPP22	
			Appr		On-site control unit Press 2			1 : 1 / Part II	Page 593
Modification	Date	Name	Original	V:\EPLAN\Projekte\Company\Beytec\2018\Feed Mill Alssad.elk	Replaced by				Page 605

Replaced by

-A1
&ETC/600.6

ET200S SIEMENS
8 DO DC24V 0,5A

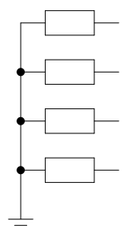

A290.0	1/QX.0/DO0	1 DO0	=VPP2&EFS/583=VPP2-S2:X1	351_A_L
A290.2	2/QX.2/DO2	2 DO2	=VPP2&EFS/583=VPP2-S4:X1	354_01_A_L
A290.4	3/QX.4/DO4	3 DO4	=VPP2&EFS/586+13	354_04_02_A_AS
A290.6	4/QX.6/DO6	4 DO6	=VPP2&EFS/587+13	353_A_AS

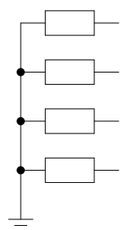

A290.1	5/QX.1/DO1	5 DO1	=VPP2&EFS/583=VPP2-S3:X1	352_A_L
A290.3	6/QX.3/DO3	6 DO3	=VPP2&EFS/583=VPP2-H1:X1	354_01_A_Weg_OK
A290.5	7/QX.5/DO5	7 DO5	=VPP2&EFS/586+14	354_04_02_A_GS
A290.7	8/QX.7/DO7	8 DO7	=VPP2&EFS/588+13	354_02_A_AS

6ES7132-4BF00-0AA0
+ TM-E15C24-01

			Date	12.12.2019	Mixed feed plant Golden Poultry	BEYTEC ... your gateway to success	overview outputs		= SPS_VPP2
			Ed.	willen					+ VPP22
			Appr		On-site control unit Press 2			1 : 1	Part II	Page 594
Modification	Date	Name	Original	V:\EPLAN\Projekte\Company\Beytec\2018\Feed Mill Alssad.elk	Replaced by				Page 605

-PAW1
&ETC/600.6

ET200S
2 AO I STANDARD

SIEMENS

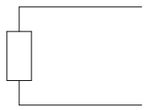

PAW374	1 QI	=VPP2&EFS/585.VPP2-Y1:+	353_AA_SW
2	2		
	3 Mana	=VPP2&EFS/585.6	
4	4		

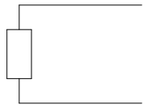

PAW376	5 QI		Spare
6	6		
	7 Mana		
8	8		

6ES7135-4GB01-0AB0
+ TM-E15C24-01

			Date	12.12.2019	Mixed feed plant Golden Poultry	BEYTEC ... your gateway to success	overview analog outputs
			Ed.	willen			
			Appr		On-site control unit Press 2		
Modification	Date	Name	Original	V:\EPLAN\Projekte\Company\Beytec\2018\Feed Mill Alssad.elk	Replaced by		

= SPS_VPP2
+ VPP22
1 : 1 | Part II | Page 595 | Page 605

-K2
&ETC/600.3
&EFS/598.1
&EFS/599.2
Rack X
Slot Y
SIE.6AV2124-0GC01-0AX0

COMFORT PANEL SIEMENS
TP700 Touch 7"

-X80:1 L+	&EFS/599.3	
-X80:2 M	&EFS/599.4	
P1: PN	&EFS/599.5	
P2: PN		
-X2: DP		
-X60: USB		
-X61: USB		
-X62: USB		
-X90:1 Audio In		
-X90:2 Audio Out		
PE		

6AV2124-0GC01-0AX0

			Date	12.12.2019	Mixed feed plant Golden Poultry	BEYTEC ... your gateway to success	operating panel	= SPS_VPP2
			Ed.	willen				+ VPP22
			Appr		On-site control unit Press 2		1 : 1	Part II
Modification	Date	Name	Original	V:\EPLAN\Projekte\Company\Alsad\Beytec\2018\Feed Mill Alssad.elk	Replaced by			Page 596 / Page 605

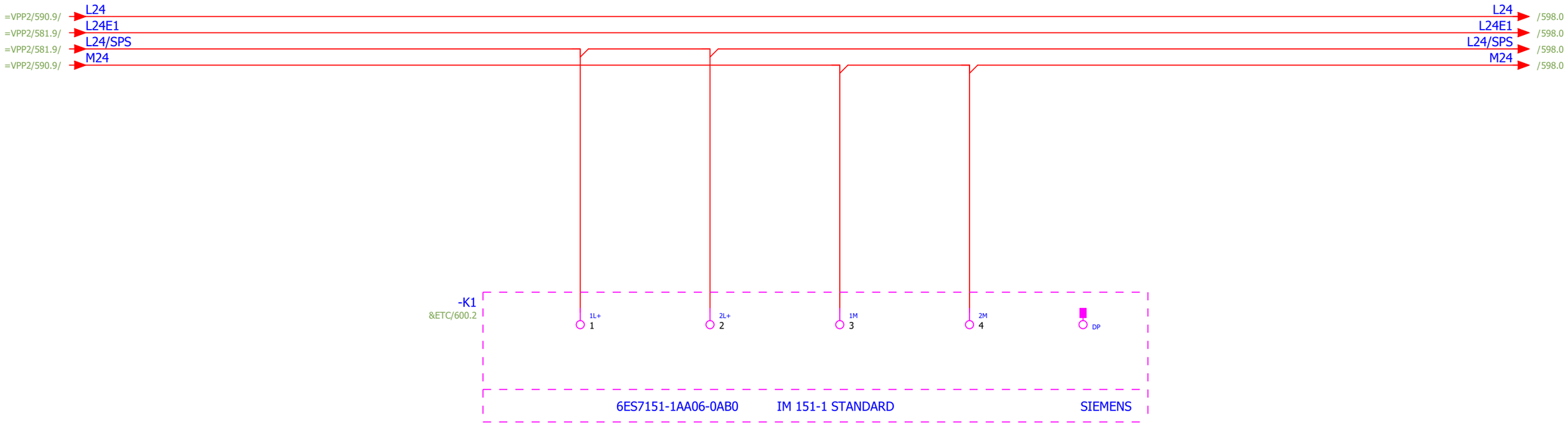

			Date	12.12.2019	Mixed feed plant Golden Poultry	BEYTEC ... your gateway to success	PLC power supply bus coupler	= SPS_VPP2	
			Ed.	willen				+ VPP22	
			Appr		On-site control unit Press 2			1 : 1 / Part II	Page 597
Modification	Date	Name	Original	V:\EPLAN\Projekte\Company\Replace\Beytec\2018\Feed Mill Alssad.elk	Replaced by				Page 605

Replaced by

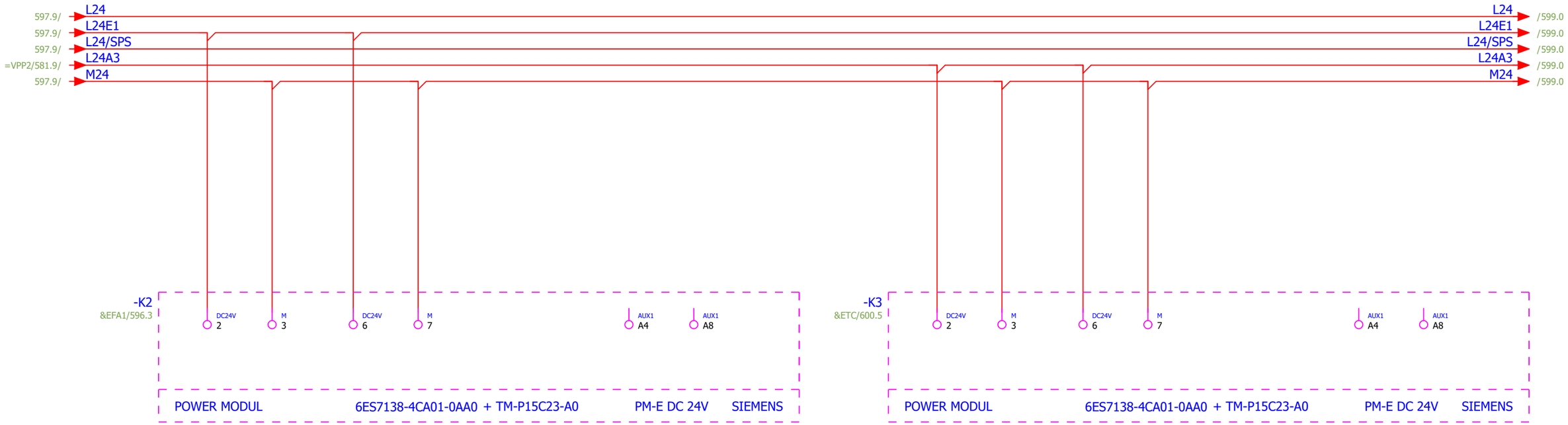

			Date	12.12.2019	Mixed feed plant Golden Poultry	BEYTEC ... your gateway to success	PLC power supply power module	= SPS_VPP2	
			Ed.	willen				+ VPP22	
			Appr		On-site control unit Press 2			1 : 1 / Part II	Page 598
Modification	Date	Name	Original	V:\EPLAN\Projekte\Company\Replace\Beytec\2018\Feed Mill Alssad.elk	Replaced by				Page 605

Replaced by BEYTEC

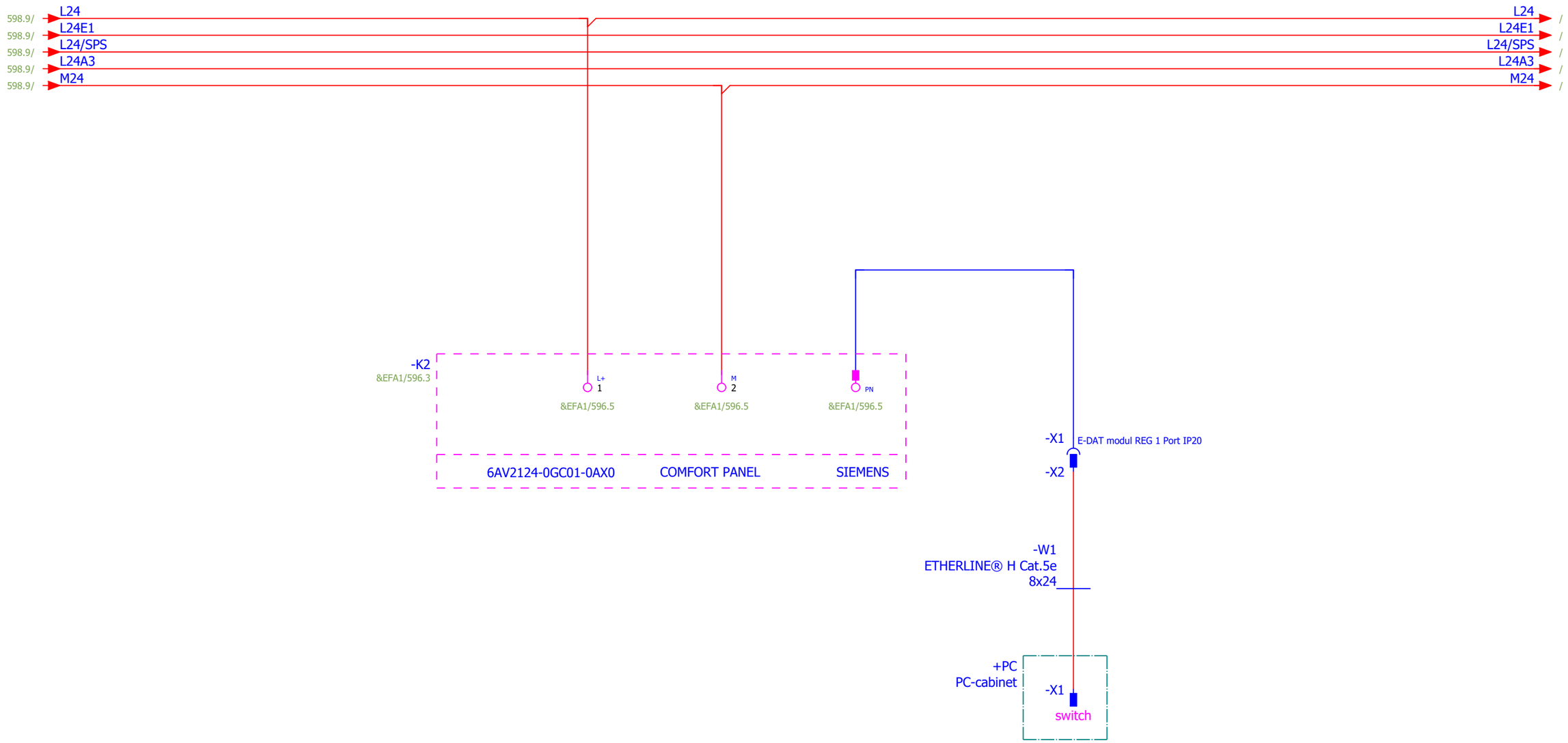

			Date	12.12.2019	Mixed feed plant Golden Poultry	BEYTEC ... your gateway to success	PLC power supply touchpanel	= SPS_VPP2	
			Ed.	willen				+ VPP22	
			Appr		On-site control unit Press 2		1 : 1	Part II	Page 599
Modification	Date	Name	Original	V:\EPLAN\Projekte\Company\Replace\Beytec\2018\Feed Mill Alssad.elk	Replaced by				Page 605

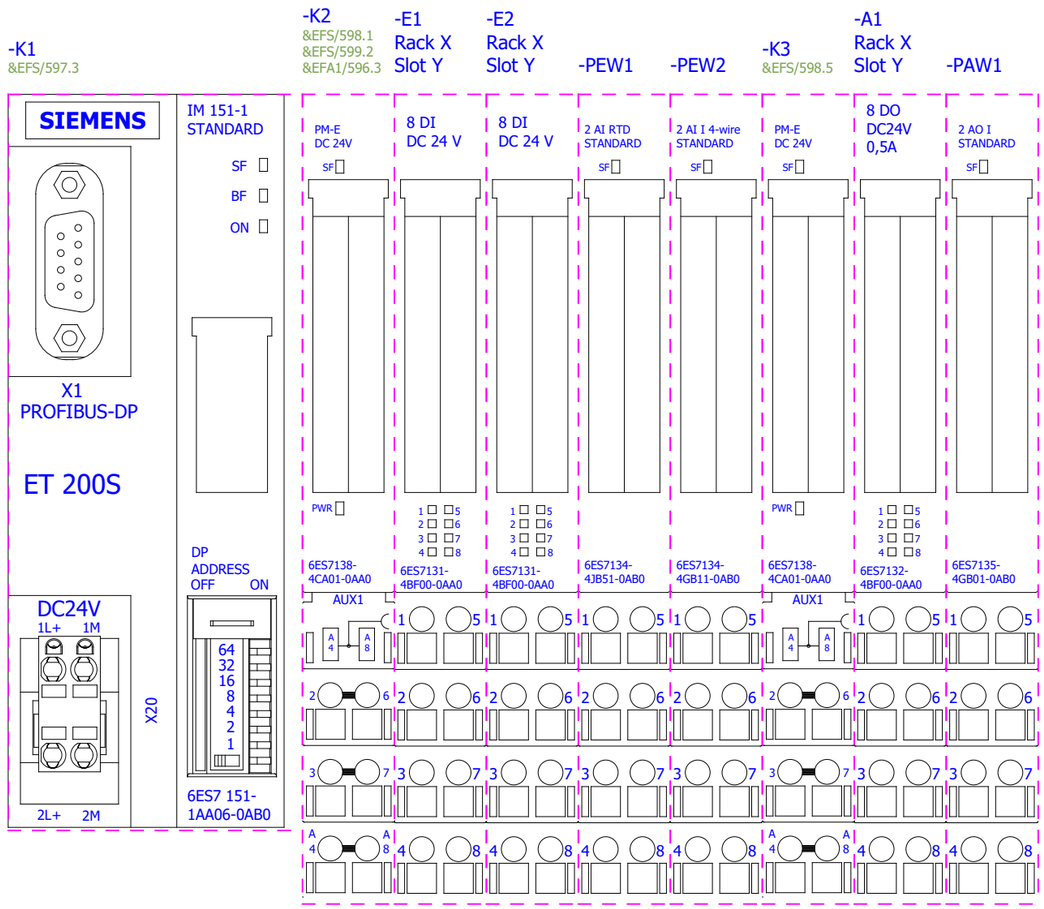
-K1
&EFS/597.3
-K2
&EFS/598.1
&EFS/599.2
&EFA1/596.3
-E1
Rack X
Slot Y
-E2
Rack X
Slot Y
-PEW1
-PEW2
-K3
&EFS/598.5
-A1
Rack X
Slot Y
-PAW1
SIEMENS
X1
PROFIBUS-DP
ET 200S
DC24V
1L+ 1M
2L+ 2M
X20
IM 151-1
STANDARD
SF
BF
ON
DP
ADDRESS
OFF ON
64
32
16
8
4
2
1
6ES7 151-
1AA06-0AB0
PM-E
DC 24V
8 DI
DC 24 V
8 DI
DC 24 V
2 AI RTD
STANDARD
2 AI I 4-wire
STANDARD
PM-E
DC 24V
8 DO
DC24V
0,5A
2 AO I
STANDARD
PWR
6ES7138-
4CA01-0AA0
6ES7131-
4BF00-0AA0
6ES7131-
4BF00-0AA0
6ES7134-
4JB51-0AB0
6ES7134-
4GB11-0AB0
6ES7138-
4CA01-0AA0
6ES7132-
4BF00-0AA0
6ES7135-
4GB01-0AB0
AUX1
AUX1

BEYTEC

... your gateway to success

Company / customer	BeyTec
Project description	Golden Poultry
Job number	Part II
Mounting location	On-site control crumbler 2

Technical data:

Operating voltage	400 V
Operating frequency	50 Hz
Operating current	
Power network	
Control voltage	24VDC
Protection class electrical	SK I
Degree of protection	IP54
Responsible for project	Willen

Created on	21.10.2019		
Edit date	12.12.2019	by (short name) willen	Number of pages 605

Table of contents

Column X: An automatically generated page was edited

F06_001_EN

Page	Page description	supplementary page field	Date	Edited by	X
+VK22&BAA/601	Title page / cover sheet		12.12.2019	willen	X
+VK22&BAB/602	Table of contents : +VK22&BAA/601 - =VK2+VK22&EFS/605		12.12.2019	willen	
+VK22&BPA/603	Summarized parts list : OMR.K3HB-CPB-24VAC/VDC - ETN.M22-D-S		12.12.2019	willen	X
+VK22&ETL1/604	Panel layout		12.12.2019	willen	
=VK2+VK22&EFS/605	Omron distance display		12.12.2019	willen	

Summarized parts list

F02_002_en_US

Order number	Quantity	Designation	Type number	Supplier
K3HB-CPB 24VAC/VDC	2	Digital panel indicators, 1/8 DIN advanced indicators, K3HB-C, -P, -R	K3HB-CPB 24VAC/VDC	OMR
RV3100	1	Solid shaft encoder	INCREMENTAL ENCODER BASIC LINE	IFM
216376	3	Contact element, 1N/O, front mount, 6. contact, screw connection	M22-K10	EATON
216392	3	Schildträger	M22S-ST-X	EATON
216887	1	Key-operated actuator, 2 positions, 0 I, maintained	M22-WRS	EATON
	3	Einbauadapter	M22-A	EATON
216590	2	Pushbutton, flush, black, momentary	M22-D-S	EATON

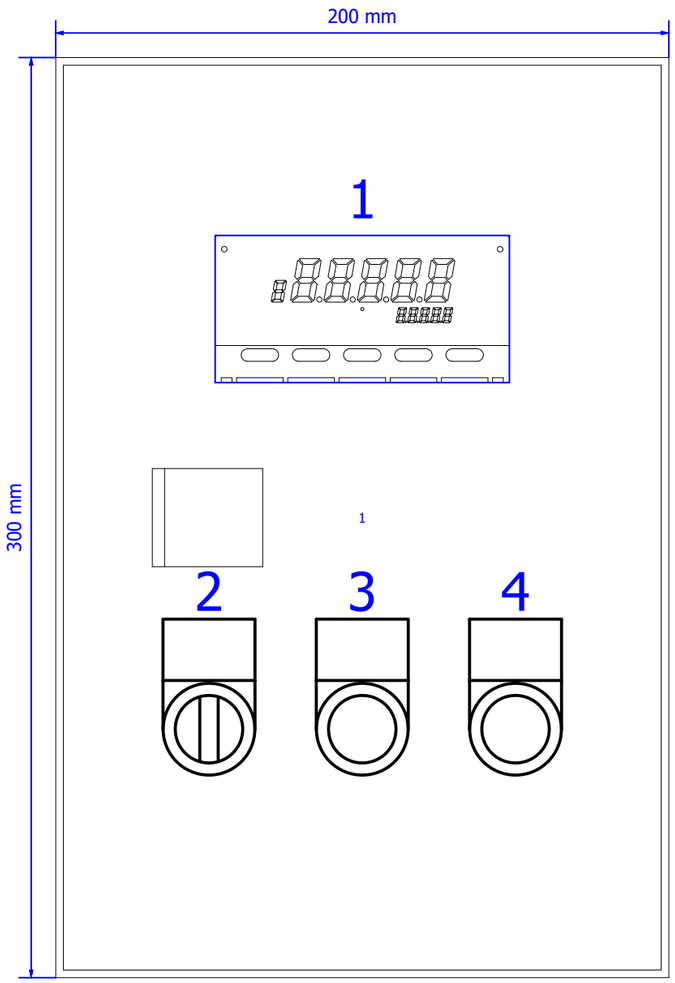

Key

1: Display Omron "Roller distance"

2: key switch "Reset Display"

3: pushbutton "Roller distance open"

4: pushbutton "Roller distance close"

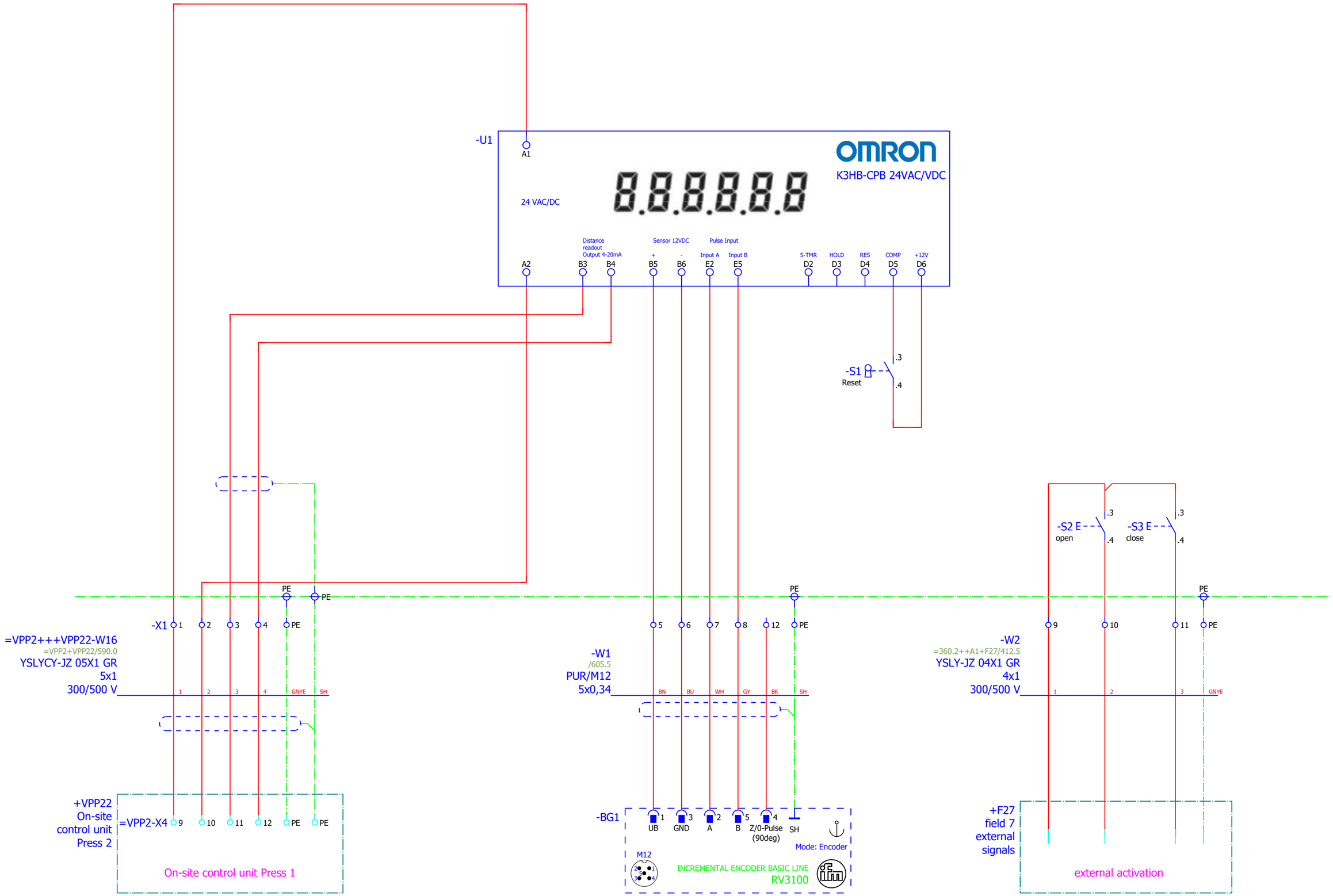

=VK1+VK21/576

=SPS_F6++A1+F26&EFA1/261

			Date	12.12.2019	Mixed feed plant Golden Poultry	BEYTEC ... your gateway to success	Omron distance display		= VK2
			Ed.	willen					+ VK22
			Appr		On-site control crumbler 2			1 : 1	Part II
Modification	Date	Name	Original	V:\EPLAN\Projekte\Company\Beytec\2018\Feed Mill Alssad.elk	Replaced by				Page 605
									Page 605