Lecture 5 : CNN

By : Khalil idrissi

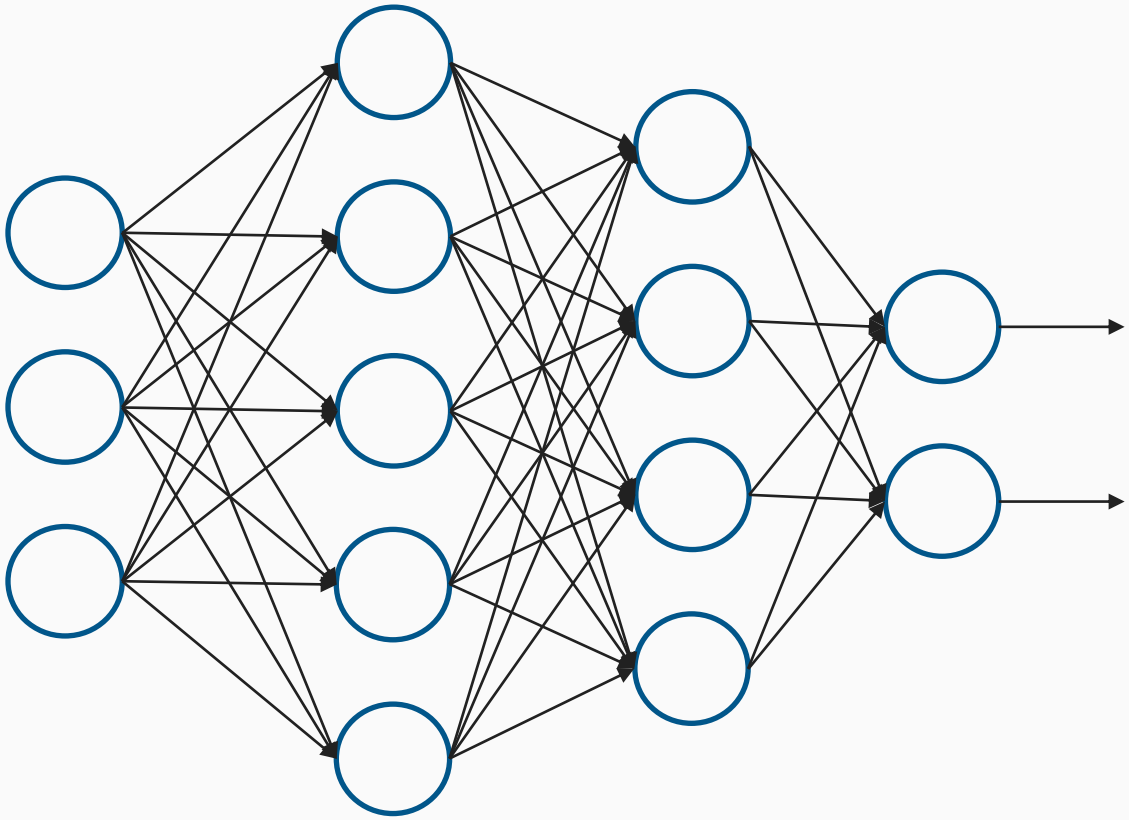

Problems with FCN

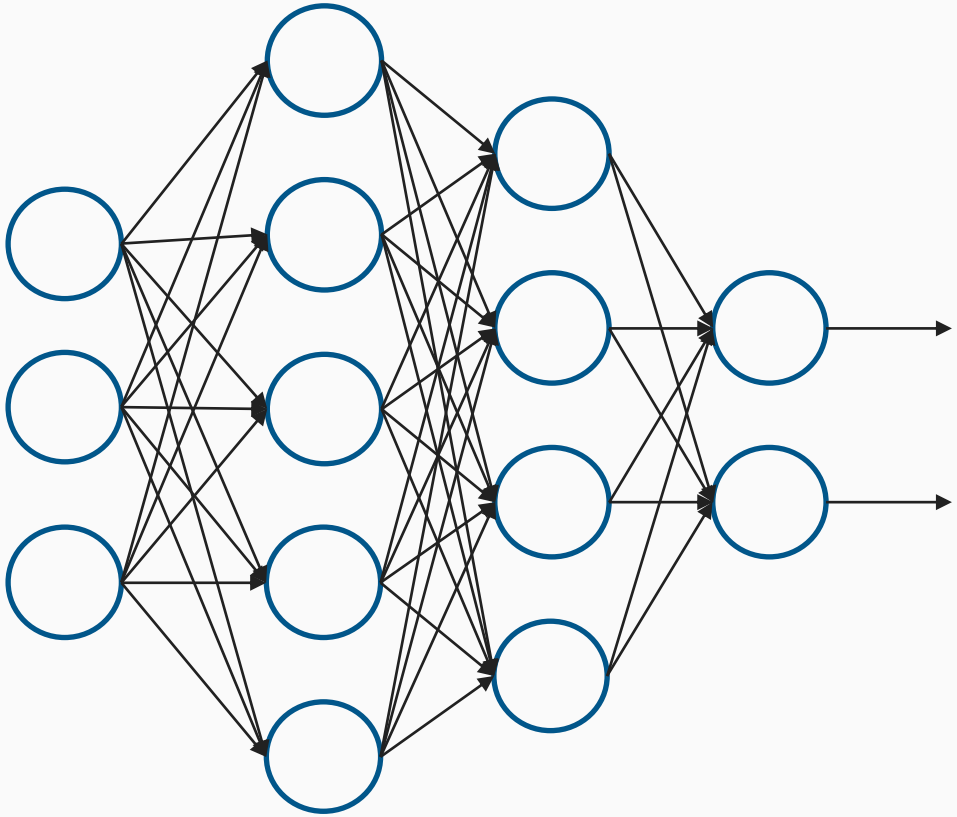

Problems with FCN

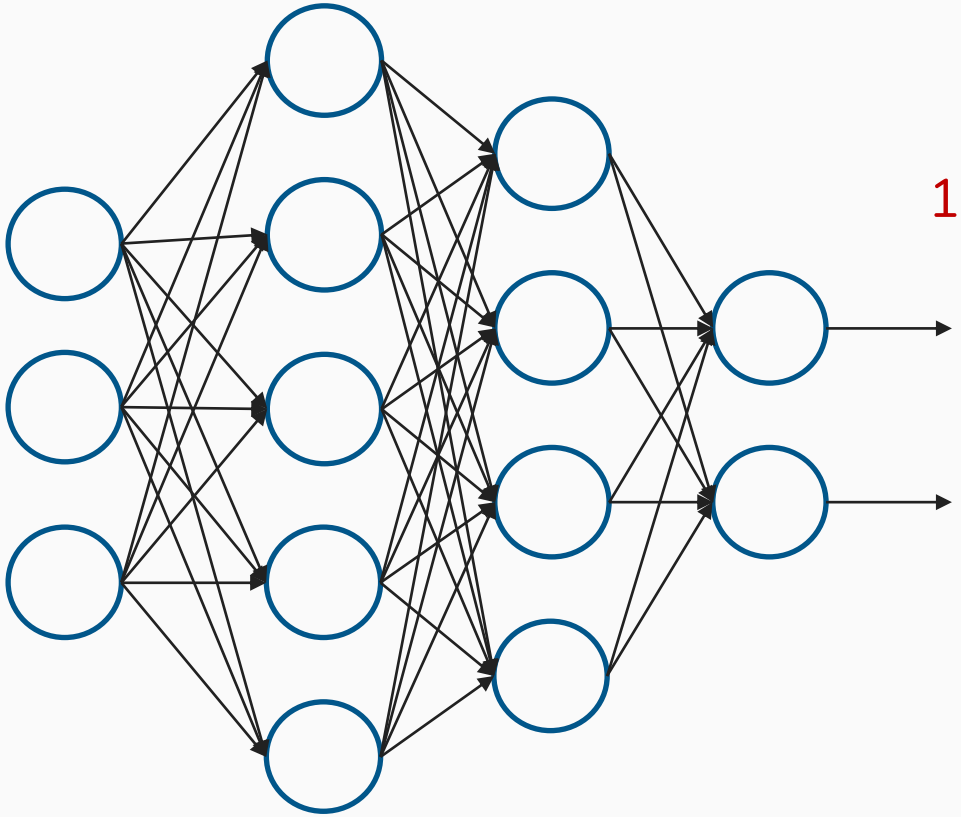

1-Explosive number of parameters

Problems with FCN

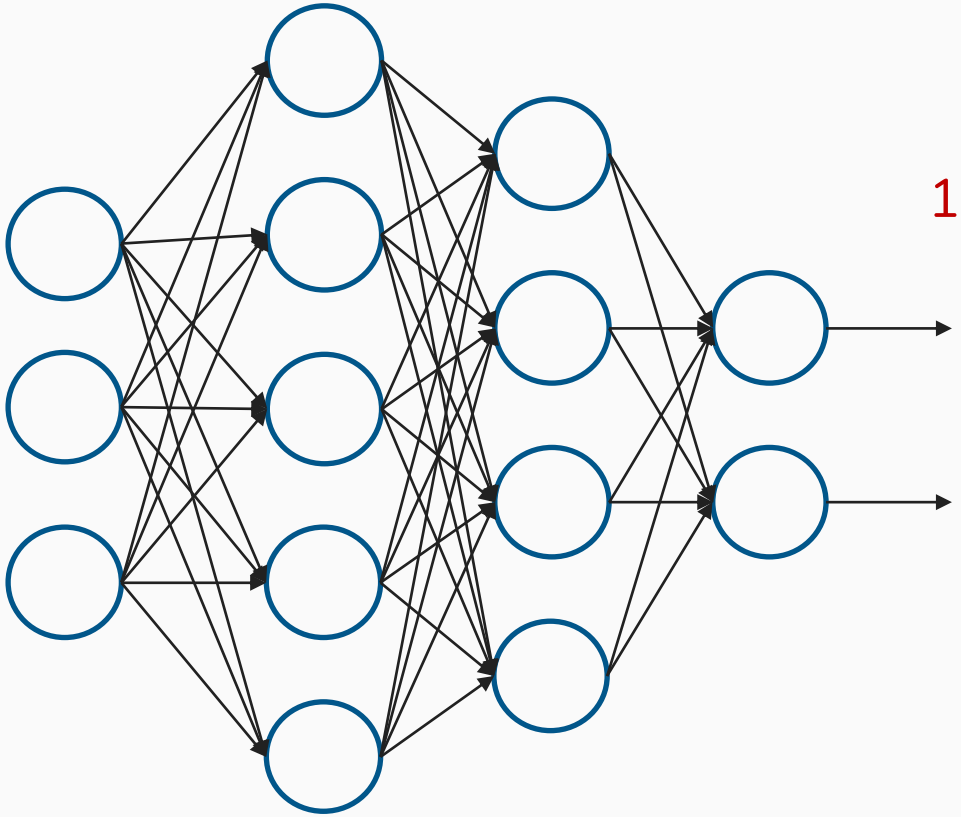

1-Explosive number of parameters

2-Lack of spatial reasoning

CNN to the rescue

CNN to the rescue

CNN : Convolutional Neural Network

CNN to the rescue

CNN : Convolutional Neural Network

It is a type of NN that uses convolution instead of Matrix multiplication

CNN to the rescue

CNN : Convolutional Neural Network

It is a type of NN that uses ~~convolution~~ instead of Matrix multiplication

CNN to the rescue

CNN : Convolutional Neural Network

Cross-correlation

It is a type of NN that uses ~~convolution~~ instead of Matrix multiplication

Ferq bin convolution w cross correlation site

Cross correlation

= convolution without flipping the kernel

5	0	5	0	5	7
15	7	81	5	2	5
3	9	0	1	3	7
2	13	0	4	5	0
26	70	11	0	7	1
1	155	5	9	90	5

*

-1	-1	-1
-1	8	-1
-1	-1	-1

26	0	1	2	5
1	0	4	3	7
70	13	0	5	0
155	5	7	7	1
11	9	9	90	5

-1	-1	-1
-1	8	-1
-1	-1	-1

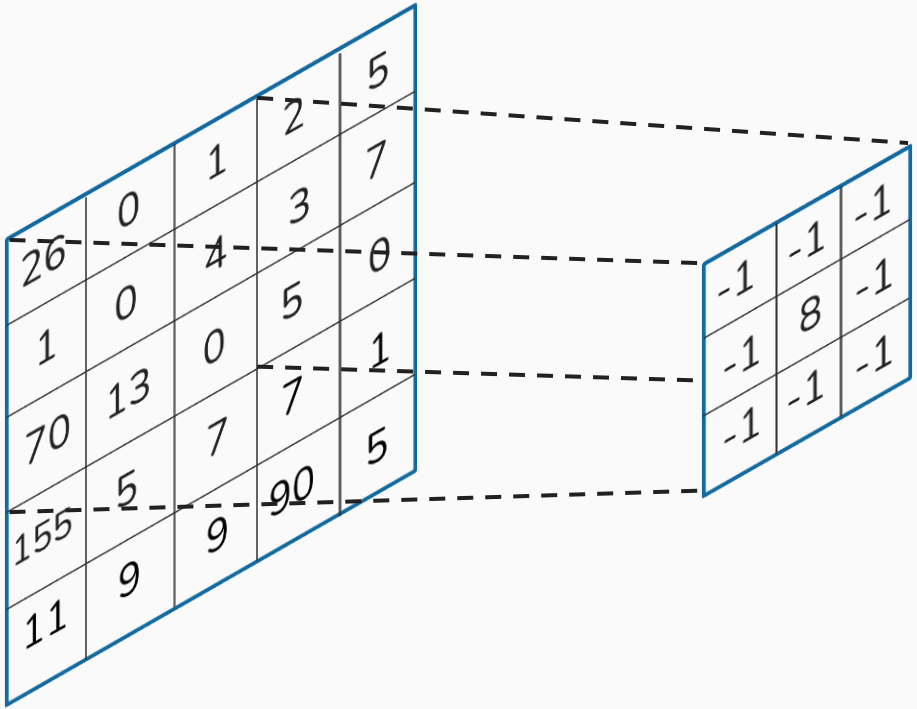
26 0 1 2 5
1 0 4 3 7
70 13 0 5 0
155 5 7 7 1
11 9 9 90 5
-1 -1 -1
-1 8 -1
-1 -1 -1

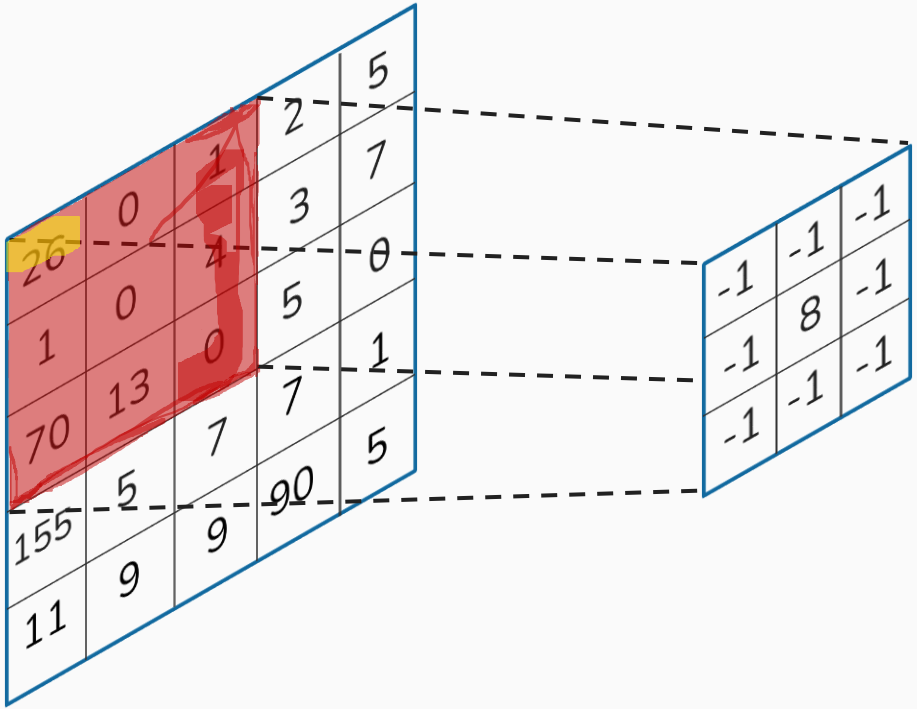
26
0
1
2
5
1
0
4
3
7
1
0
0
5
0
70
13
7
7
1
155
5
9
90
5
11
9
-1
-1
-1
-1
8
-1
-1
-1
-1

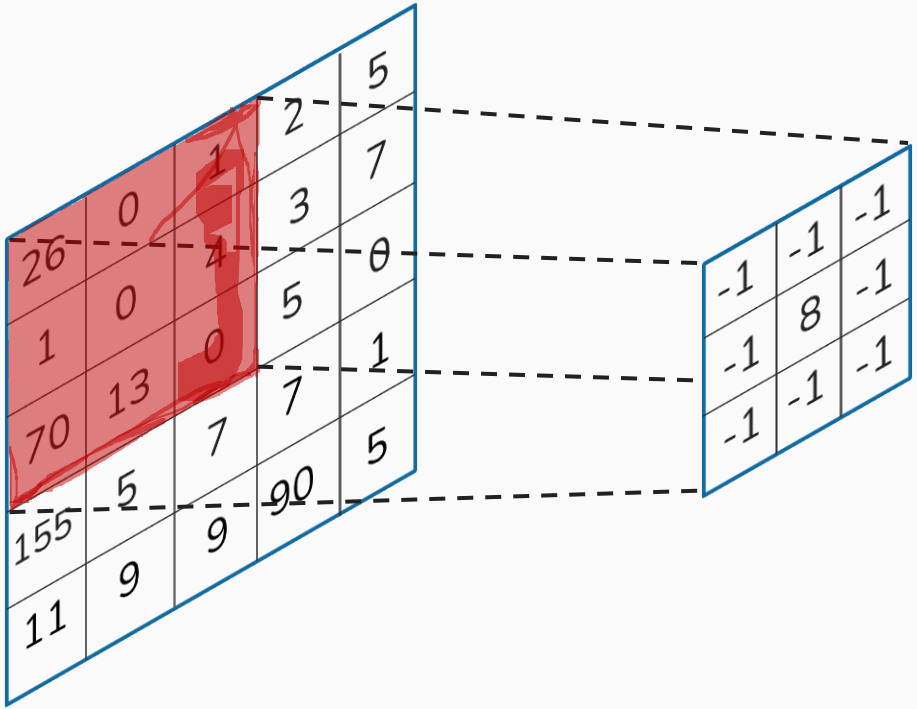

$$26 * (-1) + 0 * (-1) + 1 * (-1) + 1 * 0 + 4 * (-1) + 70 * -1 + 13 * (-1) + 0 * (-1) = -114$$

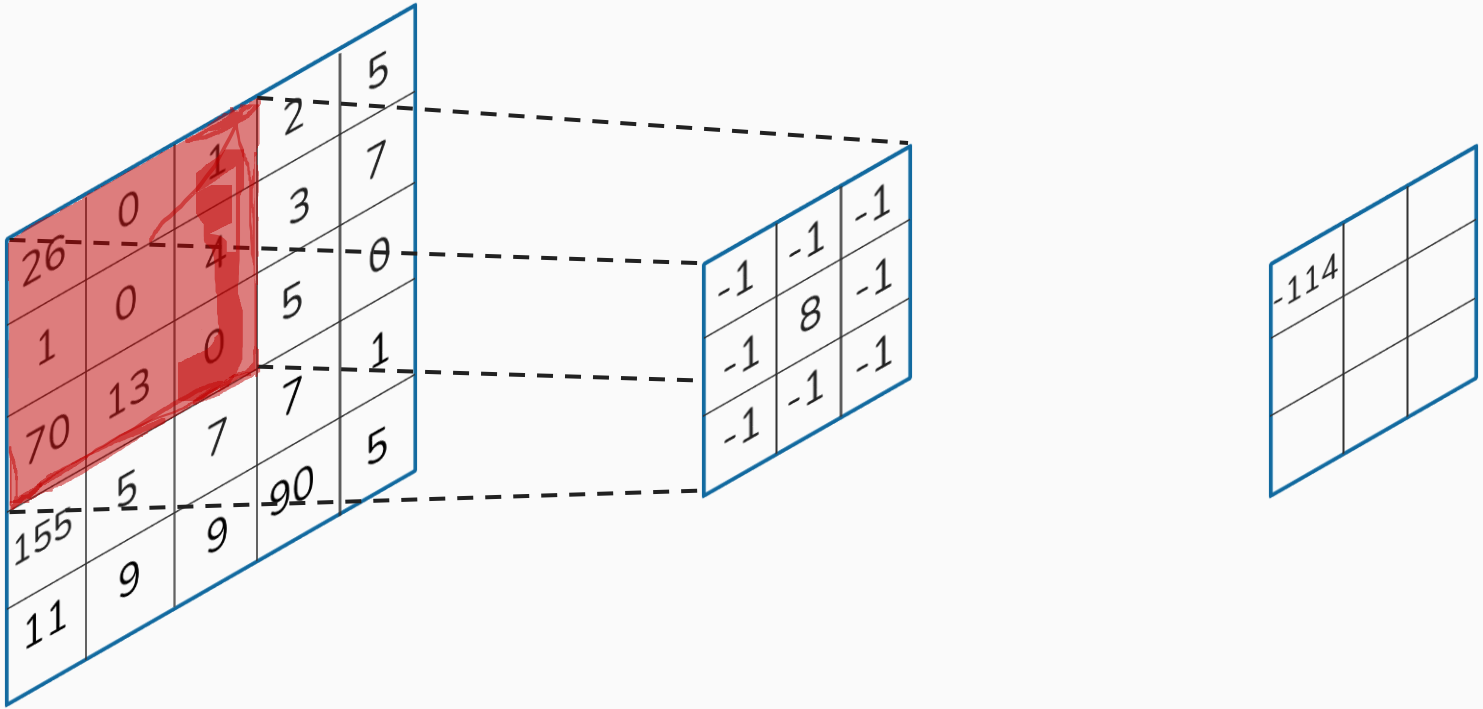

$$26 * (-1) + 0 * (-1) + 1 * (-1) + 1 * 0 + 4 * (-1) + 70 * -1 + 13 * (-1) + 0 * (-1) = -114$$

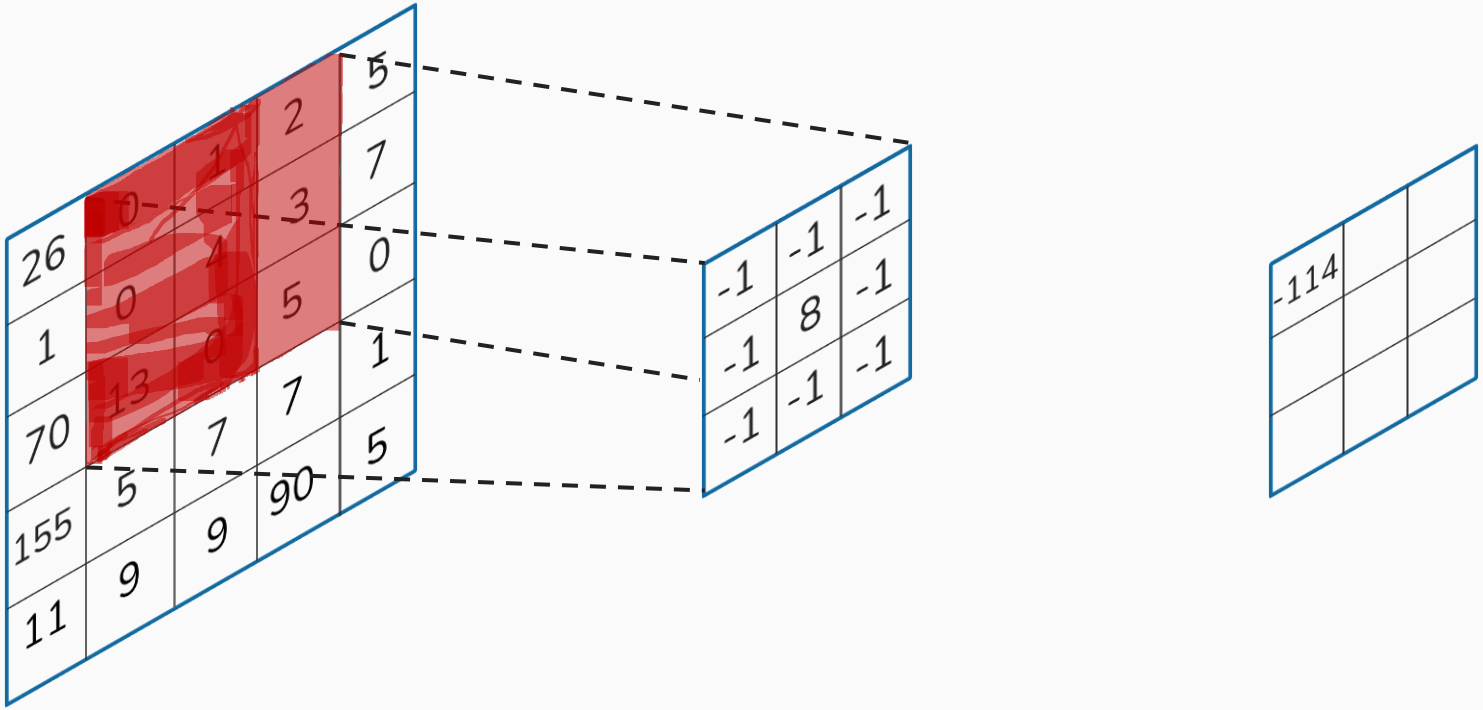
26 0 1 2 5
1 0 4 3 7
70 13 0 5 0
155 5 7 7 1
11 9 9 90 5
-1 -1 -1
-1 8 -1
-1 -1 -1
-114

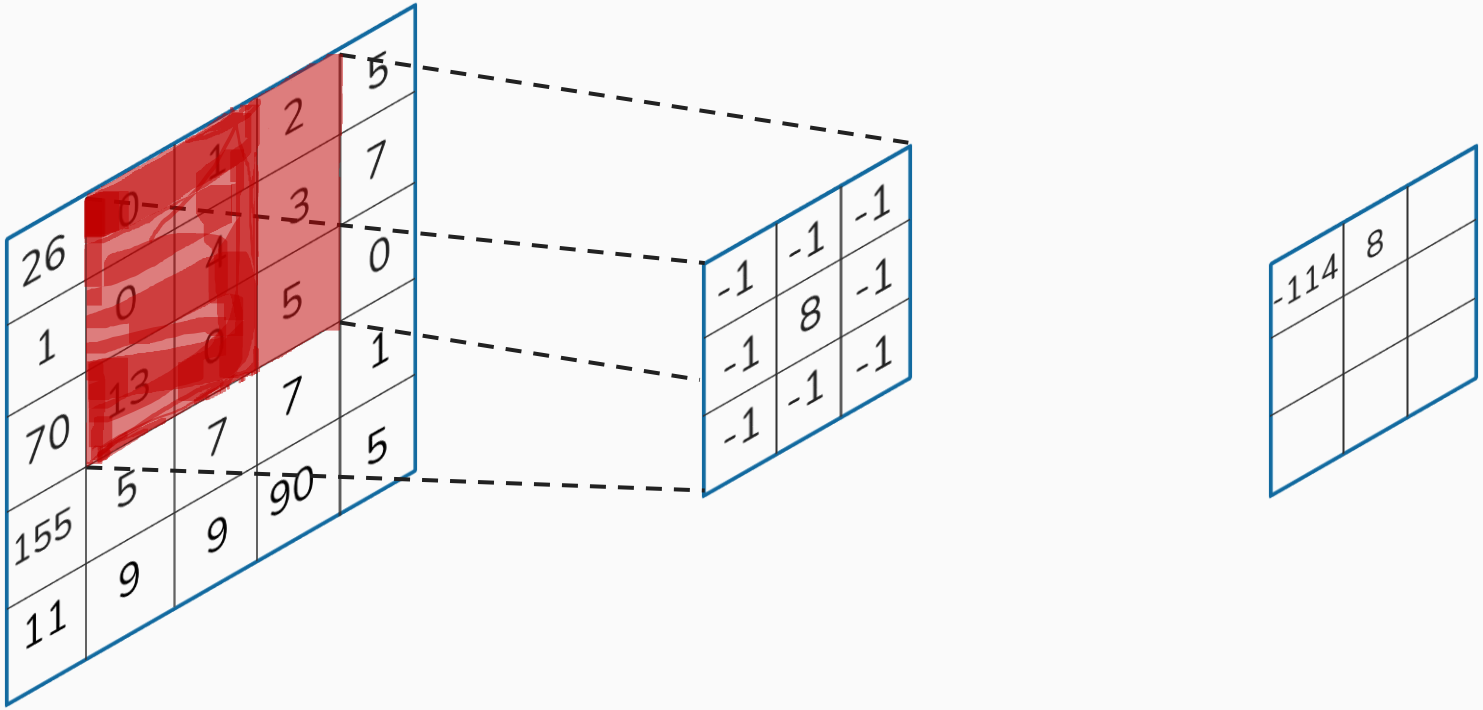
26 0 1 2 5
1 0 4 3 7
70 13 0 5 0
155 5 7 7 1
11 9 9 90 5
-1 -1 -1
-1 8 -1
-1 -1 -1
-114 8

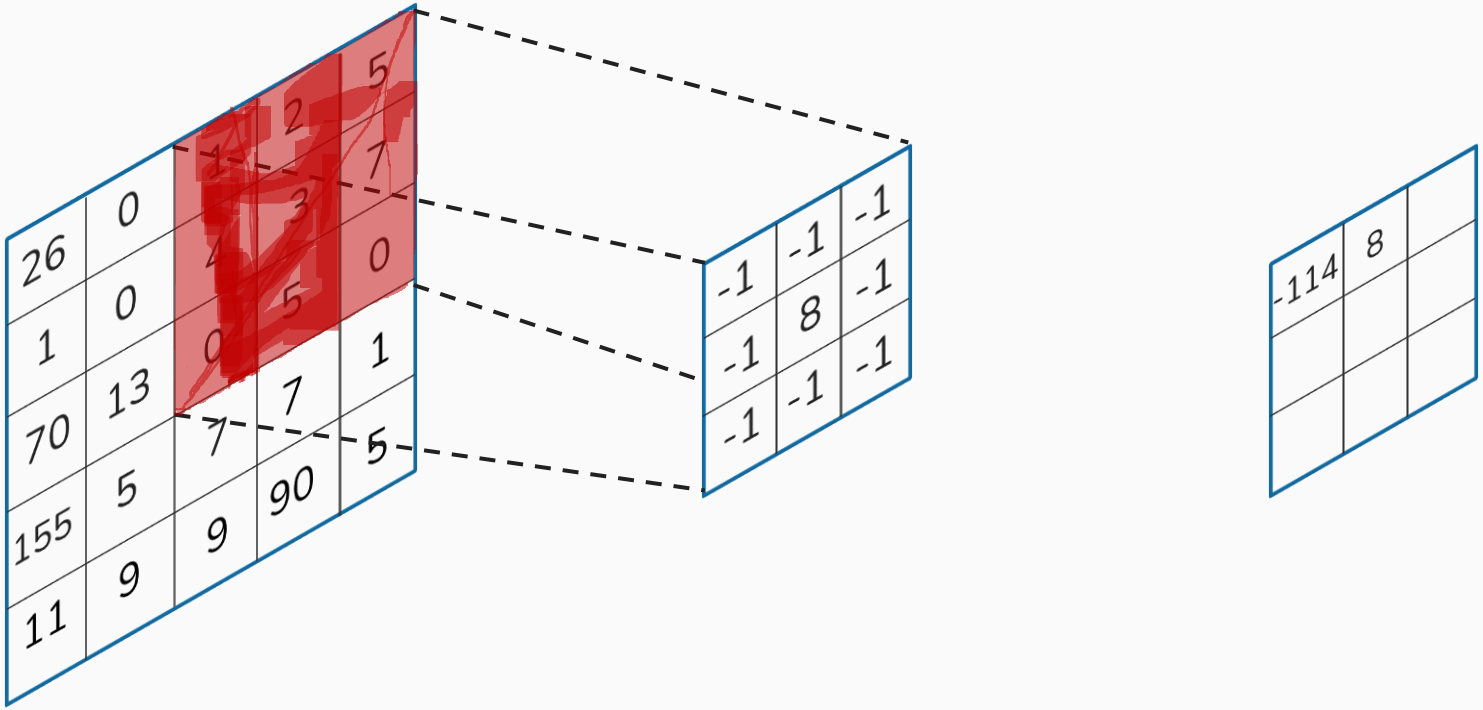
26 0 1 2 5
1 0 4 3 7
70 13 0 5 0
155 5 7 7 1
11 9 9 90 5
-1 -1 -1
-1 8 -1
-1 -1 -1
-114 8

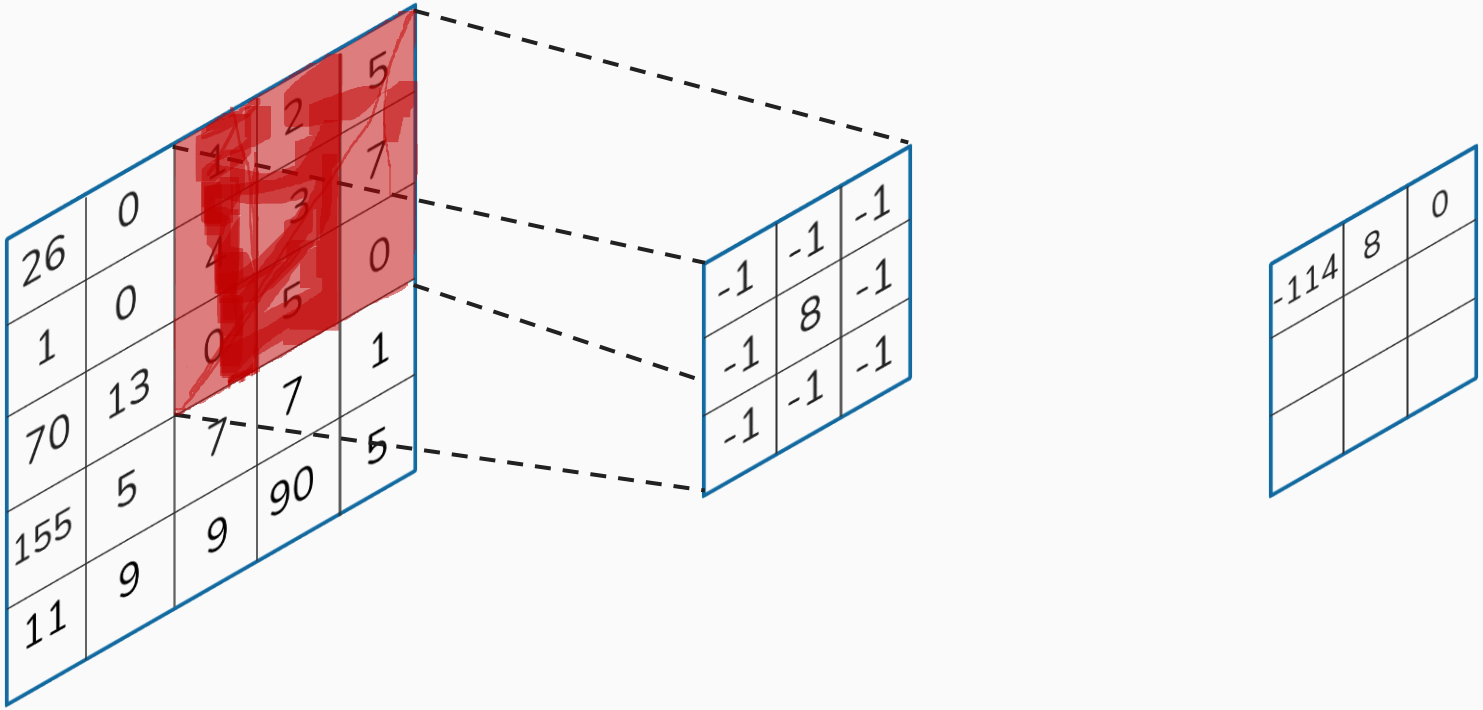
26 0 1 2 5
1 0 4 3 7
70 13 0 5 0
155 5 7 7 1
11 9 9 90 5
-1 -1 -1
-1 8 -1
-1 -1 -1
-114 8 0

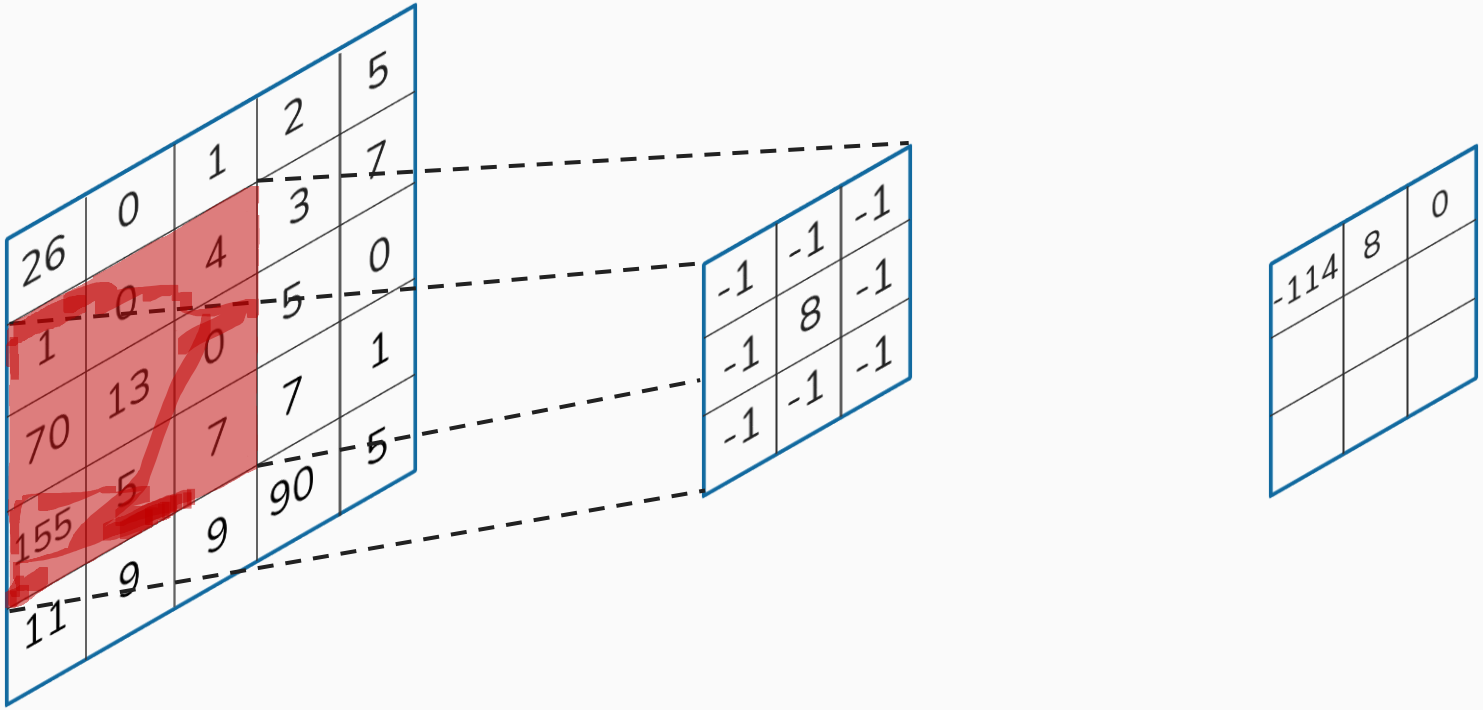
26 0 1 2 5
1 0 4 3 7
70 13 0 5 0
155 5 7 7 1
11 9 9 90 5
-1 -1 -1
-1 8 -1
-1 -1 -1
-114 8 0

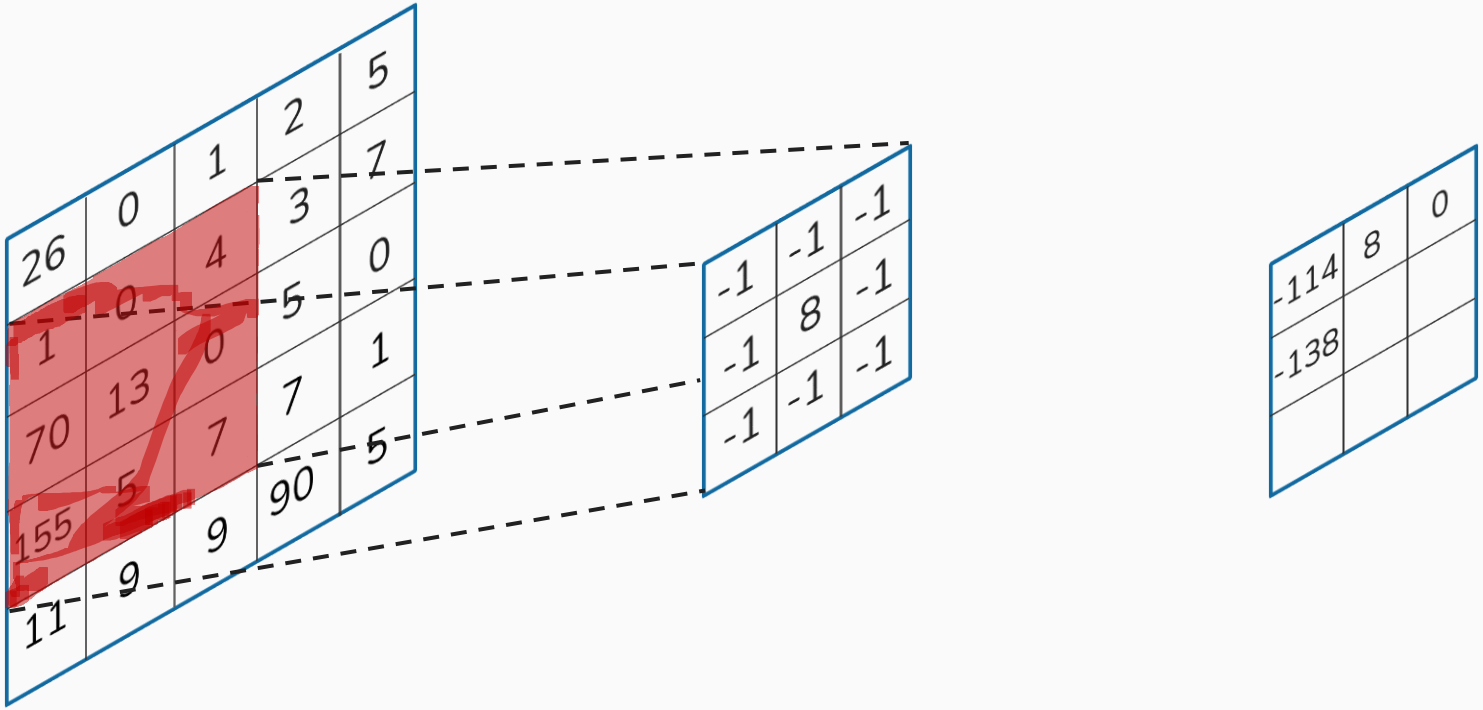
26 0 1 2 5
1 0 4 3 7
70 13 0 5 0
155 5 7 7 1
11 9 9 90 5
-1 -1 -1
-1 8 -1
-1 -1 -1
-114 8 0
-138

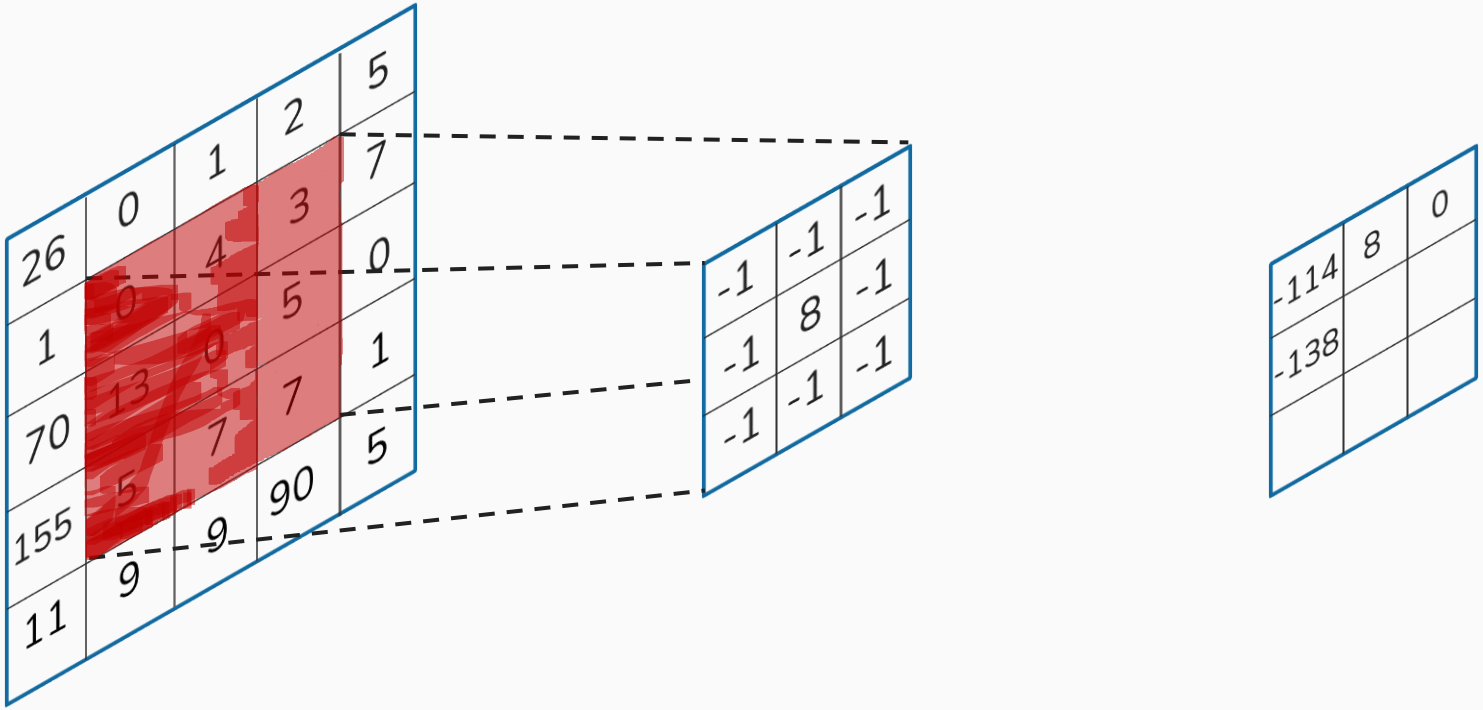
26 0 1 2 5
1 0 4 3 7
70 13 0 5 0
155 5 7 7 1
11 9 9 90 5
-1 -1 -1
-1 8 -1
-1 -1 -1
-114 8 0
-138

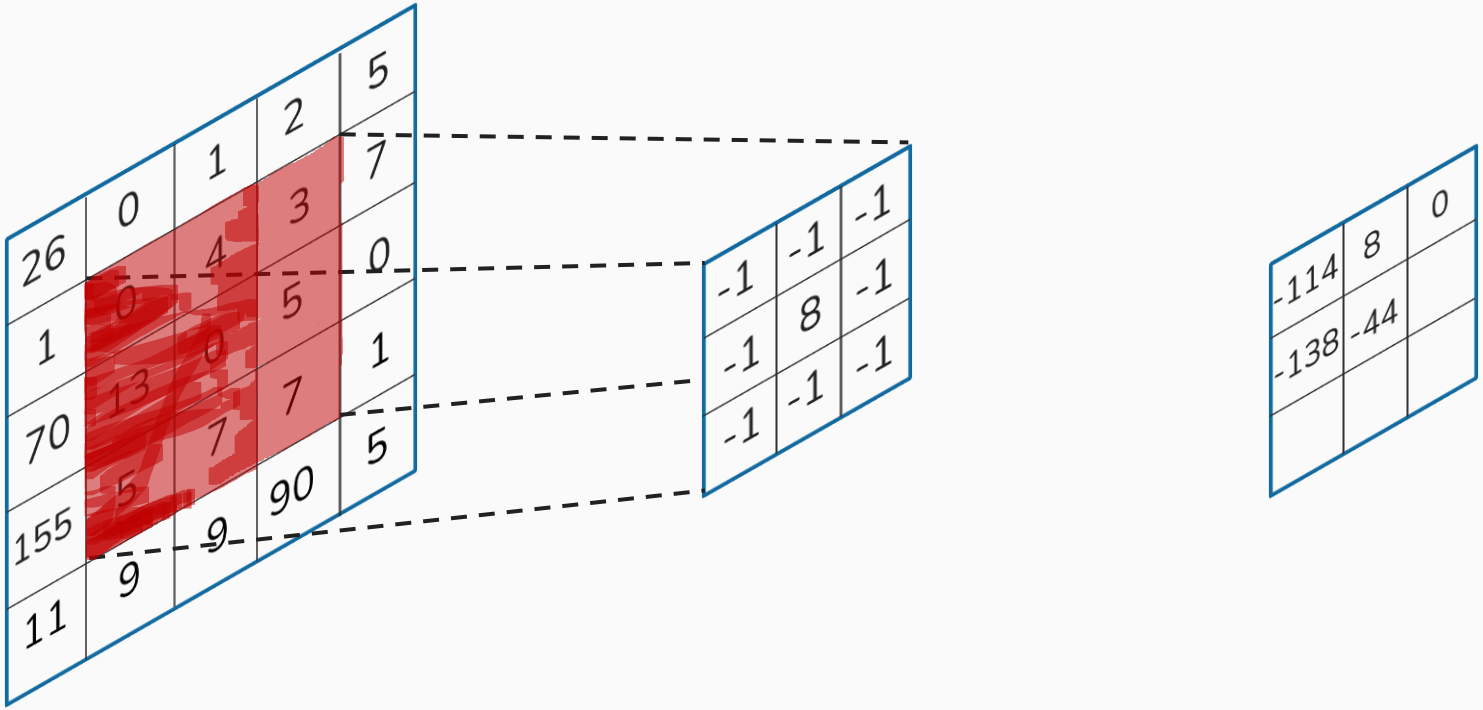
26 0 1 2 5
1 0 4 3 7
70 13 0 5 0
155 5 7 7 1
11 9 9 90 5
-1 -1 -1
-1 8 -1
-1 -1 -1
-114 8 0
-138 -44

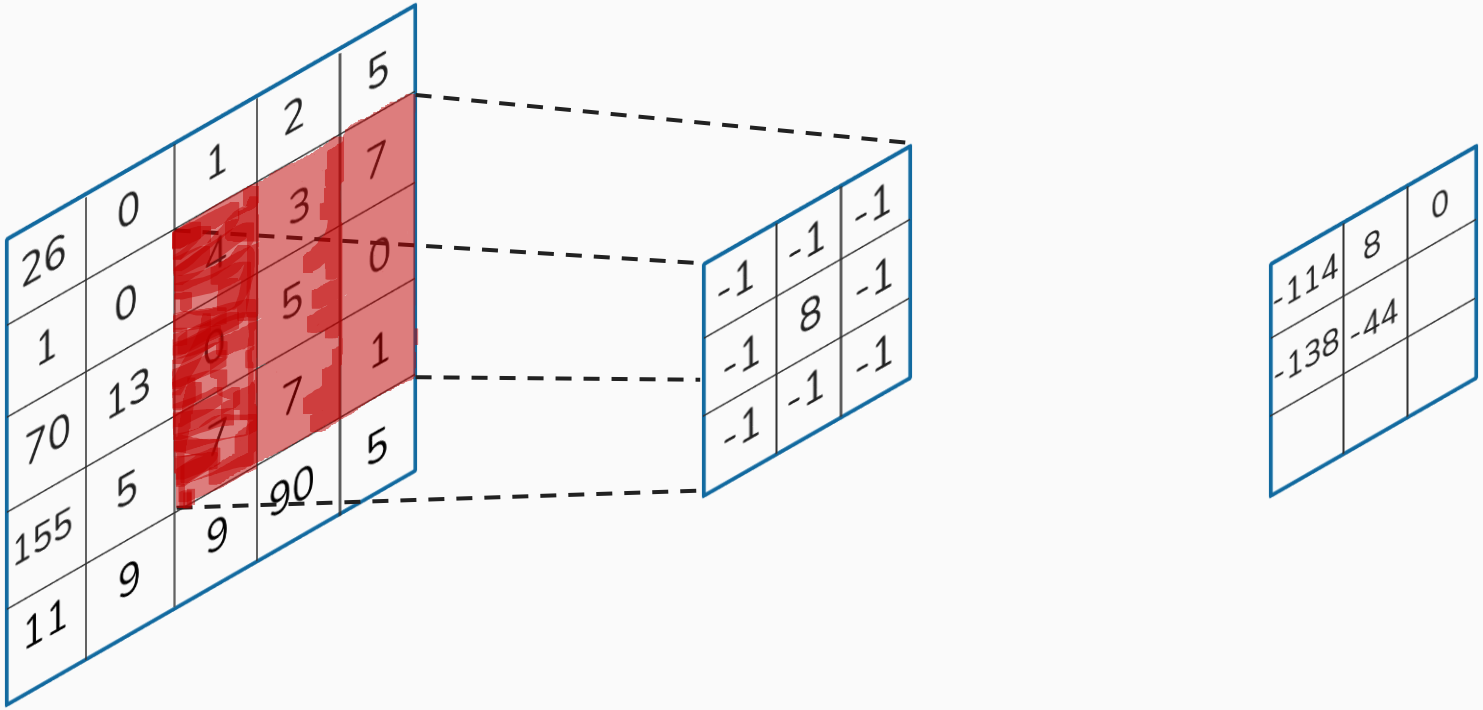
26 0 1 2 5
1 0 4 3 7
70 13 0 5 0
155 5 7 7 1
11 9 9 90 5
-1 -1 -1
-1 8 -1
-1 -1 -1
-114 8 0
-138 -44

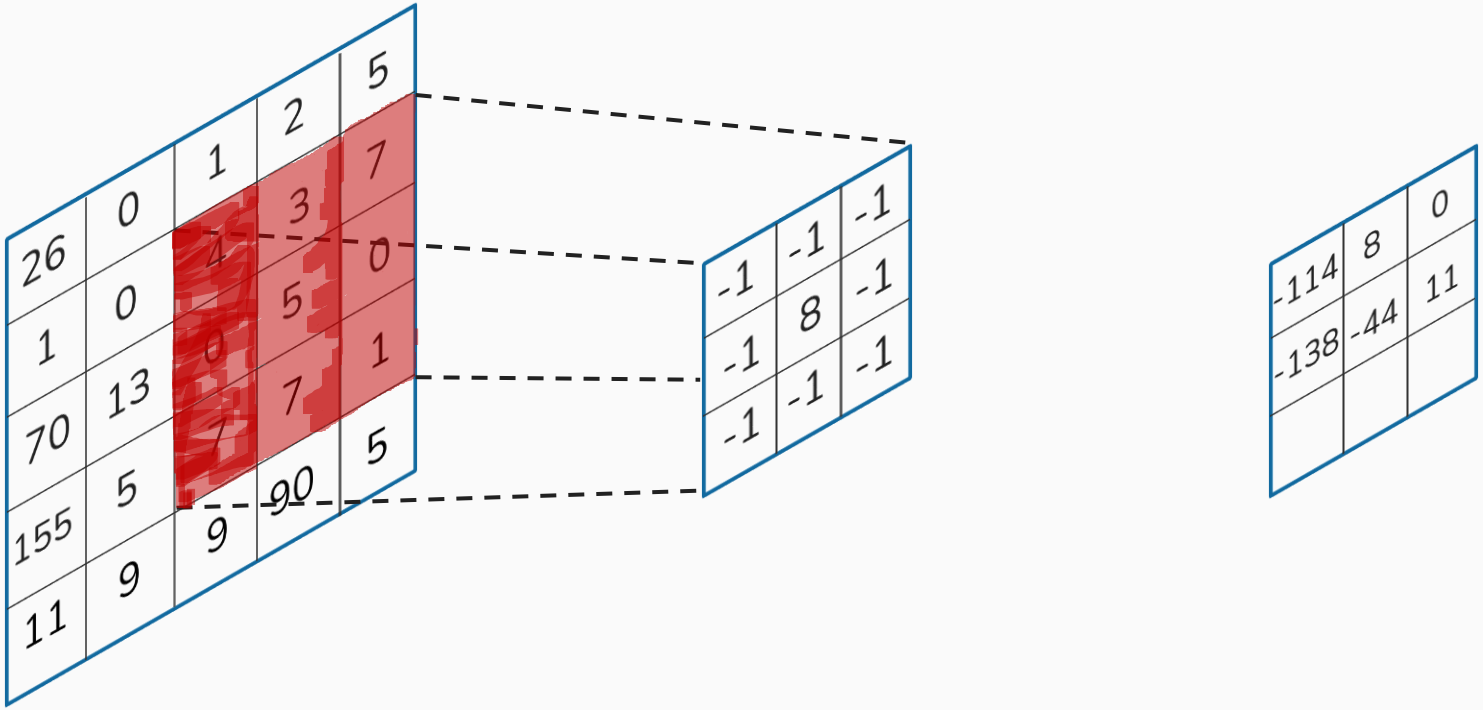
26 0 1 2 5
1 0 4 3 7
70 13 0 5 0
155 5 7 7 1
11 9 9 90 5
-1 -1 -1
-1 8 -1
-1 -1 -1
-114 8 0
-138 -44 11

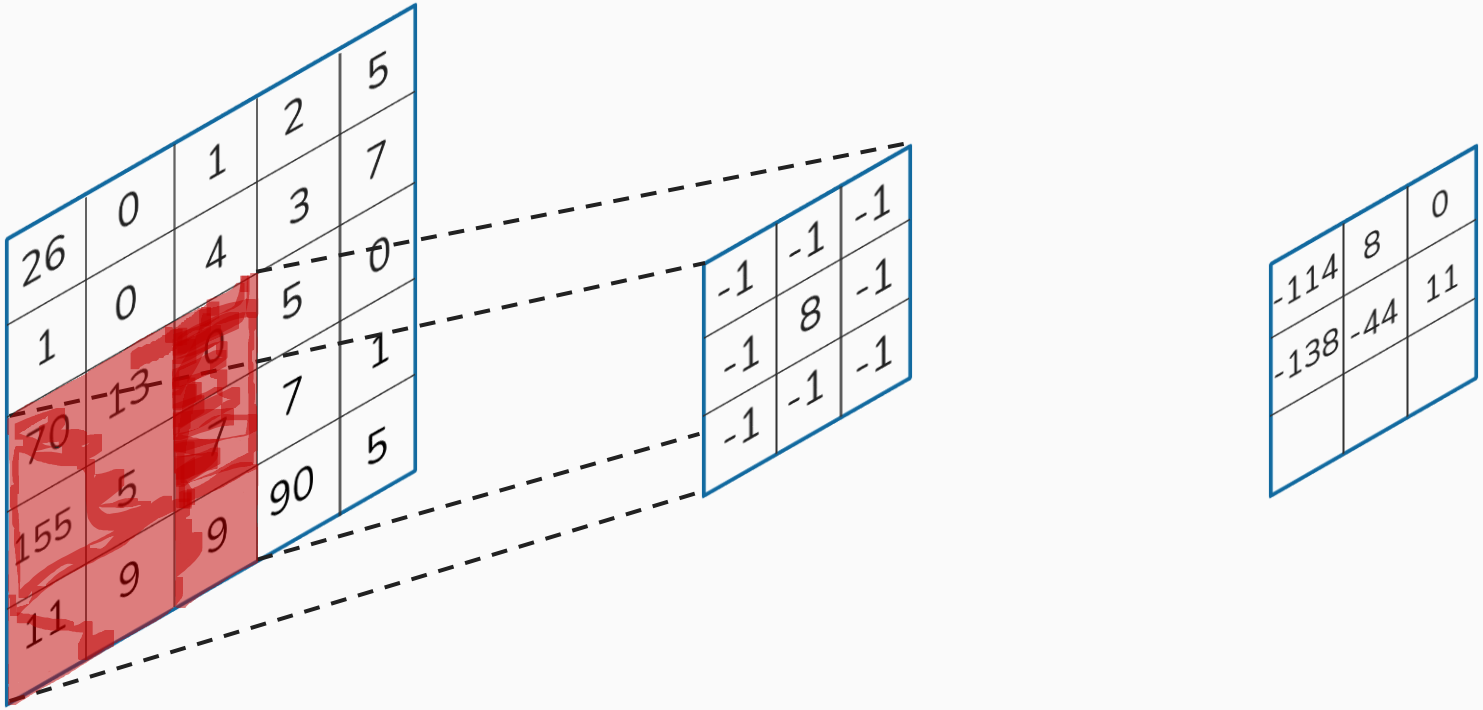
26 0 1 2 5
1 0 4 3 7
70 13 0 5 0
155 5 7 7 1
11 9 9 90 5
-1 -1 -1
-1 8 -1
-1 -1 -1
-114 8 0
-138 -44 11

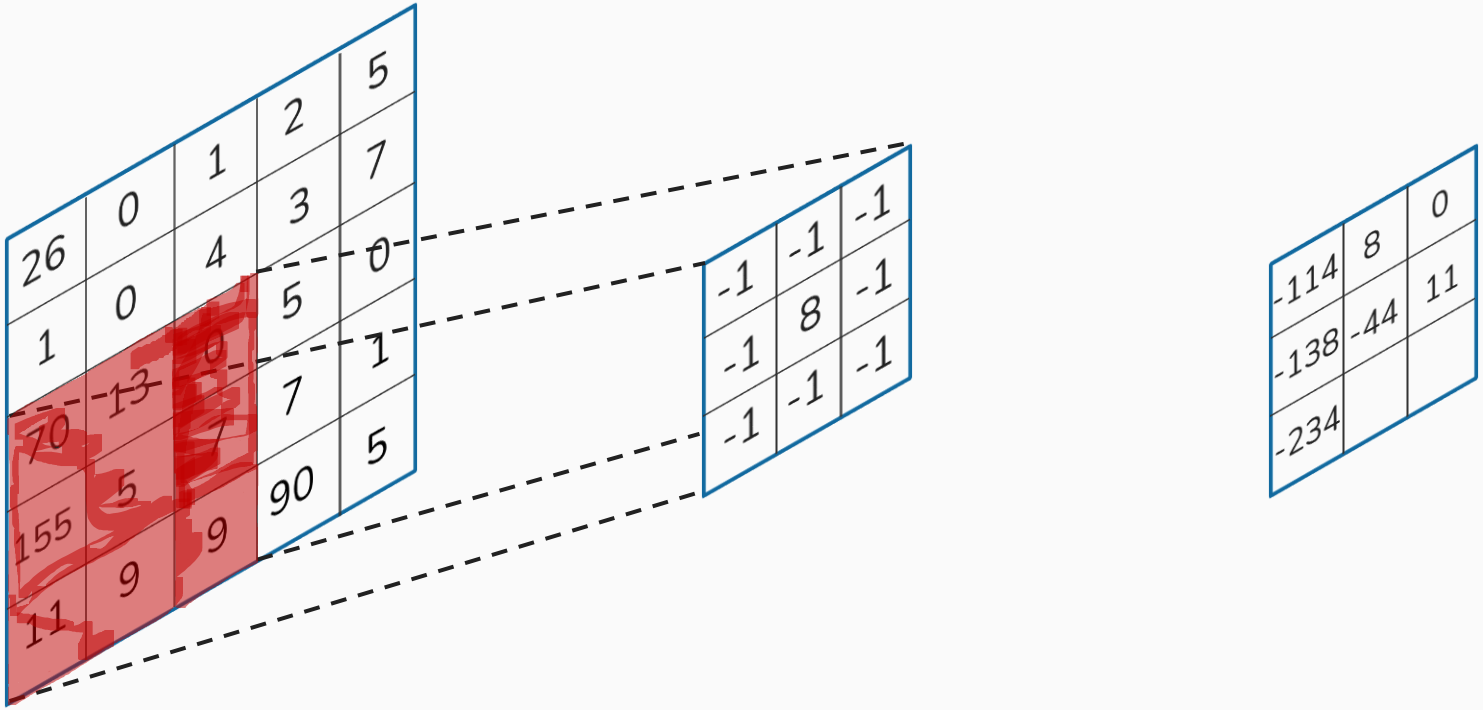
26 0 1 2 5
1 0 4 3 7
70 13 0 5 0
155 5 7 7 1
11 9 9 90 5
-1 -1 -1
-1 8 -1
-1 -1 -1
-114 8 0
-138 -44 11
-234

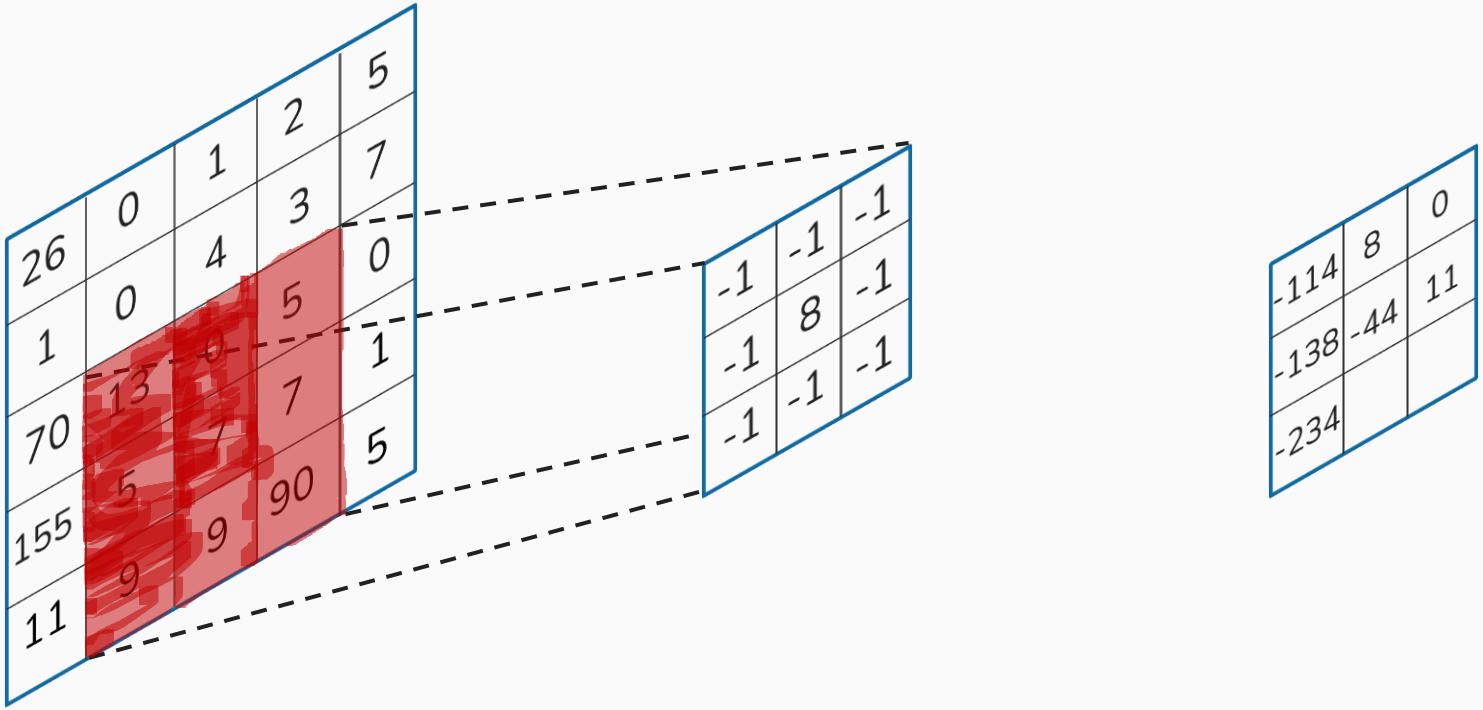
26 0 1 2 5
1 0 4 3 7
70 13 0 5 0
155 5 7 7 1
11 9 9 90 5
-1 -1 -1
-1 8 -1
-1 -1 -1
-114 8 0
-138 -44 11
-234

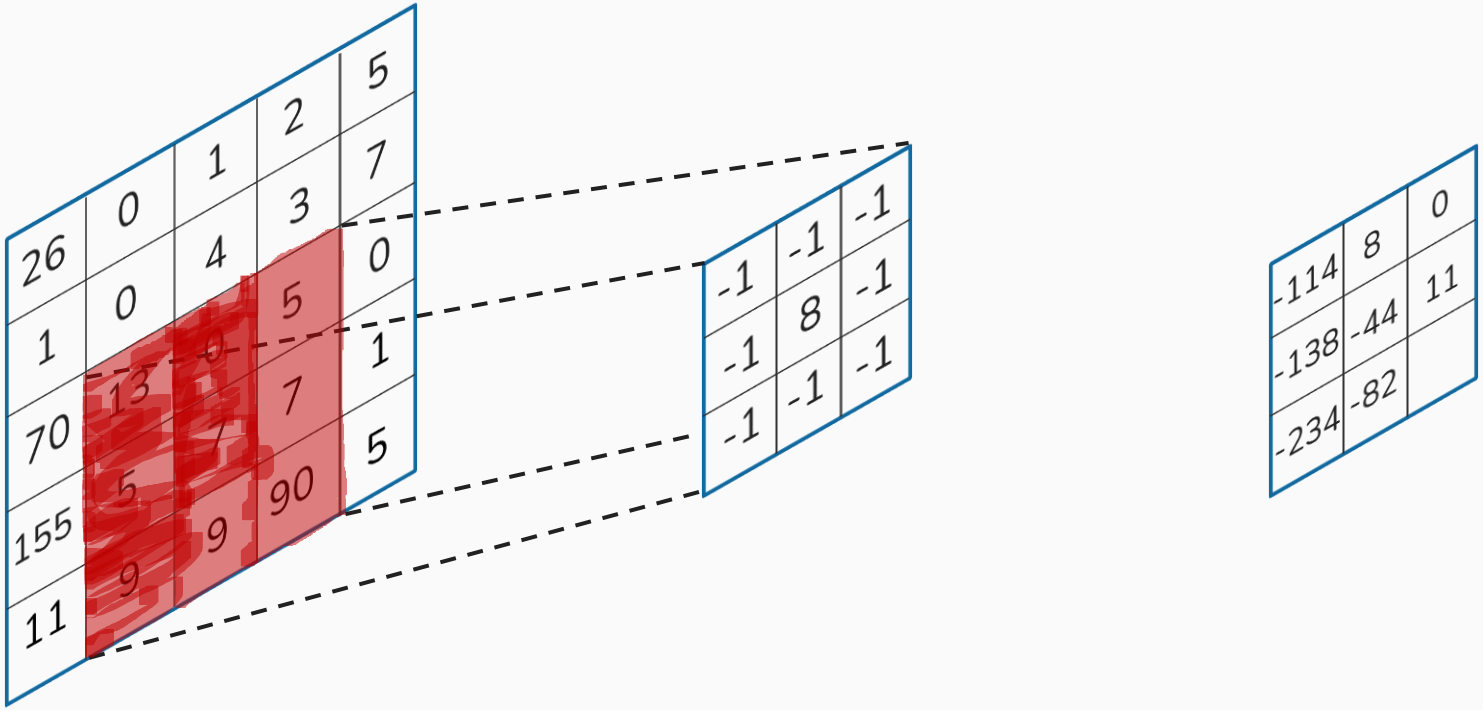
26 0 1 2 5
1 0 4 3 7
70 13 0 5 0
155 5 7 7 1
11 9 9 90 5
-1 -1 -1
-1 8 -1
-1 -1 -1
-114 8 0
-138 -44 11
-234 -82

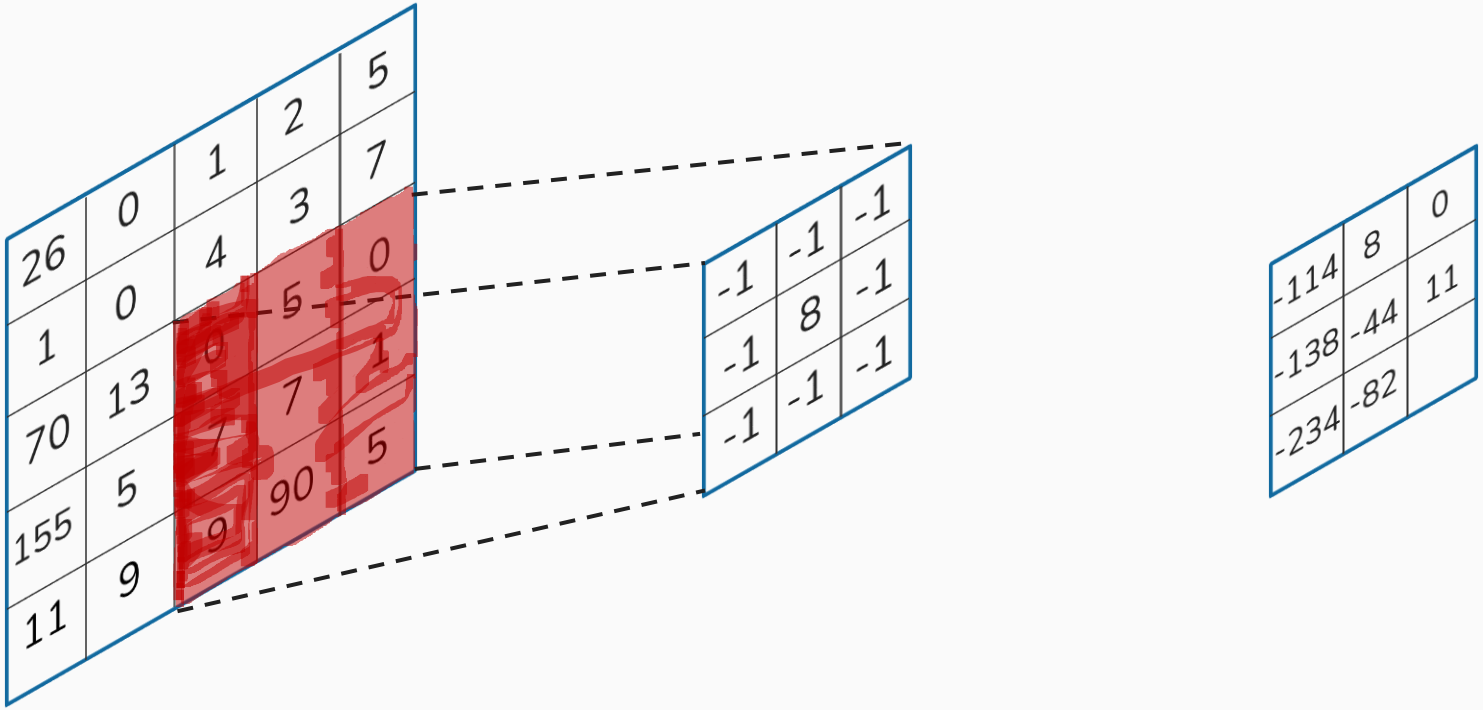
26 0 1 2 5
1 0 4 3 7
70 13 0 5 0
155 5 7 7 1
11 9 9 90 5
-1 -1 -1
-1 8 -1
-1 -1 -1
-114 8 0
-138 -44 11
-234 -82

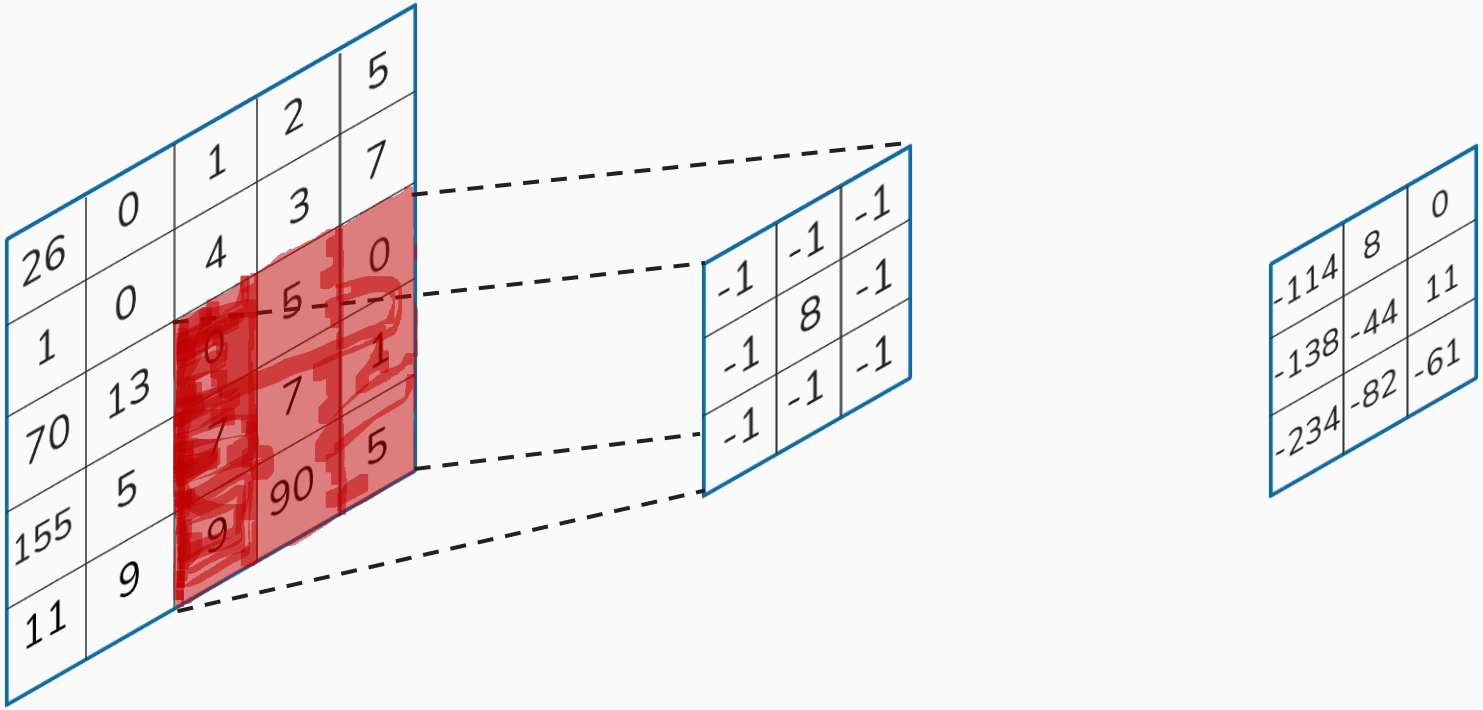
26 0 1 2 5
1 0 4 3 7
70 13 0 5 0
155 5 7 7 1
11 9 9 90 5
-1 -1 -1
-1 8 -1
-1 -1 -1
-114 8 0
-138 -44 11
-234 -82 -61

26	0	1	2	5
1	0	4	3	7
70	13	0	5	0
155	5	7	7	1
11	9	9	90	5

*

-1	-1	-1
-1	8	-1
-1	-1	-1

-114	8	0
-138	-44	11
-234	-82	-61

26	0	1	2	5
1	0	4	3	7
70	13	0	5	0
155	5	7	7	1
11	9	9	90	5

*

-1	-1	-1
-1	8	-1
-1	-1	-1

=

-114	8	0
-138	-44	11
-234	-82	-61

26	0	1	2	5
1	0	4	3	7
70	13	0	5	0
155	5	7	7	1
11	9	9	90	5

input

*

-1	-1	-1
-1	8	-1
-1	-1	-1

=

-114	8	0
-138	-44	11
-234	-82	-61

26	0	1	2	5
1	0	4	3	7
70	13	0	5	0
155	5	7	7	1
11	9	9	90	5

input

*

-1	-1	-1
-1	8	-1
-1	-1	-1

Kernel

=

-114	8	0
-138	-44	11
-234	-82	-61

26	0	1	2	5
1	0	4	3	7
70	13	0	5	0
155	5	7	7	1
11	9	9	90	5

input

*

-1	-1	-1
-1	8	-1
-1	-1	-1

Kernel

=

-114	8	0
-138	-44	11
-234	-82	-61

26	0	1	2	5
1	0	4	3	7
70	13	0	5	0
155	5	7	7	1
11	9	9	90	5

input

*

-1	-1	-1
-1	8	-1
-1	-1	-1

Kernel

=

-114	8	0
-138	-44	11
-234	-82	-61

Feature map

For RGB images

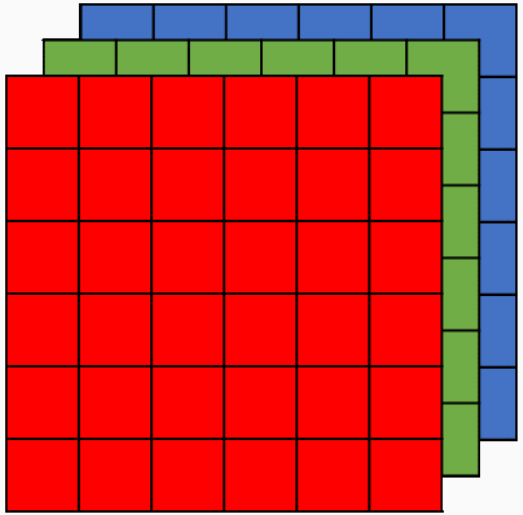

$6 \times 6 \times \boxed{3}$

*

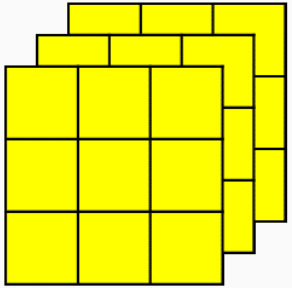

$3 \times 3 \times \boxed{3}$

=

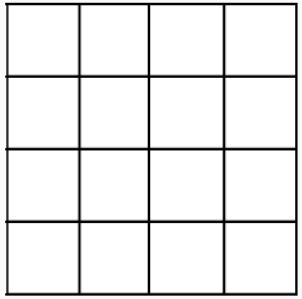

4×4

Convnets are not connected to every pixel in the input image but only the pixels in their receptive field

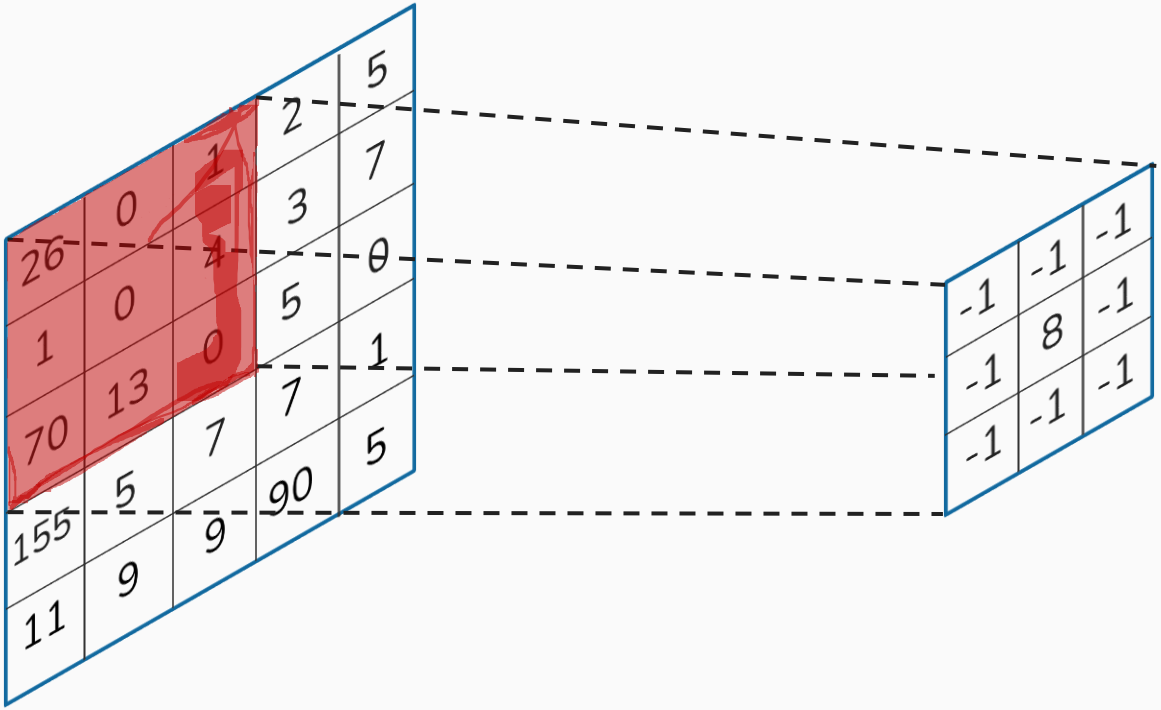
26
0
1
2
5
1
0
4
3
7
1
13
0
5
0
70
7
7
1
155
5
9
90
5
11
9
-1
-1
-1
-1
8
-1
-1
-1
-1

Convnets have shared weights an biases

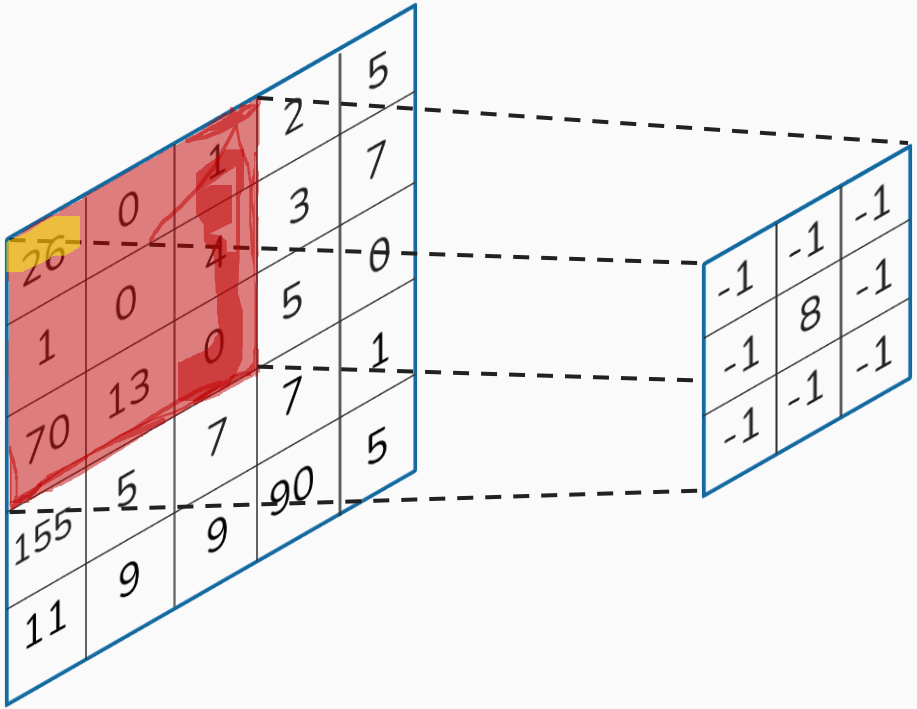
26
0
1
2
5
1
0
4
3
7
1
0
0
5
0
70
13
7
7
1
155
5
9
90
5
11
9
-1
-1
-1
-1
8
-1
-1
-1
-1

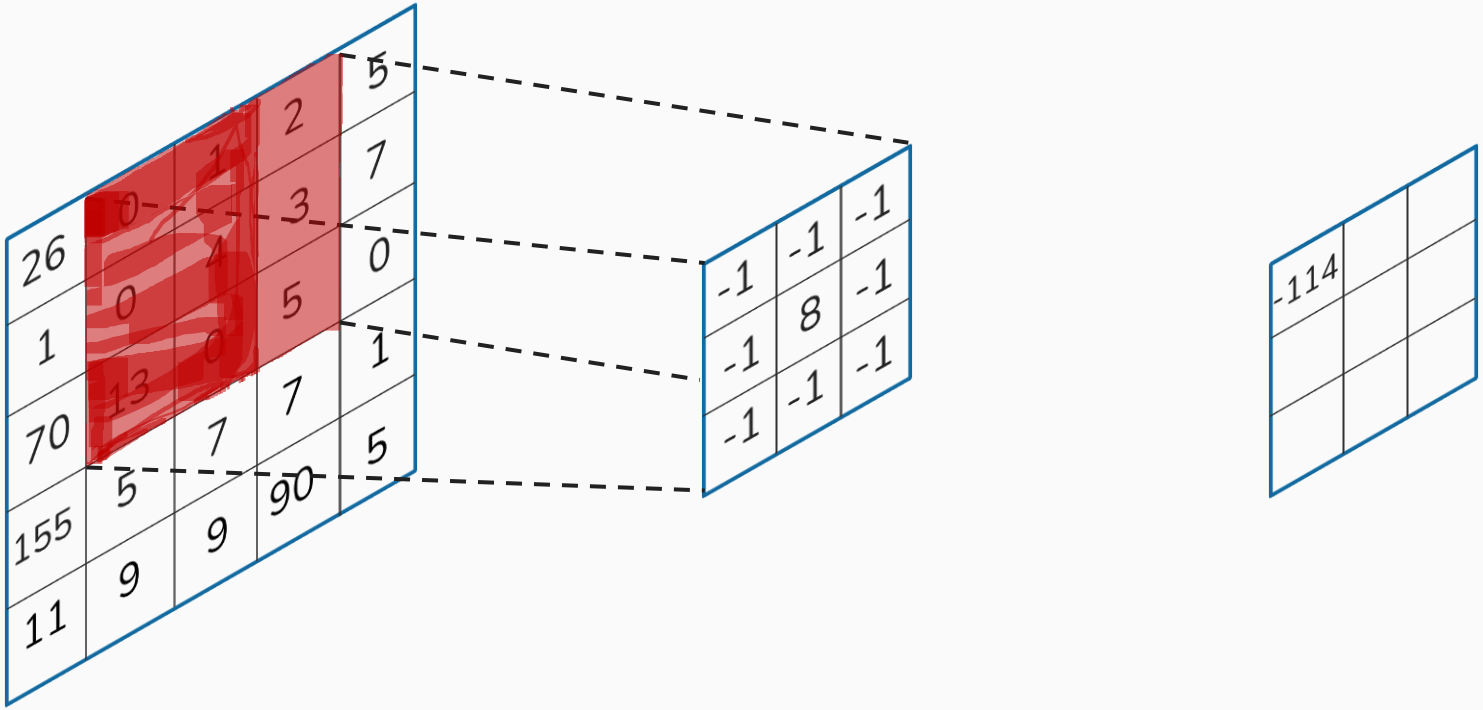
26 0 1 2 5
1 0 4 3 7
70 13 0 5 0
155 5 7 7 1
11 9 9 90 5
-1 -1 -1
-1 8 -1
-1 -1 -1
-114

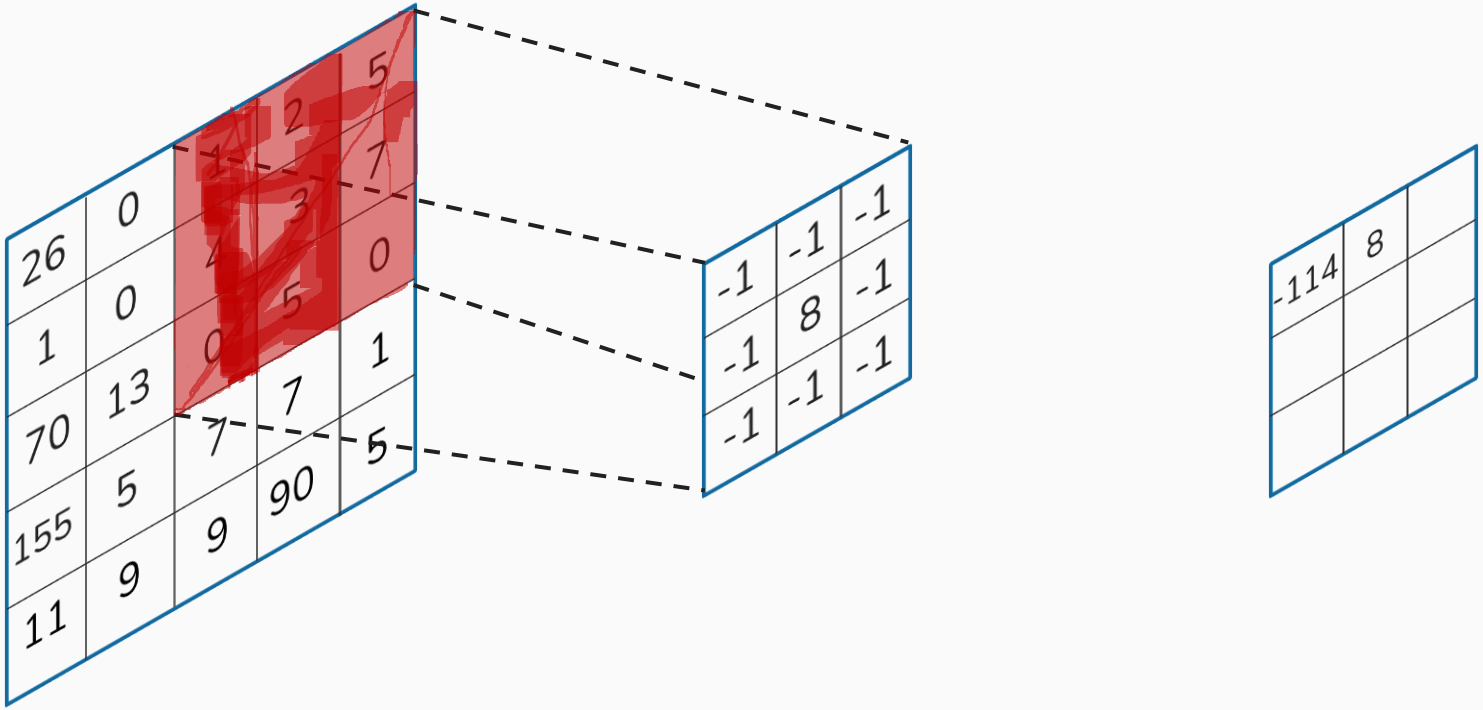
26 0 1 2 5
1 0 4 3 7
70 13 0 5 0
155 5 7 7 1
11 9 9 90 5
-1 -1 -1
-1 8 -1
-1 -1 -1
-114 8

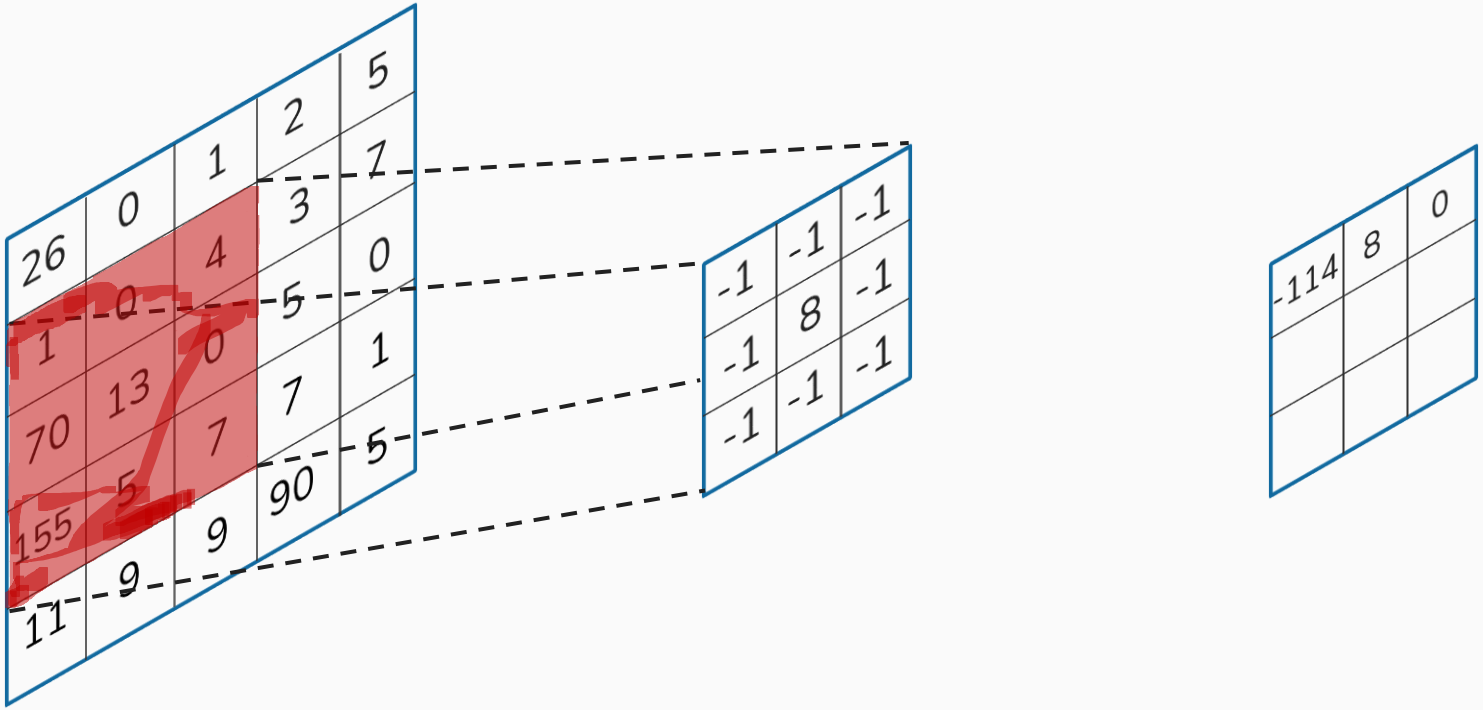
26 0 1 2 5
1 0 4 3 7
70 13 0 5 0
155 5 7 7 1
11 9 9 90 5
-1 -1 -1
-1 8 -1
-1 -1 -1
-114 8 0

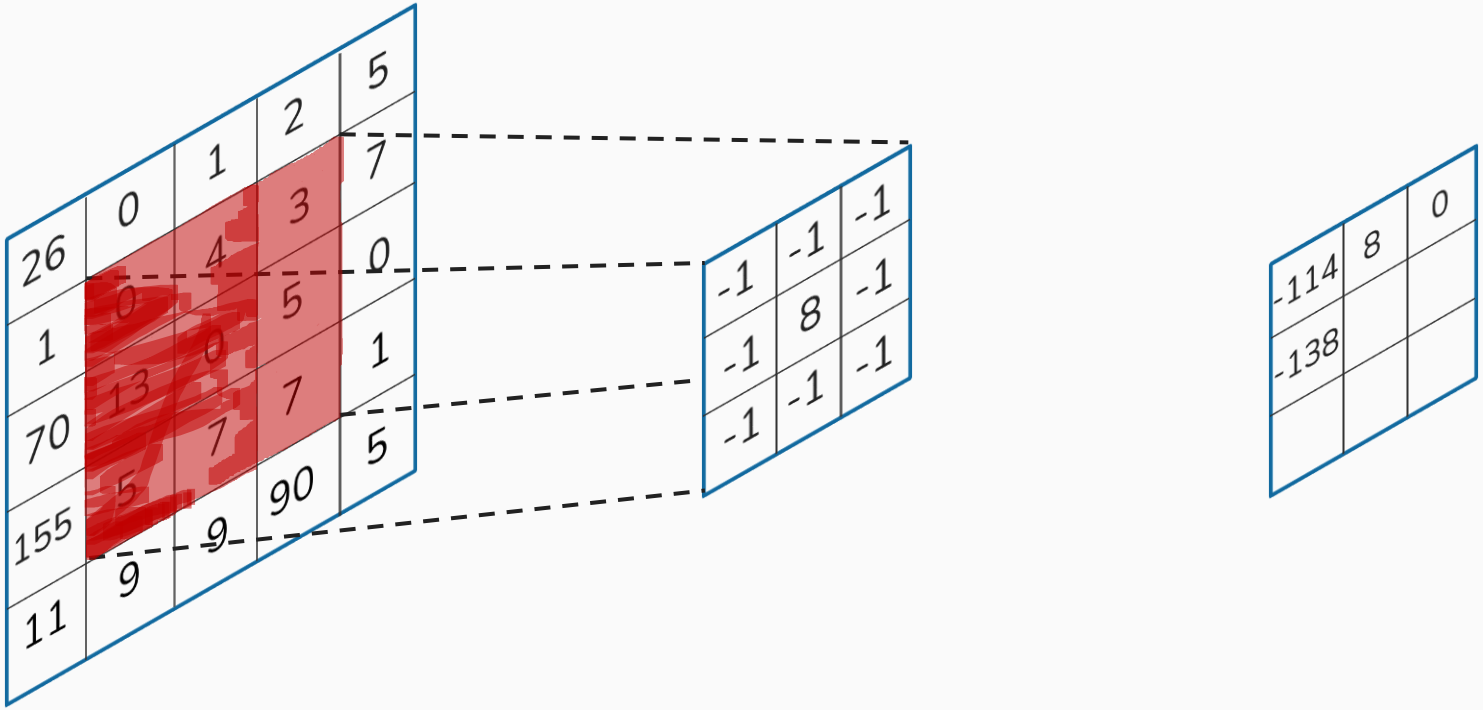
26 0 1 2 5
1 0 4 3 7
70 13 0 5 0
155 5 7 7 1
11 9 9 90 5
-1 -1 -1
-1 8 -1
-1 -1 -1
-114 8 0
-138

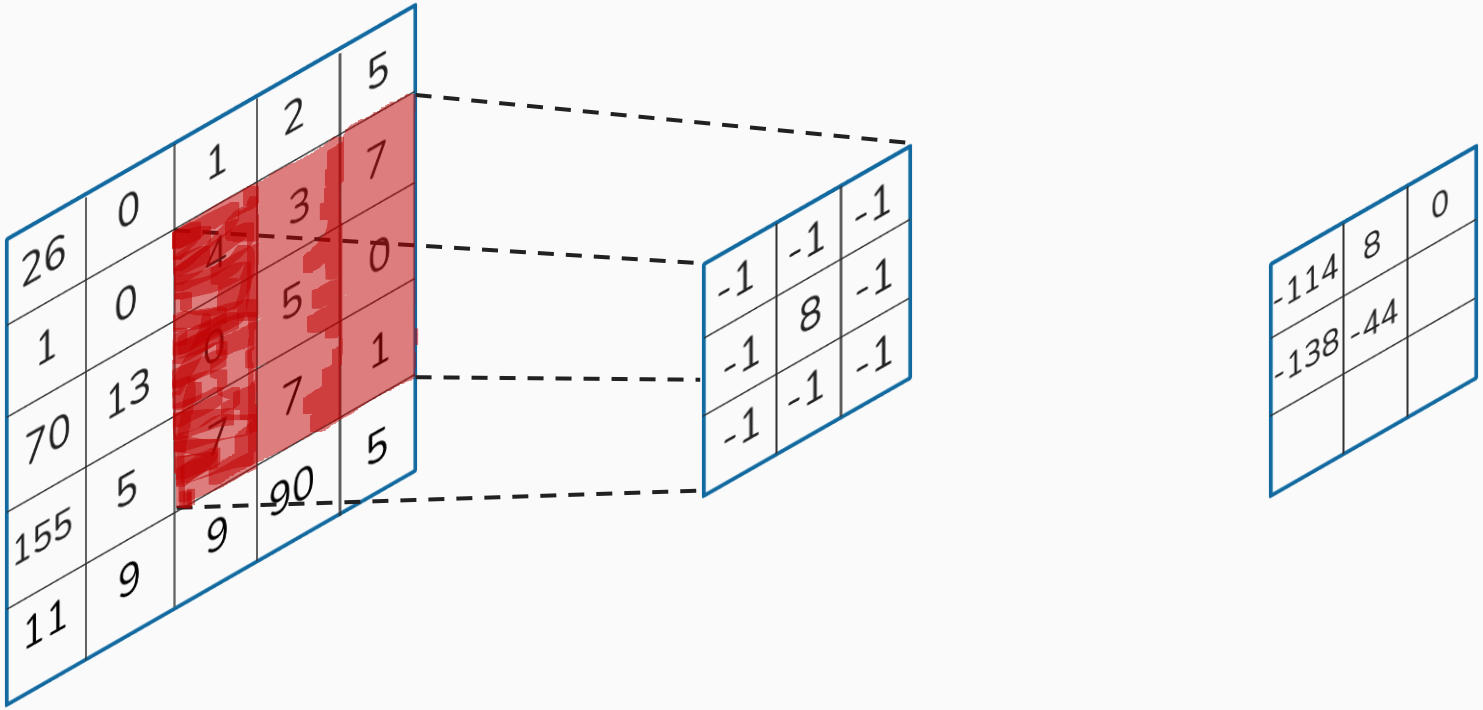
26 0 1 2 5
1 0 4 3 7
70 13 0 5 0
155 5 7 7 1
11 9 9 90 5
-1 -1 -1
-1 8 -1
-1 -1 -1
-114 8 0
-138 -44

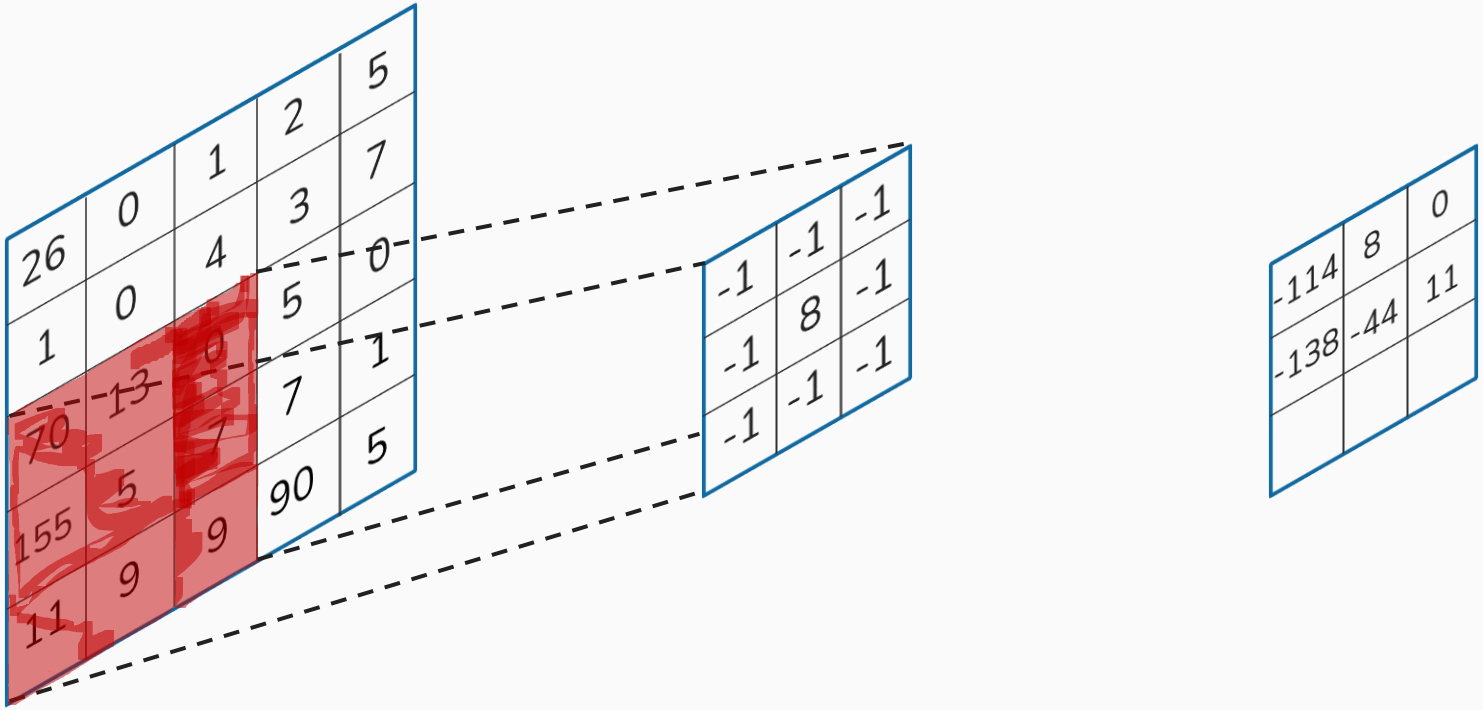
26 0 1 2 5
1 0 4 3 7
70 13 0 5 0
155 5 7 7 1
11 9 9 90 5
-1 -1 -1
-1 8 -1
-1 -1 -1
-114 8 0
-138 -44 11

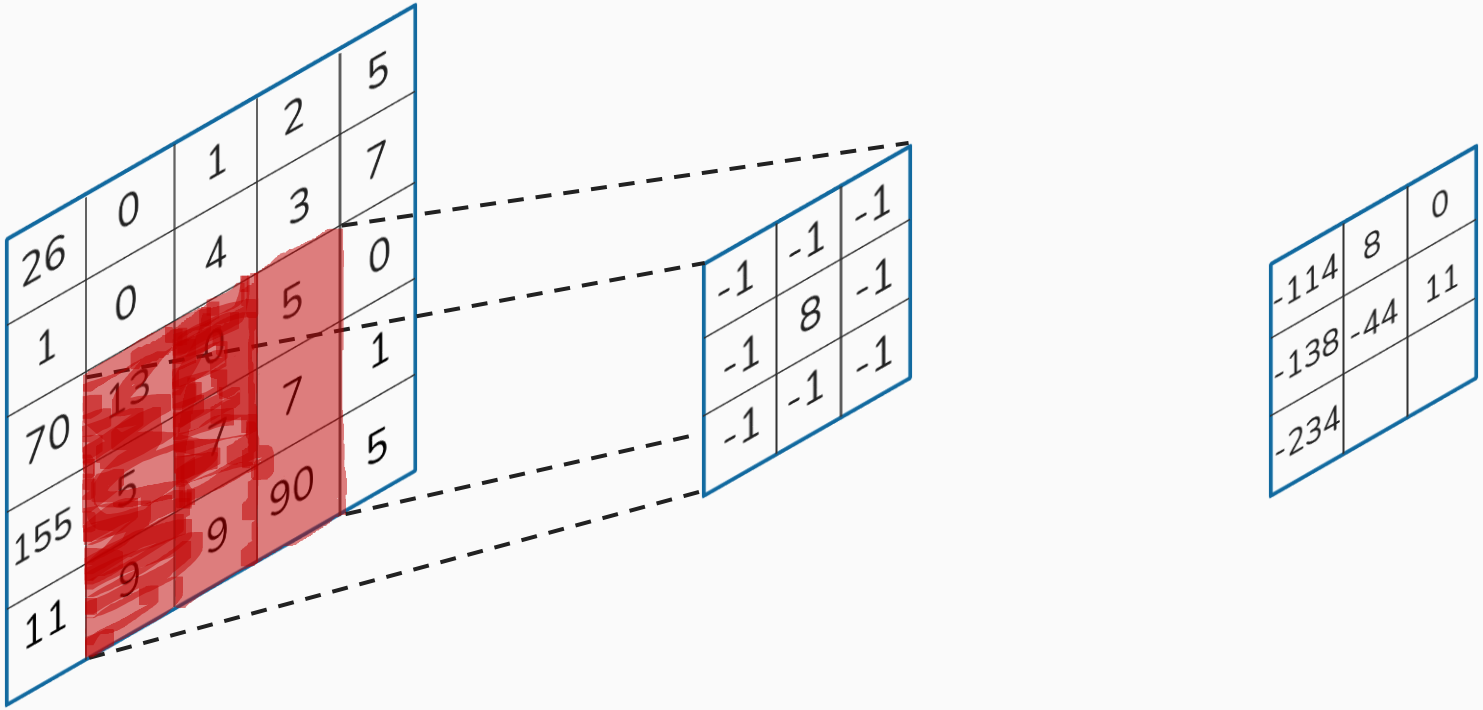
26 0 1 2 5
1 0 4 3 7
70 13 0 5 0
155 5 7 7 1
11 9 9 90 5
-1 -1 -1
-1 8 -1
-1 -1 -1
-114 8 0
-138 -44 11
-234

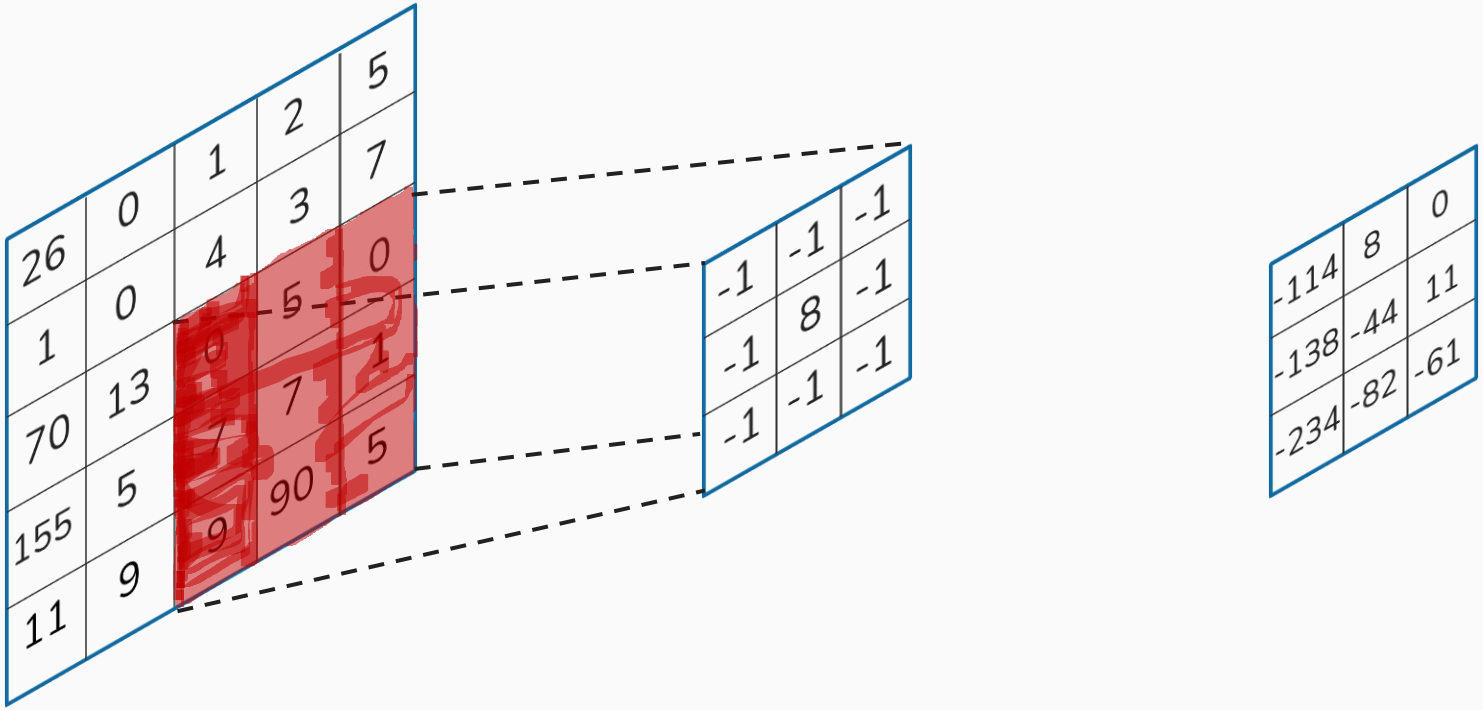
26 0 1 2 5
1 0 4 3 7
70 13 0 5 0
155 5 7 7 1
11 9 9 90 5
-1 -1 -1
-1 8 -1
-1 -1 -1
-114 8 0
-138 -44 11
-234 -82 -61

Convnets are translation invariant

image

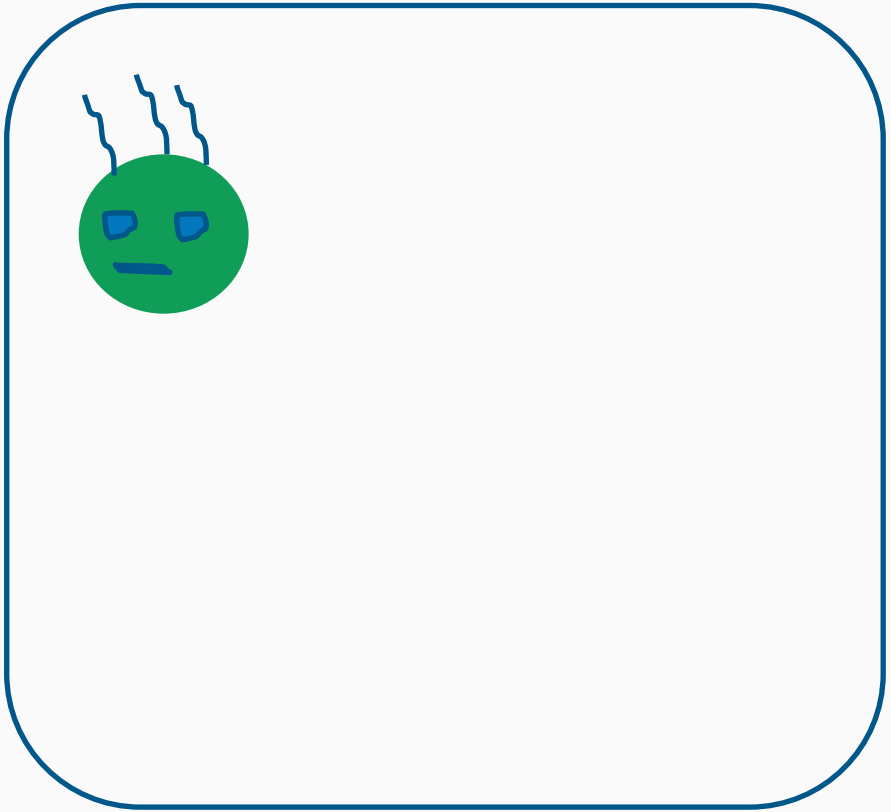

image

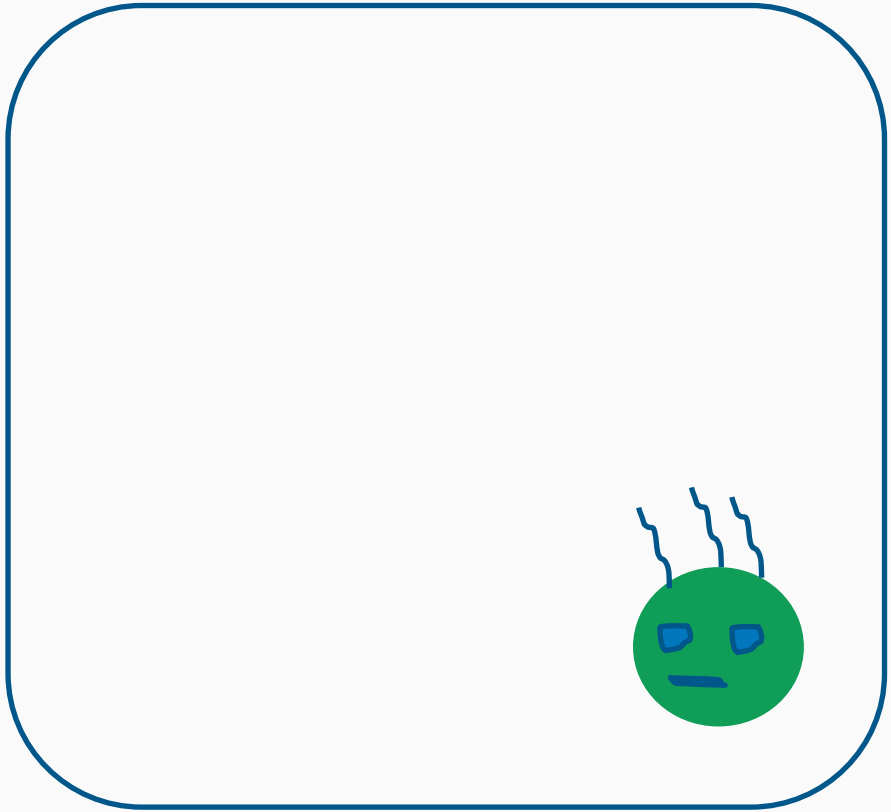

image

image

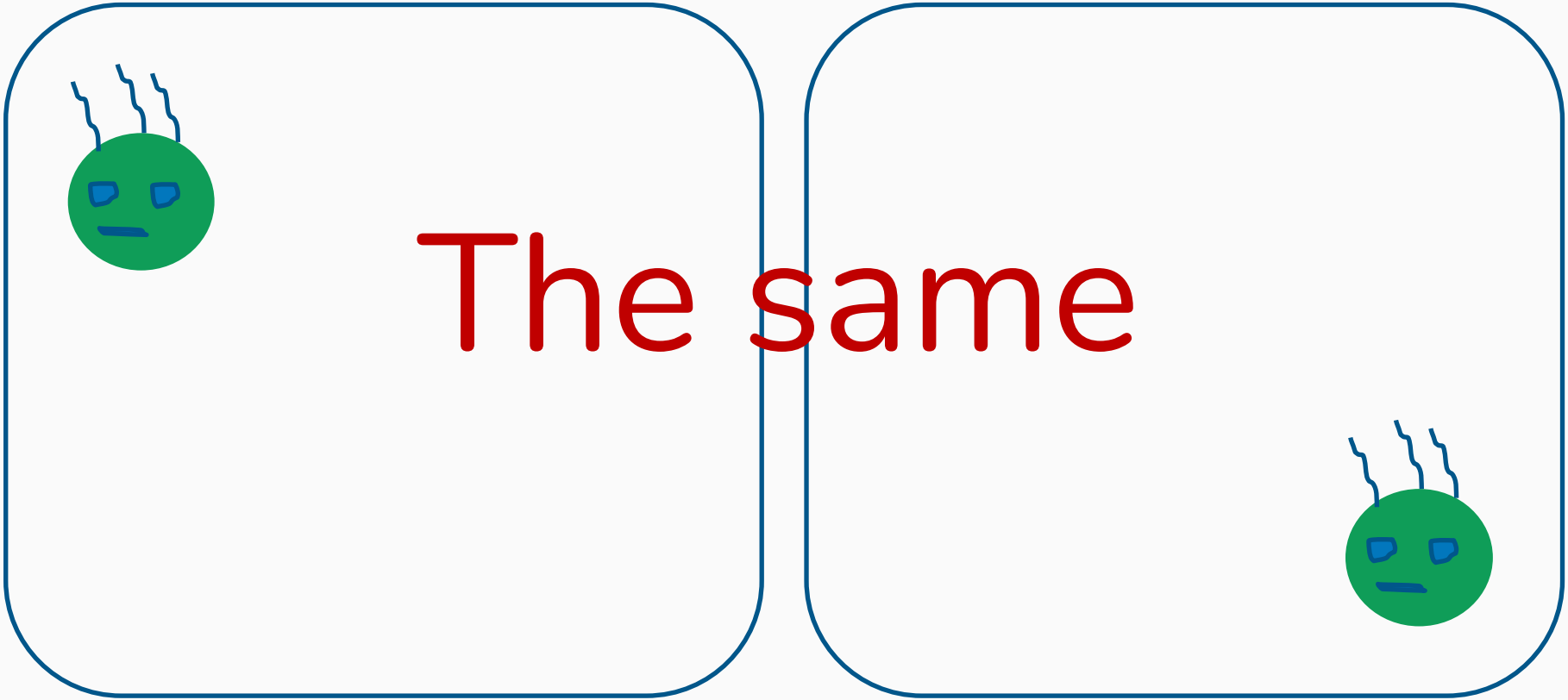

Weights ?

Filters

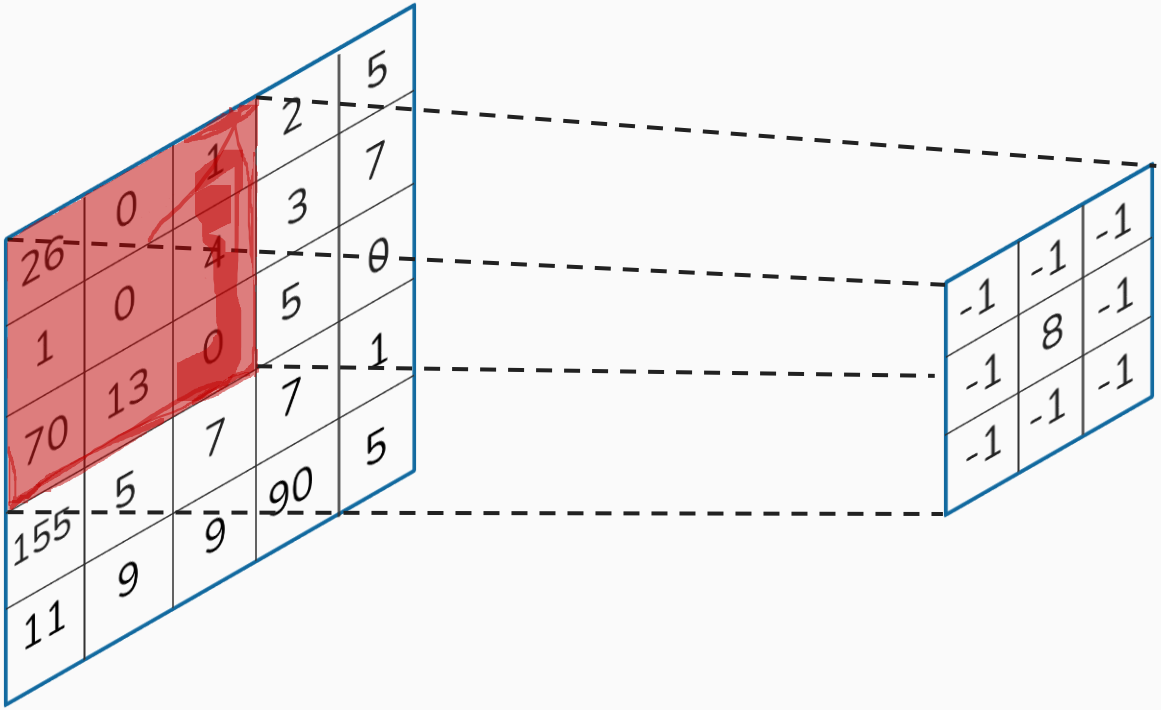
26
0
1
2
5
1
0
4
3
7
1
13
0
5
0
70
7
7
1
155
5
9
90
5
11
9
-1
-1
-1
-1
8
-1
-1
-1
-1

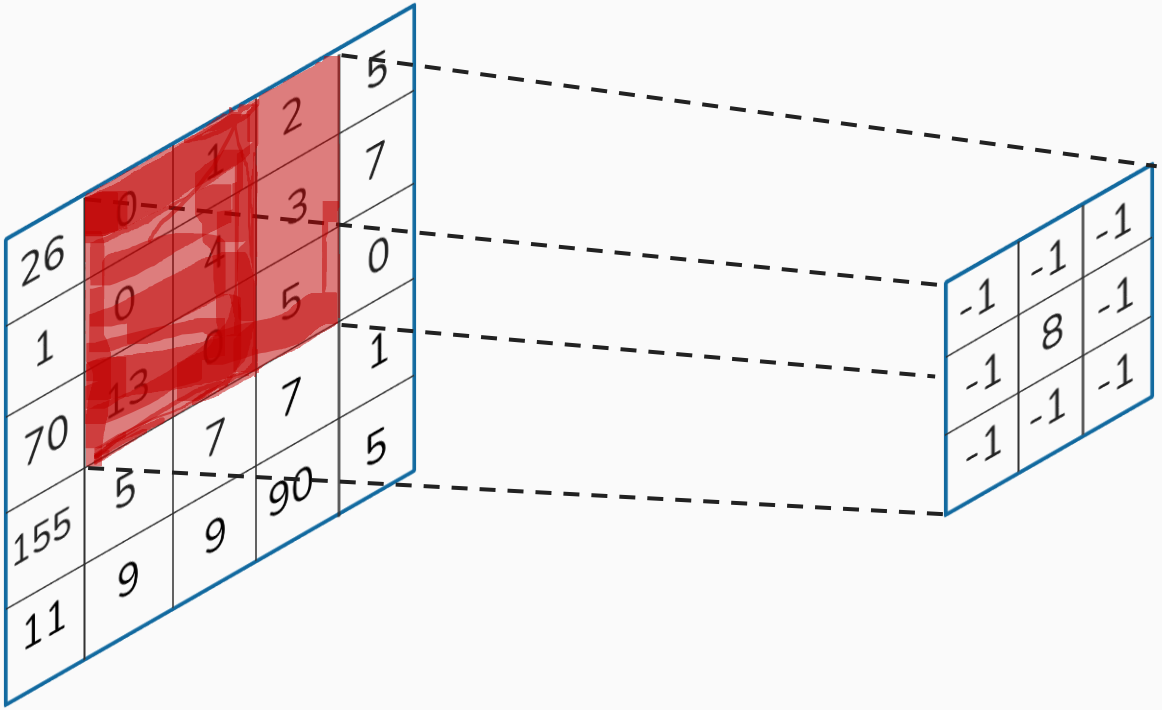
26
1
70
155
11
0
0
13
5
9
9
1
4
0
7
90
2
3
5
7
5
5
7
0
1
5
-1
-1
-1
-1
8
-1
-1
-1
-1

Stride= how much we move the filter at each step

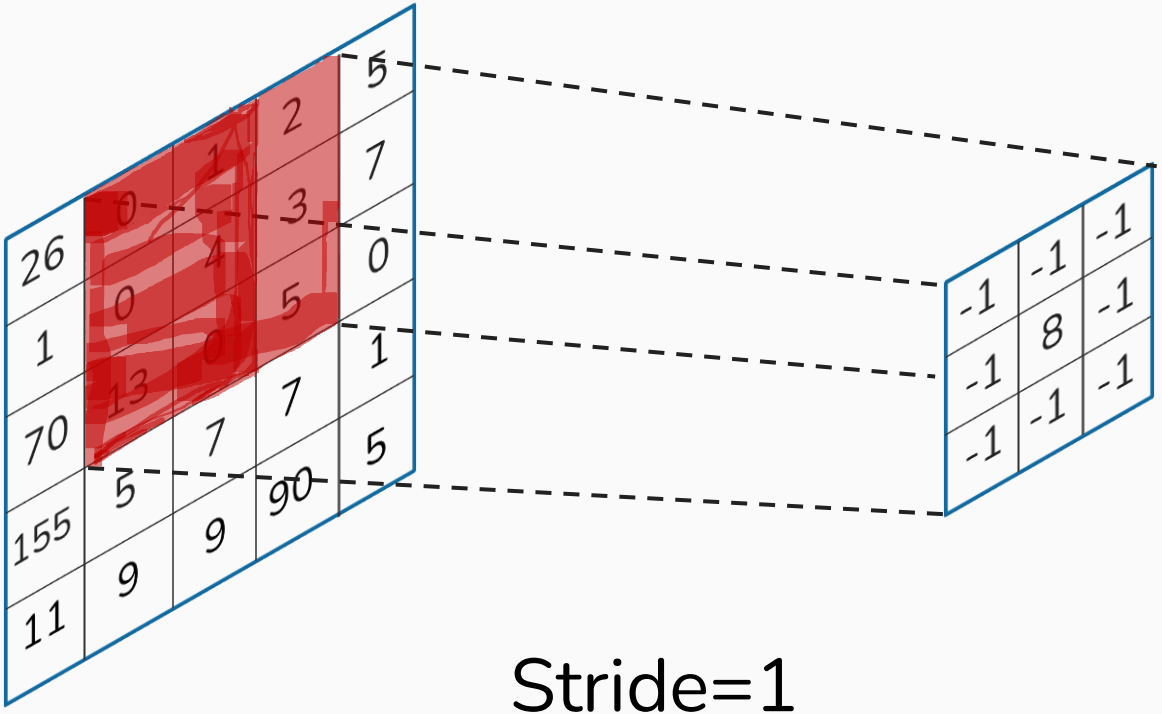

Stride=1

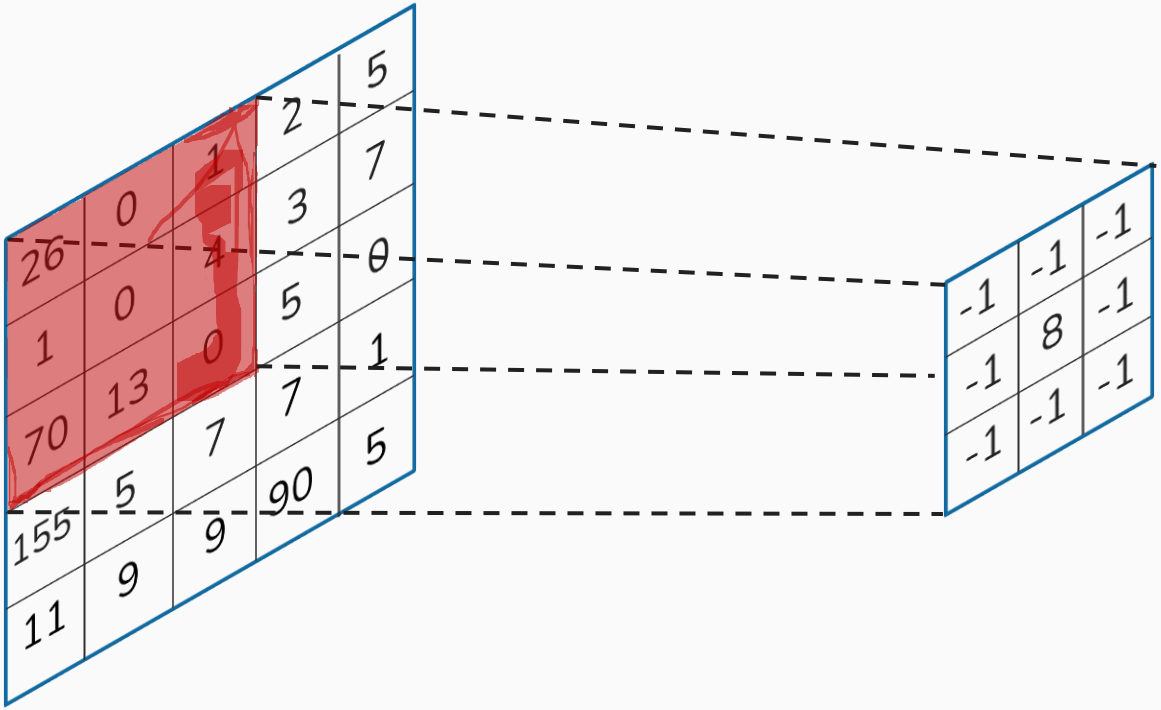
26
0
1
2
5
1
0
4
3
7
1
13
0
5
0
70
7
7
1
155
5
9
90
5
11
9
-1
-1
-1
-1
8
-1
-1
-1
-1

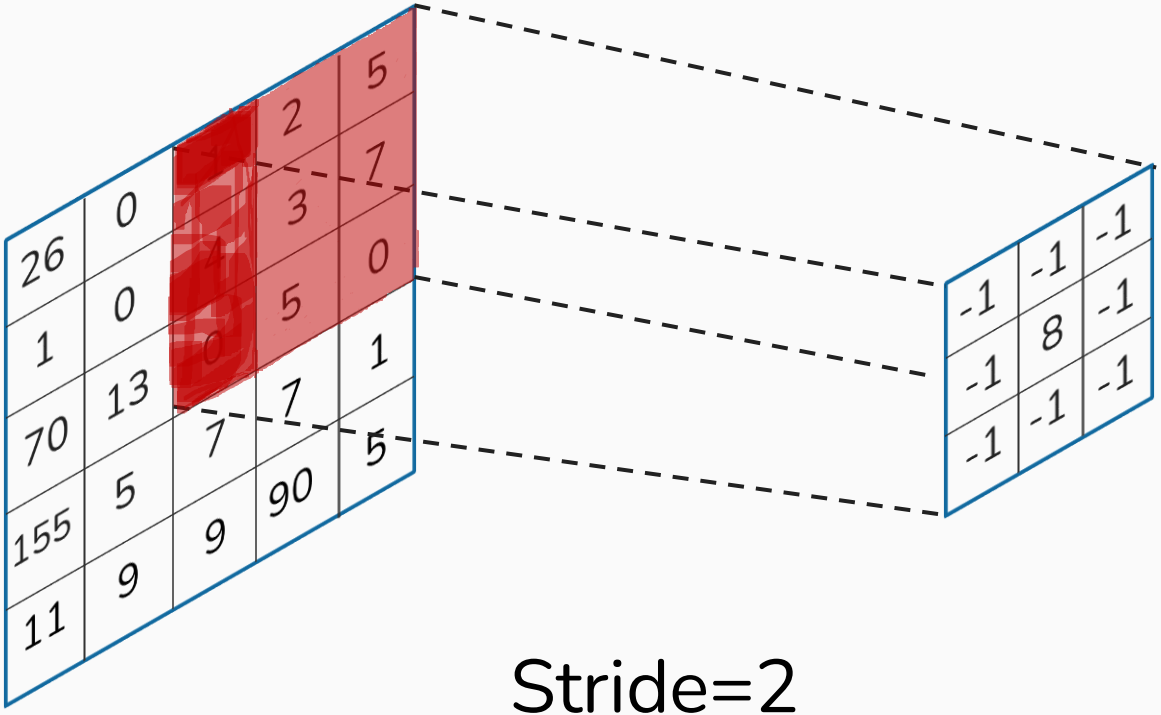

Stride=2

26	0	1	2	5
1	0	4	3	7
70	13	0	5	0
155	5	7	7	1
11	9	9	90	5

*

-1	-1	-1
-1	8	-1
-1	-1	-1

=

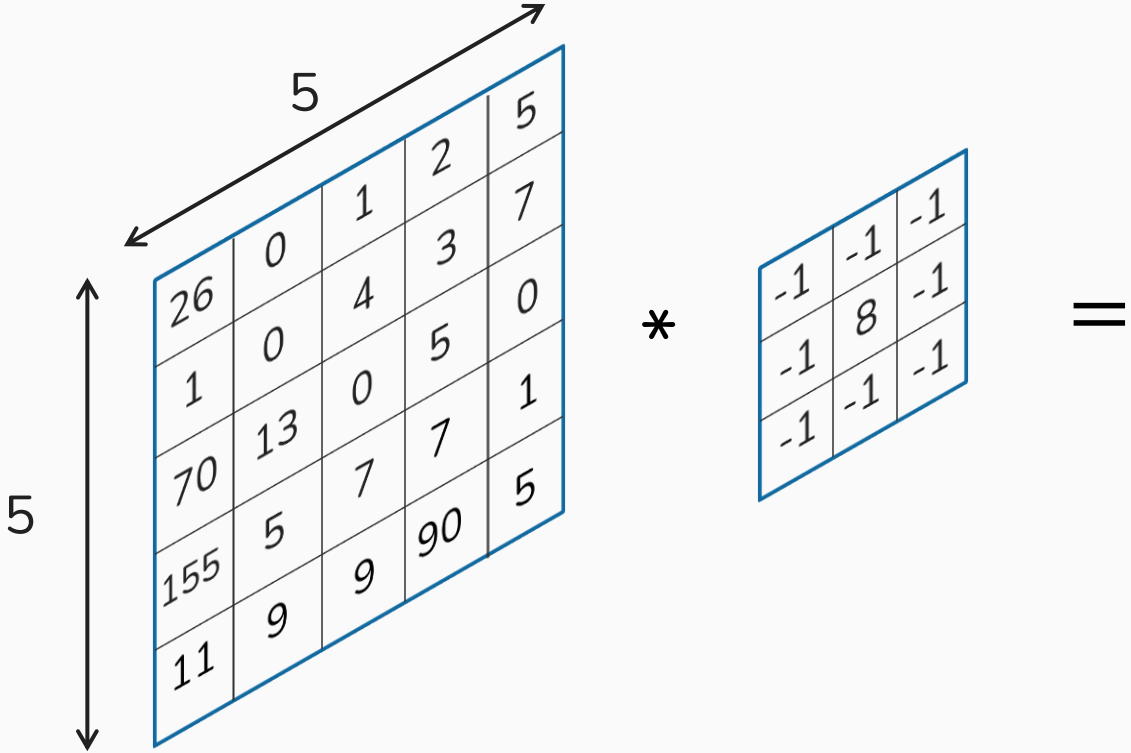
5
5
26 0 1 2 5
1 0 4 3 7
70 13 0 5 0
155 5 7 7 1
11 9 9 90 5
*
-1 -1 -1
-1 8 -1
-1 -1 -1
=

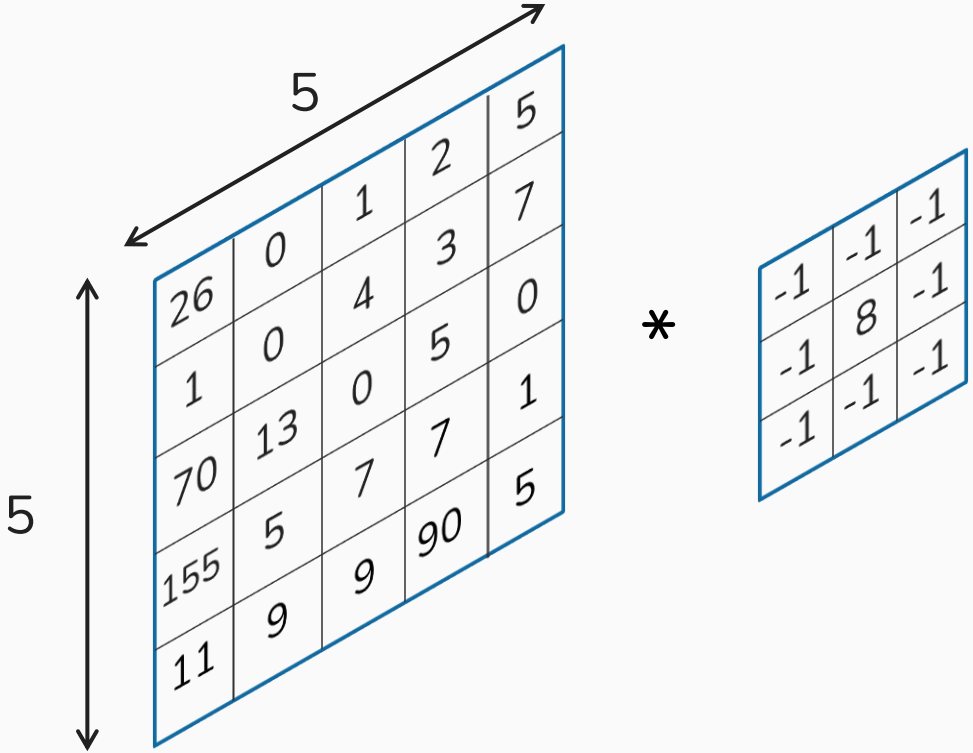

= Feature map 3x3

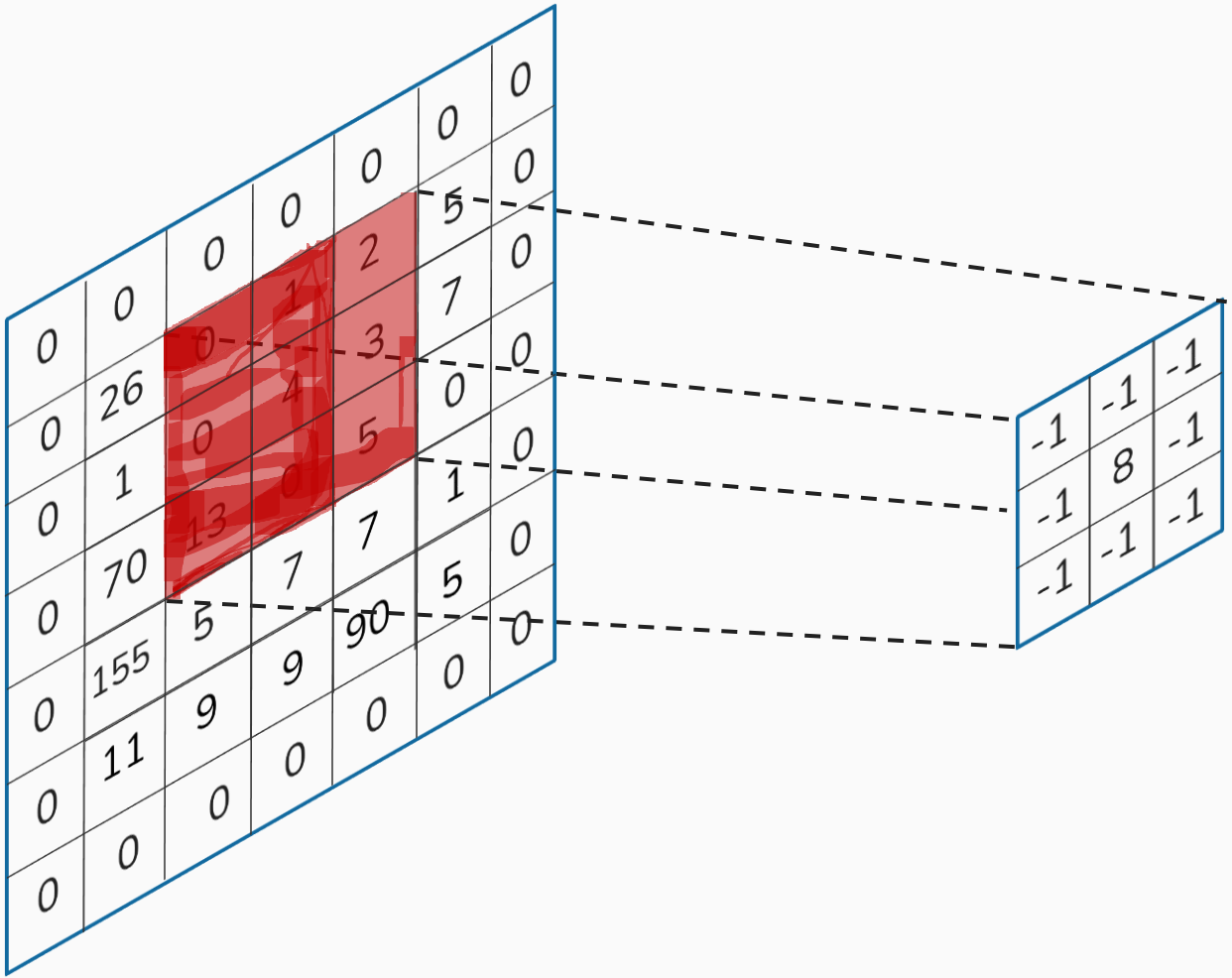
0 0 0 0 0 0
0 26 0 1 4 0
0 1 0 0 0 0
0 70 13 7 7 1
0 155 5 9 90 5
0 11 9 0 0 0
0 0 0 0 0 0
-1 -1 -1
-1 8 -1
-1 -1 -1

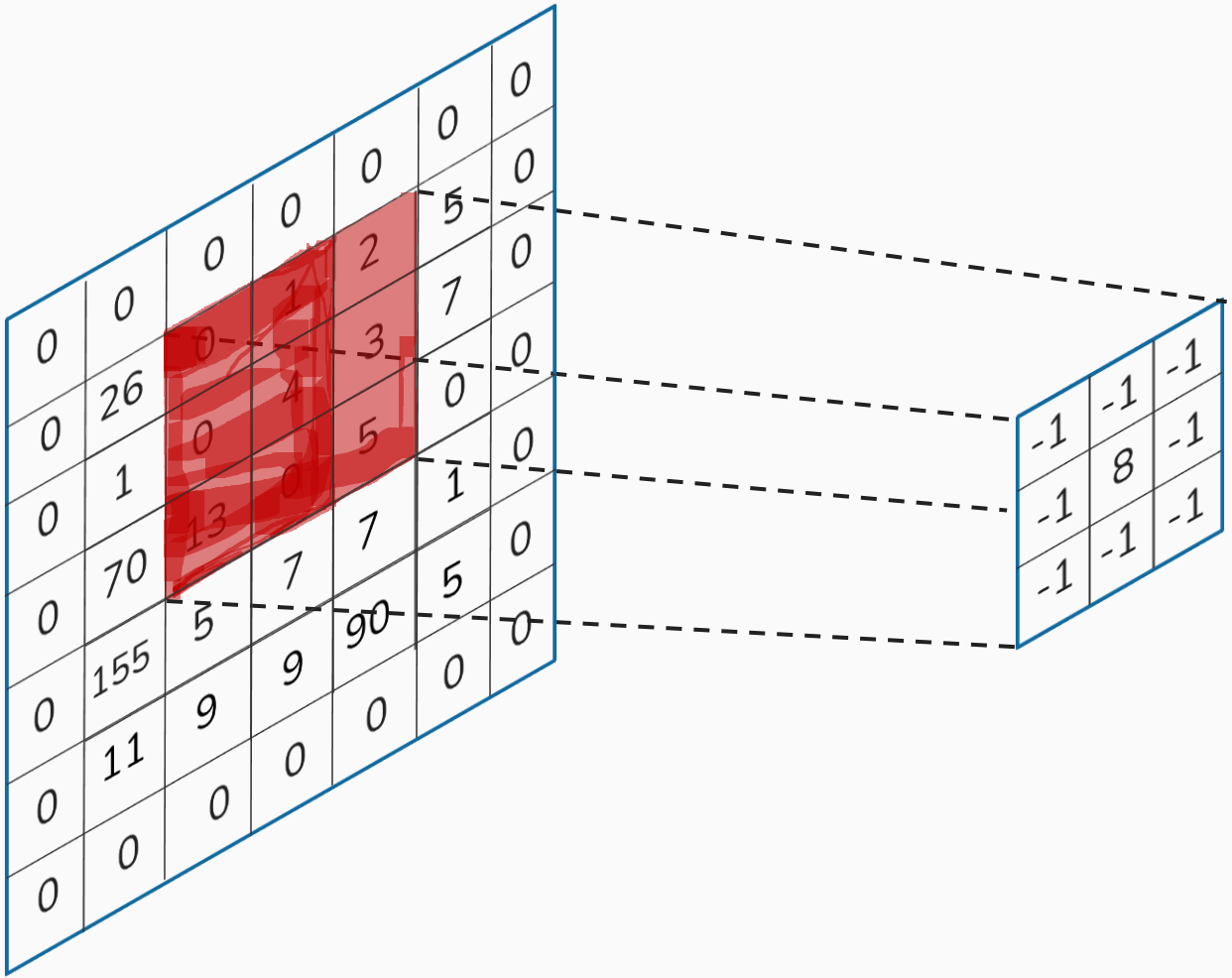
0 0 0 0 0 0
0 26 0 1 4 0
0 1 0 0 0 0
0 70 13 7 7 1
0 155 5 9 90 5
0 11 9 0 0 0
0 0 0 0 0 0
-1 -1 -1
-1 8 -1
-1 -1 -1

Padding

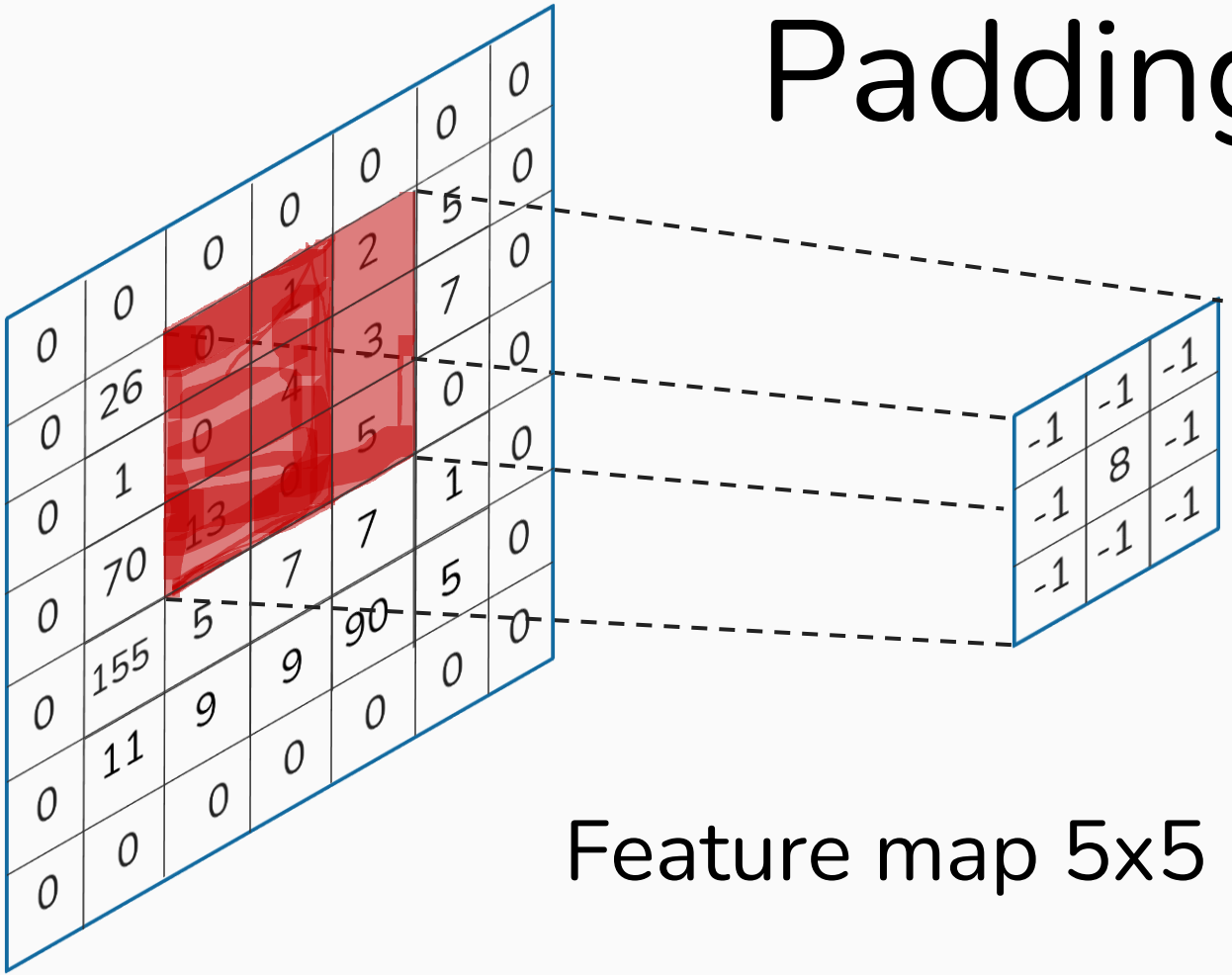

Feature map 5x5

5	0	5	0	5	7
15	7	81	5	2	5
3	9	0	1	3	7
2	13	0	4	5	0
26	70	11	0	7	1
1	155	5	9	90	5

*

-1	-1	-1
-1	8	-1
-1	-1	-1

5	0	5	0	5	7
15	7	81	5	2	5
3	9	0	1	3	7
2	13	0	4	5	0
26	70	11	0	7	1
1	155	5	9	90	5

*

-1	-1	-1
-1	8	-1
-1	-1	-1

=

-114	8	0
-138	-44	11
-234	-82	-61

5	0	5	0	5	7
15	7	81	5	2	5
3	9	0	1	3	7
2	13	0	4	5	0
26	70	11	0	7	1
1	155	5	9	90	5

*

-1	-1	-1
-1	8	-1
-1	-1	-1

=

-114	8	0
-138	-44	11
-234	-82	-61

→

5	0	5	0	5	7
15	7	81	5	2	5
3	9	0	1	3	7
2	13	0	4	5	0
26	70	11	0	7	1
1	155	5	9	90	5

$*$

-1	-1	-1
-1	8	-1
-1	-1	-1

$=$

-114	8	0
-138	-44	11
-234	-82	-61

$\longrightarrow$

$ReLU($

-114	8	0
-138	-44	11
-234	-82	-61

$) =$

$$
\begin{bmatrix} 5 & 0 & 5 & 0 & 5 & 7 \\ 15 & 7 & 81 & 5 & 2 & 5 \\ 3 & 9 & 0 & 1 & 3 & 7 \\ 2 & 13 & 0 & 4 & 5 & 0 \\ 26 & 70 & 11 & 0 & 7 & 1 \\ 1 & 155 & 5 & 9 & 90 & 5 \end{bmatrix}
*
\begin{bmatrix} -1 & -1 & -1 \\ -1 & 8 & -1 \\ -1 & -1 & -1 \end{bmatrix}
=
\begin{bmatrix} -114 & 8 & 0 \\ -138 & -44 & 11 \\ -234 & -82 & -61 \end{bmatrix}
\longrightarrow
$$

$$
ReLU\left(\begin{bmatrix} -114 & 8 & 0 \\ -138 & -44 & 11 \\ -234 & -82 & -61 \end{bmatrix}\right) = \begin{bmatrix} 0 & 8 & 0 \\ 0 & 0 & 11 \\ 0 & 0 & 0 \end{bmatrix}
$$

5	0	5	0	5	7
15	7	81	5	2	5
3	9	0	1	3	7
2	13	0	4	5	0
26	70	11	0	7	1
1	155	5	9	90	5

$*$

-1	-1	-1
-1	8	-1
-1	-1	-1

$=$

-114	8	0
-138	-44	11
-234	-82	-61

$\longrightarrow$

$ReLU($

-114	8	0
-138	-44	11
-234	-82	-61

$) =$

0	8	0
0	0	11
0	0	0

5	0	5	0	5	7
15	7	81	5	2	5
3	9	0	1	3	7
2	13	0	4	5	0
26	70	11	0	7	1
1	155	5	9	90	5

$*$

-1	-1	-1
-1	8	-1
-1	-1	-1

$=$

-114	8	0
-138	-44	11
-234	-82	-61

$ReLU($

-114	8	0
-138	-44	11
-234	-82	-61

$)$ $=$

0	8	0
0	0	11
0	0	0

Feature map

POOLING

0	8	0
0	0	11
0	0	0

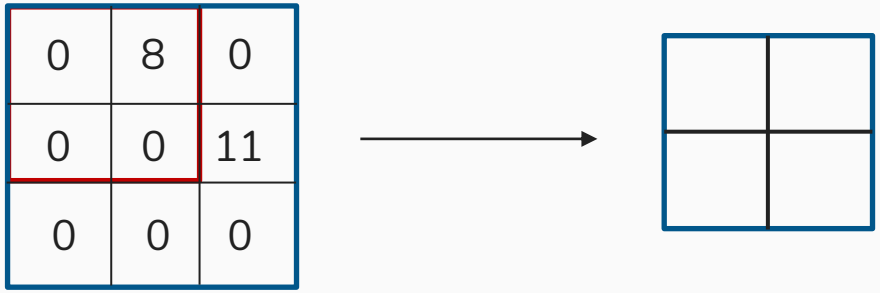
0
8
0
0
0
11
0
0
0

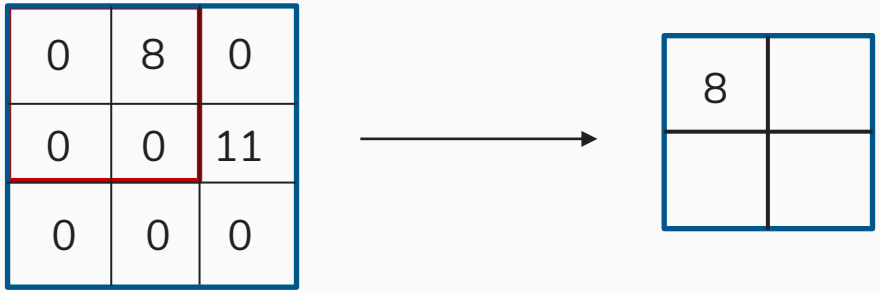
0
8
0
0
0
11
0
0
0
8

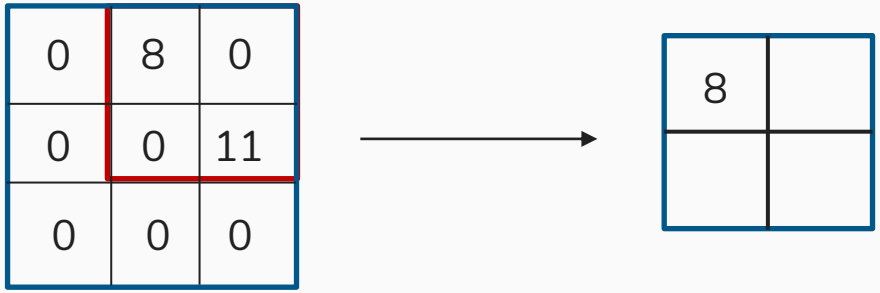
0
8
0
0
0
11
0
0
0
8

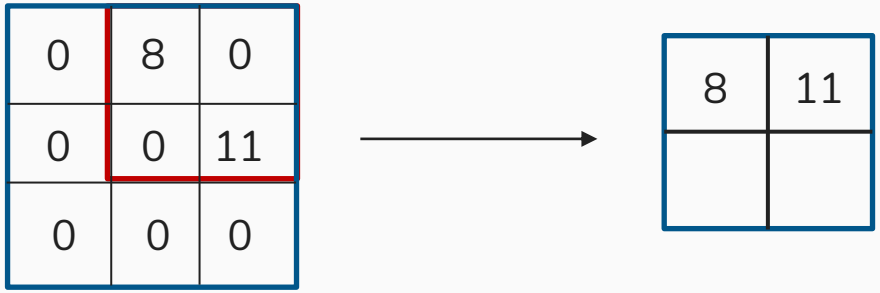
0
8
0
0
0
11
0
0
0
8
11

0	8	0
0	0	11
0	0	0

8	11

0	8	0
0	0	11
0	0	0

8	11
0	

0	8	0
0	0	11
0	0	0

8	11
0	

0	8	0
0	0	11
0	0	0

8	11
0	11

Max Pooling

0	8	0
0	0	11
0	0	0

→

8	11
0	11

Max Pooling

0	8	0
0	0	11
0	0	0

→

8	11
0	11

Max Pooling

0	8	0
0	0	11
0	0	0

8	11
0	11

Max Pooling

0	8	0
0	0	11
0	0	0

8	11
0	11

Why pooling ?

1-reduce # of paramters

1-reduce # of paramters
2-invariance to local translation

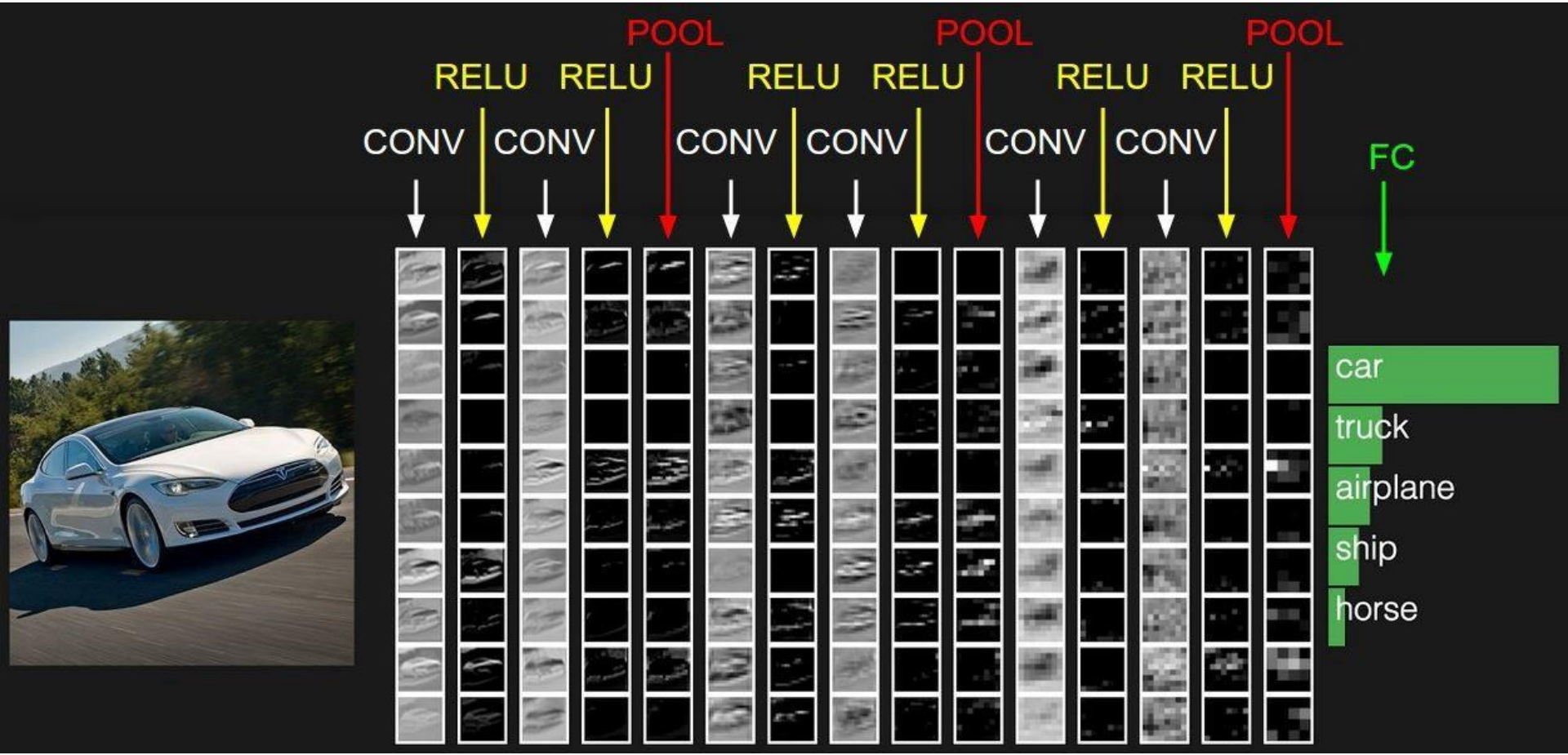
POOL
POOL
POOL
RELU
RELU
RELU
RELU
RELU
RELU
CONV
CONV
CONV
CONV
CONV
CONV
FC
car
truck
airplane
ship
horse

Transfer learning

What has been learned in a distribution P_1 is exploited to improve generalization in another distribution P_2

VGG16

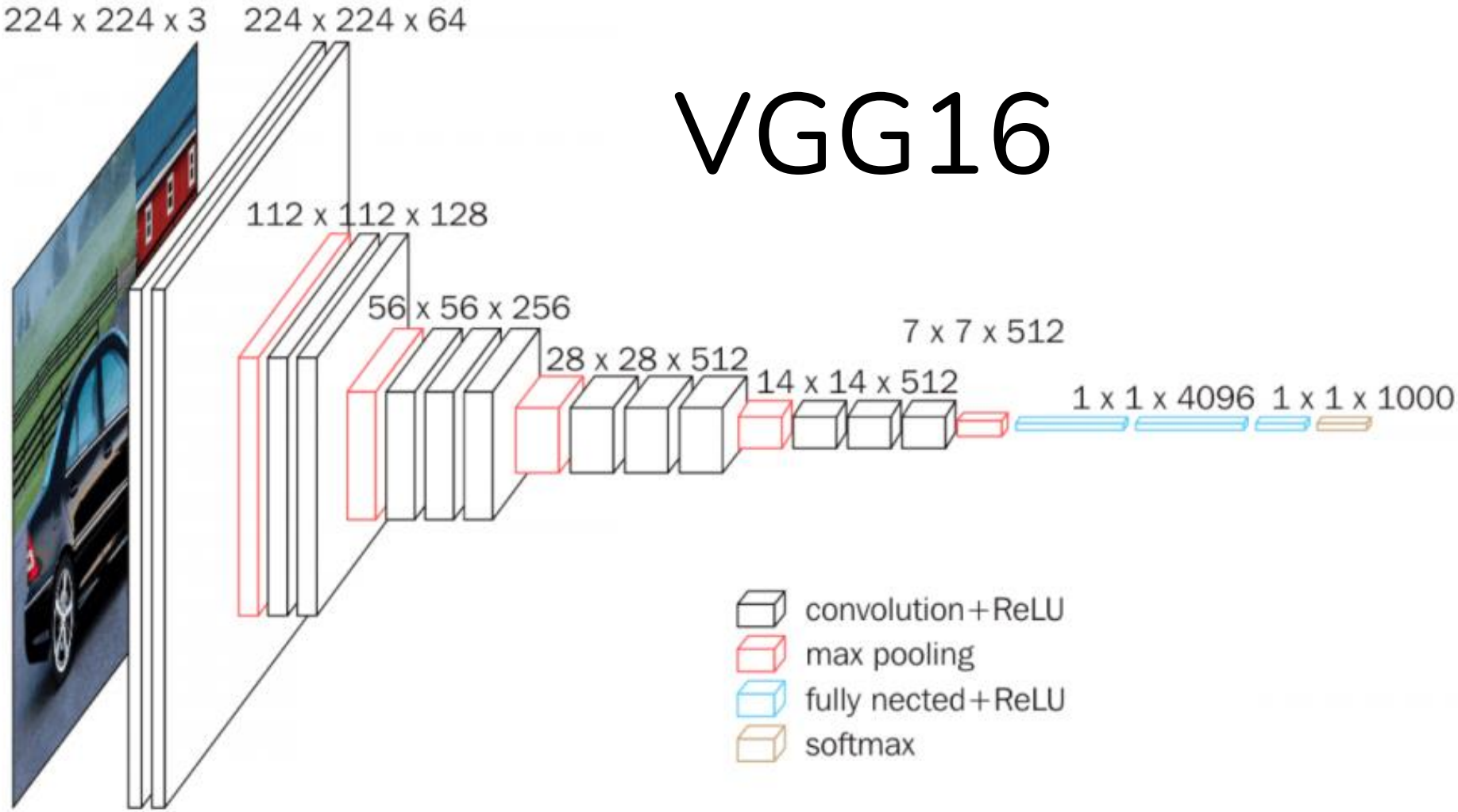
224 x 224 x 3
224 x 224 x 64
112 x 112 x 128
56 x 56 x 256
28 x 28 x 512
14 x 14 x 512
7 x 7 x 512
1 x 1 x 4096
1 x 1 x 1000
convolution+ReLU
max pooling
fully nected+ReLU
softmax

Residual learning

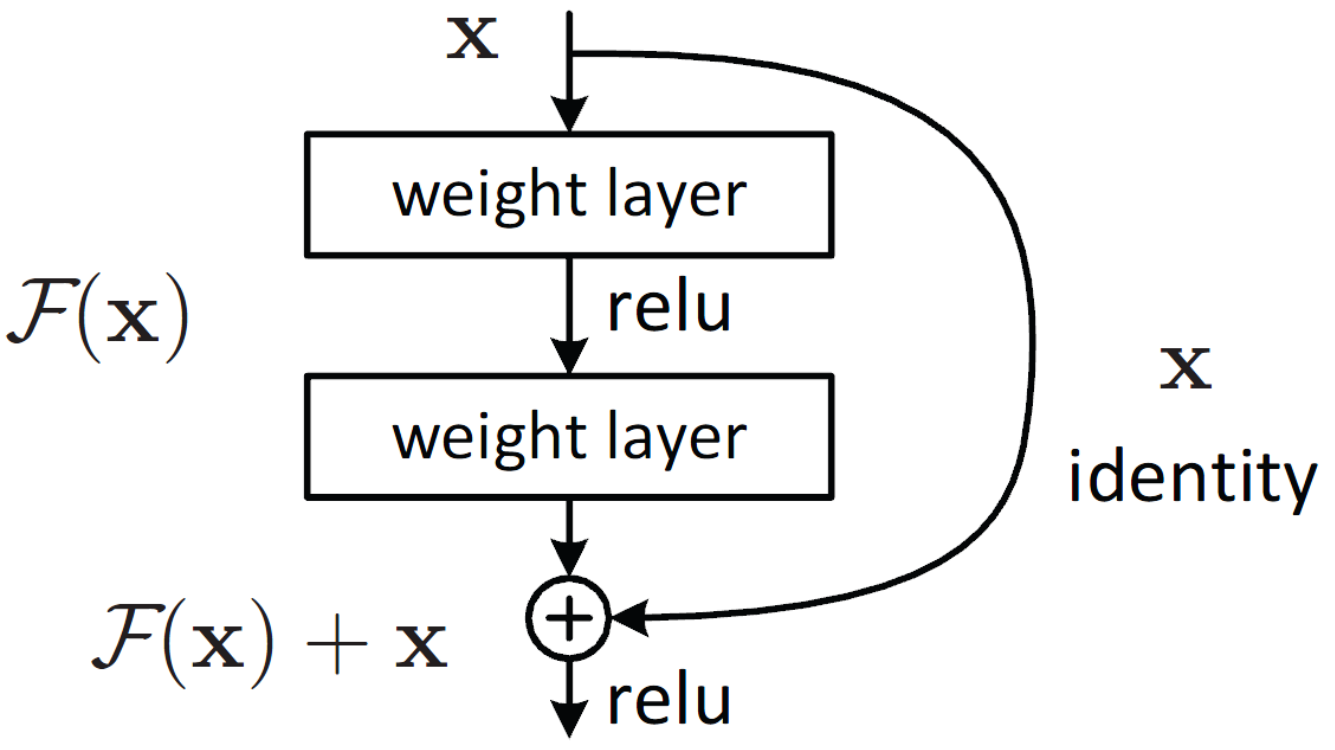

Retrain ResNet50

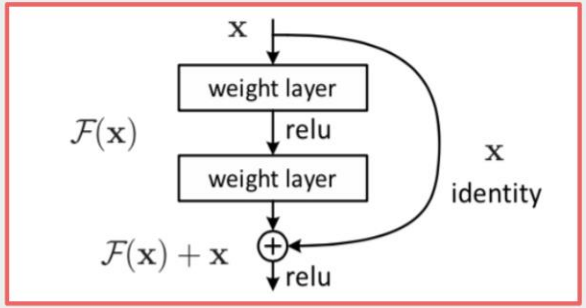

Residual Learning Block

ResNet50 Diagram

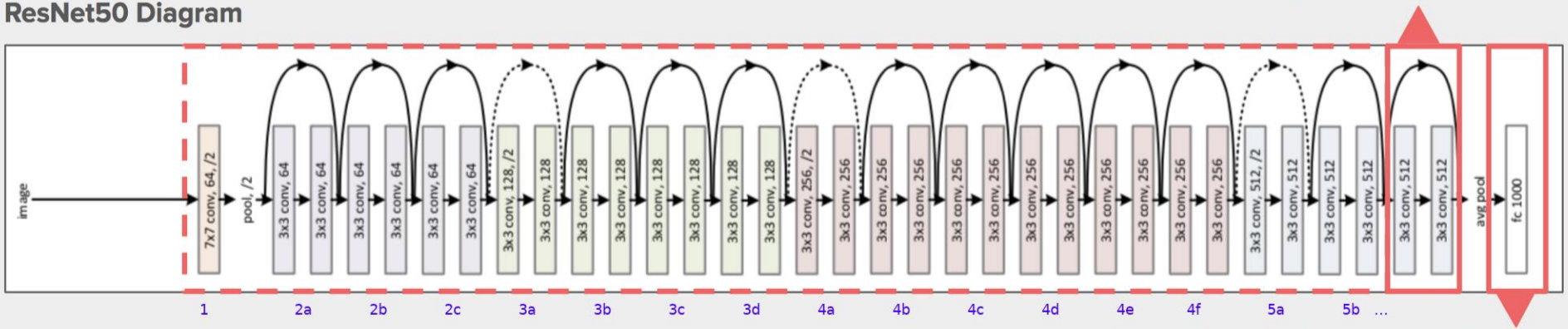

Re-architect fully-connected layers

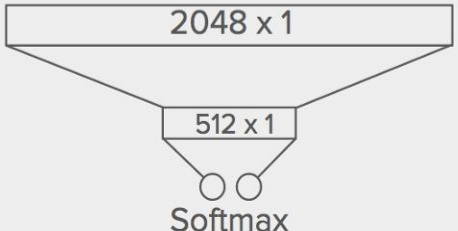

end