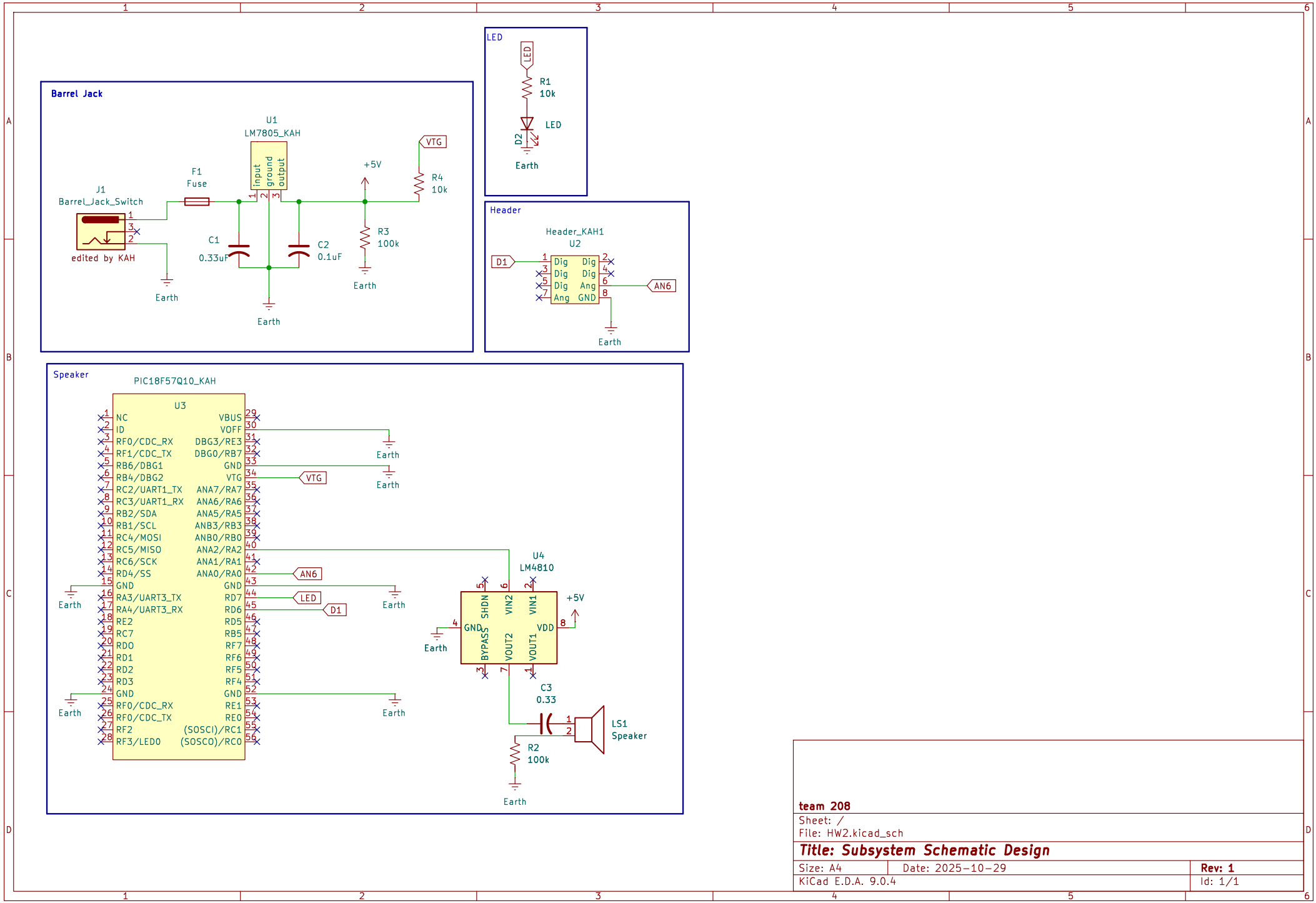

team 208

Sheet: /

File: HW2.kicad_sch

Title: Subsystem Schematic Design

Size: A4	Date: 2025-10-29	Rev: 1
KiCad E.D.A. 9.0.4		Id: 1/1