Report for CDA 3201L Lab #6

Sequential Circuits – Game Show Circuit

Name: Tuan Khang Phan **UID:** U30382645

Name: Huu Phat Nguyen **UID:** U46082380

I. Introduction

The purpose of this lab is to gain a deeper understanding of sequential circuit design by building a game show circuit. The circuit determines which of two contestants "rings in" first to answer a question. This lab also introduces configuring and using function generators to provide the clock signal for the circuit. The design uses D flip-flops (DFFs) to store state and combinational logic to compute the next state based on contestant inputs.

II. Methods and Materials

We used the following components and equipment:

- 74LS74 dual positive edge-triggered D flip-flop IC (provides both Q and $\overline{Q}$ outputs, eliminating the need for a separate inverter)
- 74LS08 quad 2-input AND gate IC
- 74LS32 quad 2-input OR gate IC
- Breadboard and jumper wires
- Two LEDs and resistors
- Three push buttons (contestant inputs X_0 and X_1, plus a reset button)
- 5 V DC power supply
- Function generator (for the clock signal)
- Oscilloscope

First, we derived the state transition table and excitation equations from the lab specification. We then filled in the Karnaugh maps for Q_0^* and Q_1^* and simplified the expressions. Using the 74LS74 datasheet, we identified the pin-out for the DFFs, including the asynchronous clear (CLR) pin used for reset. Importantly, the 74LS74 provides both Q and $\overline{Q}$ outputs, so the complemented state bits ($\overline{Q_0}$ and $\overline{Q_1}$) needed in the excitation equations are available directly from the flip-flop without requiring a separate inverter IC. We configured the function generator to output a square wave at an appropriate frequency and amplitude to serve as the clock. The circuit was wired on the breadboard using only three ICs (74LS74, 74LS08, 74LS32), connecting the combinational logic for the D inputs of each flip-flop, the clock from the function generator, and a push button for reset via the CLR pins. The Q outputs of the flip-flops were connected directly to LEDs through current-limiting resistors.

III. Results

1. State Transition Diagram and K-map for Q_1^*

The game show circuit has four states: State A (wait, $Y_1Y_0 = 00$), State B (contestant 0 wins, $Y_1Y_0 = 01$), State C (contestant 1 wins, $Y_1Y_0 = 10$), and State D (tie, $Y_1Y_0 = 11$). The state transition diagram is shown below:

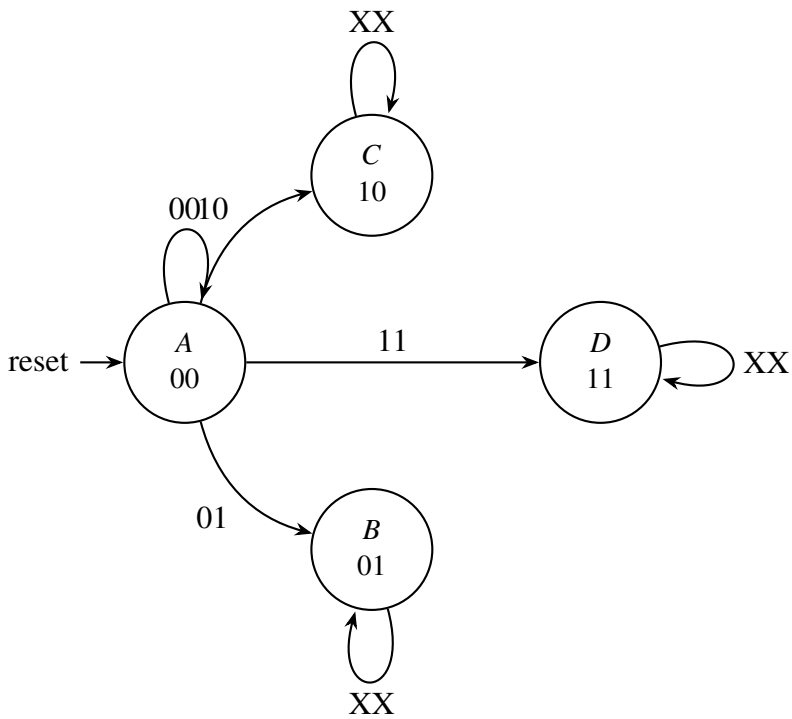

Figure 1: *State transition diagram for the game show circuit. Each state is labeled with its name and encoding (Q_1Q_0). Transitions are labeled with the input X_1X_0. States B, C, and D have self-loops on all inputs (denoted XX), meaning once entered, the state is locked until reset.*

The state transition table formalizing this behavior is:

	NS ($Q_1^*Q_0^*$) for Input X_1X_0				
PS (Q_1Q_0)	00	01	10	11	Y_1Y_0
A = 00	A	B	C	D	00
B = 01	B	B	B	B	01
C = 10	C	C	C	C	10
D = 11	D	D	D	D	11

From the state transition table, the K-map for Q_1^* is:

Q_1^*		X_1X_0			
		00	01	11	10
Q_1Q_0	00	0	0	1	1
	01	0	0	0	0
	11	1	1	1	1
	10	1	1	1	1

Grouping the 1s in the K-map:

- **Group 1 (8 cells):** All eight cells in rows $Q_1Q_0 = 10$ and $Q_1Q_0 = 11$ are 1. These two rows share $Q_1 = 1$, so this group simplifies to the single term Q_1.
- **Group 2 (4 cells):** The two cells at ($Q_1Q_0 = 00$, $X_1X_0 = 10$) and ($Q_1Q_0 = 00$, $X_1X_0 = 11$) combine with the adjacent cells at ($Q_1Q_0 = 10$, $X_1X_0 = 10$) and ($Q_1Q_0 = 10$, $X_1X_0 = 11$). These four cells share $Q_0 = 0$ and $X_1 = 1$, giving the term $X_1 \cdot \overline{Q_0}$.

The simplified excitation equation is:

$$Q_1^* = Q_1 + X_1 \cdot \overline{Q_0}$$

For reference, the K-map for Q_0^* (derived in the prelab) yields:

$$Q_0^* = Q_0 + X_0 \cdot \overline{Q_1}$$

Since the DFF characteristic equation is $Q^* = D$, the excitation equations become:

$$D_0 = Q_0 + X_0 \cdot \overline{Q_1}$$
$$D_1 = Q_1 + X_1 \cdot \overline{Q_0}$$

The output equations are simply:

$$Y_0 = Q_0$$
$$Y_1 = Q_1$$

2. Discussion of Expected Circuit Behavior

The circuit begins in the wait state (State A) after reset is asserted via the CLR pin on the 74LS74. In this state, both flip-flop outputs are 0, so both LEDs are off. The circuit samples the inputs X_1 and X_0 on each rising clock edge.

If contestant 0 presses their button first ($X_1X_0 = 01$), the next-state logic computes $D_0 = 0 + 1 \cdot 1 = 1$ and $D_1 = 0 + 0 \cdot 1 = 0$, so on the next clock edge the circuit transitions to State B ($Q_1Q_0 = 01$). LED0 turns on. Once in State B, $Q_0 = 1$, so $D_0 = 1 + \ldots = 1$ regardless of inputs, and $D_1 = 0 + X_1 \cdot \overline{Q_0} = 0 + X_1 \cdot 0 = 0$ regardless of X_1. The circuit is locked in State B until reset.

Symmetrically, if contestant 1 presses first ($X_1X_0 = 10$), the circuit moves to State C ($Q_1Q_0 = 10$), lighting LED1 and locking out further input changes.

If both contestants press simultaneously ($X_1X_0 = 11$), the circuit transitions to State D ($Q_1Q_0 = 11$), both LEDs light up indicating a tie, and the circuit locks in this state.

In all non-wait states (B, C, D), the excitation equations ensure that the present state bits that are already 1 remain 1, and the bits that are 0 cannot become 1 because the corresponding input term is multiplied by the complement of the other state bit (which is already 1). This is what makes the circuit "lock" once a winner is determined.

To return to the wait state, a third push button is used to assert the asynchronous CLR input on the 74LS74 (active low), which forces both flip-flop outputs to 0 regardless of the clock or D inputs.

3. Physical Circuit Testing

The circuit was built on a breadboard using only three ICs: the 74LS74 DFF IC, a 74LS08 AND gate IC, and a 74LS32 OR gate IC. No inverter IC was needed because the $\overline{Q}$ outputs of the 74LS74 directly provide the complemented state bits. The function generator was connected to the clock input of both flip-flops, and an oscilloscope probe was used to verify the clock signal.

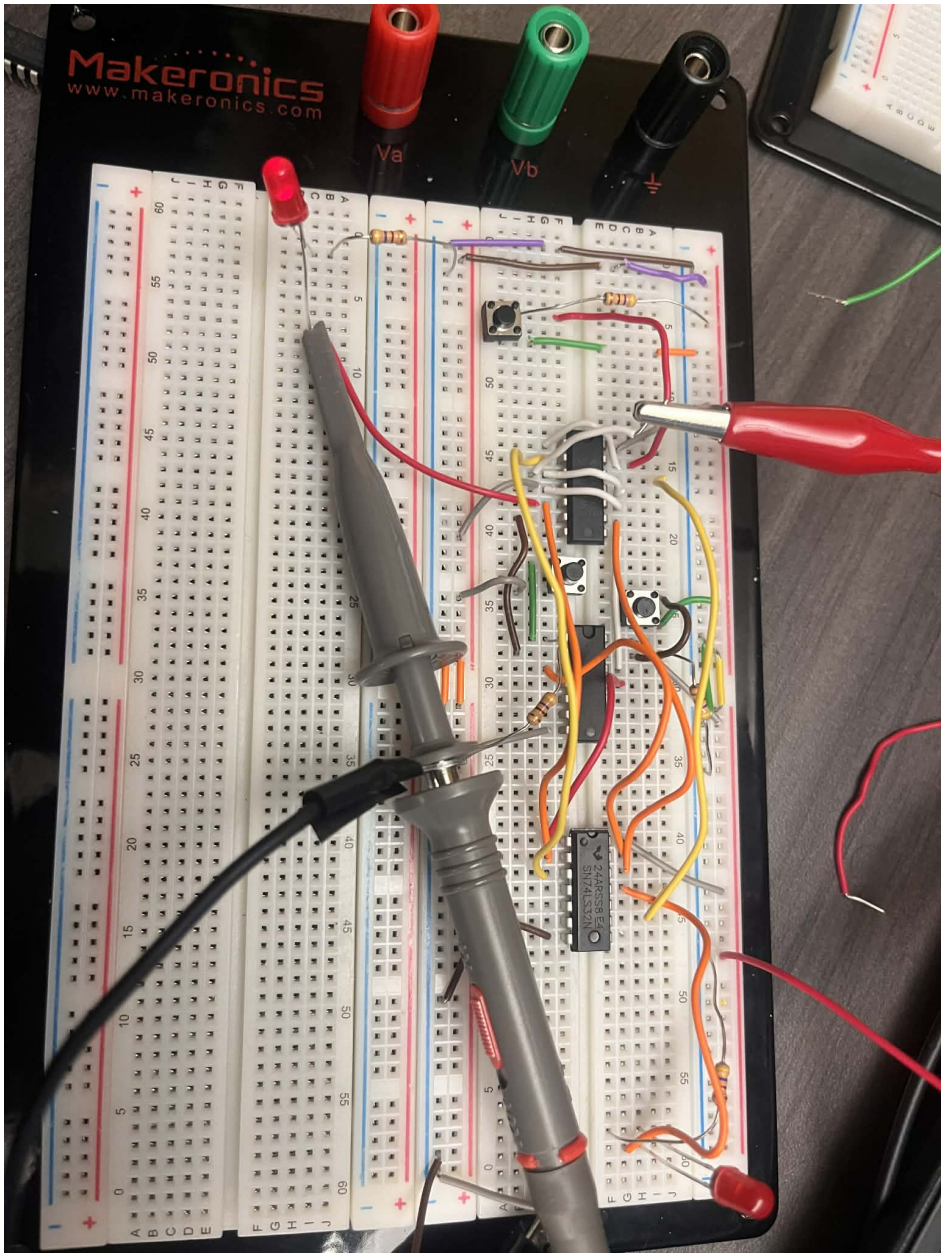

Figure 2: *Overview of the game show circuit implementation on the breadboard, showing the 74LS74 DFF IC, combinational logic wiring, oscilloscope probe, and LED outputs.*

Supplementary Video: Circuit Demonstration Recording (Google Drive)

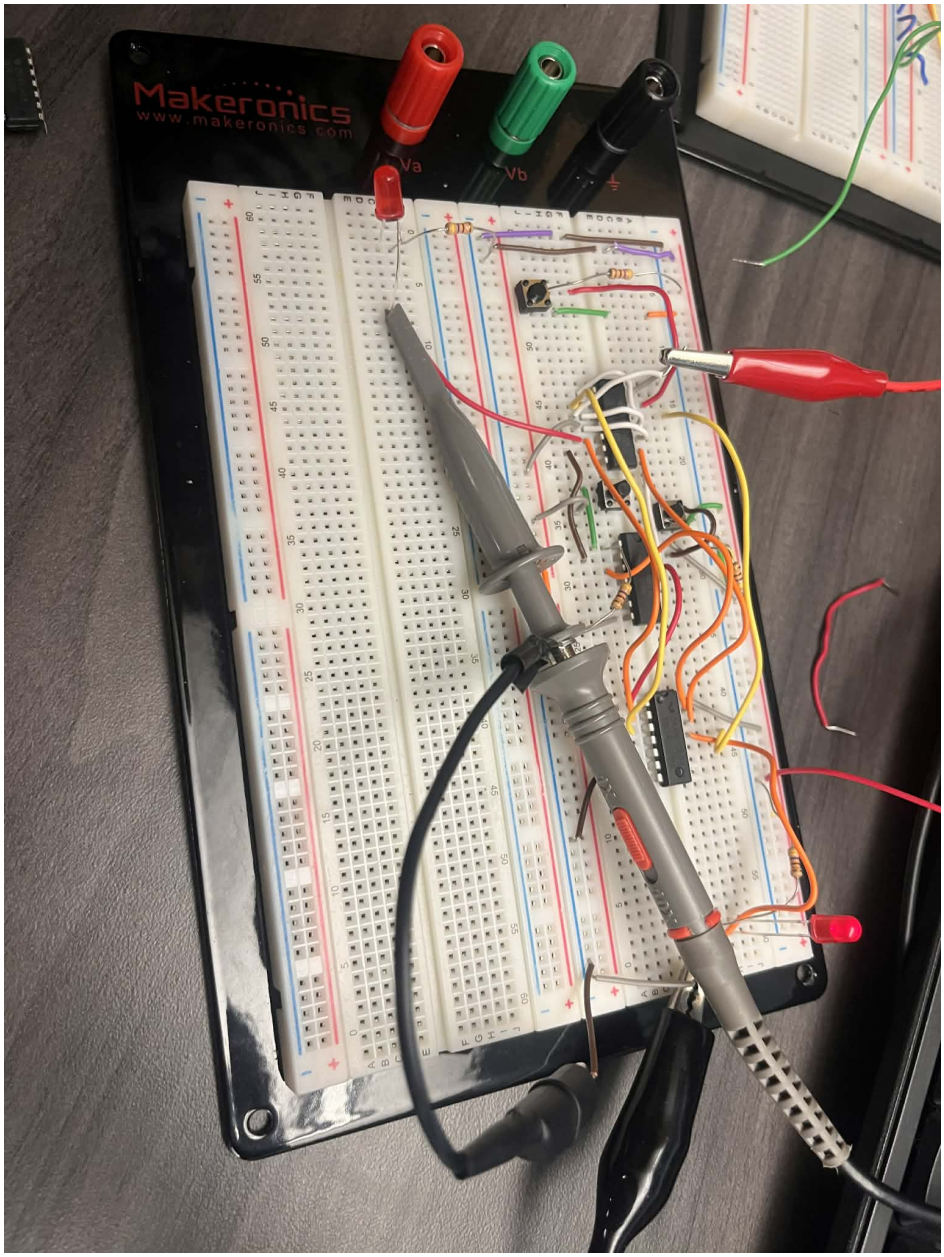

Figure 3: *Circuit in the wait state (State A) after reset is asserted. Both LEDs are off, confirming* $Q_1Q_0 = 00$.

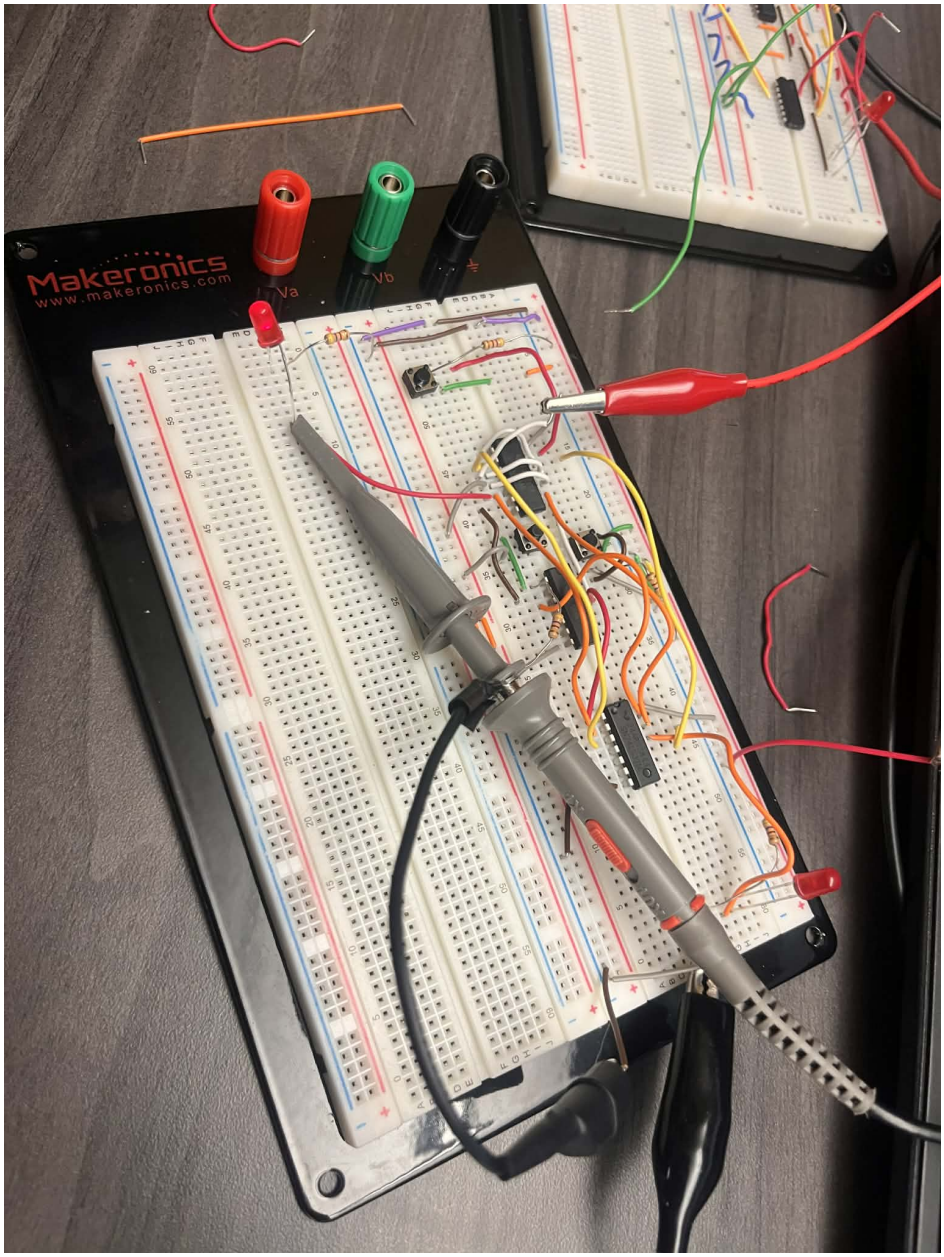

Figure 4: *Testing the circuit: wait state verified with oscilloscope probe connected to monitor the clock signal.*

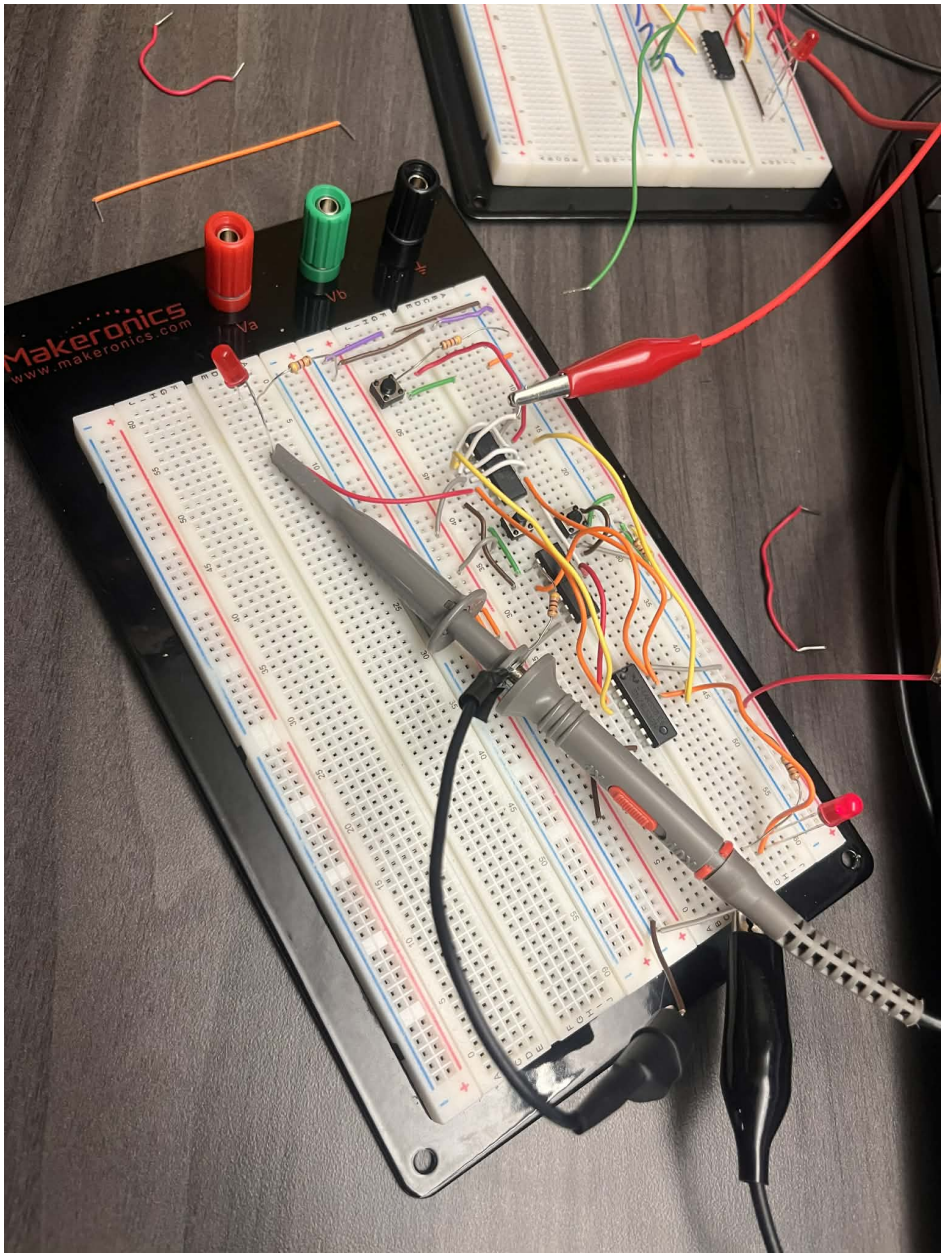

Figure 5: *Contestant 0 wins: after asserting X_0, LED0 turns on (State B, $Q_1Q_0 = 01$). The circuit remains locked in this state even when X_1 is subsequently asserted.*

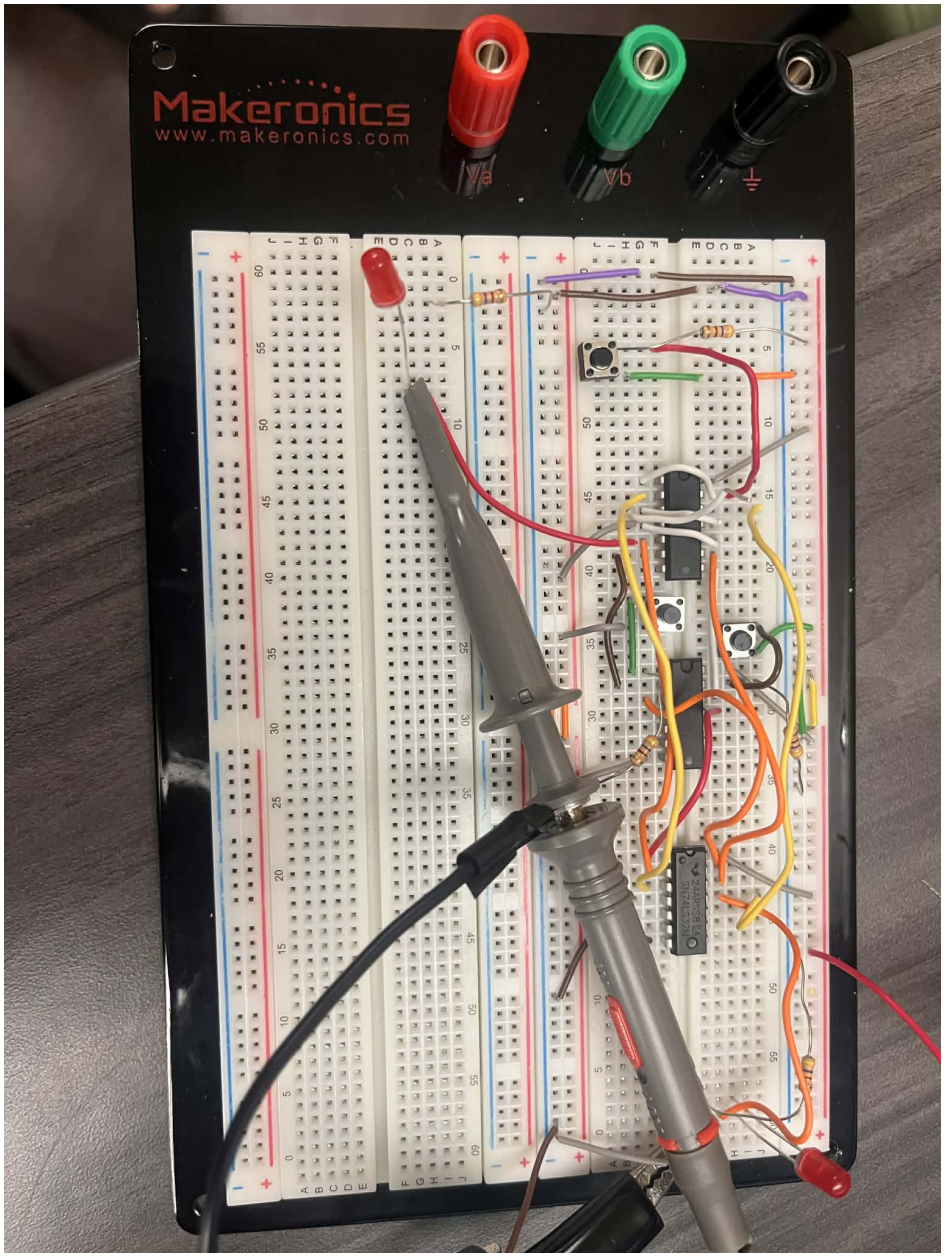

Figure 6: *Contestant 1 wins: after resetting and asserting X_1, LED1 turns on (State C, $Q_1Q_0 = 10$). The circuit remains locked in this state regardless of further input.*

IV. Discussion

The circuit behaved as expected during testing. After asserting reset, both LEDs were off, confirming the circuit was in the wait state. When contestant 0's button was pressed, LED0 turned on and remained on even after contestant 1's button was pressed subsequently. After resetting and pressing contestant 1's button first, LED1 turned on and stayed on regardless of contestant 0's input. This confirms the locking behavior designed into the state machine.

The results were consistent with our expectations from the state transition table and excitation equations. The symmetry between the two excitation equations ($D_0 = Q_0 + X_0 \cdot \overline{Q_1}$ and $D_1 =$

$Q_1 + X_1 \cdot \overline{Q_0}$) reflects the symmetric design of the circuit, where each contestant's path to winning is identical in structure. The function generator provided a stable clock signal, which was verified on the oscilloscope.

V. Conclusion

In this lab, we designed and implemented a sequential game show circuit using D flip-flops. The circuit correctly determines which contestant rings in first and locks the result until reset. We derived the excitation equations using Karnaugh maps and implemented the combinational logic with only three ICs: a 74LS74 DFF (whose $\overline{Q}$ outputs provided the needed complements, eliminating the need for a separate inverter), a 74LS08 AND gate, and a 74LS32 OR gate. Three push buttons served as inputs for contestant 0, contestant 1, and reset. A function generator provided the clock signal. The lab reinforced our understanding of sequential circuit design, including state transition tables, excitation equations, and the practical considerations of clocking and resetting flip-flop based circuits.