GranIT: Granularity-Adaptive Interrogation Transformer for Cross-Scale Deepfake Forensics

Khang-Thinh Nguyen
Faculty of Information Technology
University of Science
Vietnam National University - HCMC
Ho Chi Minh city, Vietnam
nkthinh2406@apcs.fitus.edu.vn

Van-Tinh Nguyen
Faculty of Information Technology
University of Science
Vietnam National University - HCMC
Ho Chi Minh city, Vietnam
nvtinh2433@apcs.fitus.edu.vn

Abstract

Detecting manipulated media in cross-domain scenarios remains a formidable challenge, as existing methods often fail to effectively align spatial and frequency modalities, leading to poor generalization on unseen compressions. In this paper, we propose the Granularity-Adaptive Interrogation Transformer (GranIT), a multi-granularity framework designed to robustly detect face forgeries by synergizing global spatial contexts, localized facial boundaries, and high-frequency micro-artifacts. To overcome the structural disruption of traditional frequency transforms, GranIT utilizes a Learnable High-Pass Filter (LHPF) combined with an Adaptive Facial Crop (AFC) module to autonomously localize forgery-rich regions while maintaining a strict 1:1 RGB-frequency correspondence. Unlike prior fusion-based methods, we explicitly model cross-scale inconsistency via a Cascaded Cross-Scale Interrogation Mechanism (CCSIM), which explicitly anchors these local anomalies to the holistic image context, mitigating negative transfer on heavily degraded data. Cross-dataset evaluations demonstrate that GranIT outperforms state-of-the-art baselines, achieving notable AUCs of 76.10% on the highly compressed DFDC and 74.19% on the uncontrolled Wild-DF dataset. This leads to improved robustness under unseen compression and domain shift.

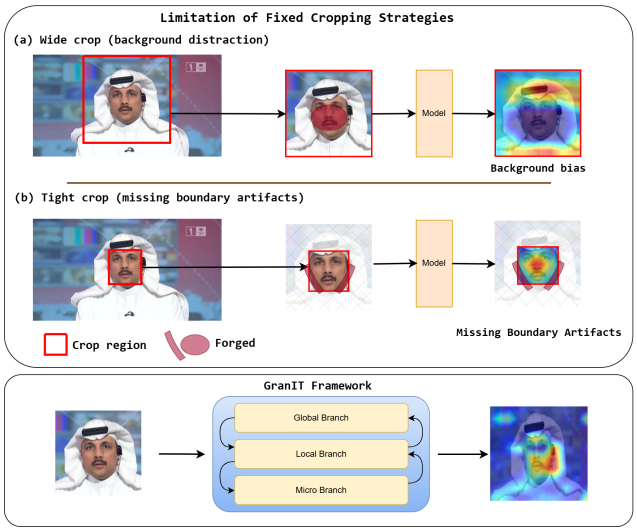

Figure 1. **Illustration of deepfake detection problems:** (a) With wide cropping, models tend to be distracted by background information (context bias), reduce the spatial focus on forged region. (b) With tight cropping, the important blending boundaries (e.g., cheek, hairline) may be removed, resulting in missing forgery artifacts. The below flow is the overall GranIT framework, in which the global features, local features and micro features is concurrently modeled and interacted with the aim to capturing the multi-scaled inconsistencies in the image.

1. Introduction

In recent years, the rapid development of generative AI (e.g. GAN[9]) has led to the growth of deepfake - a manipulation technique swapping faces with highly realistic quality[25, 32]. This raises ethical concerns regarding security, misinformation, and personal privacy [3]. To cope with these challenges, many approaches on deepfake detection based on deep learning have been proposed, especially Convolutional Neural Networks (CNNs [21]) and Vision Transformers (ViTs [7]). Nevertheless, the sophistication of the cutting-edge deepfake generations (e.g., FaceForensics++ [23], Celeb-DF [15]) degrades the generalization of traditional detectors when testing on cross-datasets [28, 31].

One less-studied factor contributing to this limitation lies in image preprocessing, particularly face cropping strategies (as shown in **Fig. 1**). Forgery artifacts manifest as cross-scale inconsistencies rather than isolated features.

Specifically,the tight-crop method often misses the blending boundaries at the edge of the cheek, the hairline or the lips[10, 20]. Conversely, the wide (full-face resize) method compresses the pixels, missing the subtle micro-artifacts and sometimes making the model prone to lazily depending on the irrelevant contents (e.g., background, hair) [8]. Although recent studies have applied image-cropping mechanisms, they mainly operate on the RGB color space [5, 17, 19]. In this space, advanced deepfake algorithms have smoothed out the surface, easily mislead the neural networks and caused the cropping model to lose its spatial focus.

This suggests that using only a single representation may not enough. In reality, forgery evidence can appear at different levels, such as global inconsistencies between the face and the background, local blending artifacts around manipulated regions, and subtle high-frequency noise introduced during the synthesis process.

To address these limitations, we propose a fundamentally different perspective: deepfake detection should be formulated as a cross-scale consistency verification problem rather than independent feature extraction. Based on this insight, we develop GranIT, a granularity-adaptive framework that explicitly models interactions between global, local, and micro-level representations.

We hypothesize that deepfake detection can benefit from modeling inconsistencies across different scales. In particular, global semantic information can be used to examine whether local spatial artifacts and high-frequency cues are coherent, instead of simply fusing multi-branch features.

The main contributions of this paper are summarized as follows:

- **Cross-scale inconsistency insight.** We identify that deepfake artifacts primarily manifest as inconsistencies across different granularity levels (global semantics, local boundaries, and high-frequency noise), rather than isolated features. This challenges the common assumption of independent feature extraction.
- **Granularity-Adaptive Interrogation framework.** We propose GranIT, a multi-branch architecture that goes beyond conventional feature fusion by explicitly modeling cross-scale verification through a cascaded interrogation mechanism. This allows global representations to actively validate local and micro-level evidence.
- **Frequency-guided adaptive localization.** We introduce a learnable high-pass filtering mechanism coupled with adaptive face cropping, enabling the model to dynamically focus on forgery-rich regions while preserving spatial-frequency alignment, leading to improved robustness under domain shift.
- **Cross-domain generalization.** Extensive experiments demonstrate that our approach significantly improves robustness on unseen datasets, particularly under heavy compression, outperforming prior methods by a large margin.

2. Related Work

2.1. Deepfake Detection

Architectures. In recent years, deepfake detection research has relied on forensic artifacts, where handcraft forged features such as frequency inconsistency [26] or the noise-based method [29], have been used to model classification. These approaches perform well in early-stage manipulation but lack generalizability and scalability. As the field transitioned toward deep learning, Convolutional Neural Networks (CNNs) [21] became the dominant architecture by automatically capturing spatial artifacts directly from raw images (e.g., Xception [4], EfficientNet [24]). However, they exhibit the poor generalization when testing on unseen dataset [16]. Subsequently, Vision Transformers (ViTs) [7] emerged as a more powerful alternative, providing a stronger ability to model long-range dependencies and global facial inconsistencies.

Datasets. With the rapid development of Generative AI, deepfakes now exhibit increasingly fine-grained artifacts, making them more difficult to detect with the human eye. Moreover, deepfake faces are generated in the highly comprehensive manner[15, 23], embedding subtle forged cues across diverse manipulation variants (e.g., FaceSwap [18], SimSwap [2]). This presents a challenge for existing detection methods and may indicate potential biases, along with limited robustness to distributional shifts caused by identity-preserving manipulations and stylistically diverse generative content [16].

2.2. Global Context in Deepfake Detection

Many researchers usually input the full face and the background together. Nirkin et al. [20] show that the context between the face and the background is very important to find the discrepancy. This is the reason why we keep the full image in our Global Branch. But if we only look at the global context, the model will miss the small and local artifact. However, relying solely on global context often introduces significant bias toward background or irrelevant regions [8], which degrades generalization when facing unseen data distributions.

2.3. Local Face Cropping and Region Selection

To find the local forged details, cropping the face is a very necessary step [23]. Normal methods always use a fixed bounding box to crop the face. However, these methods typically rely on fixed or RGB-based cropping strategies, which may overlook critical boundary artifacts or fail under subtle manipulations.

2.4. Micro-scope Frequency Information

When the fake video is compressed, the RGB image becomes very smooth and it's to see the artifact. Many papers find that the high-frequency spectrum has a lot of fake errors [28]. F3-Net [22] and BiHPF [14] are the one of the first methods to use frequency to detect forged contents. Nevertheless, these approaches [26, 27] often treat frequency features as complementary signals rather than explicitly modeling their interaction with spatial representations, limiting their effectiveness under domain shift.

In summary, existing deepfake detection methods suffer from three key limitations: (1) they treat global, local, and frequency features independently or rely on naive fusion strategies; (2) they lack explicit modeling of cross-scale consistency; and (3) they are vulnerable to domain shift due to over-reliance on dataset-specific artifacts. These limitations motivate the need for a unified framework that explicitly verifies consistency across multiple granularity levels.

2.5. Granularity-Adaptive Interrogation Transformer

In practice, deepfake artifacts often appear as inconsistencies across levels. For example, a manipulated facial region may not match the global background context or the lighting on the face may not match with the background scene [1]. Simply concatenating features may not be enough to capture these cross-scale differences.

Based on this observation, we see that deepfake detection should not only combine different-scale information but also examine the relationships between them. Therefore, we propose GranIT, where global representations interact with local spatial and frequency tokens through cross-attention. Instead of passively fusing features, our model encourages cross-scale comparison, which helps to improve robustness in the cross-dataset scenarios.

3. Proposed Approach

3.1. Overview

Given an input facial image $X \in \mathbb{R}^{C\times H\times W}$, the task is to predict a binary label $y \in \{0, 1\}$, where $y = 0$ denotes a real image and $y = 1$ denotes a manipulated image. The primary objective is to learn a mapping function $f : X \to y$ that generalizes effectively across various datasets and compression conditions.

To achieve this, we address the challenge of building a robust framework by analyzing three distinct levels of evidence. We introduce GranIT, a framework that integrates information from three levels of image analysis: global, local, and micro branches, based on their specific feature characteristics.

3.2. Overall Framework

3.2.1. Architectures

We build the framework with the backbone of Vision Transformer (ViT) [7], already fine-tuned on LAION-2B. Nevertheless, fine-tuning all layers of ViT is not only computational cost, but also prone to forgetting what the model has learned before. Furthermore, to adapt large pre-trained models efficiently while preserving their generalization capability, we integrate Low-Rank Adaptation (LoRA) [12] , which enables lightweight fine-tuning without overfitting to dataset-specific artifacts. The main idea of LoRA comes from the observation of fine-tuning the large models that we don't have to train a model full of layers. Instead, we can represent the change ΔW by the product of two low-rank matrices and freeze all blocks in ViT (as shown in **Fig. 3**). This significantly reduces the fine-tuned parameters as well as the computational cost.

Suppose that we have the initial weight matrix $W \in \mathbb{R}^{d\times k}$. Instead of adjusting this matrix directly, LoRA adds a low-rank updated matrix ΔW:

$$W' = W + \Delta W \tag{1}$$

Specifically, the low-rank matrices ΔW is the product of $A \in \mathbb{R}^{r\times k}$ and $B \in \mathbb{R}^{d\times r}$, which are used to parameterize the weight update. Besides, LoRA adds a ratio of the alpha α and the rank r to control the impact of this update matrix ΔW:

$$\Delta W = \left(\frac{\alpha}{r}\right) \times BA \tag{2}$$

For clarity, we summarize the main inputs used in our framework:

- X_{wide}: context-rich input image,
- X_{crop}: adaptively cropped facial region,
- X_{freq}: high-frequency representation derived from X_{crop}.

3.2.2. Granularity-Adaptive Interrogation Transformer

To effectively analyze facial manipulations across multiple levels of evidence, the Granularity-Adaptive Interrogation Transformer (GranIT) requires a context-aware input rather than a tightly constrained facial crop. Conventional deepfake detection models often discard the background, inadvertently losing crucial forensic clues such as facial background blending inconsistencies.

To preserve this contextual information, we derive a wide-crop input image based on the initial facial landmarks. Specifically, let m denote the tight facial bounding box detected by a standard face detector (e.g., MTCNN [30]). We expand this bounding box by a margin factor β, where $X_{wide} = \beta m$. This expansion ensures that the resulting cropped encompasses region not only the core facial features but also the surrounding context, such as hair boundaries and immediate background structures.

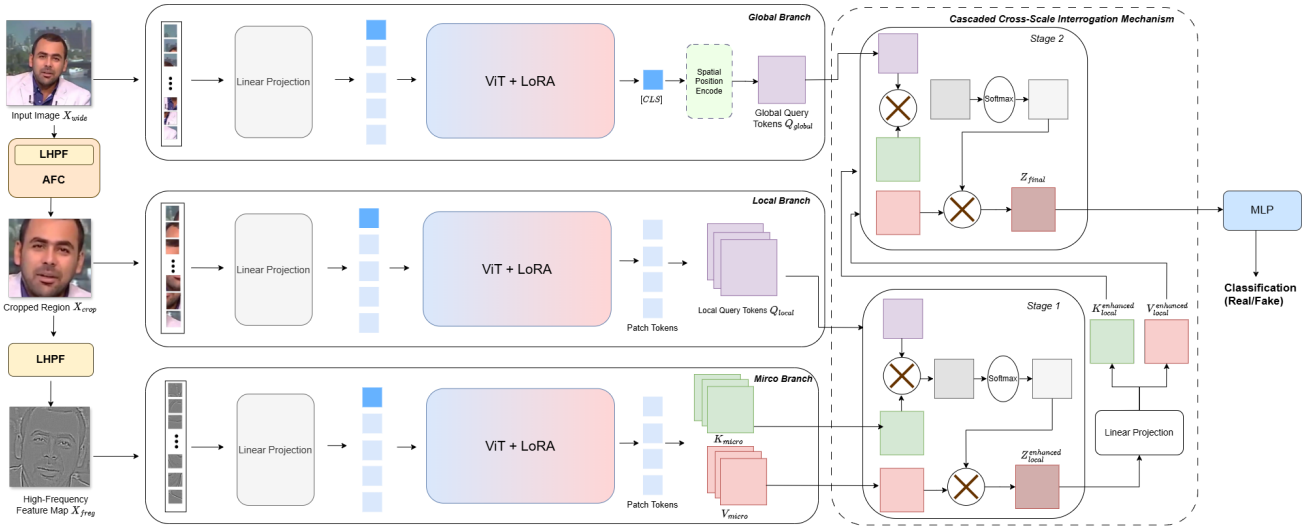

Figure 2. **The overall architecture of GranIT.** The framework extracts three levels of evidence: (1) global context from the wide-crop image (X_{wide}), (2) local facial features isolated via Adaptive Face Cropping (X_{crop}), and (3) micro-artifacts (X_{freq}) revealed by a Spatial High-pass Filter. A shared ViT backbone processes the spatial (RGB) branches, while an independent ViT handles the frequency domain. Finally, the CCSIM hierarchically fuses these representations (Local interrogates Micro, then Global interrogates Enhanced Local) for Real/Fake classification.

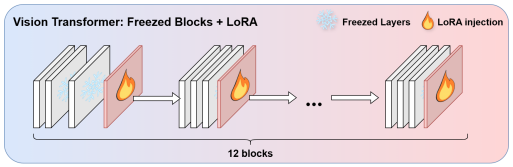

Figure 3. **Detailed architecture of the Vision Transformer (ViT) backbone integrated with Low-Rank Adaptation (LoRA).**

The resulting context-rich image is then resized to a fixed dimension, yielding the input tensor:

$$X_{wide} \in \mathbb{R}^{C \times H \times W}$$

where C, H, and W represent the number of channels, height, and width of the image, respectively. This global input X_{wide} serves as the foundation data for the subsequent global, local branches within the GranIT framework (as shown in **Fig. 2**).

In Deepfake detection, forgery artifacts are often concentrated in local boundary regions such as the eyes, nose, or facial contours. Instead of utilizing static center-crop methods, we propose a AFC module to automatically locate and zoom into suspicious regions in a differentiable manner based on T-STN [13] (as shown in Fig. 4).

Global Branch (G-Branch) - Global Context Representation.

The G-Branch is designed to capture the holistic contextual information of the input image. While many deepfake detection approaches focus primarily on local facial regions, inconsistencies between the face and its surrounding environment often provide important cues for identifying manipulations. These inconsistencies may include mismatched illumination, unnatural pose alignment, or irregular background structures. Therefore, modeling the global context of the image is crucial for reliable deepfake detection.

The input to this branch is a loosely cropped face image X_{wide} with a margin factor of β. Compared to the tightly cropped facial regions used in the local branch, this wider crop preserves additional contextual information such as background content, lighting conditions, and global facial geometry.

After X_{wide} passes through the final layer of the global Vision Transformer backbone, the representation corresponding to the classification token [CLS] is extracted as the base global feature vector Z_{global}. This token aggregates contextual information from all image patches through the self-attention mechanism, effectively summarizing global properties such as illumination patterns, pose consistency, and scene structure.

Crucially, to explicitly inform the global representation about the precise spatial location of the manipulated facial regions extracted by the Local Branch, we introduce the Spatial Position Embedding (SPE) mechanism (Fig. 5). Specifically, the affine transformation parameters θ predicted by the AFC module are flattened and projected into a high-dimensional embedding space via a Multi-Layer Perceptron (MLP) to form the spatial embedding θ_{emb}. This spatial embedding is then added element-wise to the base global token to produce a spatially-aware global represen-

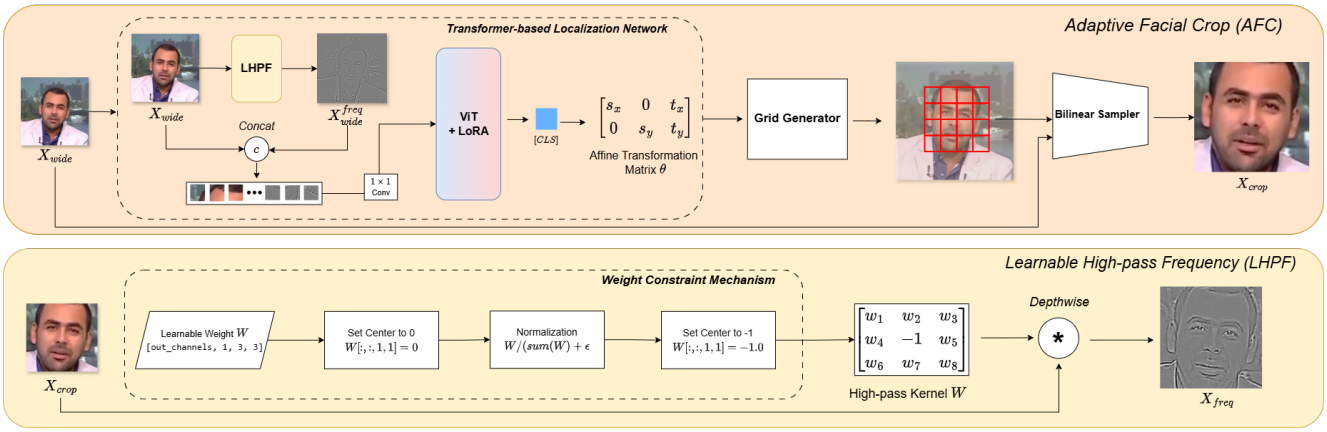

Figure 4. **Detailed architecture of the Adaptive Facial Crop (AFC) and the Learnable High-pass Frequency (LHPF) modules. (Top)** The AFC module takes a wide input image (X_{wide}) and extracts high-frequency features via the LHPF. The RGB and frequency representations are concatenated and passed through a 1×1 convolution for channel fusion. A lightweight Vision Transformer (ViT + LoRA) processes these fused features to predict an affine transformation matrix θ. A grid generator and a bilinear sampler then differentiably crop the focused region (X_{crop}). **(Bottom)** The LHPF module extracts the spatial high-frequency map (X_{freq}) using a depthwise convolution. Instead of a fixed Laplacian filter, it employs a learnable 3×3 kernel W governed by a Weight Constraint Mechanism. This mechanism enforces the center weight to be -1.0 and normalizes the surrounding weights, ensuring the kernel functions as a dynamic high-pass filter that adaptively captures forgery-specific frequency artifacts.

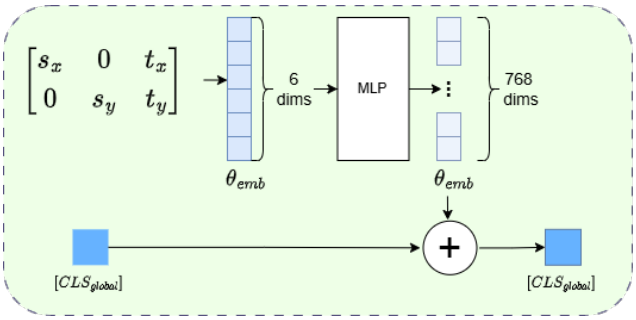

Figure 5. **Illustration of the Spatial Position Embedding mechanism.** The affine transformation parameters (s_x, s_y, t_x, t_y) from the localization matrix θ are flattened into a 6-dimensional vector. This vector is then projected into a 768-dimensional embedding space via a Multi-Layer Perceptron (MLP). The resulting spatial embedding θ_{emb} is added element-wise to the global class token $[CLS_{global}]$, explicitly injecting spatial crop awareness into the global representation prior to the cross-scale interrogation phase.

tation:

$$Z_{global_aware} = Z_{global} \oplus \theta_{emb} \tag{3}$$

In the subsequent Cascaded Cross-Scale Interrogation Mechanism (CCSIM), it is the spatially-aware global representation Z_{global_aware} that serves as the query Q_{global} interacting with token representations from the local and micro branches. This design empowers the model to not only evaluate the consistency between facial details and the surrounding context, but to do so with precise awareness of where those facial details are spatially anchored within the holistic scene.

Local Branch (L-Branch) - Adaptive Facial Crop and Local Feature Extraction.

To precisely locate and isolate manipulated regions, we introduce the Adaptive Facial Crop (AFC) module. Unlike standard spatial cropping techniques, our AFC leverages both RGB and high-frequency clues. Specifically, the wide input image X_{wide} and its corresponding high-frequency map X_{wide}^{freq} (extracted via the LHPF module) are concatenated and fused through a 1×1 convolution. This frequency-aware representation is then fed into a Transformer-based Localization Network (a ViT equipped with LoRA) to predict the affine transformation matrix θ:

$$\theta = \begin{bmatrix} s_x & 0 & t_x \\ 0 & s_y & t_y \end{bmatrix}$$

Here, s_x and s_y denote the scale factors, while t_x and t_y represent the translation parameters.

To ensure that this process remains end-to-end differentiable, we employ a grid generator and a bilinear sampler. The output pixel at coordinates (x_i^t, y_i^t) on the cropped image X_{crop} is mapped back to the source image X_{wide} via the following equation:

$$\begin{pmatrix} x_i^s \\ y_i^s \end{pmatrix} = \begin{bmatrix} s_x & 0 & t_x \\ 0 & s_y & t_y \end{bmatrix} \begin{pmatrix} x_i^t \\ y_i^t \\ 1 \end{pmatrix} \tag{4}$$

Thanks to this differentiable interpolation mechanism, the AFC can autonomously adjust the cropping coordinates

driven by the final classification loss 12, effectively focusing on forgery-rich boundaries without requiring explicit bounding box annotations. Specifically, the localization parameters are optimized jointly with the main network using the final Cross-Entropy classification loss, propagated backward through the differentiable sampling grid and the explicit coordinate projection. Subsequently, the cropped region X_{crop} is passed through the L-Branch including the ViT-LoRA backbone to extract a sequence of fine-grained local patch tokens acting as Q_{local}.

Micro Branch (M-Branch) - High-Frequency Analysis. Generative models (e.g., GANs [9], Diffusion models) frequently leave periodic noise traces in the high-frequency spectrum due to the up-sampling process. However, directly applying the Fast Fourier Transform (FFT) to extract the magnitude spectrum eradicates the spatial layout, significantly hindering the patch-to-patch matching mechanism inherent in Vision Transformers.

To address this limitation, we propose extracting high-frequency micro-artifacts directly within the spatial domain (Spatial High-Frequency). Instead of relying on fixed manual filters inspired by the Spatial Rich Model (SRM) (e.g., the standard 3×3 Laplacian filter), the cropped image X_{crop} is convolved with a Learnable High-Pass Filter (LHPF) kernel W, governed by a Weight Constraint Mechanism (Fig. 4).

$$W = \begin{bmatrix} w_1 & w_2 & w_3 \\ w_4 & -1 & w_5 \\ w_6 & w_7 & w_8 \end{bmatrix} \tag{5}$$

During training, the Weight Constraint Mechanism strictly enforces the central weight of W to be -1.0, while the surrounding weights are normalized such that their sum equals 1.0:

$$w_1 + w_2 + ... + w_8 = 1 \tag{6}$$

The spatial high-frequency feature map X_{freq} is computed as:

$$X_{freq} = X_{crop} * W \tag{7}$$

where $*$ denotes the depthwise 2D convolution operator. This dynamic operation 5 effectively suppresses flat color regions (low-frequency components) and adaptively amplifies edges, structural discontinuities, and forgery-specific noise traces (high-frequency components). Crucially, X_{freq} perfectly preserves the spatial structure of X_{crop}, ensuring a strict 1:1 coordinate correspondence between the patches of the frequency branch and the RGB branch. Finally, X_{freq} is processed by an independent ViT backbone to generate the micro-frequency features from key and value patch tokens K_{micro} and V_{micro}.

3.2.3. Cascaded Cross-Scale Interrogation Mechanism

To effectively aggregate the multi-granularity evidence extracted from the three distinct branches, we propose CC-SIM. Unlike conventional fusion methods that passively aggregate features, our approach formulates cross-scale interaction as an explicit verification process, where one representation actively queries and validates another. This enables the model to detect inconsistencies rather than merely combining information.

The core of this mechanism is the Multi-Head Cross-Attention (MCA) operation, mathematically formulated as:

$$MCA(Q, K, V) = \text{Softmax}\left(\frac{QK^T}{\sqrt{d_k}}\right)V \tag{8}$$

where Q, K, and V represent the Query, Key, and Value matrices respectively, and d_k is the scaling factor corresponding to the embedding dimension. The interrogation process operates in two sequential stages:

Stage 1: Spatial-Frequency Alignment (Local Interrogates Micro)
Since the high-frequency micro-artifacts X_{freq} are directly derived from the cropped local region X_{crop}, it is geometrically and semantically imperative to fuse them first.

$$Z_{local}^{enhanced} = MCA(Q_{local}, K_{micro}, V_{micro}) + Q_{local} \tag{9}$$

where the local spatial patch tokens act as the Query Q_{local}, while the micro-frequency patch tokens serve as the Key and Value (K_{micro}, V_{micro}). This operation yields frequency-aware local features $Z_{local}^{enhanced}$, effectively augmenting the spatial boundaries with microscopic forgery clues while maintaining strict spatial correspondence.

Stage 2: Global Decision Making (Global Interrogates Enhanced Local)
In the final stage, the global branch leverages its comprehensive view of the entire image to scrutinize the augmented local evidence. The global `[CLS]` token acts as the overarching Query Q_{global}. Meanwhile, the frequency-aware local features $Z_{local}^{enhanced}$ are linearly projected into separate Key and Value spaces via learnable weight matrices W_K and W_V:

$$\begin{aligned} K_{enhanced} &= Z_{local}^{enhanced} W_K \\ V_{enhanced} &= Z_{local}^{enhanced} W_V \end{aligned} \tag{10}$$

Subsequently, the cross-attention mechanism is applied to interrogate the enhanced local tokens:

$$Z_{final} = MCA(Q_{global}, K_{enhanced}, V_{enhanced}) + Q_{global} \tag{11}$$

This hierarchical interrogation ensures that the global context dynamically assigns higher attention weights to the most discriminative local regions—whether the forgery artifacts manifest as visual inconsistencies (captured by the

RGB Local branch) or spectral anomalies (captured by the SRM frequency branch). Finally, the fused representation Z_{final} is fed into a Multi-Layer Perceptron (MLP) head to output the final binary classification prediction (Real/Fake).

3.2.4. Objective Function

To train the GranIT framework in an end-to-end manner, we optimize a composite objective function. We employ the standard Cross-Entropy Loss to optimize the ground-truth label predictions (Real/Fake):

$$\mathcal{L}_{CE} = -\frac{1}{N}\sum_{i=1}^{N}\left[y_i \log(\hat{y}_i) + (1-y_i)\log(1-\hat{y}_i)\right] \quad (12)$$

where y_i is the ground-truth label and $\hat{y}_i$ is the predicted probability.

Scale Regularization Loss: To prevent the AFC from excessive zooming (collapsing to a single pixel) or failing to zoom (retaining the original image), we constrain the scale factors s_x, s_y within an ideal range $[s_{min}, s_{max}]$:

$$\begin{aligned}\mathcal{L}_{scale} = &\max(0, s_{min} - s_x) + \max(0, s_x - s_{max}) \\ &+ \max(0, s_{min} - s_y) + \max(0, s_y - s_{max})\end{aligned} \quad (13)$$

Translation Regularization Loss: To prevent the AFC from shifting the cropping frame outside the image boundaries, the center coordinates t_x, t_y are regularized using an L2 penalty, encouraging the crop to remain near the facial center:

$$\mathcal{L}_{trans} = t_x^2 + t_y^2 \quad (14)$$

The total loss $\mathcal{L}_{total}$ is defined as follows:

$$\mathcal{L}_{total} = \mathcal{L}_{CE} + \lambda_{scale}\mathcal{L}_{scale} + \lambda_{trans}\mathcal{L}_{trans} \quad (15)$$

The hyperparameters λ_{scale} and λ_{trans} are tuned to strike a balance between localization freedom and training stability.

4. Experiments

4.1. Evaluation Setting

4.1.1. Datasets

To evaluate the generalizability and robustness of our proposed GranIT and other state-of-the-art baselines, we conduct extensive experiments on multiple deepfake datasets. Specifically, we utilize FaceForensics++ c23 (FF++) [23] as the primary source dataset for training. For comprehensive cross-dataset inference, we evaluate the models on four well-known benchmarks: FaceForensics++ (FF++) [23], Celeb-DF [15], WildDeepfake (Wild-DF) [32], and the Deepfake Detection Challenge (DFDC) [6].

FF++ is widely used due to its diversity in forgery techniques. It contains 1,000 pristine videos and 4,000 deepfake videos generated using four distinct manipulation methods (Deepfakes, Face2Face, FaceSwap, and NeuralTextures). Designed to address the visual artifact issues present in earlier datasets, Celeb-DF comprises 590 real videos of celebrities and 5,639 high-quality fake videos. Wild-DF contains 707 real and 7,314 fake videos collected entirely from the internet, which constructed to reflect real-world scenarios. One of the most comprehensive large-scale benchmarks, DFDC consists of over 100,000 videos. It features diverse subjects, varied lighting conditions, and extreme poses. Due to the large compression of DFDC, we take smaller fragments for testing convenience.

These datasets encompass a wide range of manipulation techniques, visual qualities, and real-world degradation, thereby providing a rigorous testbed for evaluating model performance in the wild.

4.1.2. Implementation Details

The proposed framework is implemented using the PyTorch framework and trained on a single NVIDIA GeForce RTX 3090 GPU. For the shared Vision Transformer backbone, we utilize a pre-trained ViT-Base architecture initialized with weights from LAION-2B (`vit_base_patch16_clip_224.laion2b`). To minimize computational overhead and prevent catastrophic forgetting, the ViT backbone is frozen, and we integrate LoRA [12] into the attention blocks with a rank $r = 4$ and a scaling factor $\alpha = 16$.

All input face images are initially loosely cropped with a margin factor of $\beta = 1.5$ and resized to $C \times H \times W = 3 \times 224 \times 224$ pixels before being fed into the network. For the AFC module, the ideal scale range is constrained within $[s_{min}, s_{max}] = [0.4, 0.9]$. In the Micro Branch, instead of utilizing a fixed manual filter, we initialize a learnable 3×3 high-pass filter. Consistent with our methodology, its weights are dynamically constrained during training such that the center weight remains -1.0 and the surrounding weights normalize to a sum of 1.0.

During the training phase, the model is optimized end-to-end for 25 epochs using the AdamW optimizer with a weight decay of 0.05. The batch size is configured to 64. The initial learning rate is set to 1×10^{-4}. The hyperparameters for the AFC objective function are empirically set to $\lambda_{scale} = 0.1$ and $\lambda_{trans} = 0.1$ to balance localization flexibility and training stability. Smaller values allow adaptive cropping, while larger values overly constrain the transformation.

4.1.3. Evaluation Metrics

To evaluate and ensure fairness across the performance of our proposed framework, we primarily employ the Area Under the Receiver Operating Characteristic Curve (AUC). Deepfake detection datasets often exhibit varying degrees of class imbalance between pristine and manipulated media.

Table 1. **Cross-dataset evaluation.** Comparison with state-of-the-art models in terms of AUC (%) on four manipulated datasets.

Model	FF++	Celeb-DF	DFDC	Wild-DF	**Avg**
Xception [4]	94.75	80.51	55.97	70.34	75.39
EfficientNetB4 [24]	86.11	75.92	58.64	59.34	70.00
ResNet50 [11]	91.74	75.16	55.42	59.47	70.45
GranIT v1	94.30	85.83	75.16	61.76	79.26
GranIT v2 (ours)	**96.08**	**86.75**	**76.10**	**71.64**	**82.65**

Model	FF++	DFDC	Celeb-DF	Wild-DF	Avg
o/l G-Branch	96.05	**71.63**	83.53	68.99	80.05
o/l L-Branch	96.03	70.78	86.62	69.74	80.79
o/l M-Branch	93.18	53.20	77.80	51.99	69.04
w/o G-Branch	96.16	68.70	84.58	**70.03**	79.87
w/o M-Branch	**96.17**	71.09	**86.77**	67.96	**80.50**

Table 2. **Effect of branch architectures.** Ablation study evaluating the individual contributions of the Global (G), Local (L), and Micro (M) branches. *o/l* denotes training 'only' a specific branch, while *w/o* denotes 'without' that branch. Performance is measured in AUC (%).

Model Configuration	FF++	DFDC	Celeb-DF	Wild-DF	Avg
Baseline (Fixed Laplacian, RGB-only AFC)	96.56	67.58	85.60	64.51	78.56
+ Learnable High-Pass Filter (LHPF)	96.60	69.68	86.27	64.68	79.31
+ LHPF Guidance for AFC	95.89	**72.88**	**88.96**	72.23	**82.49**
+ Spatial Position Embedding (SPE)	**96.63**	69.92	86.95	**74.19**	81.92

Table 3. **Effect of proposed modules.** Progressive ablation study evaluating the impact of the Learnable High-Pass Filter (LHPF), the integration of LHPF guidance into the AFC, and Spatial Position Embedding (SPE). Performance is measured in AUC (%).

AUC is highly robust to such imbalances as it provides an aggregate measure of performance across all possible classification thresholds, making it more reliable than standard accuracy.

4.2. Results

4.2.1. Generalization on Cross-Datasets

Table 1 presents the cross-dataset evaluation results, comparing our proposed framework against widely used state-of-the-art baselines. To ensure a fair comparison, all models were trained exclusively on the FF++ dataset and evaluated on Celeb-DF, DFDC, and Wild-DF without any fine-tuning.

Overall, the fully equipped GranIT v2 demonstrates superior generalization capabilities, achieving the highest average AUC of 82.65%. Notably, on the highly compressed and challenging DFDC dataset, GranIT v2 establishes a massive performance gap, exceeding the best baseline by over 17% (76.10% vs. EfficientNetB4's 58.64%).

More importantly, the inclusion of GranIT v1 (our baseline architecture utilizing a fixed Laplacian filter, lacking SPE and solely RGB-based AFC) clearly illustrates the effectiveness of our proposed modules. As shown in Table 1, GranIT v1 struggled on the heavily degraded Wild-DF dataset, scoring only 61.76% (lower than Xception's 70.34%). This indicates that fixed frequency filters easily fail when facing uncontrolled, real-world noise. However, by introducing LHPF and SPE mechanism, GranIT v2 successfully overcomes this bottleneck, boosting the Wild-DF performance to 71.64% and reclaiming the top position. This confirms that dynamically learning frequency constraints and spatially anchoring them to global contexts is the key to achieving robust, cross-domain deepfake detection.

4.2.2. Ablation Study

Effect of Branch Architectures. To thoroughly understand the contribution of each spatial and frequency pathway, we conducted an ablation study evaluating the isolated performance of each branch as well as leave-one-out configurations (Table 2). Notably, we omit the "*w/o* L-Branch" setting because the Local and Micro branches are structurally interdependent; removing the L-Branch would inherently dismantle the M-Branch's localization prerequisite.

The results reveal a distinct performance trade-off related to the M-Branch. When evaluated independently, the spatial branches exhibit the robustness across domains (*o/l* L-Branch achieves an average AUC of 80.79%). In contrast, the isolated M-Branch performs poorly on unseen datasets, dropping to 53.20% on DFDC and 51.99% on Wild-DF. This phenomenon points to a domain shift vulnerability: high-frequency noise and synthesis artifacts are highly specific to the source training data (FF++). When exposed to unseen datasets with entirely different compression pipelines, these micro-level frequency features become distorted. Consequently, merely relying on fixed frequency artifacts can hinder cross-domain generalization, creating the need for a more adaptive filtering and fusion mechanism.

Effect of Components Enhancements (GranIT v2). To overcome the aforementioned frequency vulnerability, we

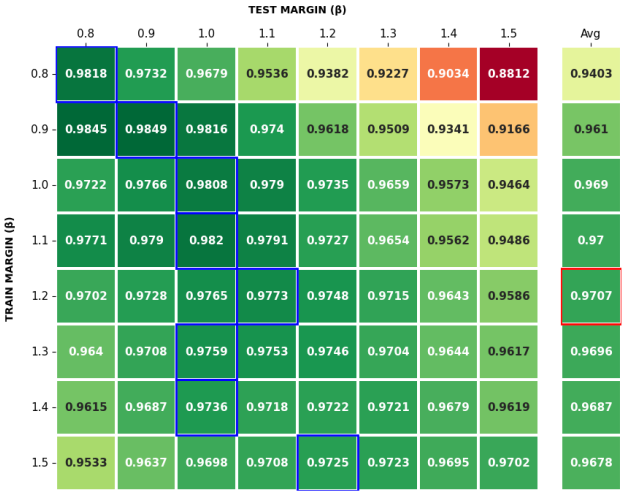

Figure 6. **Cross-margin evaluation matrix.** This demonstration displays the AUC scores across different training and testing margins (β). The blue boxes highlight the optimal testing margin for each specific training margin. The red box indicates the highest average AUC (97.07%) across all test scenarios, achieved when the model is trained with $\beta = 1.2$.

progressively integrated our novel components into a baseline model (which uses a fixed Laplacian filter and standard RGB-based cropping). As shown in Table 3, each module explicitly targets a specific bottleneck.

First, replacing the fixed filter with LHPF improves the overall average AUC to 79.31%, demonstrating that adaptively constrained weights capture cross-dataset forgery traces better than static mathematical filters.

Second, integrating the frequency maps to guide the localization network in AFC yields a massive performance leap. The average AUC jumps to 82.49%, with remarkable improvements on heavily compressed datasets like DFDC (from 69.68% to 72.88%) and Wild-DF (from 64.68% to 72.23%). This proves that utilizing high-frequency anomalies to govern the cropping coordinates ensures the model focuses strictly on forgery-rich boundaries rather than arbitrary facial features.

Finally, the addition of SPE exhibits a nuanced but critical impact. While the overall average stabilizes at 81.92%, SPE pushes the performance on the extremely challenging Wild-DF dataset to its absolute peak (74.19%). By explicitly injecting spatial coordinate awareness into the global representation, the model can cross-reference local manipulated patches with their exact global surroundings, making it highly resilient against real-world, uncontrolled internet videos.

Effect of Face-crop Margins. As we discussed, the performance of the models partly relies on the ratio of face cropping. With tight-face cropping, although the model can

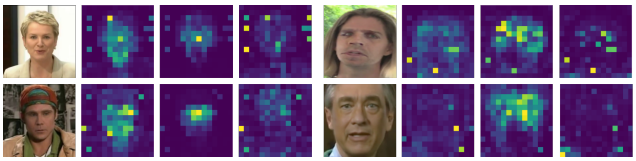

Figure 7. **Visualization of GranIT attention maps.** We visualize the self-attention weights from the `[CLS]` token at the final layer of the spatial ViT backbone. The figure displays representative deepfake samples and their corresponding multi-head attention activations across four benchmark datasets: FF++, Celeb-DF, DFDC, and Wild-DF.

easily focus on the whole face, there are some cases that the forgery artifacts stay on the boundaries (e.g., cheek, jaw). With wide-face cropping, including the context matching with face or not, in which models can capture all of the manipulated cues. Nevertheless, with wider crop, the models are prone to having bias (i.e., overfitting) in context (e.g., hair, background). We evaluate on different scales of margin β ranging from 0.8 to 1.5 during both the training and testing phases. As illustrated in Figure 6, our empirical results clearly demonstrate the impact of cropping strategies on model robustness.

Models trained with extremely tight crops (e.g., $\beta = 0.8$-1.0) exhibit high AUC on similar test distributions but suffer severe performance degradation when tested on wider crops, with the AUC dropping significantly to 0.8812 at test $\beta = 1.5$. This confirms our hypothesis that overly restricted inputs fail to capture necessary boundary artifacts. Conversely, while expanding the margin helps preserve context, excessively wide training crops (e.g., $\beta = 1.4$ or 1.5) yield lower overall peak performance. This indicates that the models might be overfitting to background noise or irrelevant contexts rather than focusing on core facial manipulation cues.

The optimal balance is observed at a training margin β ranging from 1.1 to 1.2, which achieves the highest average AUC of 97.0% across all testing scales. This spot provides sufficient coverage of facial boundaries and contextual information without introducing excessive background distraction, thereby yielding the most robust generalization capability for Deepfake detection.

Attention Map Visualization. To provide a deeper insight into our architecture, we visualize the attention heatmaps generated by the final layer of the spatial Vision Transformer. As illustrated in Figure 7, we evaluate the model's focal behavior across four distinct test datasets, ranging from high-quality forgeries (Celeb-DF) to heavily compressed and uncontrolled internet videos (DFDC and Wild-DF).

The heatmaps clearly demonstrate that GranIT possesses a highly robust and consistent spatial awareness. Across all

Model	DFDC	Celeb-DF	Wild-DF
o/l M-Branch	50.41	79.65	63.27
w/o G-Branch	70.99	85.96	66.51
w/o M-Branch	72.85	**87.98**	**72.85**
GranIT (v1)	**75.16**	85.83	61.76

Table 4. **Effect of the old method (GranIT v1).** Ablation study evaluating the individual contributions of M-branch as well as the removal of G- and M-Branch. Performance is measured in AUC (%). *o/l* denotes 'only', *w/o* denotes 'without'

varying compression levels and manipulation techniques, the model's attention (indicated by the bright yellow and green activations) is tightly concentrated on critical facial regions, completely ignoring irrelevant background contexts or arbitrary noise. Specifically, the attention heads actively target forgery-rich areas such as the central facial features (eyes, nose, mouth) and the blending boundaries (jawlines and facial contours).

This precise localization serves as a qualitative evidence validating the effectiveness of our proposed framework. It proves that by synergizing the global context with high-frequency guidance via the AFC and CCSIM , the model autonomously learns to isolate and interrogate the exact regions where manipulation traces most frequently occur. This focal precision is the key driver behind GranIT's superior cross-domain generalization capabilities.

5. Discussion and Limitations

Developing the GranIT framework revealed several critical challenges inherent to cross-domain deepfake detection, particularly concerning the fusion of spatial and frequency modalities.

Overcoming Domain Shift in M-Branch. Another significant obstacle was the phenomenon of negative transfer caused by fixed frequency filters, which is empirically demonstrated in Table 4. In our initial architecture (GranIT v1), the use of a static Laplacian kernel resulted in severe overfitting to the compression profiles of the training dataset. As shown in the table, while the full GranIT v1 achieved decent results on DFDC, it suffered a severe degradation on the highly uncontrolled Wild-DF dataset (scoring only 61.76%). Paradoxically, when the Micro Branch was entirely removed (*w/o* M-Branch), the model's cross-domain performance experienced a significant surge, reaching 87.98% on Celeb-DF and 72.85% on Wild-DF. Furthermore, the isolated M-Branch (*o/l* M-Branch) performed exceptionally poorly on unseen data, dropping to 50.41% on DFDC.

This anomaly confirmed that the fixed kernel extracted heavily corrupted noise when exposed to the multi-generational compression of real-world internet videos. Consequently, feeding these distorted micro-features into the cross-attention mechanism actively confused the model, degrading the reliable spatial cues captured by the other branches. This critical finding drove the evolution to a dynamically constrained Learnable High-Pass Filter (LHPF) in v2, allowing the network to adaptively target forgery-specific anomalies rather than blindly amplifying universal noise.

Limitations and Future Work. Despite the generalization capabilities of GranIT v2, the framework is not without limitations. The cascaded extraction of holistic contexts, focused crops, and micro-frequencies inherently increases the computational overhead during inference compared to single-branch networks like EfficientNet. We also notice that tight-crop face datasets can degrade our performance, this suggests that there is not context-scenario enough for GranIT to capture the inconsistencies between the face and surrounding contents. Future work will focus on optimizing the architectural efficiency using knowledge distillation and extending the interrogation mechanism to handle temporal consistencies in video-level deepfakes instead of purely experimenting on frame-level samples.

6. Conclusion

In this paper, we presented GranIT, a comprehensive multi-granularity Transformer framework that pushes the boundaries of cross-domain deepfake detection. By addressing the inherent limitations of isolated spatial and frequency-based approaches, GranIT establishes a highly robust architecture capable of uncovering sophisticated forgeries in the wild. Our key innovation lies in resolving the frequency-spatial alignment bottleneck through the introduction of the LHPF and the Frequency-Guided AFC. These modules allow the network to dynamically hunt for manipulation boundaries and adaptively extract micro-artifacts without destroying the spatial layout. Furthermore, by explicitly integrating SPE into CCSIM, we substantially mitigated the domain shift and negative transfer issues that typically plague models on heavily degraded datasets like Wild-Deepfake. Extensive ablation studies and cross-dataset evaluations confirm that GranIT not only achieves superior performance but also demonstrates exceptional resilience against multi-generational video compression and uncontrolled real-world noise. While challenges regarding computational overhead and purely synthetic AI-generated faces remain, GranIT provides a solid, interpretable foundation for the next generation of robust digital forensics.

References

[1] From Specificity to Generality: Revisiting Generalizable Artifacts in Detecting Face Deepfakes. 3

[2] Renwang Chen, Xuanhong Chen, Bingbing Ni, and Yanhao Ge. Simswap: An efficient framework for high fidelity face swapping. In *Proceedings of the 28th ACM International Conference on Multimedia*, page 2003–2011. ACM, 2020. 2

[3] Bobby Chesney and Danielle Keats Citron. Deep fakes: A looming challenge for privacy, democracy, and national security. *California Law Review*, 107:1753, 2019. 1

[4] François Chollet. Xception: Deep learning with depthwise separable convolutions, 2017. 2, 8

[5] Andrea Ciamarra, Roberto Caldelli, Federico Becattini, Lorenzo Seidenari, and Alberto Del Bimbo. Deepfake detection by exploiting surface anomalies: the surfake approach, 2024. 2

[6] Brian Dolhansky, Russ Howes, Ben Pflaum, Nicole Baram, and Cristian Canton Ferrer. The deepfake detection challenge (dfdc) preview dataset, 2019. 7

[7] Alexey Dosovitskiy, Lucas Beyer, Alexander Kolesnikov, Dirk Weissenborn, Xiaohua Zhai, Thomas Unterthiner, Mostafa Dehghani, Matthias Minderer, Georg Heigold, Sylvain Gelly, Jakob Uszkoreit, and Neil Houlsby. An Image is Worth 16x16 Words: Transformers for Image Recognition at Scale, 2021. arXiv:2010.11929 [cs]. 1, 2, 3

[8] Xinghe Fu, Zhiyuan Yan, Taiping Yao, Shen Chen, and Xi Li. Exploring unbiased deepfake detection via token-level shuffling and mixing, 2025. 2

[9] Ian J. Goodfellow, Jean Pouget-Abadie, Mehdi Mirza, Bing Xu, David Warde-Farley, Sherjil Ozair, Aaron Courville, and Yoshua Bengio. Generative Adversarial Networks, 2014. arXiv:1406.2661 [stat]. 1, 6

[10] Alexandros Haliassos, Konstantinos Vougioukas, Stavros Petridis, and Maja Pantic. Lips don't lie: A generalisable and robust approach to face forgery detection, 2021. 2

[11] Kaiming He, Xiangyu Zhang, Shaoqing Ren, and Jian Sun. Deep residual learning for image recognition, 2015. 8

[12] Edward J. Hu, Yelong Shen, Phillip Wallis, Zeyuan Allen-Zhu, Yuanzhi Li, Shean Wang, Lu Wang, and Weizhu Chen. Lora: Low-rank adaptation of large language models, 2021. 3, 7

[13] Max Jaderberg, Karen Simonyan, Andrew Zisserman, and Koray Kavukcuoglu. Spatial transformer networks, 2016. 4

[14] Yonghyun Jeong, Doyeon Kim, Seungjai Min, Seongho Joe, Youngjune Gwon, and Jongwon Choi. Bihpf: Bilateral high-pass filters for robust deepfake detection, 2021. 3

[15] Yuezun Li, Xin Yang, Pu Sun, Honggang Qi, and Siwei Lyu. Celeb-DF: A Large-Scale Challenging Dataset for DeepFake Forensics. In *2020 IEEE/CVF Conference on Computer Vision and Pattern Recognition (CVPR)*, pages 3204–3213, 2020. ISSN: 2575-7075. 1, 2, 7

[16] Ziqiang Li, Jiazhen Yan, Ziwen He, Kai Zeng, Weiwei Jiang, Lizhi Xiong, and Zhangjie Fu. Is artificial intelligence generated image detection a solved problem?, 2025. 2

[17] Luca Maiano, Lorenzo Papa, Ketbjano Vocaj, and Irene Amerini. DepthFake: a depth-based strategy for detecting Deepfake videos, 2022. 2

[18] Marek. Faceswap. In *FaceSwap*. 2

[19] Yunsheng Ni, Depu Meng, Changqian Yu, Chengbin Quan, Dongchun Ren, and Youjian Zhao. CORE: Consistent Representation Learning for Face Forgery Detection, 2022. 2

[20] Yuval Nirkin, Lior Wolf, Yosi Keller, and Tal Hassner. Deepfake detection based on the discrepancy between the face and its context, 2020. 2

[21] Keiron O'Shea and Ryan Nash. An introduction to convolutional neural networks, 2015. 1, 2

[22] Yuyang Qian, Guojun Yin, Lu Sheng, Zixuan Chen, and Jing Shao. Thinking in Frequency: Face Forgery Detection by Mining Frequency-aware Clues, 2020. arXiv:2007.09355 [cs]. 3

[23] Andreas Rössler, Davide Cozzolino, Luisa Verdoliva, Christian Riess, Justus Thies, and Matthias Nießner. FaceForensics: A Large-scale Video Dataset for Forgery Detection in Human Faces, 2018. arXiv:1803.09179 [cs]. 1, 2, 7

[24] Mingxing Tan and Quoc V. Le. Efficientnet: Rethinking model scaling for convolutional neural networks, 2020. 2, 8

[25] Justus Thies, Michael Zollhöfer, Marc Stamminger, Christian Theobalt, and Matthias Nießner. Face2Face: Real-time Face Capture and Reenactment of RGB Videos, 2020. arXiv:2007.14808 [cs]. 1

[26] Bo Wang, Xiaohan Wu, Yeling Tang, Yanyan Ma, Zihao Shan, and Fei Wei. Frequency domain filtered residual network for deepfake detection. *Mathematics*, 11(4), 2023. 2, 3

[27] Bo Wang et al. Deepfake detection based on adaptive fusion of spatial-frequency features. *2024*, 2024. Spatial + Freq fusion. 3

[28] Sheng-Yu Wang, Oliver Wang, Richard Zhang, Andrew Owens, and Alexei A. Efros. CNN-generated images are surprisingly easy to spot... for now, 2020. arXiv:1912.11035 [cs]. 1, 3

[29] Tianyi Wang, Ming Liu, Wei Cao, and Kam Pui Chow. Deepfake noise investigation and detection. *Forensic Science International: Digital Investigation*, 42:301395, 2022. 2

[30] Kaipeng Zhang, Zhanpeng Zhang, Zhifeng Li, and Yu Qiao. Joint face detection and alignment using multitask cascaded convolutional networks. *IEEE Signal Processing Letters*, 23 (10):1499–1503, 2016. 3

[31] Hanqing Zhao, Wenbo Zhou, Dongdong Chen, Tianyi Wei, Weiming Zhang, and Nenghai Yu. Multi-attentional Deepfake Detection, 2021. arXiv:2103.02406 [cs]. 1

[32] Bojia Zi, Minghao Chang, Jingjing Chen, Xingjun Ma, and Yu-Gang Jiang. WildDeepfake: A Challenging Real-World Dataset for Deepfake Detection, 2024. arXiv:2101.01456 [cs]. 1, 7