# LASER CHALLENGE™ V2™

WITH ELS™ ADVANCED SCORING TECHNOLOGY™

**AGES 8 & UP**

- This Toy Does NOT Contain a Real Laser Device.
- Shooting Distance Dependant Upon Weather and Lighting Conditions.

**VISIT US ON THE WEB AT: WWW.LASERCHALLENGE.COM**

# INSTRUCTIONS

You are preparing to engage in the most advance laser play ever...
Laser Challenge™ V2 with ELS™ technology

Your V2 Firestorm blaster is serious gear! With rapid fire, silent mode and maxblasts you've got serious power. But Firestorm can do it all at over ONE THOUSAND FEET - The most insane firepower ever!

**Start Up:** Power your Firestorm Blaster by installing 6 fresh AA size alkaline batteries.

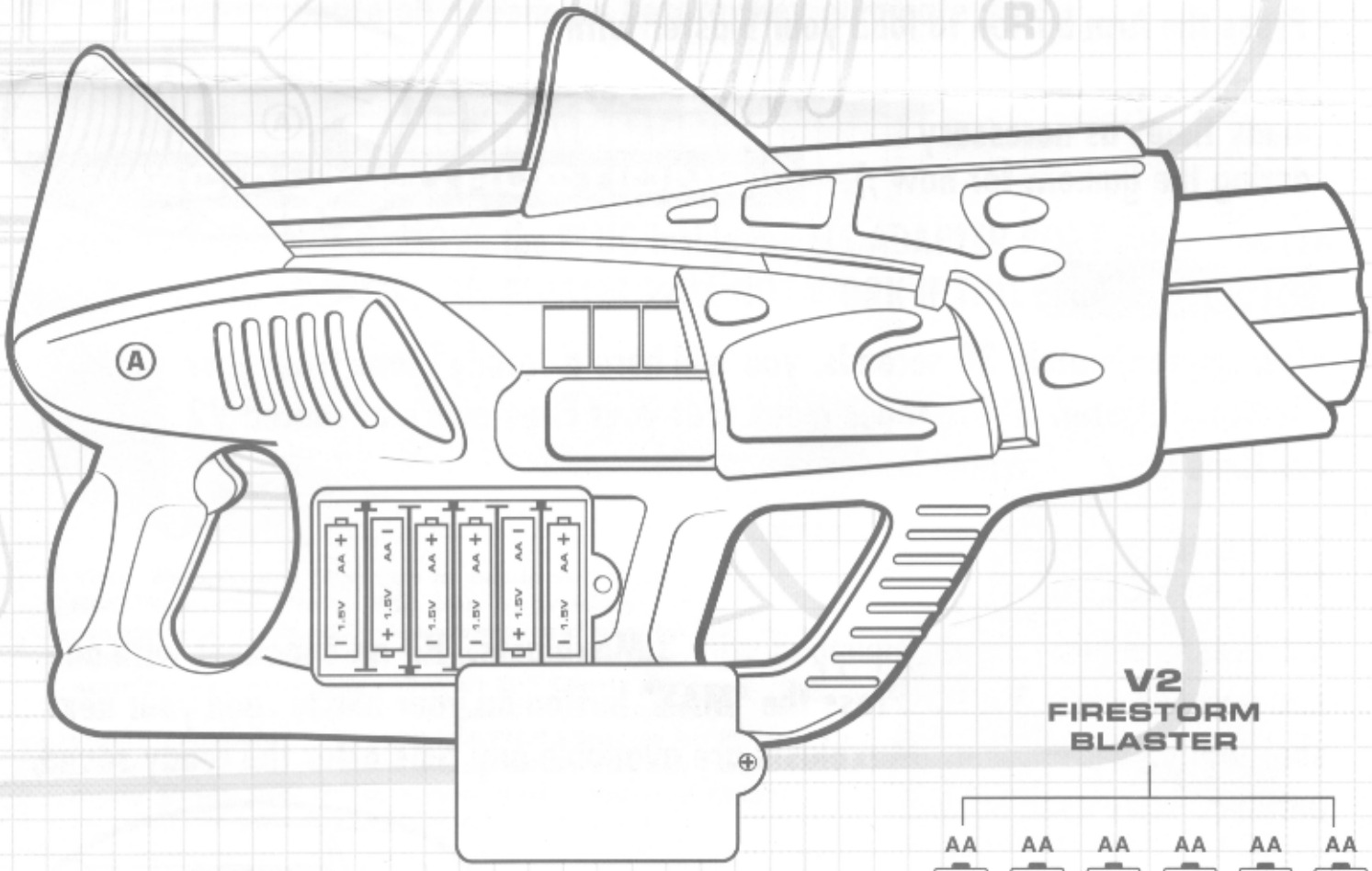

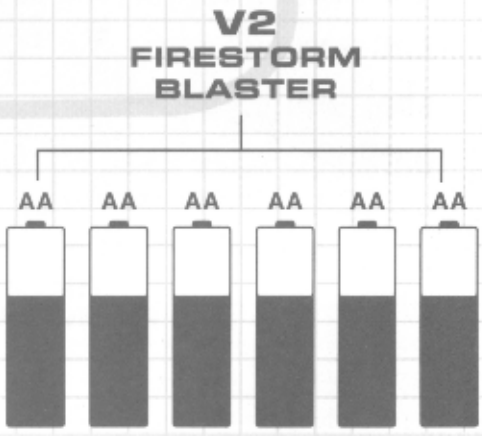

## Suit Up:

Equip all players with integrated front and back sensors and V2 laser blasters or any other Laser Challenge Brand vests.

## Prepare for Play:

- Power up your Firestorm blasters in either silent mode or standard mode.

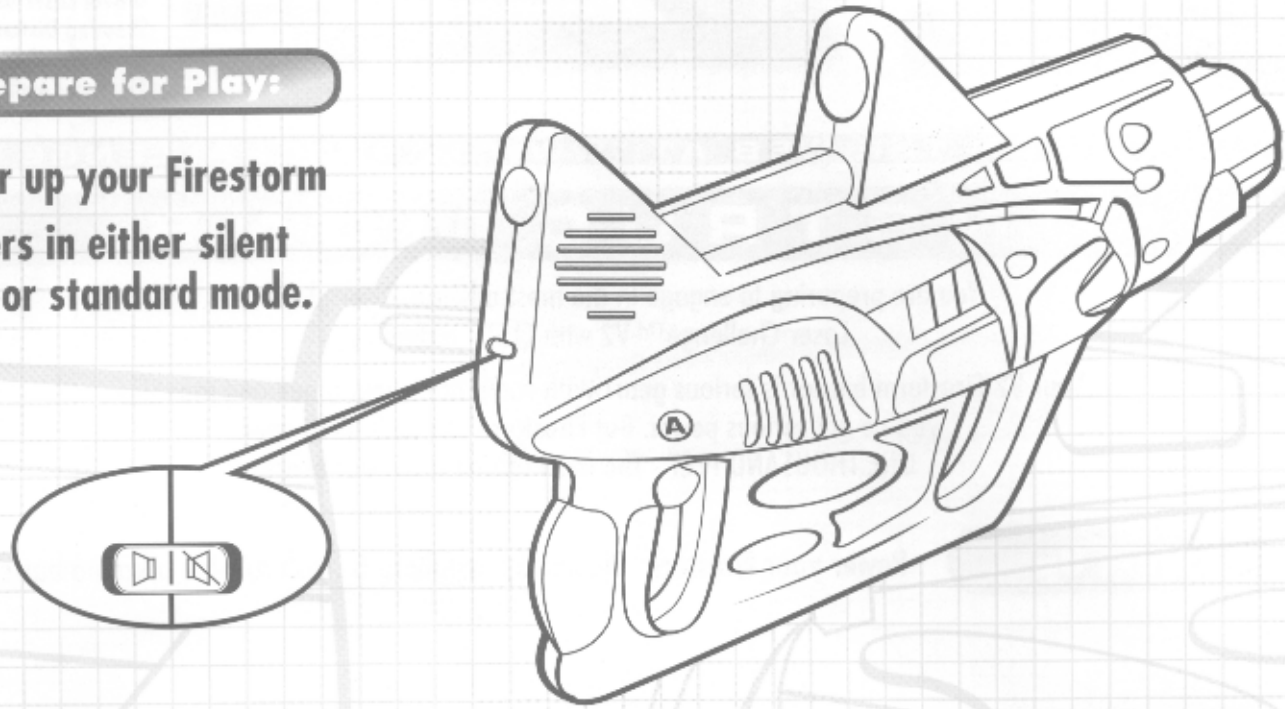

- Press the Arm button to load your blaster with 25 shots. You may re-arm at any point and as many times as necessary during the game... for now ;)

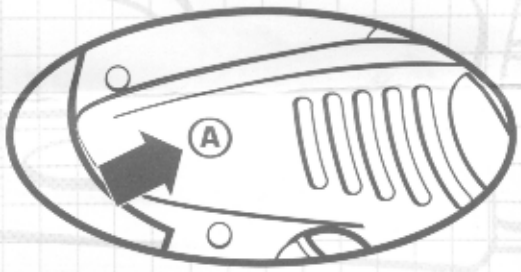

## RUN!

After approximately 30 seconds, you will here a "ready" tone from your Firestorm Blaster. These tones mean that your Firestorm's advanced V2 functions are now available.

## MAXBLAST

V2 Firestorm blasters are equipped with 3 Maxblasts. Hit an opponent with one and you will score 3 hits. Press the "MAX" button on your blaster and your next shot will be a Maxblast. Maxblasts are available any time after the ready sound, until you have used all 3.

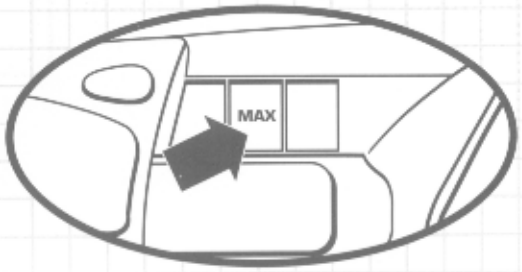

## Firestorm Special Features:

**Simulated Laser Scope:**
When you power up your Firestorm blaster, look down the scope. You will see a red dot in the center of the front scope. This dot will show you exactly where your blasts will land.

Adjust your aim for different distances and learn how your scope works and you'll blast right on target every time!

**Recoil:**
With every blast, the Firestorm blaster will shake with power! The vents on the sides of your blaster will rock back and forth and you will feel the power of the Firestorm blaster!

YOUR GOAL-eliminate all opponents before they eliminate you!
It takes 10 hits to be eliminated.

## SPECIAL INSTRUCTIONS:

Special Note: DO NOT REMOVE the PLUG inside the ELS ADAPTER PORT unless you are installing an ELS ADAPTER. THE BLASTER WILL NOT WORK IF THIS PLUG IS REMOVED.

Your Firestorm Blaster is equipped with an ELS Adapter Port. You can upgrade your equipment with ELS Adapters and the ELS™ Game system to access the most powerful laser game scoring system ever. The ELS™ Game System has the ability to track and record ALL GAME PERFORMANCE INFORMATION for up to 8 different players! It records who hit you, how many times you fired, what your accuracy rating is, who hit you AND MORE!

ALL Laser Challenge™ V2 equipment is capable of playing on the ELS™ Game System.

**ACCEPT NO IMITATIONS OR LIMITATIONS!**
**USE ONLY OFFICIAL LASER CHALLENGE GEAR**

MAX BUTTON

RESET BUTTON
Resets teammates or opponents to prepare for a game

ON/OFF/ SILENT MODE SWITCH

MAX

R

ARM BUTTON
Reloads your blaster with 25 shots

A

TRIGGER
Hold down for rapid fire

ELS ADAPTER PORT
Expansion port for ELS Adapters

ON/OFF/SILENT MODE SWITCH

## Battery Requirements:

FIRESTORM BLASTER = 6 AA Batteries

Fresh batteries will increase your Blaster's range and the sensitivity of all accessories. Should any component malfunction, try replacing batteries. If this does not work, call customer service.

### IMPORTANT! OBSERVE THE FOLLOWING PRECAUTIONS TO PREVENT BATTERY LEAKAGE:

• Ask adult to replace batteries. • Be sure to insert batteries as instructed. Always follow the battery manufacturer's instruction.
• Always use alkaline batteries. • Never mix old and new batteries. Replace batteries at the same time, in pairs.
• Never mix alkaline, standard (carbon-zinc), or rechargeable (nickel cadmium) batteries. • Do not use rechargeable batteries.
• Always remove weak or dead batteries. • Check that the contact surfaces are clean before installing batteries.
• Remove batteries from the battery compartment before extended storage.

**VISIT US ON THE WEB AT: WWW.LASERCHALLENGE.COM**

We're Always Here to Help!We know you are going to enjoy playing with your

LASER CHALLENGE™ V2

If you have any questions or comments, our Customer Service Representatives will be glad to help you.

**Call: 1-800-222-9060**

between 9:00am and 5:00pm EST. Monday through Friday, or write to:

**TOYMAX INC. 125 East Bethpage Road, Plainview, N.Y. 11803**

Please include the following information: Name of Product, Item Number, Sales Receipt, Date of Purchase, Where Purchased and a Brief Description of Problem.

CONFORMS TO ASTM-F963
COLORS & CONTENTS MAY VARY.
© 1998 TOYMAX INC. PLAINVIEW, N.Y. 11803 U.S.A. ALL RIGHTS RESERVED.
TM AND ® DESIGNATE TRADEMARKS OF TOYMAX INC. & TOYMAX (H.K.) LTD.
MADE IN CHINA.
80613T/1

80613

TOYmax®