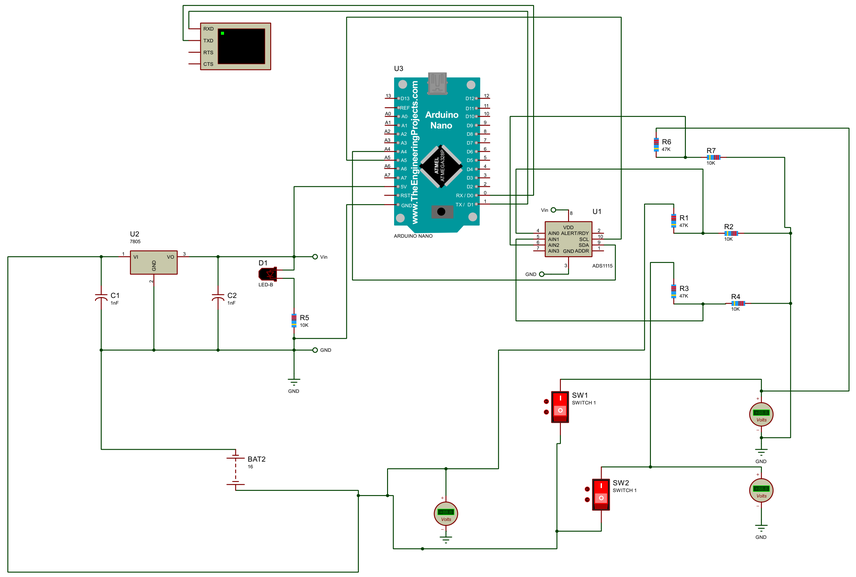


FILE NAME: Chute_Monitoring_and_Battery_Manageme
DESIGN TITLE: Chute_Monitoring_and_Battery_Manageme
PATH: E:\Comp_Stuff\Glenn_s Stuff\Documents\Schools\Arduino\fifth assin
BY: @AUTHOR REV:@REV
BOARD: @BOARD
DATE: 2/4/2026
Sheet 1 of 1
TIME: 11:19:15 PM