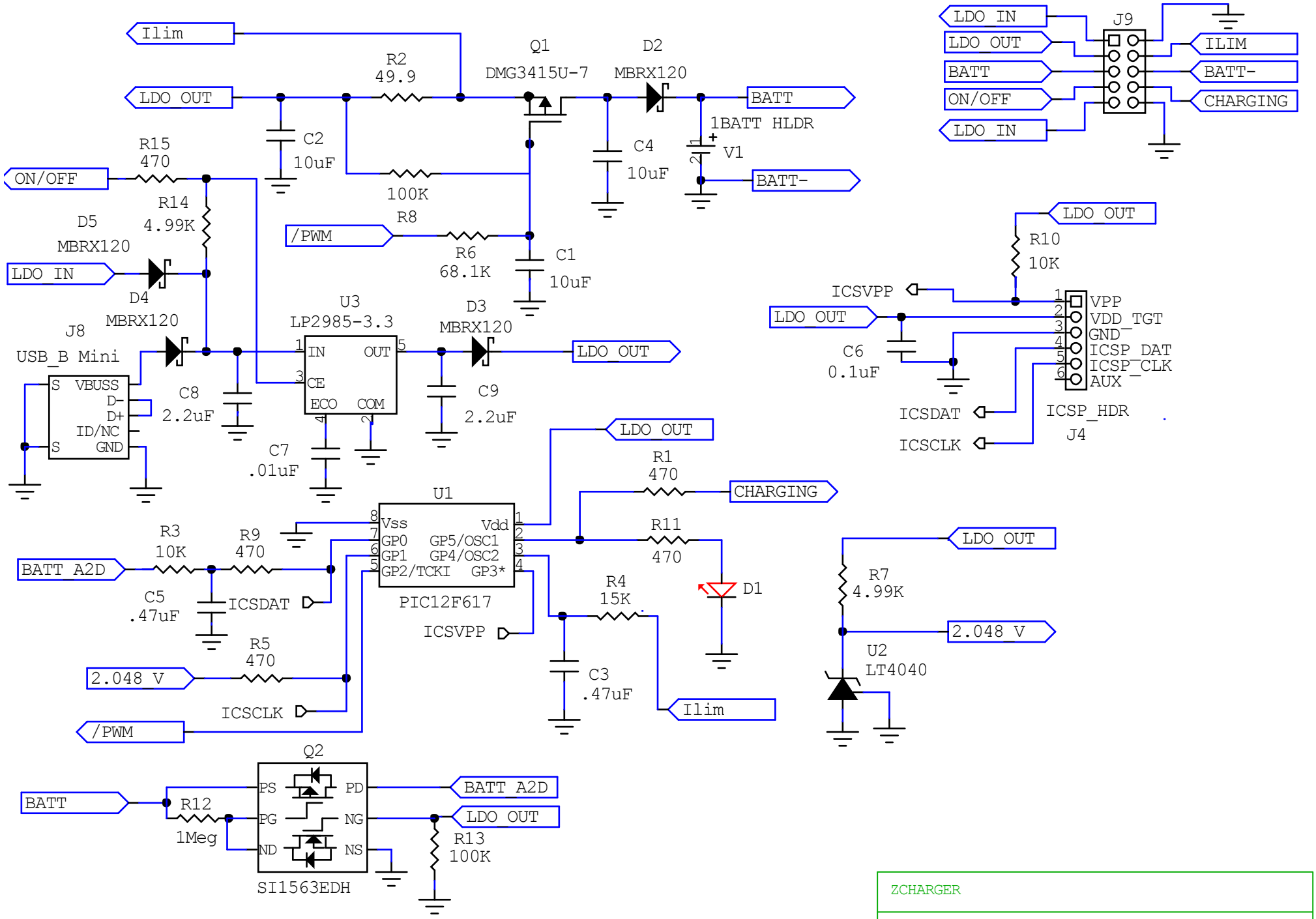

ZCHARGER	
Single Cell Charger using PWM Controller	
Rev 8B	ID ZCharger 12F617
Date: 12.20.10	Page: 1 of 1