Chapter 3: Verilog HDL

Lê Lý Minh Duy, Ph.D
Email: duyllm@hcmute.edu.vn
https://sites.google.com/view/ly-minh-duyle

Department of Computer and Communication Engineering
Faculty of Electrical and Electronics Engineering, HCMUTE

Original slides composed by Dr. Truong Ngoc Son – Modified by Dr. Do Duy Tan
Department of Computer and Communication Engineering

Design Abstraction Levels

- **Divide-and-Conquer**
  - Design modules once
  - Instantiate them thereafter
  - Standard Cells
    - Already laid out
  - Avoid re-design
  - Same as programming
- **Designer cares about module's:**
  - Functionality
  - Delay characteristics
  - Area
- **NOT:**
  - How the module was designed
  - Detailed solid-state behavior

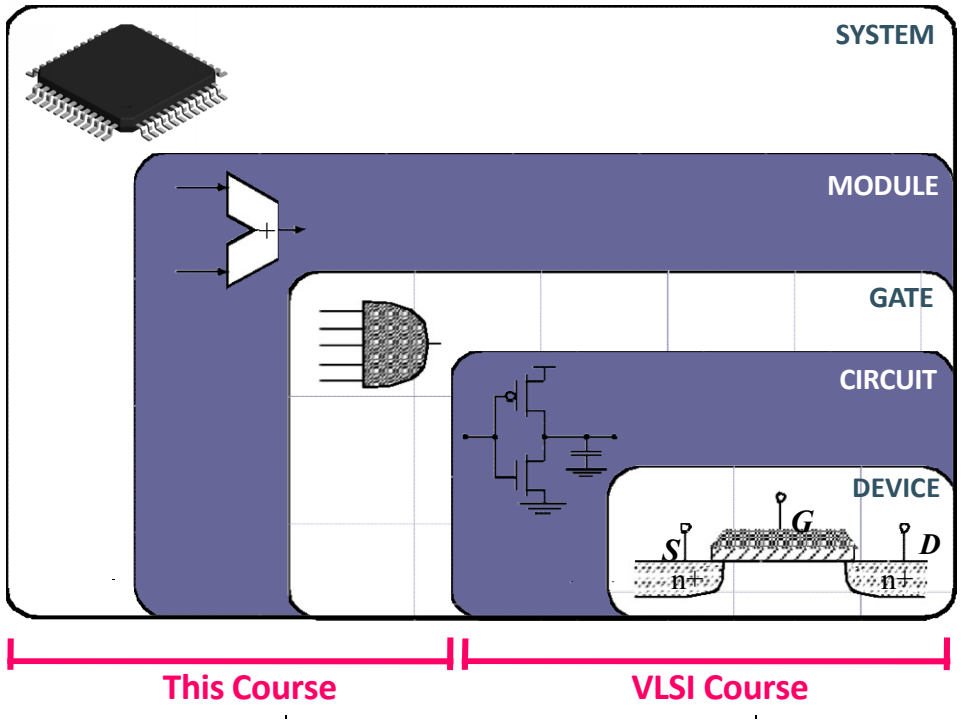


Ha Noi
Da Nang
Ho Chi Minh
qorvo
all around you
Dolphin Technologies
Viettel
FPT Fpt Software
CoAsia Microelectronics Corp.
VINTECH
Infineon
EXIMIUS Excellence Everyday
MEDIATEK
ASIAN
SYNOPSYS Silicon to Software
Uniquify ideas2silicon
SAVARTI
CENTIC ELECTRONIC DESIGN SERVICES
SYNAPSE design
SANEI HYTECHS co.,ltd.
FPT Fpt Software
RENESAS
FARADAY
Bridgetek BRIDGING TECHNOLOGY
VINTECH
MARVELL
Finger vina
V-SILICON
Arrive
Viettel
FPT Fpt Software
intel
AMPERE
CME CM Engineering Vietnam Co.,Ltd.
MICROCHIP
SAVARTI
QUALCOMM
Uniquify ideas2silicon
SYNAPSE design
SYNOPSYS Silicon to Software
Inphi Think fast.
ICDREC
REALTEK

Outline

- Verilog?
- Module
- Instances
- User Identifiers
- Numbers in Verilog
- Signal and Nets in Verilog
- Registers
- Vectors and Arrays
- Logical vs Bitwise Operators
- Conditional Operator
- Continuous Assignments
- Structural Model (Gate Level)
- Behavioral Model – Procedures: initial vs always
- Procedural Statements: If – case – for
- System Tasks
- EXAMPLES

What is Verilog

- Hardware Description Language (HDL)
- Hardware description languages such as Verilog HDL and VHDL became popular
- Developed in 1983
- Standard: IEEE 1364, Dec 1995

Design flow

Figure 1-1. Typical Design Flow

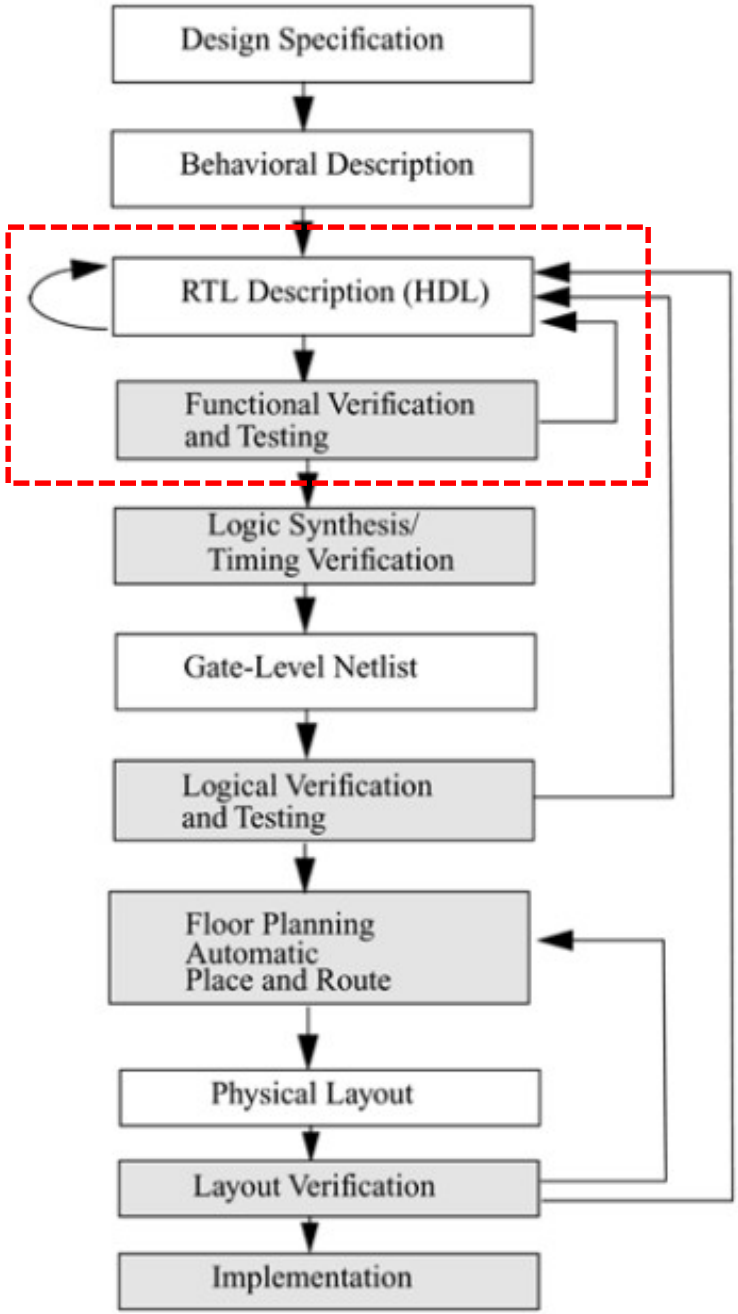

Popularity of Verilog

- Verilog HDL is a general-purpose hardware description language that is easy to learn and easy to use
- Verilog HDL allows different levels of abstraction to be mixed in the same model: gates, RTL, or behavioral code
- Most popular logic synthesis tools support Verilog HDL
- All fabrication vendors provide Verilog HDL libraries for postlogic synthesis simulation

Abstraction Levels in Verilog

Behavioral

RTL

Gate

Design Methodologies

- **Top-down design methodology:** we define the top-level block and identify the sub-blocks necessary to build the top-level block

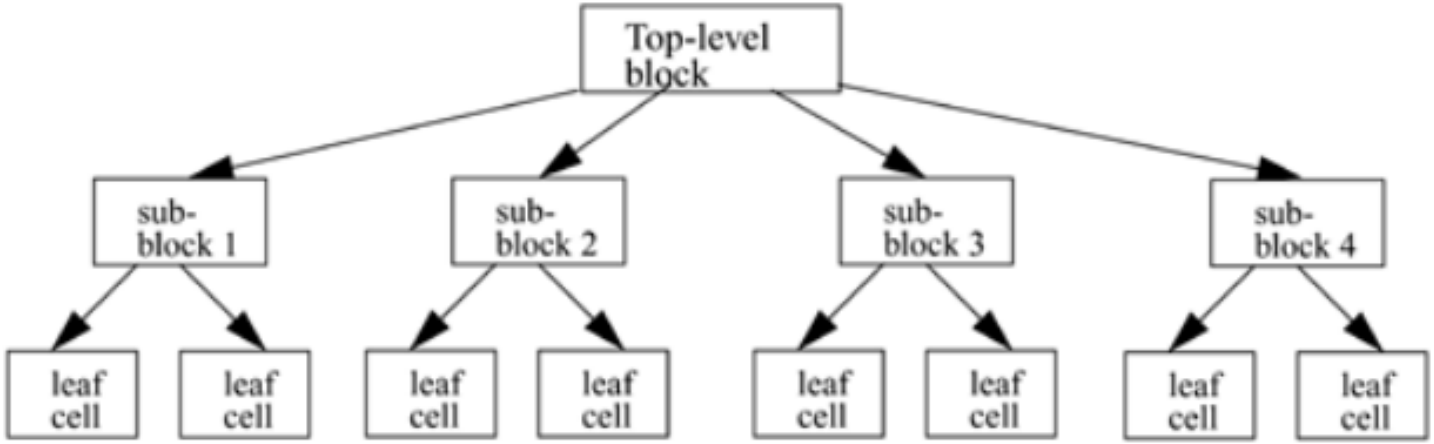

Design Methodologies

- **Bottom-up design methodology:** we first identify the building blocks that are available to us. We build bigger cells, using these building blocks

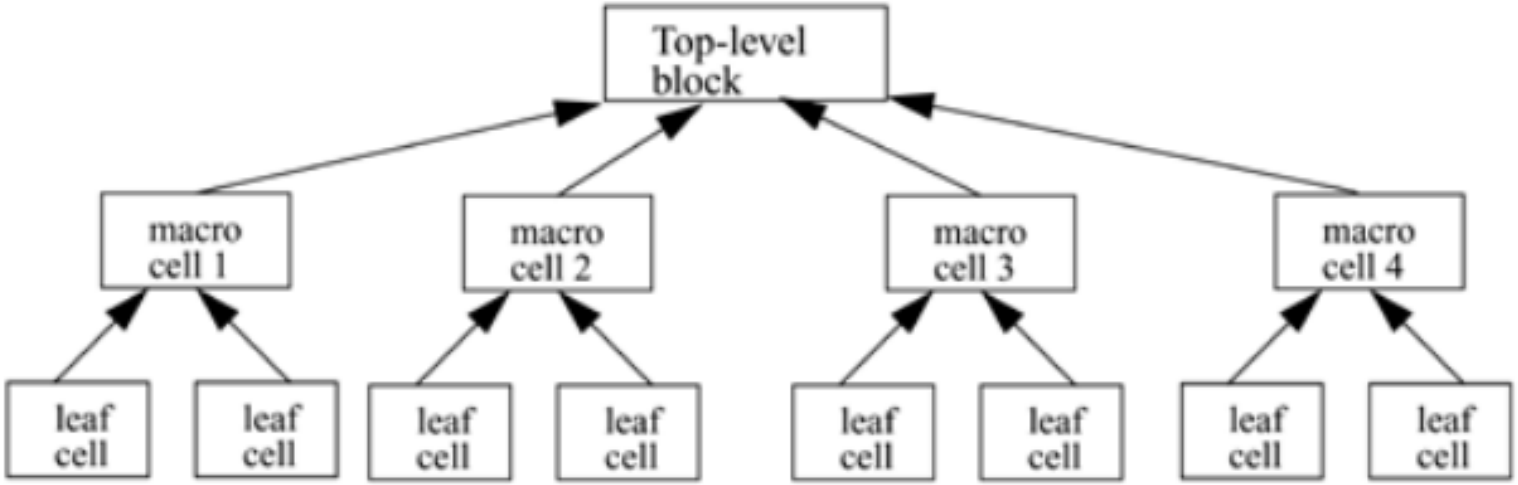

4 bit counter

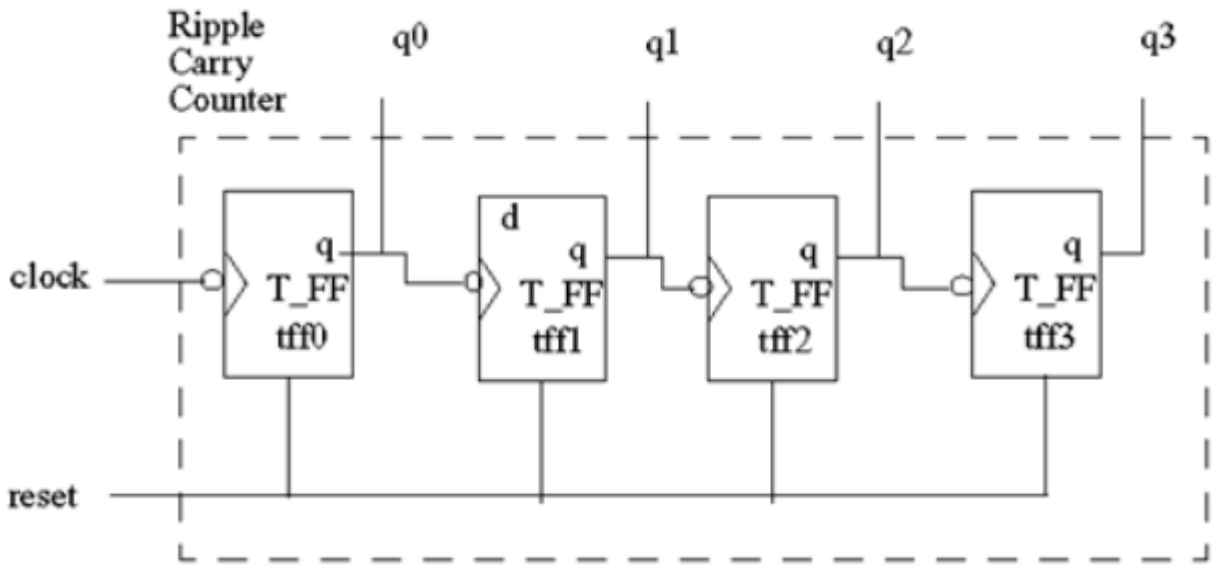

4 bit counter, top-down design

reset	q_n	q_{n+1}
1	1	0
1	0	0
0	0	1
0	1	0
0	0	0

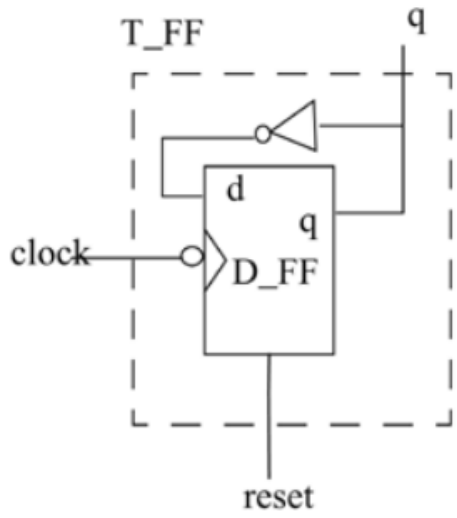

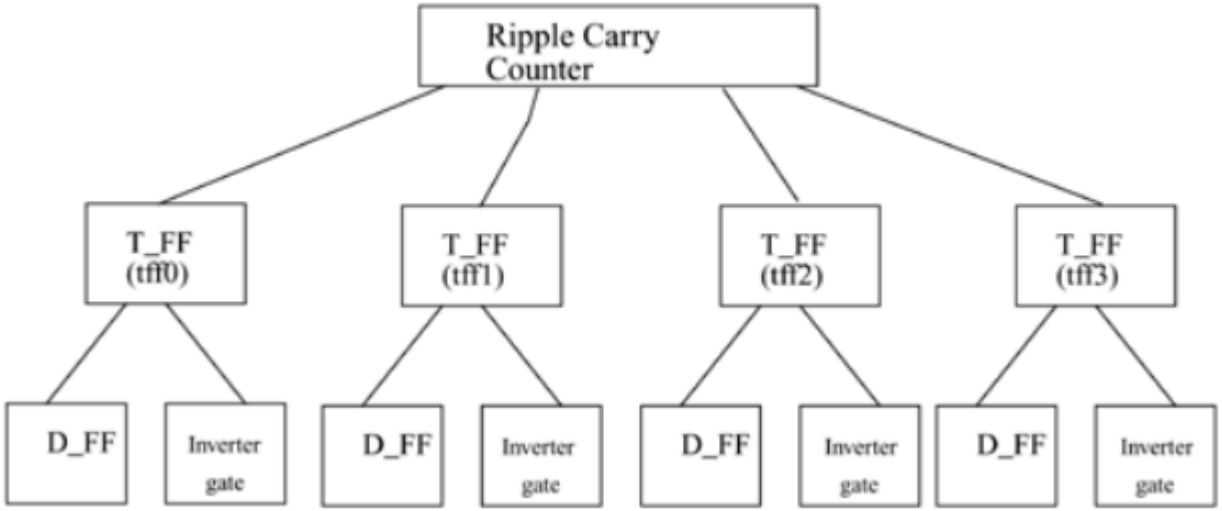

Outline

- Verilog?
- Module
- Instances
- User Identifiers
- Numbers in Verilog
- Signal and Nets in Verilog
- Registers
- Vectors and Arrays
- Logical vs Bitwise Operators
- Conditional Operator
- Continuous Assignments
- Structural Model (Gate Level)
- Behavioral Model – Procedures: Initial vs Always
- Procedural Statements: If – case – for
- System Tasks

Module

- A module is the basic building block in Verilog.
- A module can be an element or a collection of lower-level design blocks
- A module provides the necessary functionality to the higher-level block through its port interface (inputs and outputs)

Module

```
module <module_name> (<module_terminal_list>);
...
<module internals>
...
endmodule
```

Module

Specifically, the T-flipflop could be defined as a module as follows:

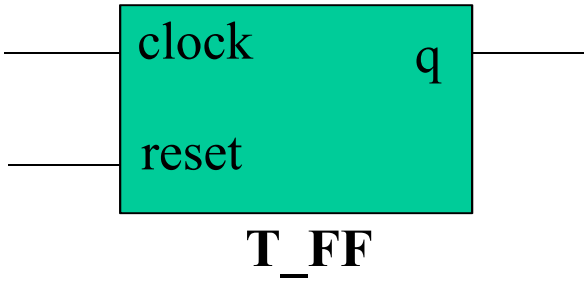


```
module T_FF (clock, reset, q);
        input clock;
       input reset;
        // input clock, reset;//clock, reset 1 bit
        //input [2:0] clock, reset;//clock 3 bit, reset 3 bit
        // input [1:0] clock; ;//clock 2 bit
        output q; //q là 1 bit
        //output [1:0] q; //q là 2 bit
        .
        <functionality of T-flipflop>
        .
endmodule
```

Example

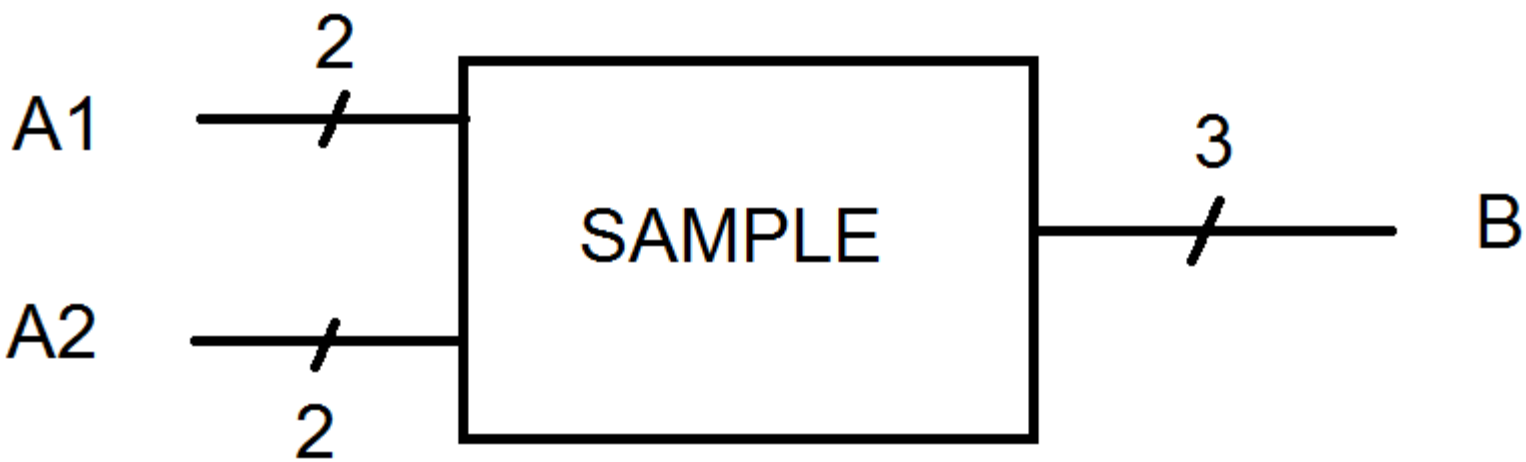

Outline

- Verilog?
- Module
- Instances
- User Identifiers
- Numbers in Verilog
- Signal and Nets in Verilog
- Registers
- Vectors and Arrays
- Logical vs Bitwise Operators
- Conditional Operator
- Continuous Assignments
- Structural Model (Gate Level)
- Behavioral Model – Procedures: Initial vs Always
- Procedural Statements: If – case – for
- System Tasks

Instances

module ripple_carry_counter4b(clk, rst, q);
input *clk, rst;*
output *[3:0] q;*

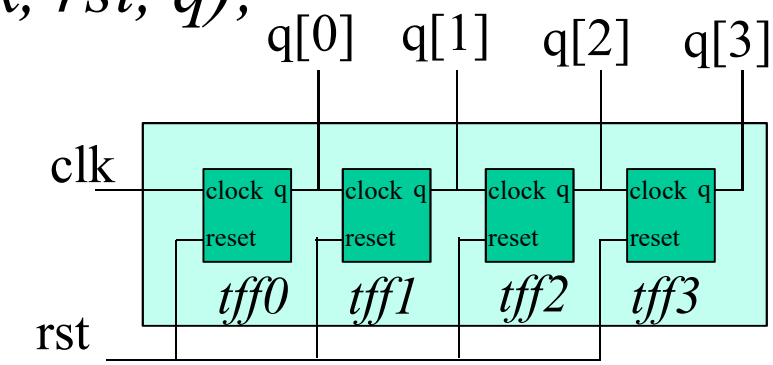

ripple_carry_counter

T_FF tff0(.clock(clk), .reset(rst), .q(q[0]));
T_FF tff1(.clock(q[0]), .reset(rst), .q(q[1]));
T_FF tff2(.clock(q[1]), .reset(rst), .q(q[2]));
T_FF tff3(.clock(q[2]), .reset(rst), .q(q[3]));
endmodule

T_FF tff0(clk, rst, q[0]);//Đúng
T_FF tff0(reset, clk, q[0]);//SAI
T_FF tff0(.reset(rst), .clock(clk), .q(q[0]));

Instances

```
module T_FF(q, clk, reset);
output q;
input clk, reset;
wire d;
D_FF dff0(q, d, clk, reset);
not n1(d, q);
endmodule
```

Review - Ripple Adder Example

```
module FullAdder(a, b, ci, r, co);
   input a, b, ci;
   output r, co;

   assign r = a ^ b ^ ci;
  assign co = a&ci + a&b + b&cin;

endmodule
```

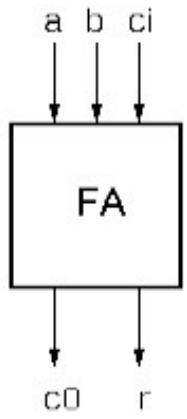

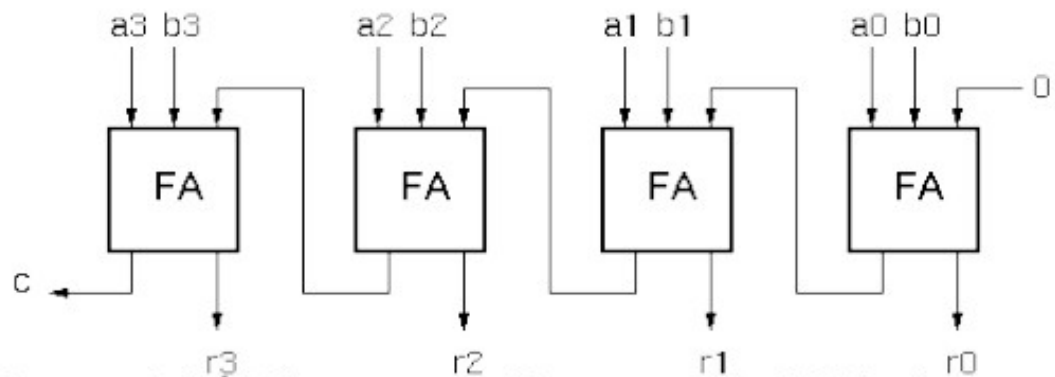


```
module Adder(A, B, R);
  input [3:0] A;
  input [3:0] B;
  output [4:0] R;

  wire c1, c2, c3;
  FullAdder
  add0(.a(A[0]), .b(B[0]), .ci(1'b0), .co(c1),   .r(R[0]) ),
  add1(.a(A[1]), .b(B[1]), .ci(c1),   .co(c2),   .r(R[1]) ),
  add2(.a(A[2]), .b(B[2]), .ci(c2),   .co(c3),   .r(R[2]) ),
  add3(.a(A[3]), .b(B[3]), .ci(c3),   .co(R[4]), .r(R[3]) );
endmodule
```

Outline

- Verilog?
- Module
- Instances
- User Identifiers
- Numbers in Verilog
- Signal and Nets in Verilog
- Registers
- Vectors and Arrays
- Logical vs Bitwise Operators
- Conditional Operator
- Continuous Assignments
- Structural Model (Gate Level)
- Behavioral Model – Procedures: Initial vs Always
- Procedural Statements: If – case – for
- System Tasks

User Identifiers

- Formed from {[A-Z], [a-z], [0-9], _, $}, but ..
- .. can't begin with $ or [0-9] or -
  - `myidentifier` ☐V
  - `m_y_identifier` ☐V
  - `3my_identifier` ☐
  - `$my_identifier` ☐
  - `_myidentifier$` ☐V
  - `-myidentifier$` ☐
- Identifiers are case sensitive
  - `myid` ≠ `Myid`

Comments

- `// The rest of the line is a comment`
- `/* Multiple line`
  `comment  */`
- `/* Nesting /* comments */ do` **NOT** `work  */`

Verilog Value Set

- *0* represents low logic level or false condition
- *1* represents high logic level or true condition
- *x* represents unknown logic level
- *z* represents high impedance logic level

Outline

- Verilog?
- Module
- Instances
- User Identifiers
- Numbers in Verilog
- Signal and Nets in Verilog
- Registers
- Vectors and Arrays
- Logical vs Bitwise Operators
- Conditional Operator
- Continuous Assignments
- Structural Model (Gate Level)
- Behavioral Model – Procedures: Initial vs Always
- Procedural Statements: If – case – for
- System Tasks

Numbers in Verilog (i)

<size>’<radix> <value>

No of bits

Binary	→ b or B
Octal	→ o or O
Decimal	→ d or D
Hexadecimal	→ h or H

Consecutive chars 0-f, x, z

- 8’h a5 = 1010|0101
- 8’b 10100101 = 1010|0101
- 12’o 3zx7 = 011|zzz|xxx|111

Numbers in Verilog (ii)

- You can insert "_" for readability
  - 12'b 000_111_010_100
  - 12'b 0001_1101_0100
  - 12'o 07_24

  Represent the same number
- Bit extension
  - MS bit = 0, x or z ⇒ extend this
    - 4'b x1 = 4'b xx_x1
  - MS bit = 1 ⇒ zero extension
    - 4'b 1x = 4'b 00_1x

Numbers in Verilog (iii)

- If *size* is ommitted it
  - is inferred from the *value* or
  - takes the simulation specific number of bits or
  - takes the machine specific number of bits
- If *radix* is ommitted <u>too</u> .. decimal is assumed
  - 15 = <size>'d 15

Parameters in Verilog

- A parameter associates an identifier name with a constant. Let the Verilog code include the following declarations:

parameter n = 4;

parameter S0 = 2’b00, S1 = 2’b01, S2 = 2’b10, S3 = 2’b11;

Outline

- Verilog?
- Module
- Instances
- User Identifiers
- Numbers in Verilog
- Signal and Nets in Verilog
- Registers
- Vectors and Arrays
- Logical vs Bitwise Operators
- Conditional Operator
- Continuous Assignments
- Structural Model (Gate Level)
- Behavioral Model – Procedures: Initial vs Always
- Procedural Statements: If – case – for
- System Tasks

Signal in Verilog code

- Signal = physical WIRE = variable without storing
- In Verilog, a signal in a circuit is represented as a *net* or a *variable* with a specific type. The term *net* is derived from the electrical jargon, where it refers to the interconnection of two or more points in a circuit. A net or variable declaration has the form

type [range] signal_name{signal_name};

Nets (i)

- Can be thought as hardware wires driven by logic
- Equal *z* when unconnected
- Various types of nets
  - `wire`
  - `wand` (wired-AND)
  - `wor` (wired-OR)
  - `tri` (tri-state)
- In following examples: Y is evaluated, ***automatically***, every time A or B changes

Wires/Nets (ii)

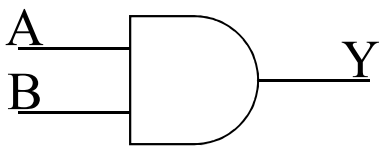


```
wire A, B, Y;  // declaration signal
assign Y = A & B;
```

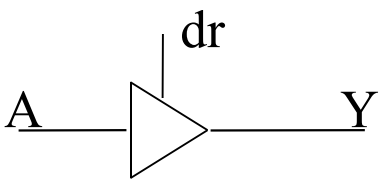


```
tri Y;  // declaration
assign Y = (dr) ? A : z;
```

Outline

- Verilog?
- Module
- Instances
- User Identifiers
- Numbers in Verilog
- Signal and Nets in Verilog
- Registers
- Vectors and Arrays
- Logical vs Bitwise Operators
- Conditional Operator
- Continuous Assignments
- Structural Model (Gate Level)
- Behavioral Model – Procedures: Initial vs Always
- Procedural Statements: If – case – for
- System Tasks

Registers

- Variables that store values
- Do not represent real hardware but ..
- .. real hardware can be implemented with registers
- Only one type: `reg`

```
//reg A; reg C;
reg A, C; // A: 1 bit, C: 1 bit
  //reg [1:0] A;//A: 2 bit
  // assignments are always done inside a procedure
  A = 1;
  C = A; // C gets the logical value 1
  A = 0; // C is still 1
  C = 0; // C is now 0
```

- Register values are updated explicitly!!

Outline

- Verilog?
- Module
- Instances
- User Identifiers
- Numbers in Verilog
- Signal and Nets in Verilog
- Registers
- Vectors and Arrays
- Logical vs Bitwise Operators
- Conditional Operator
- Continuous Assignments
- Structural Model (Gate Level)
- Behavioral Model – Procedures: Initial vs Always
- Procedural Statements: If – case – for
- System Tasks

Vectors

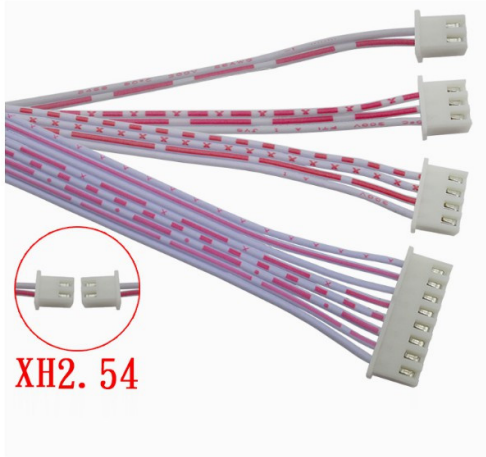

- Represent buses

```
wire [3:0] busA;//MSB:LSB
reg [1:4] busB;// reg [3:0] busB;
reg [1:0] busC;//busC[1], busC[0]
```

- Left number is MS bit
- Slice management

```
busC = busA[2:1];   ⇔   { busC[1] = busA[2];
                          busC[0] = busA[1];
```

- Vector assignment (***by position!!***)

```
busB = busA;   ⇔   { busB[1] = busA[3];
                     busB[2] = busA[2];
                     busB[3] = busA[1];
                     busB[4] = busA[0];
```

Integer & Real Data Types

- Declaration

```
integer i, k;
real r;
```

- Use as registers (inside procedures)

```
i = 1; // assignments occur inside procedure
r = 2.9;
k = r; // k is rounded to 3
```

- Integers are not initialized!!
- Reals are initialized to *0.0*

Time Data Type

- Special data type for simulation time measuring
- Declaration

```
time my_time;
```

- Use inside procedure

```
my_time = $time; // get current sim time
```

- Simulation runs at simulation time, not real time

Arrays (i)

- Syntax

```
integer count[1:5]; // 5 integers
reg var [-15:16]; // 32 1-bit regs, var[-15] → var[16]
reg [1:0] mem1D;//2 bit
reg [7:0] mem [0:1023]; // 1024 8-bit regs (bus 8)
//512 16-bit regs???
```

reg [15:0] mem [0:511];

```
//mem[0]: 8-bit register mem[0] = 8'h A5
//mem[0][5:0]: first 6-bit of register mem[0]
//reg array [7:0] = '{0,0,0,0,0,0,0,1};//8 1-bit regs
```

- Accessing array elements
  - Entire element: `mem[1] = 8'b 10101010;`
  - Element subfield (needs temp storage):

```
reg [7:0] temp;
temp = mem[10];
var[6] = temp[2];
```

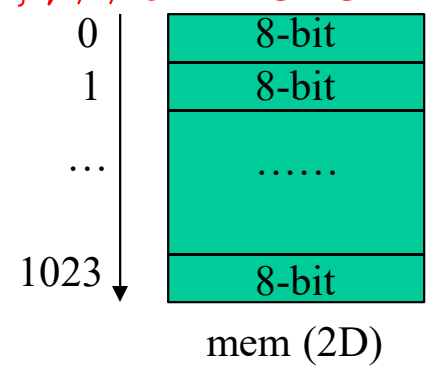

Arrays (ii)

- Limitation: Cannot access array subfield or entire array at once

```
var[2:9] = ???; // WRONG!!
var = ???; // WRONG!!
```

- No multi-dimentional arrays

```
reg var[1:10] [1:100]; // WRONG!!
```

- Arrays don’t work for the Real data type

```
real r[1:10]; // WRONG !!
```

Strings

- Implemented with regs:

```
reg [8*13:1] string_val; // can hold up to 13 chars
..
string_val = "Hello Verilog";
string_val = "hello"; // MS Bytes are filled with 0
string_val = "I am overflowed"; // "I " is truncated
>>"am overflowed"
```

- Escaped chars:
  - `\n` newline
  - `\t` tab
  - `%%` `%`
  - `\\` `\`
  - `\"` `"`

Outline

- Verilog?
- Module
- Instances
- User Identifiers
- Numbers in Verilog
- Signal and Nets in Verilog
- Registers
- Vectors and Arrays
- Logical vs Bitwise Operators
- Conditional Operator
- Continuous Assignments
- Structural Model (Gate Level)
- Behavioral Model – Procedures: Initial vs Always
- Procedural Statements: If – case – for
- System Tasks

Logical Operators

- `&&` → logical AND
- `||` → logical OR
- `!` → logical NOT
- Operands evaluated to ONE bit value: *0*, *1* or *x*
- Result is ONE bit value: *0*, *1* or *x*

```
A = 6;
B = 0;
C = x;
```

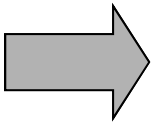

```
A && B → 1 && 0 → 0
A || !B → 1 || 1 → 1
C || B → x || 0 → x
```

but C&&B=0

Bitwise Operators (i)

- `&` → bitwise AND
- `|` → bitwise OR
- `~` → bitwise NOT
- `^` → bitwise XOR
- `~^` or `^~` → bitwise XNOR

- Operation on bit by bit basis

Bitwise Operators (ii)

- `a = 4'b1010;`
  `b = 4'b1100;`

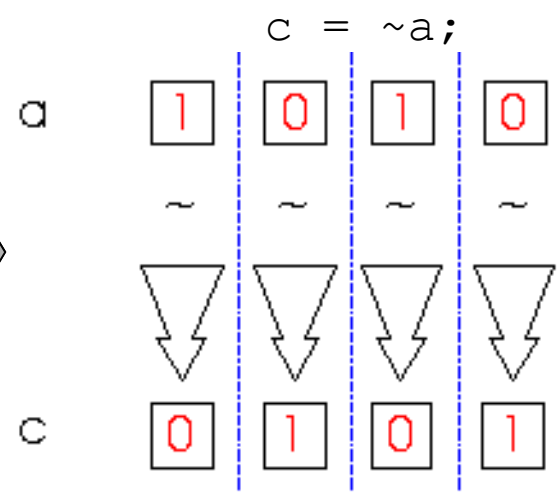

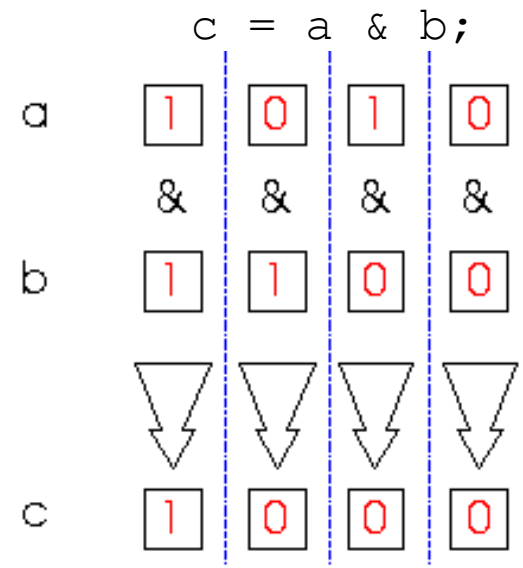

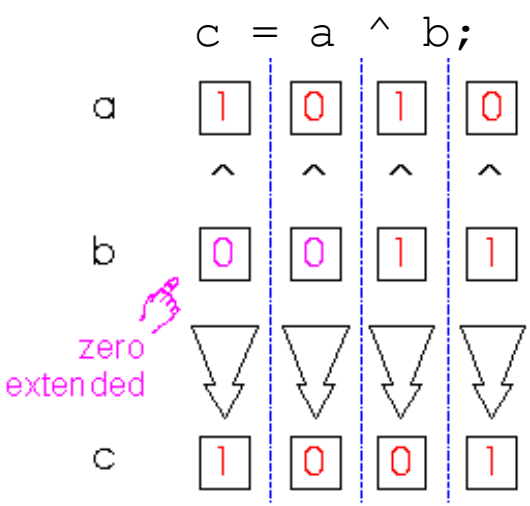

- `a = 4'b1010;`
  `b = 2'b11;`

Reduction Operators

- `&` → AND
- `|` → OR
- `^` → XOR
- `~&` → NAND
- `~|` → NOR
- `~^` or `^~` → XNOR

- One multi-bit operand → One single-bit result

```
a = 4'b1001;
..
c = |a; // c = 1|0|0|1 = 1
```

Shift Operators

- >> → shift right
- << → shift left

- Result is same size as first operand, **always zero filled**

```
a = 4'b1010;
...
d = a >> 2;   // d = 0010
c = a << 1;   // c = 0100
```

Concatenation Operator

- `{op1, op2, ..}` → concatenates op1, op2, .. to single number
- Operands must be sized !!

```
reg a;
reg [2:0] b, c;
..
a = 1'b 1;
b = 3'b 010;
c = 3'b 101;
catx = {a, b, c};          // catx = 1_010_101
caty = {b, 2'b11, a};      // caty = 010_11_1
catz = {b, 1};             // WRONG !!
```

- Replication ..

```
catr = {4{a}, b, 2{c}};  // catr = 1111_010_101101
```

Relational Operators

- > → greater than
- < → less than
- >= → greater or equal than
- <= → less or equal than

- Result is one bit value: *0*, *1* or *x*

```
1 > 0          → 1
'b1x1 <= 0     → x
10 < z         → x
```

Equality Operators

- `==` → logical equality
- `!=` → logical inequality

} **Return *0*, *1* or *x***

- `===` → case equality
- `!==` → case inequality

} Return *0* or *1*

(x's are compared, and the result is 1)

- `4'b 1001 == 4'b 1101` → *0*
- `4'b 1z0x == 4'b 1z0x` → *x*
- `4'b 1z0x === 4'b 1z0x` → *1*
- `4'b 1z0x !== 4'b 1z0x` → *0*

Outline

- Verilog?
- Module
- Instances
- User Identifiers
- Numbers in Verilog
- Signal and Nets in Verilog
- Registers
- Vectors and Arrays
- Logical vs Bitwise Operators
- Conditional Operator
- Continuous Assignments
- Structural Model (Gate Level)
- Behavioral Model – Procedures: Initial vs Always
- Procedural Statements: If – case – for
- System Tasks

Conditional Operator

- `cond_expr ? true_expr : false_expr`

- Like a 2-to-1 mux ..

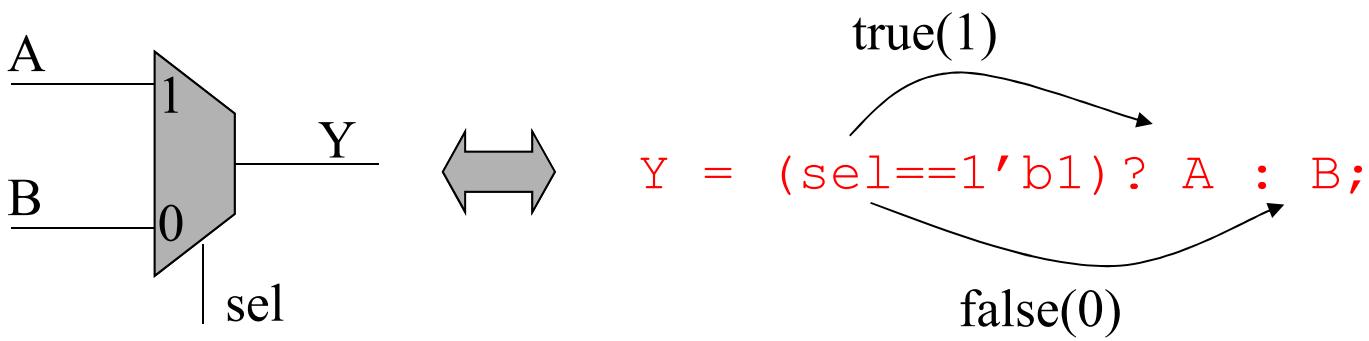

sel	Y
1	A
0	B

Conditional Operator

- Like a 4-to-1 mux ..

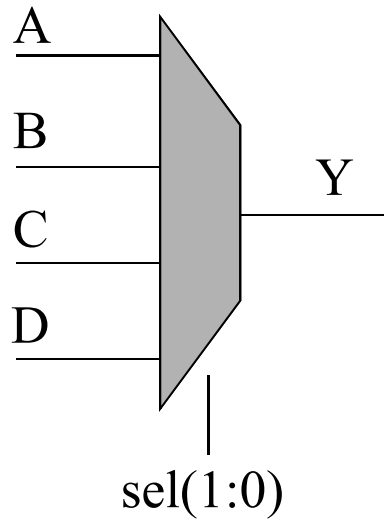

sel	Y
00	A
01	B
10	C
11	D

```
Y = (sel==2'b00)? A :((sel==2'b01)? B:((sel==2'b10)? C : D));
```

true false true false true false

Arithmetic Operators (i)

- `+, -, *, /, %`
- If any operand is *x* the result is *x*
- Negative registers:
  - regs can be assigned negative but are treated as unsigned

```
reg [15:0] regA;
..
regA = -4'd12;        // stored as 2^16-12 = 65524
regA/3
```

evaluates to 21861

Arithmetic Operators (ii)

- Negative integers:
  - can be assigned negative values
  - different treatment depending on base specification or not

```
reg [15:0] regA;
integer intA;
..
intA = -12/3;     // evaluates to -4 (no base spec)
intA = -'d12/3;  // evaluates to 1431655761 (base spec)
```

Operator Precedence

+-!~unary	highest precedence
*/%	
+-(binary)	
<< >>	
< <= => >	
== != === !==	
& ~&	
^ ^~ ~^	
| ~|	
&&	
||	
?: conditional	lowest precedence

Use parentheses to enforce your priority

Hierarchical Design

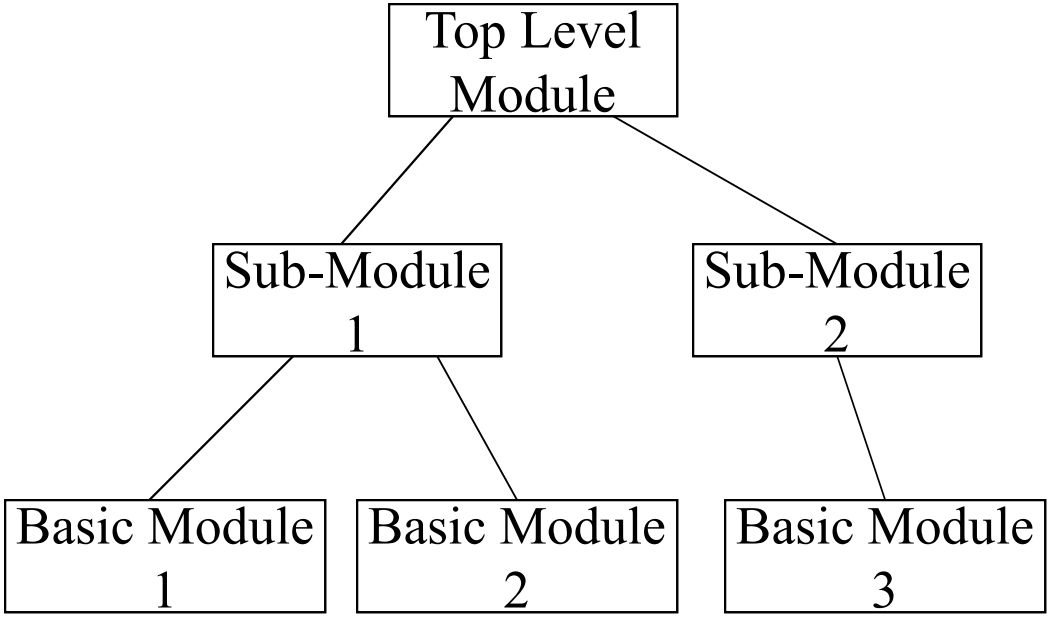

E.g.

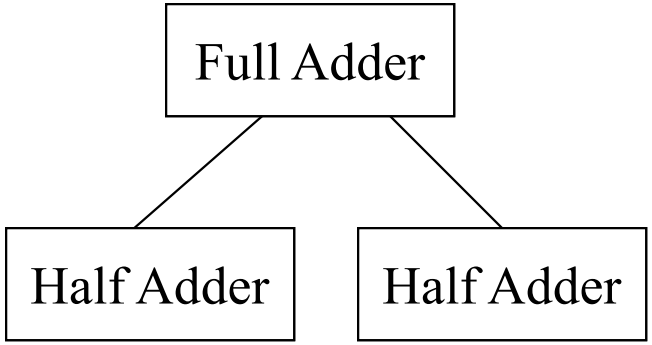

Module

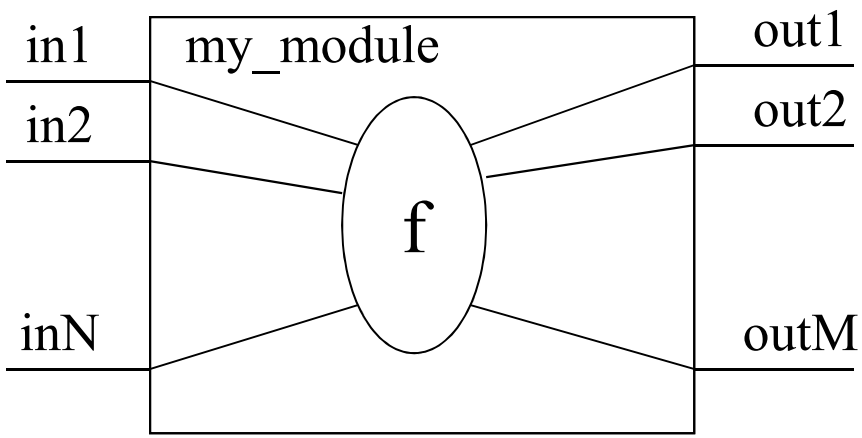


```
module my_module(out1, .., inN);
output out1, .., outM;
input in1, .., inN;

.. // declarations
.. // description of f (maybe
.. // sequential)

endmodule
```

Everything you write in Verilog must be inside a module
exception: compiler directives

Example: Half Adder

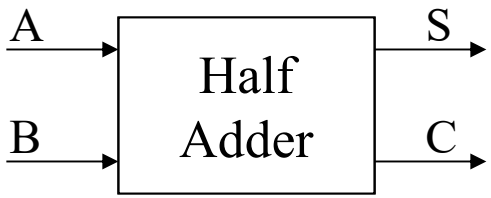

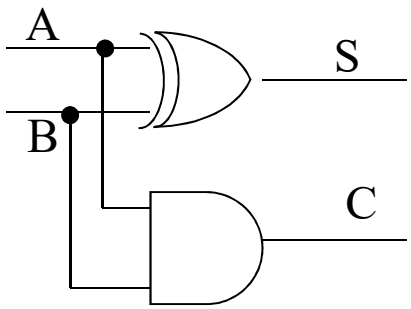

Example: Full Adder

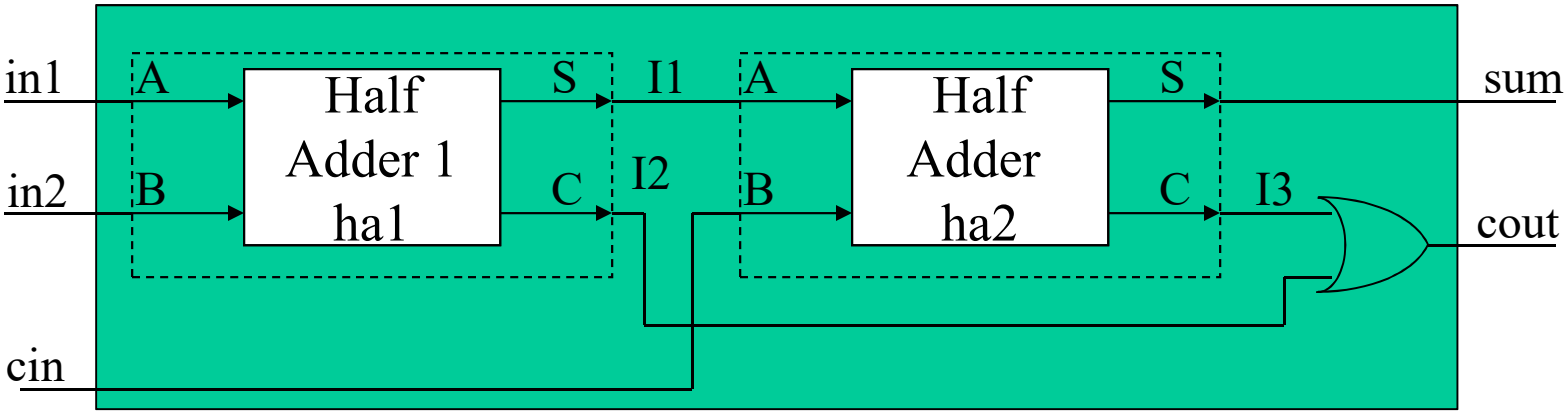


```
module full_adder(sum, cout, in1, in2, cin);
output sum, cout;
input in1, in2, cin;

wire I1, I2, I3;

half_adder ha1(.A(in1), .B(in2), .S(I1), .C(I2));
half_adder ha2(.A(I1), .B(cin), .S(sum), .C(I3));

assign cout = I2 | I3;// OR(cout, I2, I3);

endmodule
```

Hierarchical Names

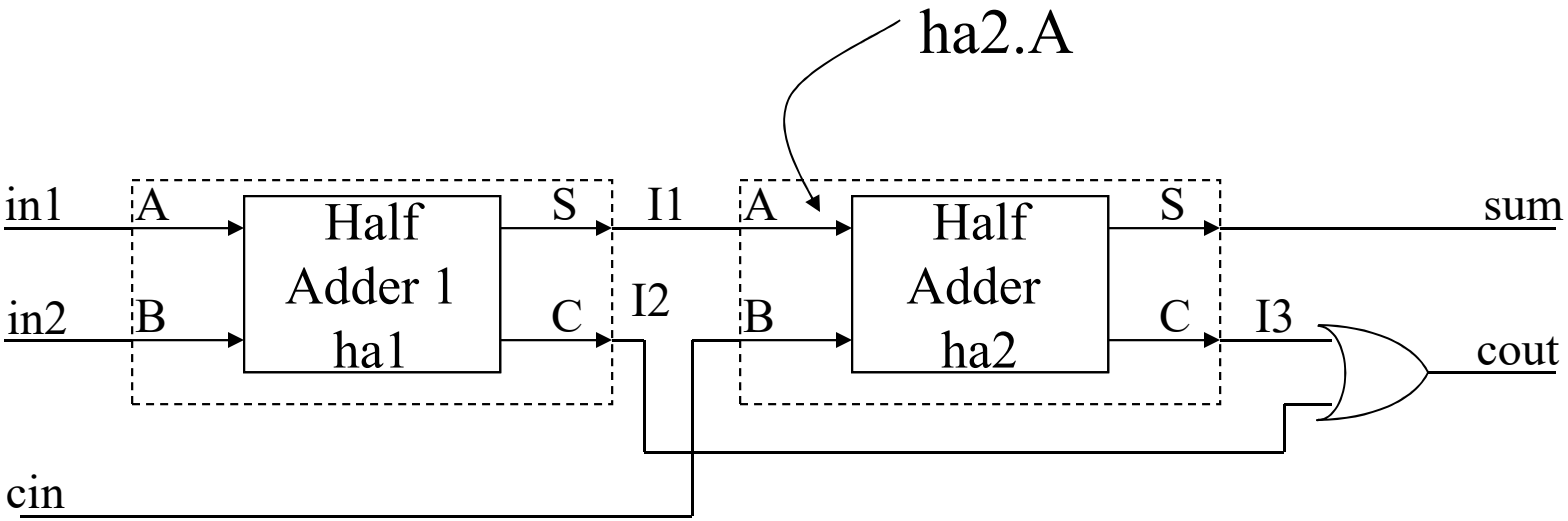

Remember to use instance names,
not module names

Port Assignments

- Inputs

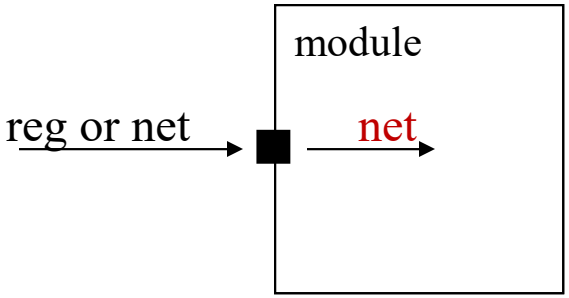

- Outputs

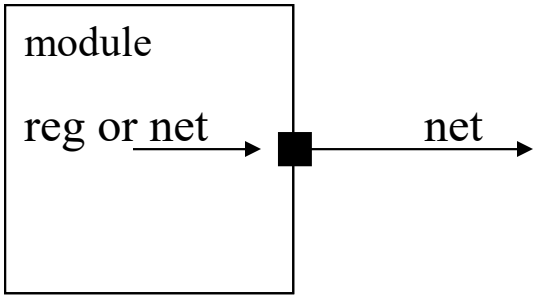

- Inouts

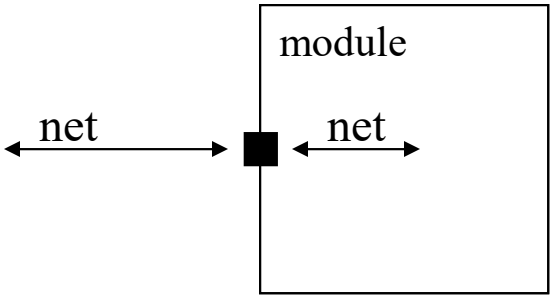

Outline

- Verilog?
- Module
- Instances
- User Identifiers
- Numbers in Verilog
- Signal and Nets in Verilog
- Registers
- Vectors and Arrays
- Logical vs Bitwise Operators
- Conditional Operator
- Continuous Assignments
- Structural Model (Gate Level)
- Behavioral Model – Procedures: Initial vs Always
- Procedural Statements: If – case – for
- System Tasks

Continuous Assignments
a closer look

- Syntax:

```
assign #del <id> = <expr>;
```

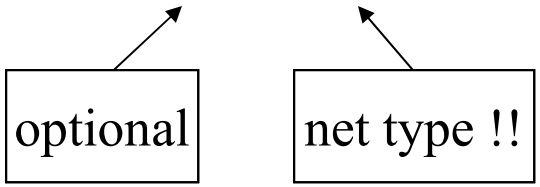

- Where to write them:
  - inside a module
  - outside procedures
- Properties:
  - they all execute in parallel
  - are order independent
  - are continuously active

Outline

- Verilog?
- Module
- Instances
- User Identifiers
- Numbers in Verilog
- Signal and Nets in Verilog
- Registers
- Vectors and Arrays
- Logical vs Bitwise Operators
- Conditional Operator
- Continuous Assignments
- Structural Model (Gate Level)
- Behavioral Model – Procedures: Initial vs Always
- Procedural Statements: If – case – for
- System Tasks

Structural Model (Gate Level)

- Built-in gate primitives:

  `and, nand, nor, or, xor, xnor, buf, not, bufif0, bufif1, notif0, notif1`

- Usage:

  `nand (out, in1, in2);` 2-input NAND without delay

  `and #2 (out, in1, in2, in3);` 3-input AND with 2 t.u. delay

  `not #1 N1(out, in);` NOT with 1 t.u. delay and instance name

  `xor X1(out, in1, in2);` 2-input XOR with instance name

- Write them inside module, outside procedures

Example: Half Adder, 2nd Implementation

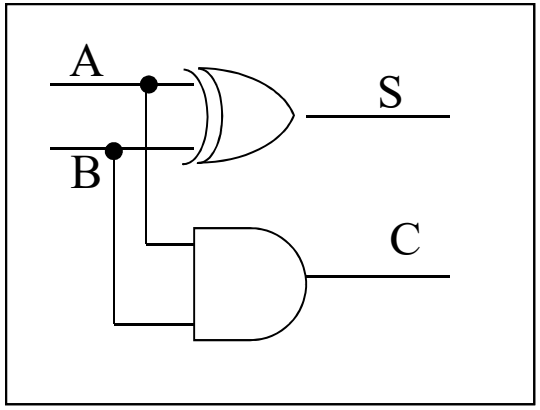

Assuming:
- XOR: 2 t.u. delay
- AND: 1 t.u. delay

```
module half_adder(S, C, A, B);
output S, C;
input A, B;

wire S, C, A, B;

xor #2 (S, A, B);
//assign #2 S = A ^ B;//xor

and #1 (C, A, B);

endmodule
```

Outline

- Verilog?
- Module
- Instances
- User Identifiers
- Numbers in Verilog
- Signal and Nets in Verilog
- Registers
- Vectors and Arrays
- Logical vs Bitwise Operators
- Conditional Operator
- Continuous Assignments
- Structural Model (Gate Level)
- Behavioral Model – Procedures: Initial vs Always
- Procedural Statements: If – case – for
- System Tasks

Behavioral Model - Procedures (i)

- Procedures = sections of code that we know they execute sequentially
- Procedural statements = statements inside a procedure (they execute sequentially)
- e.g. another 2-to-1 mux implem:

```
begin
    if (sel == 0)
        Y = B;
    else
        Y = A;
end
```

Execution Flow

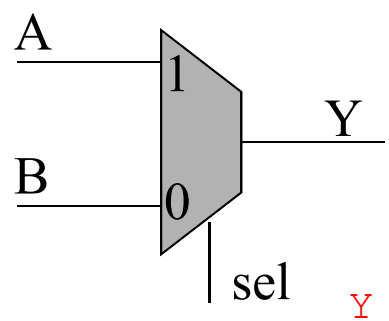

sel	Y
1	A
0	B

```
Y = (sel)? A : B;
```

Procedural assignments:
Y must be reg !!

Behavioral Model - Procedures (ii)

- Modules can contain any number of procedures
- Procedures execute in parallel (in respect to each other) and ..
- .. can be expressed in two types of blocks:
  - initial → they execute only once
  - always → they execute for ever (until simulation finishes)

"Initial" Blocks

- Start execution at **simulation** time zero and finish when their last statement executes

```
module nothing;

initial
  $display("I'm first");

initial
  begin
  #50;
  $display("Really?");
  end

endmodule
```

Will be displayed at sim time 0

Will be displayed at sim time 50

"Always" Blocks

- Start execution at sim time zero and continue until sim finishes

```
always
 begin
   if (sel == 0)
        Y = B;
   else
        Y = A;
   end
 end
```

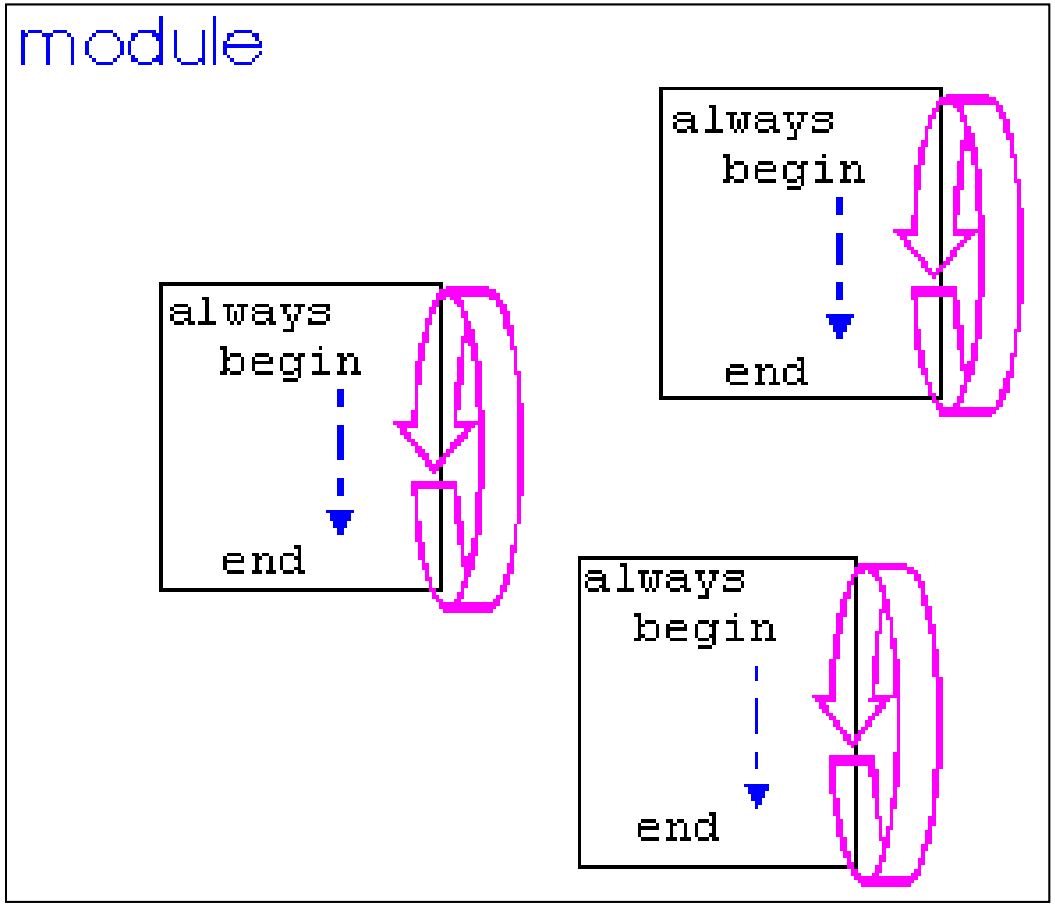

Events (i)

- @

```
always @(signal1 or signal2 or ..)
   begin
     ..
   end
```

```
always @(A,B,sel)
 begin
   if (sel == 0)
          Y = B;
   else
          Y = A;
   end
 end
```

execution triggers every time any signal changes

```
always @(posedge clk)
   begin
     ..
   end
```

execution triggers every time clk changes from *0* to *1*

```
always @(negedge clk)
   begin
     ..
   end
```

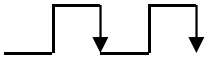

execution triggers every time clk changes from *1* to *0*

Examples

- 3rd half adder implem

```
module half_adder(S, C, A,
  B);
output S, C;
input A, B;

//wire A, B;
reg S,C;//result variables

always @(A , B)
  begin
  S = A ^ B;
  C = A & B;
  end

endmodule
```

- Behavioral edge-triggered D-FlipFlop implem

```
module dff(Q, D, Clk);
output Q;
input D, Clk;

//wire D, Clk;
reg Q;//result variable

always @(posedge Clk)
  Q = D;

endmodule
```

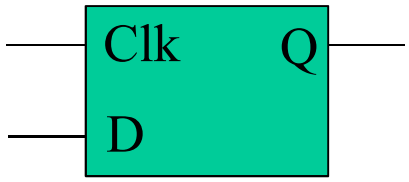

Events (ii)

- wait (expr)

```
always
    begin
    wait (ctrl)
    #10 cnt = cnt + 1;
    #10 cnt2 = cnt2 + 2;

    end
```

execution loops every time ctrl = 1 (level sensitive timing control)

- e.g. Level triggered DFF ?

Example

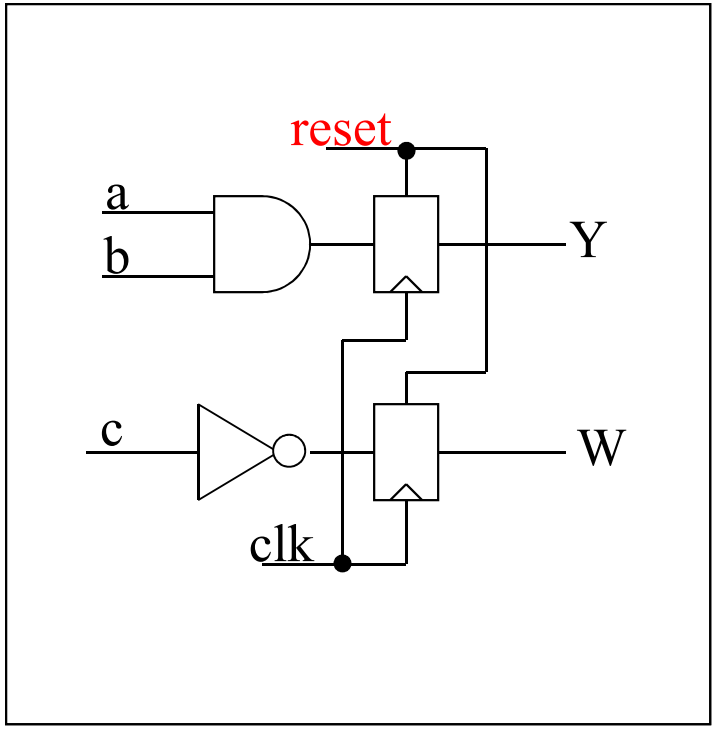


```
always @(reset or posedge clk)
        begin
        if (reset)
                begin
                Y = 0;
                W = 0;
                end
        else // reset = 0
                begin
                Y = a & b;
                W = ~c;
                end
        end
```

Timing (i)

```
initial
        begin
        #5 c = 1;
        #5 b = 0;
        #5 d = c;
        end
```

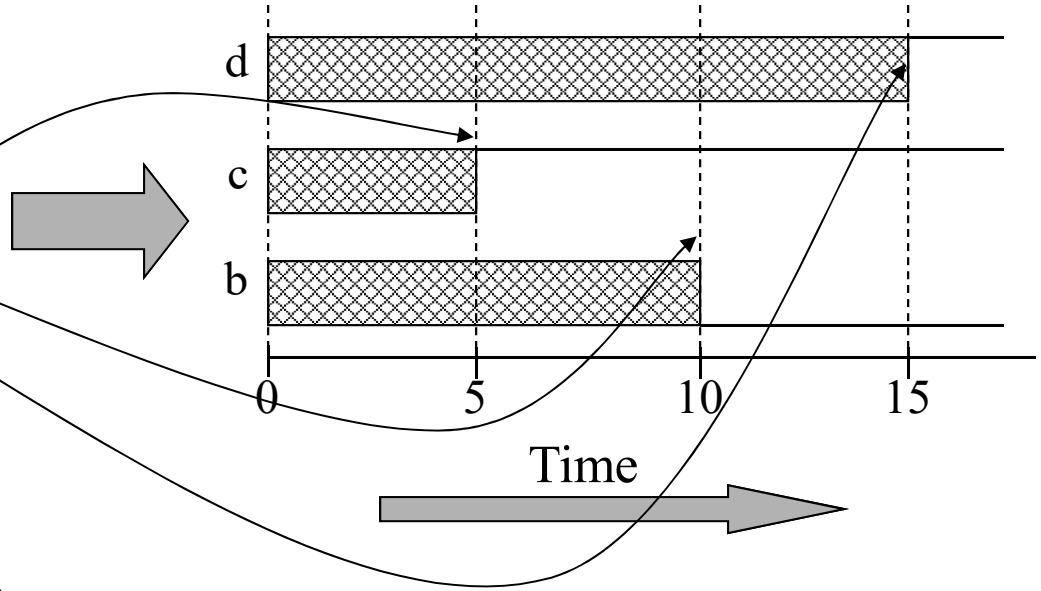

Each assignment is blocked by its previous one

Tham khảo thêm:

Video Hướng dẫn các bước làm BT TKVM (Lý thuyết)

Video Hướng dẫn sử dụng phần mềm Xilinx-ISE lập trình RTL và Testbench

Timing (ii)

```
initial begin
        fork
        #5 c = 1;
        #5 b = 0;
        #5 d = c;
        join
        end
```

Assignments are not blocked here

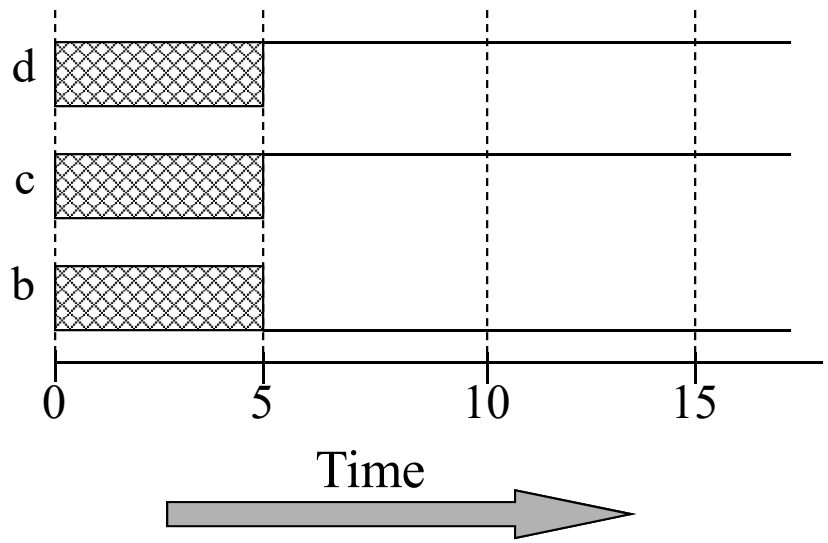

Outline

- Verilog?
- Module
- Instances
- User Identifiers
- Numbers in Verilog
- Signal and Nets in Verilog
- Registers
- Vectors and Arrays
- Logical vs Bitwise Operators
- Conditional Operator
- Continuous Assignments
- Structural Model (Gate Level)
- Behavioral Model – Procedures: Initial vs Always
- Procedural Statements: If – case – for
- System Tasks

Procedural Statements: if

```
if (expr1)
        true_stmt1;

else if (expr2)
        true_stmt2;
..
else
        def_stmt;
```

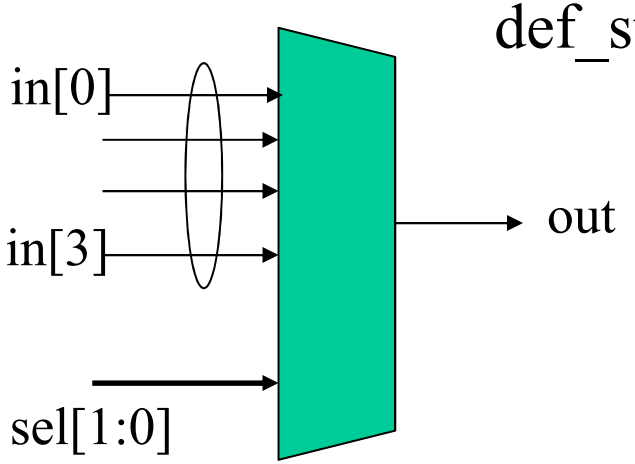

E.g. 4-to-1 mux:

```
module mux4_1(in, sel, out);
output out;
input [3:0] in;
input [1:0] sel;

//wire [3:0] in;
//wire [1:0] sel;
reg out;

always @(in or sel)
        begin
        if (sel == 2'b00)
                out = in[0];
        else if (sel == 2'b01)
                out = in[1];
        else if (sel == 2'b10)
                out = in[2];
        else
                out = in[3];
        end
endmodule
```

Procedural Statements: case

case (expr)

item_1: statement1;
item_2: statement2;
..
default: def_statement;

endcase

E.g. 4-to-1 mux:

```
module mux4_1(out, in, sel);
output out;
input [3:0] in;
input [1:0] sel;

reg out;
//wire [3:0] in;
//wire [1:0] sel;

always @(in or sel)
        case (sel)
        2'b00: out = in[0];
        2'b01: out = in[1];
        2'b10: out = in[2];
        2'b11: out = in[3];
        endcase
endmodule
```

Procedural Statements: for

for (init_assignment; cond; step_assignment)
stmt;

E.g.

```
module count(Y, start);
output [3:0] Y;
input start;

reg [3:0] Y;
wire start;
integer i;

initial
        Y = 0;

always @(posedge start)
        for (i = 0; i < 3; i = i + 1)
                #10 Y = Y + 1;
endmodule
```

Procedural Statements: while

while (expr) stmt;

E.g.

```
module count(Y, start);
output [3:0] Y;
input start;

reg [3:0] Y;
wire start;
integer i;

initial
        Y = 0;

always @(posedge start) begin
        i = 0;
        while (i < 3) begin
                #10 Y = Y + 1;
                i = i + 1;
                end
        end
endmodule
```

Procedural Statements: repeat

repeat (times) stmt;

Can be either an integer or a variable

E.g.

```
module count(Y, start);
output [3:0] Y;
input start;

reg [3:0] Y;
wire start;

initial
        Y = 0;

always @(posedge start)
        repeat (4) #10 Y = Y + 1;
endmodule
```

Procedural Statements: forever

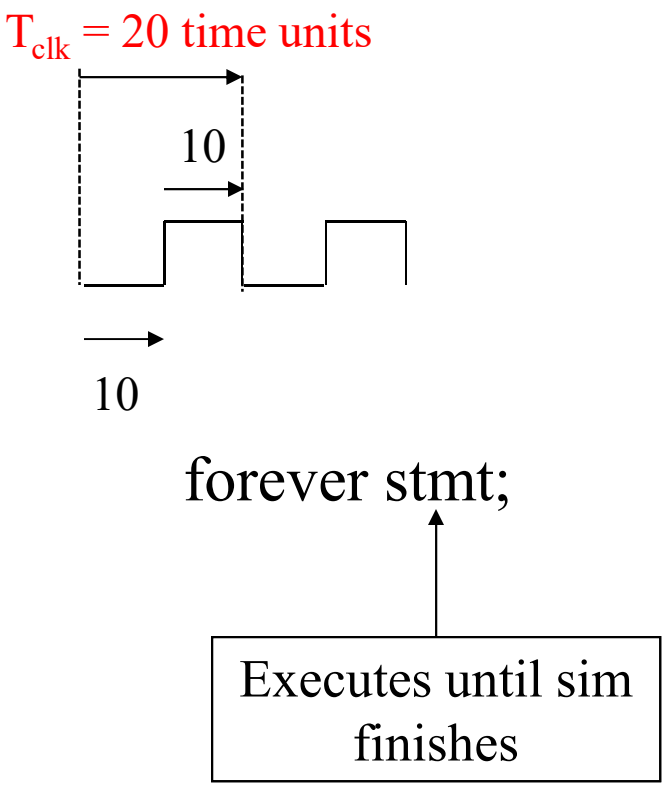

Typical example:

clock generation in test modules

```
module test;

reg clk;

// clock generation
initial begin
        clk = 0;
        forever #10 clk = ~clk;
        end

dff IC1(.clk(clk), .D(D), .Q(Q));
//other_module2 o2(.., clk, ..);

initial begin
        D = 1'b0;//testcase 1
        #100;
        D = 1'b1;//testcase 2
        end
endmodule
```

T_{clk} = 20 time units

Mixed Model

Code that contains various both structure and behavioral styles

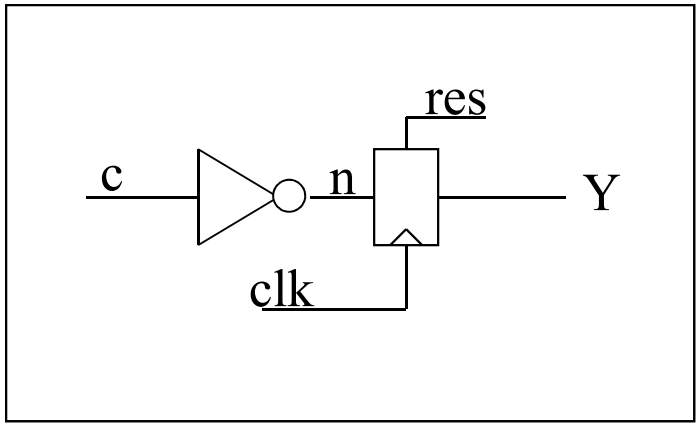


```
module simple(Y, c, clk, res);
output Y;
input c, clk, res;

reg Y;
wire c, clk, res;
wire n;

not(n, c); // gate-level

always @(res or posedge clk)
        if (res)
                Y = 0;
        else
                Y = n;
endmodule
```

Testing Your Modules

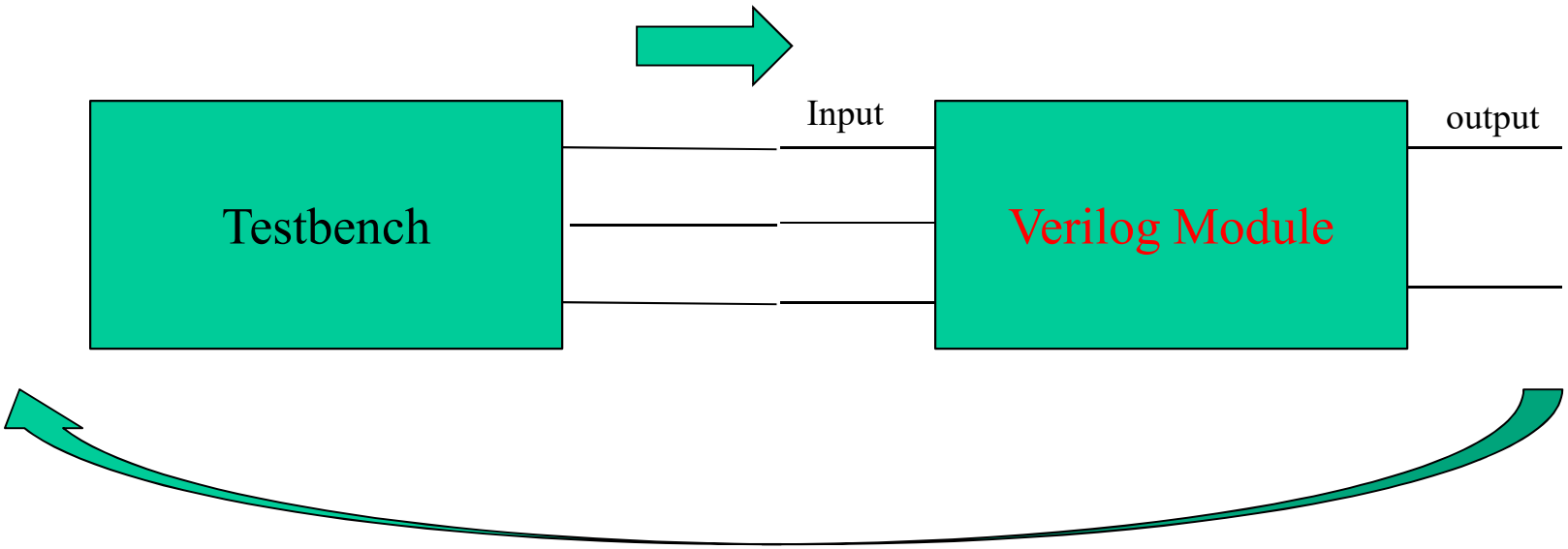

Testing Your Modules

```
module top_test;
wire [1:0] t_out;    // Top's signals
reg [3:0] t_in;
reg clk;

top inst(t_out, t_in, clk); // Top's instance

initial begin        // Generate clock
       clk = 0;
       forever #10 clk = ~clk;
end

initial begin        // Generate remaining inputs
       $monitor($time, " %b -> %b", t_in, t_out);
       #5 t_in = 4'b0101;
       #20 t_in = 4'b1110;
       #20 t_in[0] = 1;
       #300 $finish;
end

endmodule
```

Outline

- Verilog?
- Module
- Instances
- User Identifiers
- Numbers in Verilog
- Signal and Nets in Verilog
- Registers
- Vectors and Arrays
- Logical vs Bitwise Operators
- Conditional Operator
- Continuous Assignments
- Structural Model (Gate Level)
- Behavioral Model – Procedures: Initial vs Always
- Procedural Statements: If – case – for
- System Tasks

System Tasks

Always written inside procedures

- $display("..", arg2, arg3, ..); → much like printf(), displays formatted string in std output when encountered
- $monitor("..", arg2, arg3, ..); → like $display(), but .. displays string each time any of arg2, arg3, .. Changes
- $stop; → suspends sim when encountered
- $finish; → finishes sim when encountered
- $fopen("filename"); → returns file descriptor (integer); then, you can use $fdisplay(fd, "..", arg2, arg3, ..); or $fmonitor(fd, "..", arg2, arg3, ..); to write to file
- $fclose(fd); → closes file
- $random(seed); → returns random integer; give her an integer as a seed

$display & $monitor string format

Format	Display
%d or %D	Display variable in decimal
%b or %B	Display variable in binary
%s or %S	Display string
%h or %H	Display variable in hex
%c or %C	Display ASCII character
%m or %M	Display hierarchical name
%v or %V	Display strength
%o or %O	Display variable in octal
%t or %T	Display in current time format
%e or %E	Display real number in scientific format
%f or %F	Display real number in decimal format
%g or %G	Display scientific or decimal, whichever is shorter

Compiler Directives

- `include "filename" → inserts contents of file into current file; write it anywhere in code ..

- `define <text1> <text2> → text1 substitutes text2;
  - e.g. `define BUS reg [31:0]` in declaration part: `BUS data;`

- `timescale <time unit>/<precision>
  - e.g. `timescale 10ns/1ns` later: `#5 a = b;`

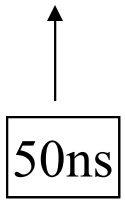

Parameters

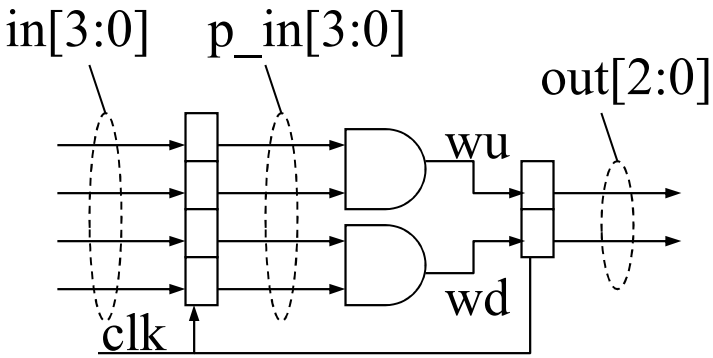

A. Implelementation without parameters

```
module dff4bit(Q, D, clk);
output [3:0] Q;
input [3:0] D;
input clk;

reg [3:0] Q;
wire [3:0] D;
wire clk;

always @(posedge clk)
       Q = D;

endmodule
```

```
module dff2bit(Q, D, clk);
output [1:0] Q;
input [1:0] D;
input clk;

reg [1:0] Q;
wire [1:0] D;
wire clk;

always @(posedge clk)
       Q = D;

endmodule
```

Parameters (ii)

A. Implelementation without parameters (cont.)

```
module top(out, in, clk);
output [1:0] out;
input [3:0] in;
input clk;

wire [1:0] out;
wire [3:0] in;
wire clk;

wire [3:0] p_in;    // internal nets
wire wu, wd;

assign wu = p_in[3] & p_in[2];
assign wd = p_in[1] & p_in[0];

dff4bit instA(p_in, in, clk);
dff2bit instB(out, {wu, wd}, clk);
// notice the concatenation!!

endmodule
```

Parameters (iii)

B. Implelementation
with parameters

```
module dff(Q, D, clk);
parameter WIDTH = 4;
output [WIDTH-1:0] Q;
input [WIDTH-1:0] D;
input clk;

reg [WIDTH-1:0] Q;
wire [WIDTH-1:0] D;
wire clk;

always @(posedge clk)
      Q = D;

endmodule
```

```
module top(out, in, clk);
output [1:0] out;
input [3:0] in;
input clk;

wire [1:0] out;
wire [3:0] in;
wire clk;

wire [3:0] p_in;
wire wu, wd;

assign wu = p_in[3] & p_in[2];
assign wd = p_in[1] & p_in[0];

dff instA(p_in, in, clk);
// WIDTH = 4, from declaration

dff instB(out, {wu, wd}, clk);
      defparam instB.WIDTH = 2;
// We changed WIDTH for instB only

endmodule
```

Outline

- Verilog?
- Module
- Instances
- User Identifiers
- Numbers in Verilog
- Signal and Nets in Verilog
- Registers
- Vectors and Arrays
- Logical vs Bitwise Operators
- Conditional Operator
- Continuous Assignments
- Structural Model (Gate Level)
- Behavioral Model – Procedures: Initial vs Always
- Procedural Statements: If – case – for
- System Tasks
- EXAMPLES

Example Codes

- Yêu cầu:
  - Đọc hiểu 1 đoạn CODE MẪU
  - **Làm lại các bước thiết kế** (xem Video HD các bước làm 1 BT TKVM trên LMS): làm trên giấy + chụp hình hoặc viết file WORD ➔ submit Assignment x
    - Thiết kế SĐK (~sơ đồ nguyên lý)
    - Bản chân trị/bản sự thật
    - Vẽ lưu đồ giải thuật
    - Code lập trình (đã có, ko cần viết lại)
  - **Làm simulation** (xem Video HD sử dụng Xilinx ISE để lập trình RTL và simulation) → OPTIONAL

Encoder - Using if-else Statement

- http://www.asic-world.com/examples/verilog/encoder.html#Encoder_-_Using_if-else_Statement

Encoder - Using case Statement

- http://www.asic-world.com/examples/verilog/encoder.html#Encoder_-_Using_if-else_Statement

Pri-Encoder - Using if-else Statement

- http://www.asic-world.com/examples/verilog/pri_encoder.html#Priority_Encoders

Encoder - Using assign Statement

- http://www.asic-world.com/examples/verilog/pri_encoder.html#Priority_Encoders

Decoder - Using case Statement

- http://www.asic-world.com/examples/verilog/decoder.html#Decoder_-_Using_case_Statement

Mux : Using assign Statement

Mux : Using if Statement

Mux : Using case Statement

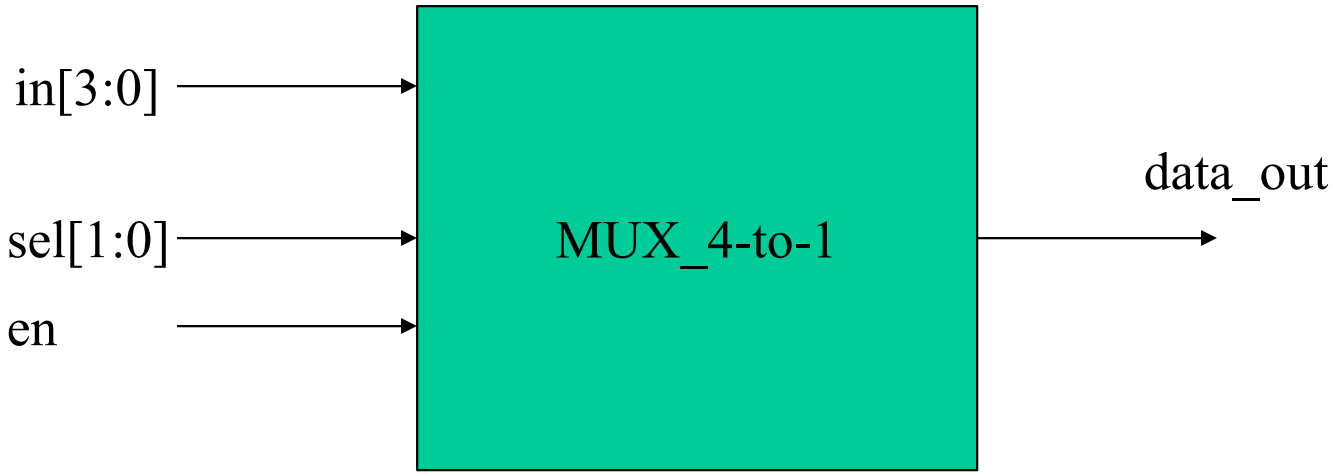
in[3:0]
sel[1:0]
en
MUX_4-to-1
data_out

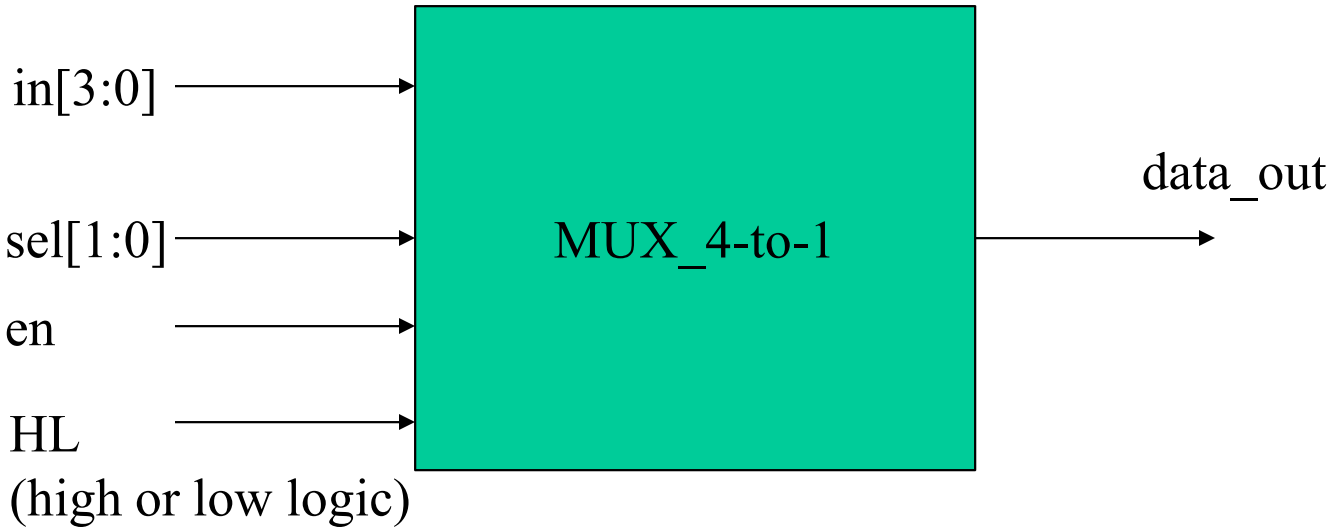
in[3:0]
sel[1:0]
en
HL
(high or low logic)
MUX_4-to-1
data_out

```
module MUX_4-to-1(in, sel, en, HL, data_out);
input [3:0] in;
input [1:0] sel;
input en, HL;
output data_out;
reg temp;
//behavioral model
always @(in ,sel, en, HL)
begin
    if(en)
        begin
            if(sel==2'b00)          temp=in[0];
            else if(sel==2'b01)     temp=in[1];
            else if(sel==2'b10)     temp=in[2];
            else                    temp=in[3];
        end
    else                            temp=1'b0;
end
//continuous assignment
assign data_out = (HL==1'b1)?temp: ~temp;

endmodule
```

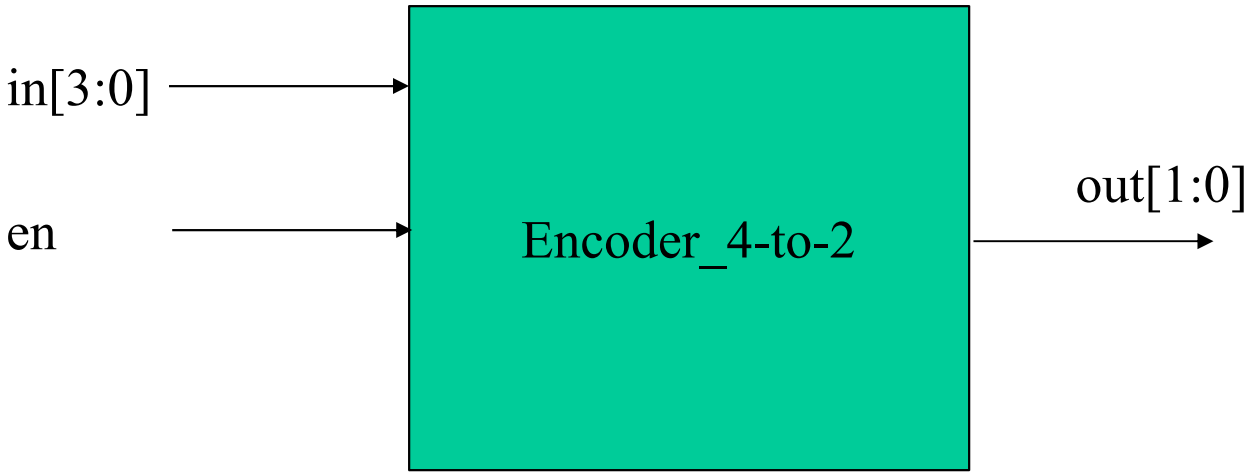

en	in	out
0	x	00
1	1000	00
	0100	01
	0010	10
	0001	11

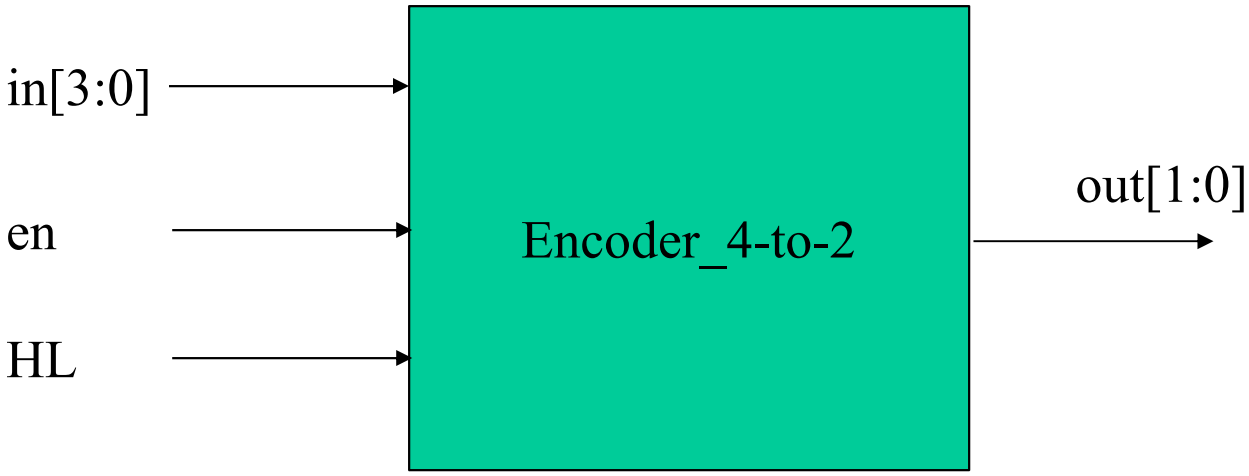

en	in	out	
		HL=1	**HL=0**
0	x	00	11
1	1000	00	11
	0100	01	10
	0010	10	01
	0001	11	00

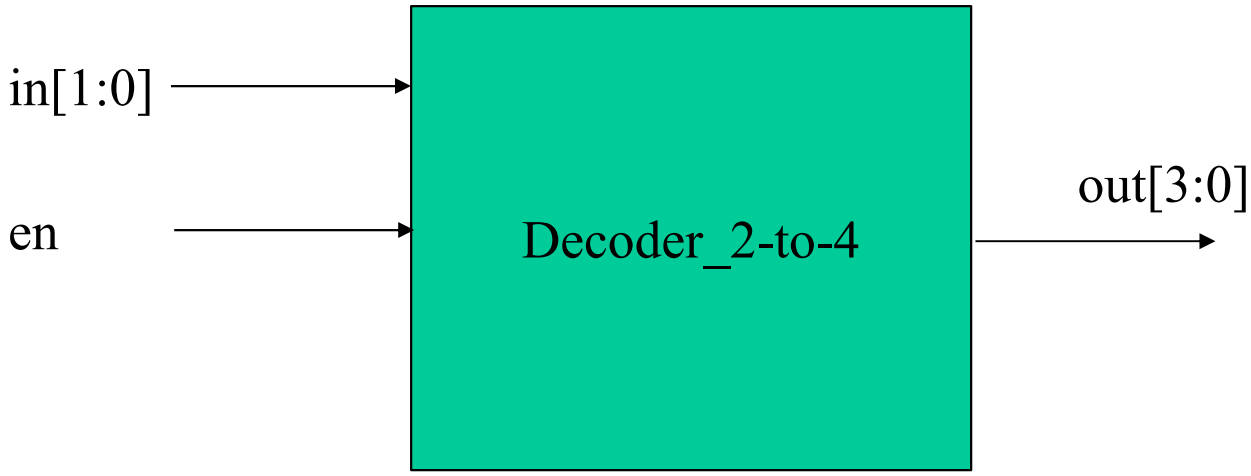

en	in	out
0	xx	0000
1	00	0001
	01	0010
	10	0100
	11	1000

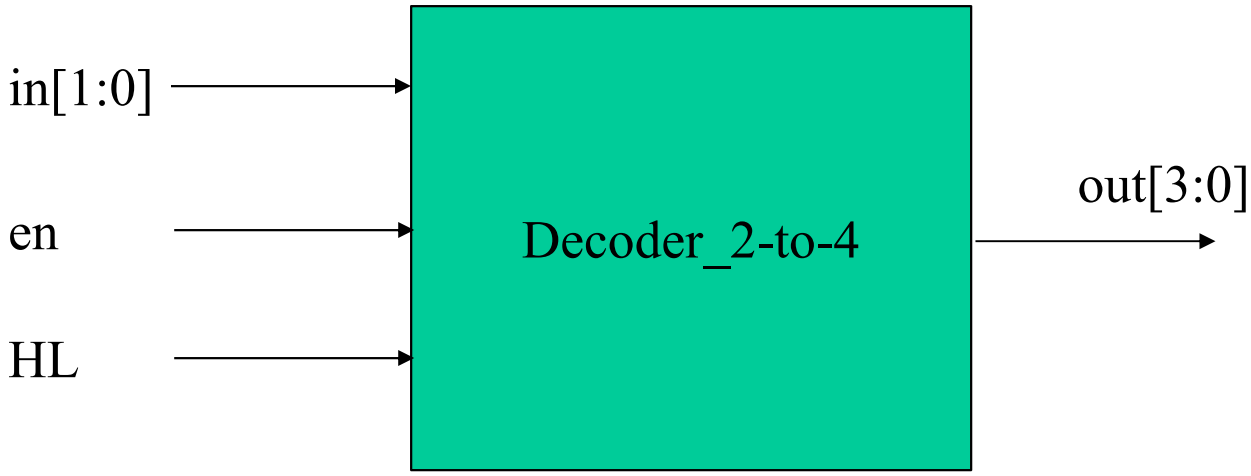

en	in	out	
		HL=1	HL=0
0	xx	0000	1111
1	00	0001	1110
	01	0010	1101
	10	0100	1011
	11	1000	0111

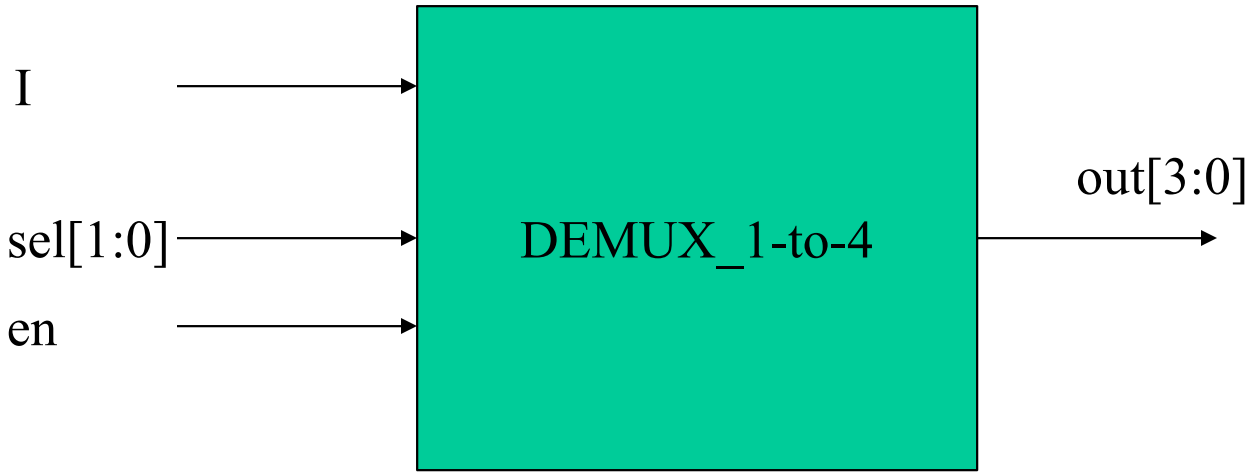

en	sel	out
0	xx	0000
1	00	000I
	01	00I0
	10	0I00
	11	I000