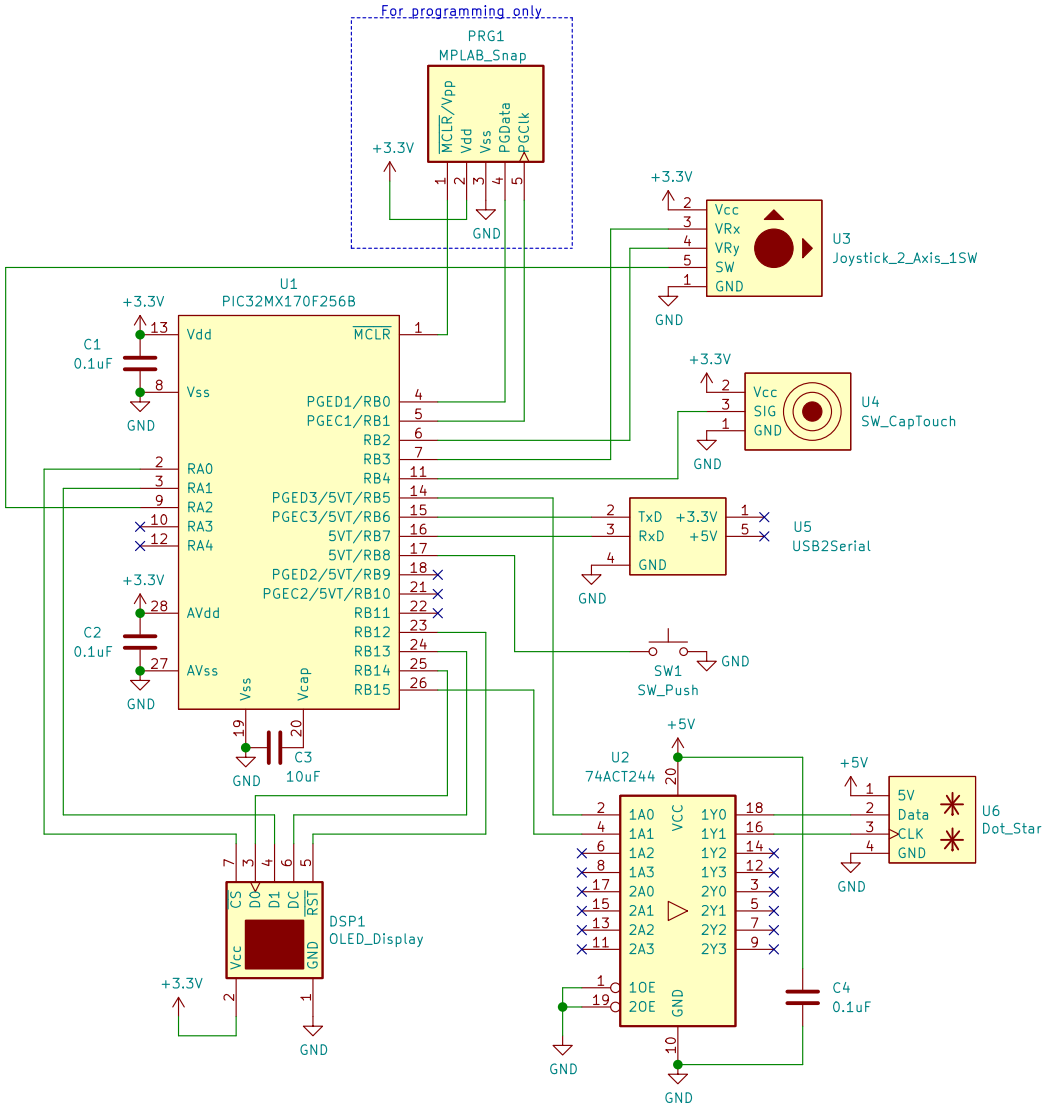

Sheet: /
File: Project Schematic.sch

Title:

Size: A4	Date:	Rev:
KiCad E.D.A. eeschema (5.1.6-0-10_14)		Id: 1/1