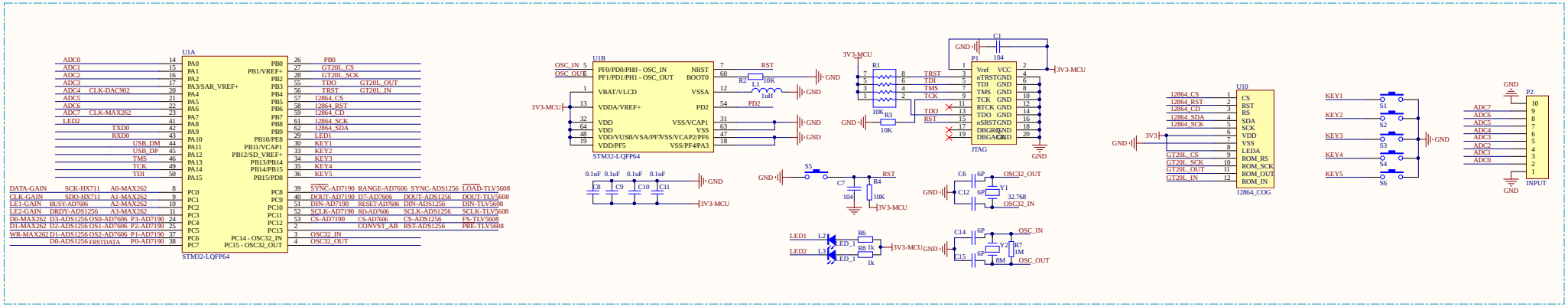

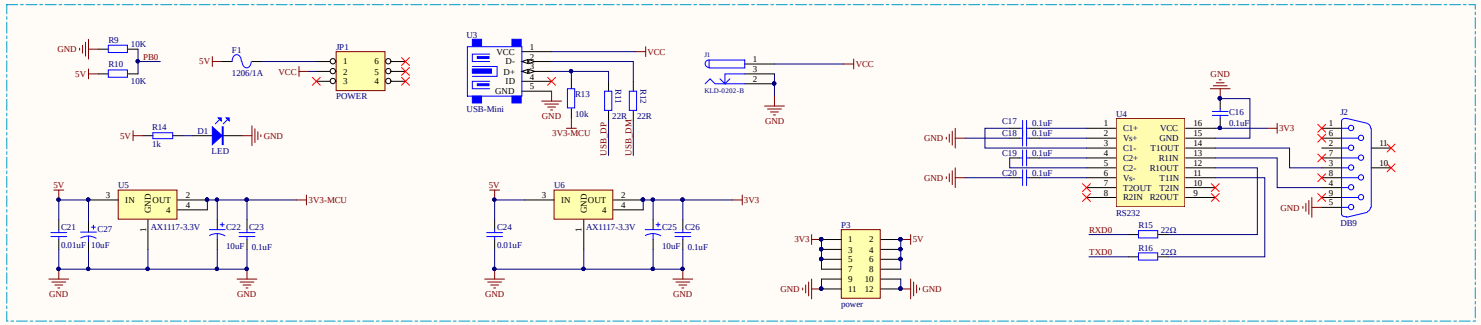

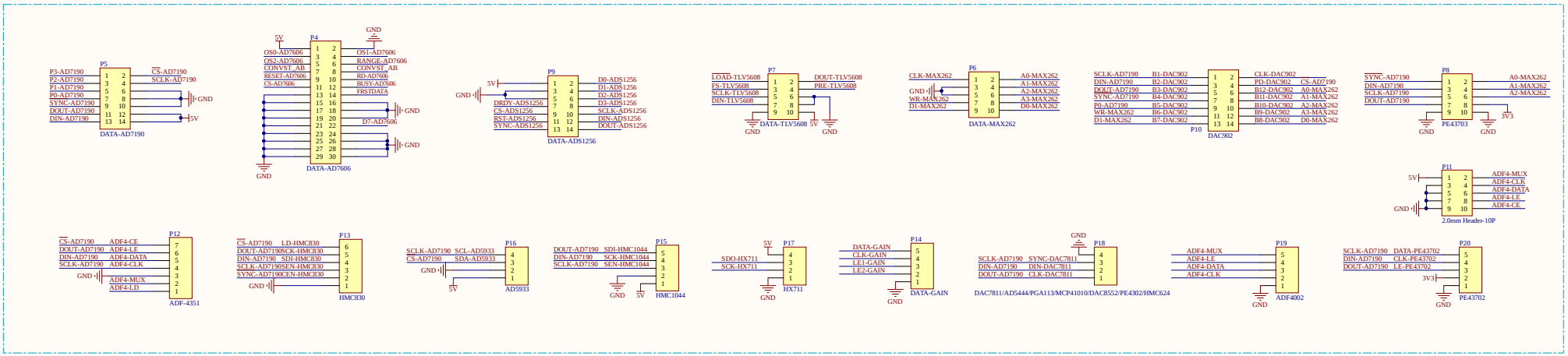

Title:	STM32主控板-数采板驱动板 .SchDoc
Project:	STM32主控板 -数采板驱动板 .PrjPcb
Size: A2	Revision: * / Author: *
Data: 2016/9/19	Company: *

康威科技工作室

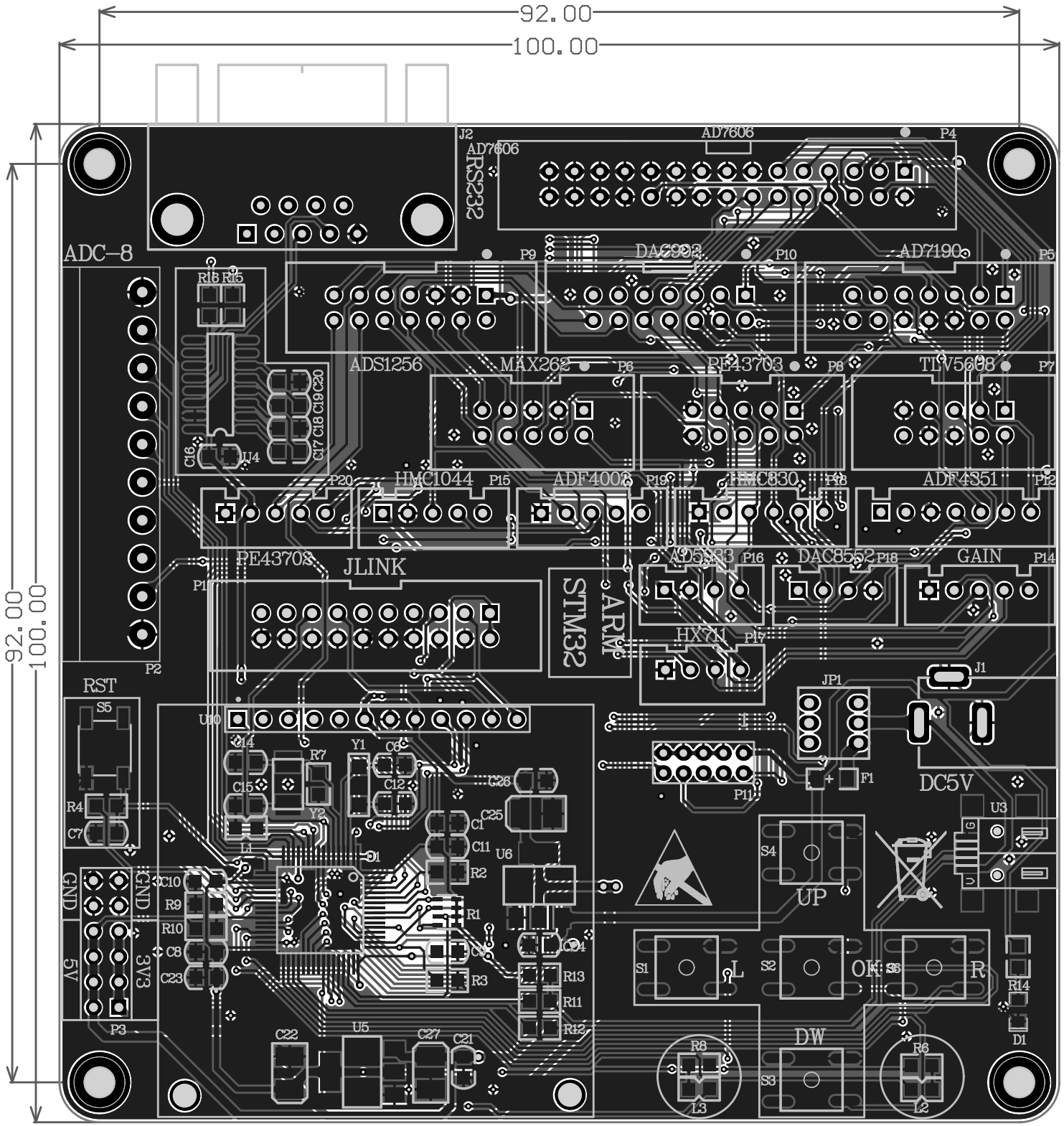
92.00
100.00
92.00
100.00
J2
RS232
AD7606
AD7606
P4
ADC-8
P9
DAC8932
P10
AD7190
P5
R16 R15
ADS1256
MAX262
P6
PE43703
P8
TLV5608
P7
C16
U4
C17 C18 C19 C20
P20
HMC1044
P15
ADF4002
P19
HMC830
P18
ADF4351
P12
PE43708
JLINK
P1
STM32
ARM
AD5933
P16
DAC8552
P18
GAIN
P14
HX711
P17
P2
RST
S5
U10
C14
R7
Y1
C6
C15
C12
C26
R4
C7
Y2
C25
C1
C11
U6
L1
D1
R2
GND
C10
GND
R9
R1
R10
C8
C24
C23
R3
R13
5V
3V3
R11
P3
R12
C22
U5
C27
C21
R8
L3
DW
S3
R6
L2
P11
JP1
J1
F1
DC5V
U3
S4
UP
S1
L
S2
OK
S6
R
R14
D1