1 CRANKCASE

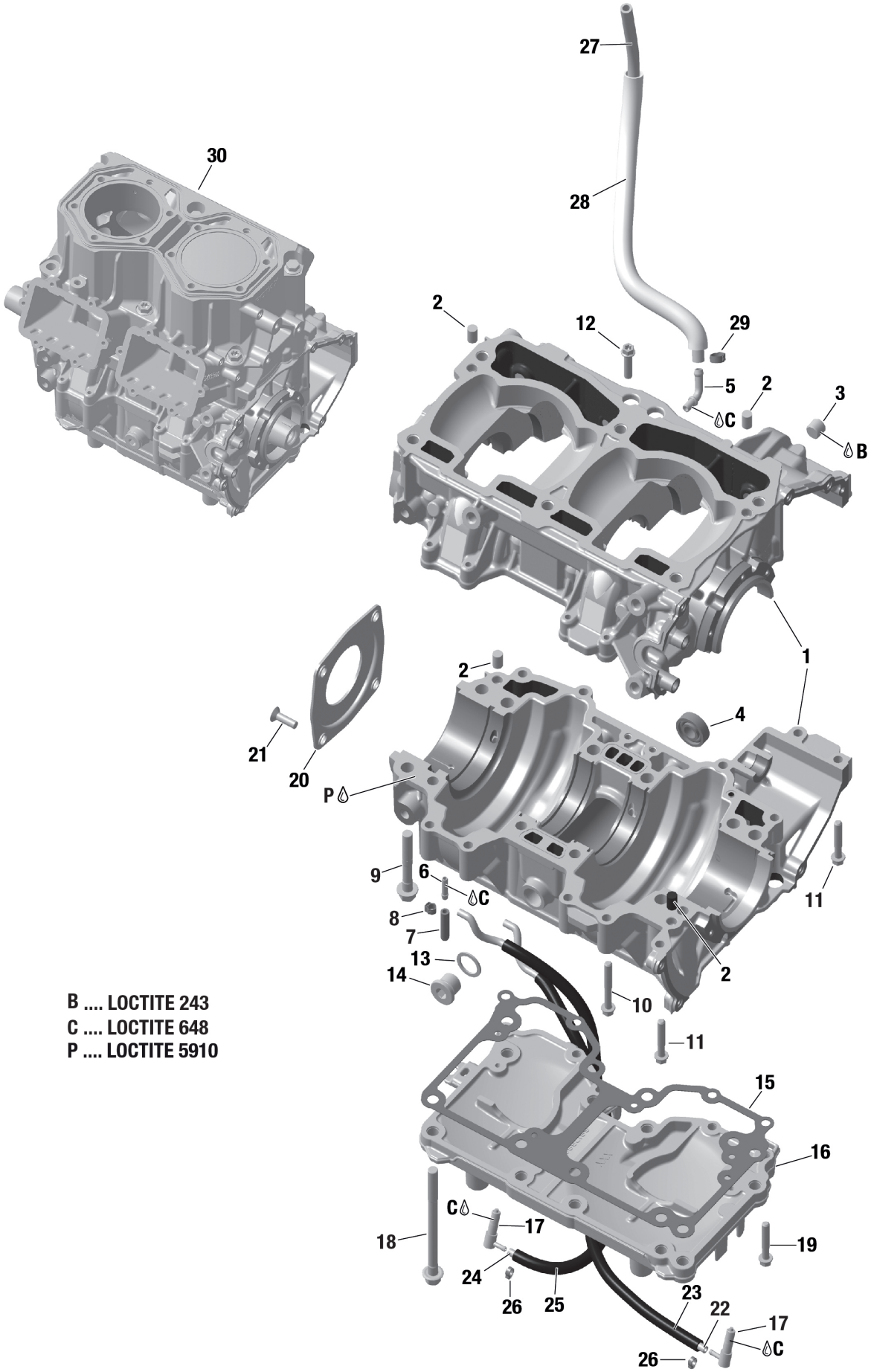

B .... LOCTITE 243
C .... LOCTITE 648
P .... LOCTITE 5910

1 CRANKCASE

#	NEW	PART#	DESCRIPTION	QTY	CHANGE
1		893773	GEHAEUSE KPL. ET Ill. no. 1-6	1	
2		632010	ZYLINDERROLLE 8X12 DIN 5402	4	
3		840658	VERSCHLUSSSCHRAUBE M12x1,5-MK	4	
4		232100	RK-LAGER 6000	1	
5	N	924529	IMPULSKRUEMMER	1	
6		924159	IMPULSNIPPEL	1	
7	N	960771	VERSCHLUSSKAPPE 3,8	1	
8		853138	1-OHR-KLEMME 5,8-7,0 MM	1	
9		941627	SK-BUNDSCHRAUBE M8X56,5 SW 11	2	
10		440324	SK/TORX-BUNDSCHRAUBE M6X45-SW8/T30	7	
11		440274	SK/TORX-BUNDSCHRAUBE M6X35-SW8/T30	4	
12		440234	SK/TORX-BUNDSCHRAUBE M6X25-SW8/T30	2	
13		430622	DICHTRING A 16X22 DIN 7603 Included in gasket kit	1	
14		640457	VERSCHLUSSSCHRAUBE M16X1,5	1	
15		430072	DICHTUNG Included in gasket kit	1	
16	N	812688	GRUNDPLATTE	1	
17		956510	RUECKSCHLAGVENTIL KPL.	2	
18		941517	SK-BUNDSCHRAUBE M8X105 SW 11	10	
19		440274	SK/TORX-BUNDSCHRAUBE M6X35-SW8/T30	4	
20	N	812421	WD RING DECKEL	1	
21		941436	SENKSCHRAUBE M6X20 M. INNENSECHSRUND T30	4	
22		201541	OELLEITUNG 445 +/- 4 MM	1	
23		460042	WELLROHR NW 6 GESCHLITZT 385MM	1	
24		201542	OELLEITUNG 365 +/- 4 MM	1	
25		460045	WELLROHR NW 6 GESCHLITZT 310MM	1	
26		851508	1-OHR-KLEMME 4,7-5,7 MM (06.1 RER)	2	
27		201551	OELLEITUNG 310 +/- 4 MM	1	
28		460047	SCHUTZSCHLAUCH NW 10 240MM	1	
29		853653	1-OHR-KLEMME 8,3-10 MM	1	
30	N	300084903	BLOCKMOTOR 849 SQUARE ICE MY19 390849240; 390849294; 390849296	1	
31	N	300084911	BLOCKMOTOR 849 SQUARE SHOT ICE MY19 engine versions 390849250; 390849295	1	

2 CRANKSHAFT

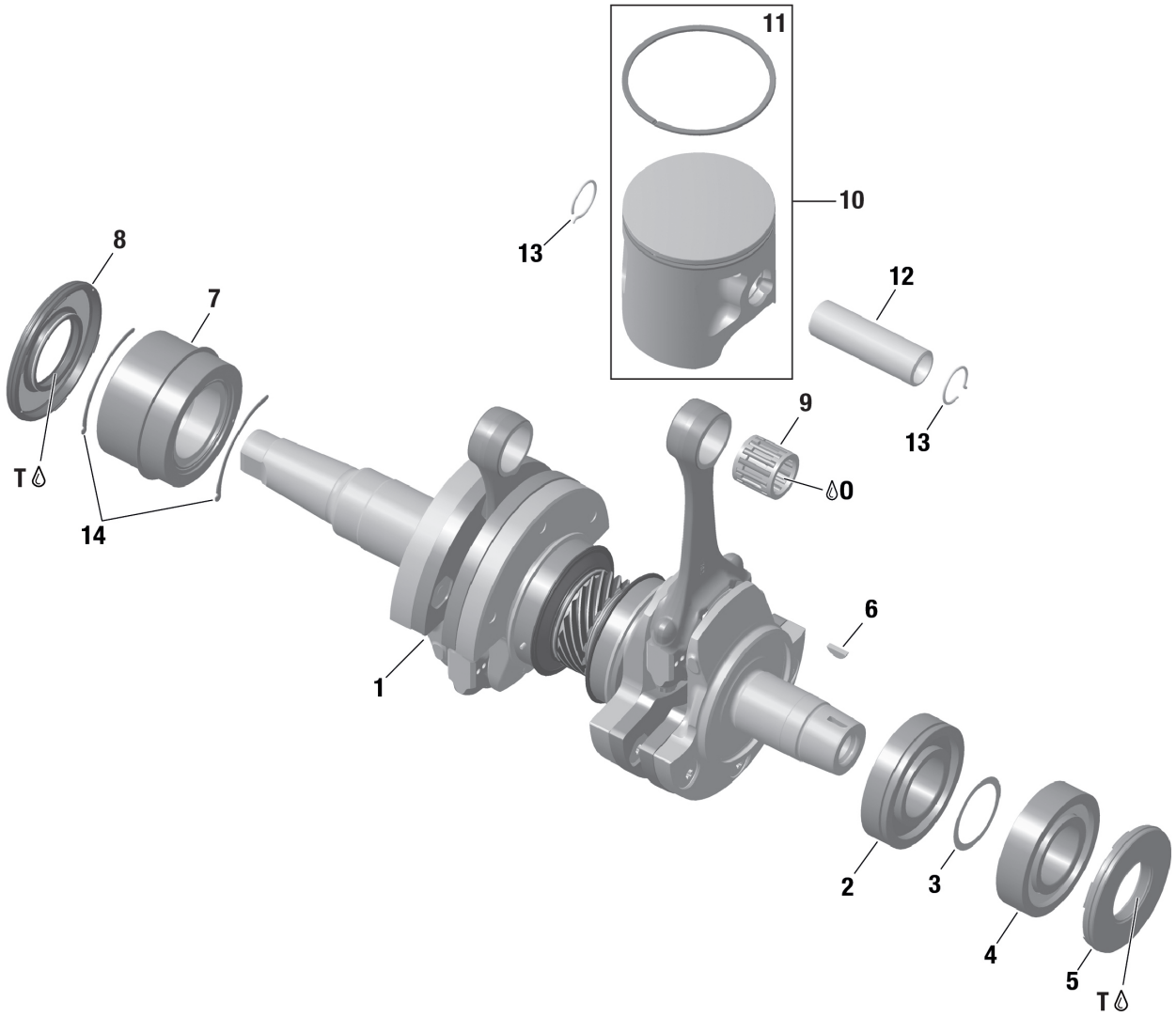

O .... ENGINE OIL
T .... KLUEBER PETAMO GHY 133

2 CRANKSHAFT

#	NEW	PART#	DESCRIPTION	QTY	CHANGE
1	N	893787	KURBELWELLE KPL. Ill. no. 1-6	1	
2		832178	RK-LAGER 6207	1	
3		927401	AUSGLEICHSCHEIBE 35,4/43/0,2	1	
4		832575	RK-LAGER 6207 RALU 0,041 BIS 0,051	1	
5		831955	WD-RING AS 35X72X7/8 FPM Included in gasket kit	1	
6		246015	SCHEIBENFEDER 3X5 DIN 6888	1	
7		832130	ZYLINDERROLLENLAGER 40X72X43,5	1	
8		931284	WD-RING AS 40X80X8 FPM Included in gasket kit	1	
9		832030	KOLBENBOLZENKAEFIG 21X27X25	2	
10		893791	KOLBEN KPL. 81,852 MM Ill. no. 10-11	2	
11		815416	ET-RING 82x75,4x1,925 CrN	2	
12		916480	KOLBENBOLZEN 21x13x67,8	2	
13		845467	EINHAKENRING 21 Included in gasket kit	4	
14		953130	EINSTELLPLAETTCHEN 0,5	0.01	
14		953131	EINSTELLPLAETTCHEN 0,75	0.01	
14		953132	EINSTELLPLAETTCHEN 1,0	0.01	
14		953133	EINSTELLPLAETTCHEN 1,25	0.01	
14		953134	EINSTELLPLAETTCHEN 1,5	0.01	
15		481410	EINSTELLPLAETTCHEN SATZ	1	

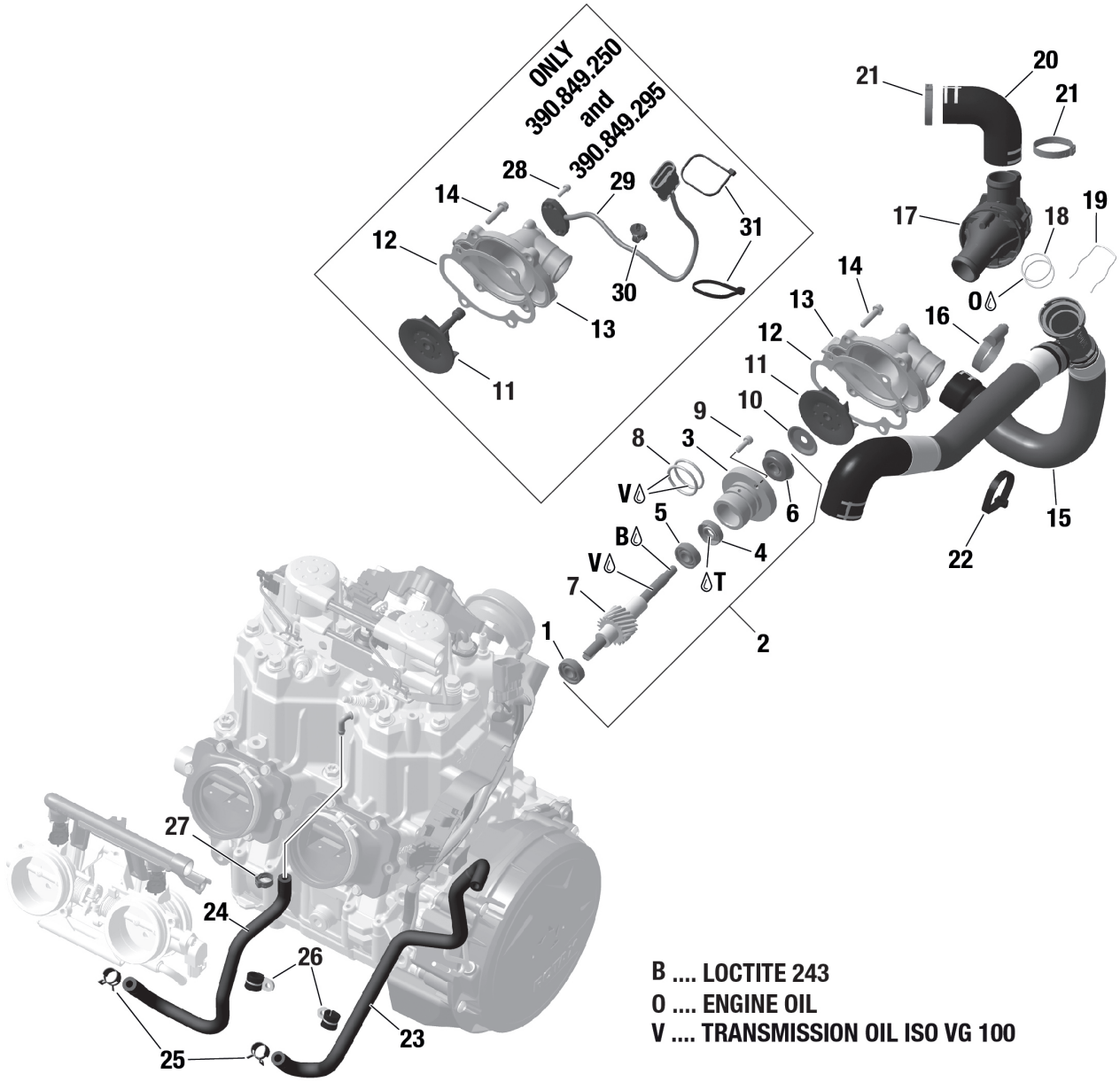
ONLY
390.849.250
and
390.849.295
1
2
3
4
5
6
7
8
9
10
11
12
13
14
15
16
17
18
19
20
21
22
23
24
25
26
27
28
29
30
31
V
B
V
T
O
B .... LOCTITE 243
O .... ENGINE OIL
V .... TRANSMISSION OIL ISO VG 100

3 COOLING

#	NEW	PART#	DESCRIPTION	QTY	CHANGE
1		< --- >	BALL BEARING 6000 10-26-8 See crankcase, chapter 1, item 4	1	
2		891478	MODUL RITZELWELLE 598/849Shot engine versions 390849250; 390849295	1	
2		891479	MODUL RITZELWELLE 598/849 engine versions 390849230; 390849293; 390849240; 390849294; 390849296	1	
3		847933	STUFENHUELSE	1	
4		230198	WD-RING G 10 x 22 x 7 NBR Included in gasket kit	1	
5		232100	RK-LAGER 6000	1	
6		650370	GLEITRINGDICHTUNG Included in gasket kit	1	
7		837678	RITZELWELLE 18Z 390849240; 390849294; 390849296	1	
7		837680	RITZELWELLE 17Z engine versions 390849250; 390849295	1	
8		950890	O-RING DIN 3771-30X3-N, NBR 70 Included in gasket kit	2	
9		840514	ZYL.SCHRAUBE ISO 4762 - M5x16 - 8.8	2	
10		944035	ABDECKSCHEIBE	1	
11		922806	LAUFRAD engine versions 390849250; 390849295	1	
11		922808	LAUFRAD 390849240; 390849294; 390849296	1	
12		430053	DICHTUNG Included in gasket kit	1	
13	N	822286	WASSERPUMPENGEHAEUSE 390849240; 390849294; 390849296	1	
13	N	822288	WASSERPUMPENGEHAEUSE engine versions 390849250; 390849295	1	
14		440234	SK/TORX-BUNDSCHRAUBE M6X25-SW8/T30	4	
15	N	822803	FORMSCHLAUCH KPL.	1	
16		251221	SCHLAUCHSCHELLE 40/15	1	
17	N	822835	THERMOSTATGEHAEUSE KPL. Ill. no. 17-18	1	
18	N	430062	O-RING DIN 3771-26,7X1,78-N, EPDM291 Included in gasket kit	2	
19		939344	FEDERBUEGEL	1	
20		822820	KUEHLWASSERSCHLAUCH ABLAUF	1	
21		951123	1-OHR-KLEMME 34,9-38,1 MM	2	

3 COOLING

#	NEW	PART#	DESCRIPTION	QTY	CHANGE
22		866716	KABELBINDER 203X7,6 MM	1	
23		201516	FORMSCHLAUCH	1	
24		201512	FORMSCHLAUCH	1	
25		853511	FEDERBANDSCHELLE 14	2	
26		851250	ROHRSCHELLE 15/M5	2	
27		851458	1-OHR-KLEMME 12,3-14,8 MM	1	
28		440292	ZYL.SCHRAUBE ISO 4762 - M4x12 - 8.8 engine versions 390849250; 390849295	2	
29		864400	WINKELSENSOR engine versions 390849250; 390849295	1	
30		951341	KABELBINDER MIT HALTER 202X4,6 engine versions 390849250; 390849295	1	
31		651815	KABELBINDER 198x3,5 MM T30L WB3P engine versions 390849250; 390849295	2	

3 COOLING

4 CYLINDER

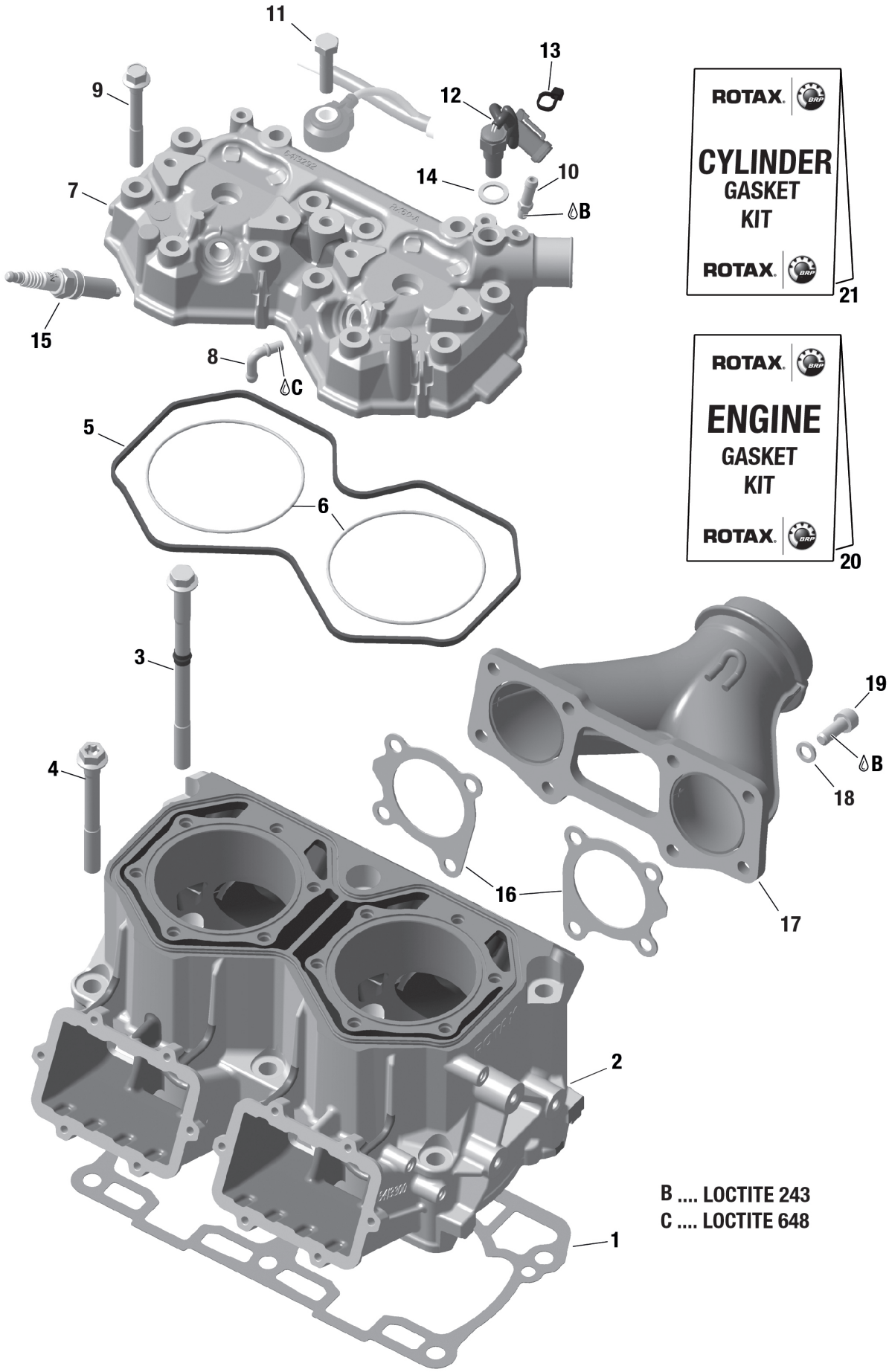
11
13
9
12
14
10
7
B
15
8
C
5
6
3
4
19
B
18
16
17
2
1
ROTAX
CYLINDER
GASKET
KIT
ROTAX
21
ROTAX
ENGINE
GASKET
KIT
ROTAX
20
B .... LOCTITE 243
C .... LOCTITE 648

4 CYLINDER

#	NEW	PART#	DESCRIPTION	QTY	CHANGE
1		831020	DOPPELDICHTUNG 0,5 Included in gasket kit	0.01	
1		831021	DOPPELDICHTUNG 0,6 Included in gasket kit	0.01	
1		831022	DOPPELDICHTUNG 0,7 Included in gasket kit	0.01	
1		831023	DOPPELDICHTUNG 0,8 Included in gasket kit	0.01	
1		831024	DOPPELDICHTUNG 0,9 Included in gasket kit	0.01	
2		413304	ZYLINDERBLOCK PLASMA	1	
3		641762	SK-BUNDSCHRAUBE M10X150 SW13	3	
4		441187	SK/TORX-BUNDSCHRAUBE M10X90-SW13/T50	3	
5		430042	FORMDICHTUNG Included in gasket kit	1	
6		931410	O-RING AEHNL. DIN 3771-89X2-N, FPM 75 Included in gasket kit	2	
7	N	413293	ZYLINDERKOPF	1	
8		924523	IMPULSKRUEMMER	1	
9		640954	SK-BUNDSCHRAUBE M8X68,5 SW 11	12	
10		924724	SCHLAUCHNIPPEL 6,75/2	1	
11		940492	SK-SCHRAUBE ISO 4014 - M8x35 - 8.8	1	
12		664508	TEMPERATURGEBER	1	
13	N	651815	KABELBINDER 198x3,5 MM T30L WB3P	1	
14		250015	DICHTRING A12X18 DIN 7603	1	
15		297948	ZUENDKERZE 12 ILKR8Q7/01	2	
16		430486	DICHTUNG Included in gasket kit	2	
17		873030	AUSPUFFKRUEMMER KPL.	1	
18		427290	SCHEIBE 8,33/13,25/2	8	
19		841051	ZYL.SCHRAUBE M8X22 DIN 912 MK	8	
20		894268	DICHTUNGSSATZ MOTOR	1	
21		894260	DICHTUNGSSATZ ZYLINDER	1	

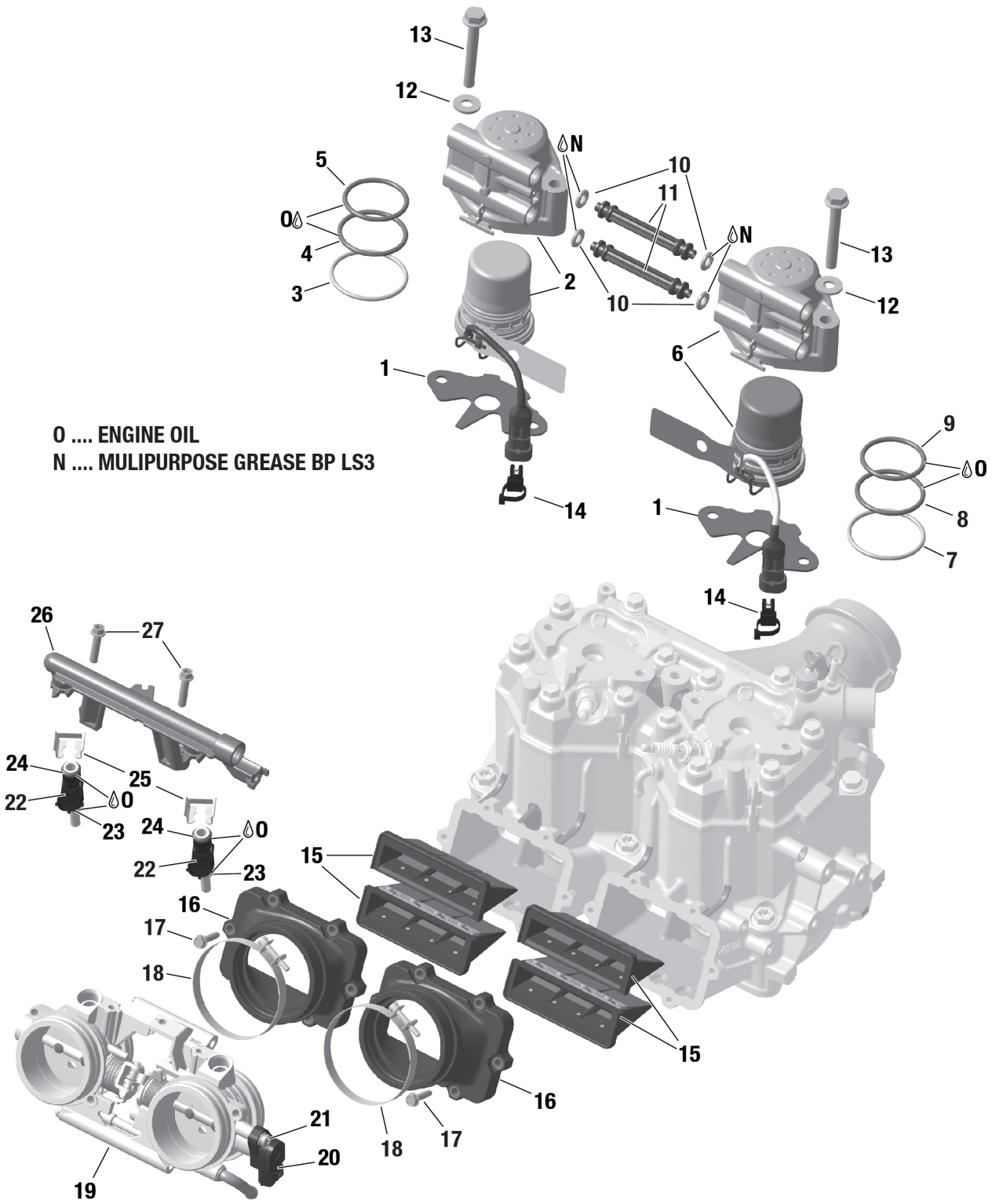
13
12
N
5
10
11
O
4
N
13
3
2
10
12
6
1
O .... ENGINE OIL
N .... MULIPURPOSE GREASE BP LS3
9
O
14
1
8
7
14
26
27
24
25
22
O
23
24
O
22
23
15
16
17
18
15
16
21
18
17
20
19

5 EFI

#	NEW	PART#	DESCRIPTION	QTY	CHANGE
1	N	430056	DICHTUNG Included in gasket kit	2	
2	N	874863	EINSPRITZVENTIL KPL. AS Ill. no. 2-5	1	
3		< --- >	CRUSH RING "BRP P/N 415129497 Always install new crush ring Included in gasket kit"	1	
4		< --- >	O-RING 44,04x3,53 FPM ORANGE BRP P/N 415129498 Included in gasket kit	1	
5		< --- >	O-RING 40,87x3,53 FPM BLUE BRP P/N 415129499 Included in gasket kit	1	
6	N	874864	EINSPRITZVENTIL KPL. MS Ill. no. 6-9	1	
7		< --- >	CRUSH RING "BRP P/N 415129497 Always install new crush ring Included in gasket kit"	1	
8		< --- >	O-RING 44,04x3,53 FPM ORANGE BRP P/N 415129498 Included in gasket kit	1	
9		< --- >	O-RING 40,87x3,53 FPM BLUE BRP P/N 415129499 Included in gasket kit	1	
10		430775	O-RING AS 568 - 7,52X3,53 FVMQ 60 Included in gasket kit	4	
11		874190	VERBINDUNGSROHR	2	
12		901550	SCHEIBE 8,4/20/2	4	
13		840096	SK-SCHRAUBE - EN 1665 - M8X60 - 12.9	4	
14		951785	KABELBINDER MIT HALTER 148X3,6	2	
15		924798	VENTILTRAEGER KPL.	4	
16		867390	ANSAUGSTUTZEN	2	
17		841550	TAPTITE-SCHRAUBE M5X22	12	
18		251209	SCHLAUCHSCHELLE 73	2	
19		893802	DROSSELKLAPPENSTUTZEN KPL. Ill. no. 19-21	1	
20		866680	DROSSELKLAPPENPOTENTIOMETER Ill. no. 20-21	1	
21		< --- >	SCREW Not available as single spare part	1	
22		874842	EINSPRITZVENTIL DEKA VII Ill. no. 22-24	2	
23		431890	O-RING 8,54X3,1 VITON B70 Included in gasket kit	2	
24	N	430775	O-RING AS 568 - 7,52X3,53 FVMQ 60	2	

5 EFI

#	NEW	PART#	DESCRIPTION	QTY	CHANGE
			Included in gasket kit		
25		853030	DUESENHALTER	2	
26		874155	KRAFTSTOFFVERTEILER	1	
27		440234	SK/TORX-BUNDSCHRAUBE M6X25-SW8/T30	2	

5 EFI

6 RAVE

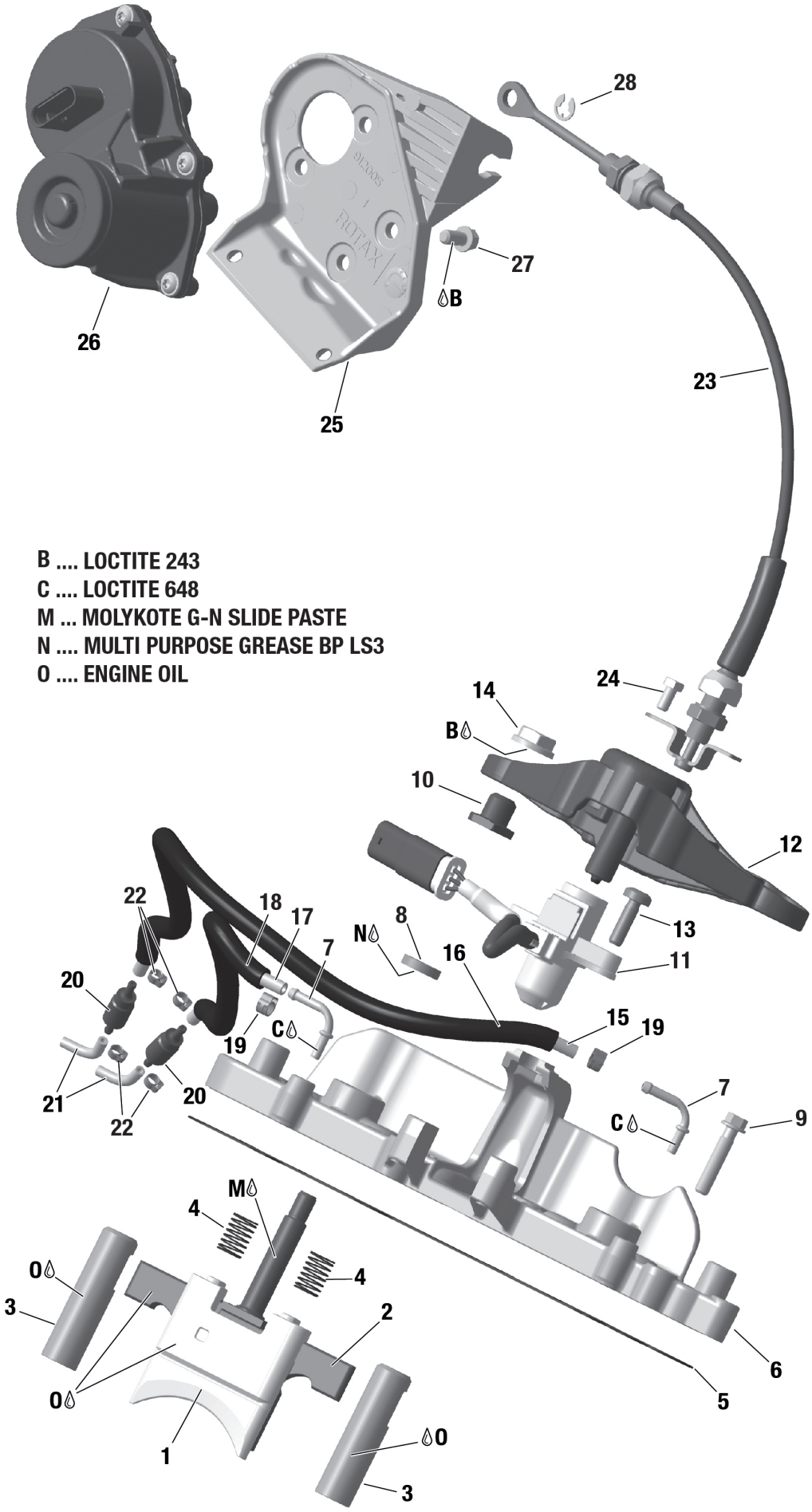
28
27
B
26
25
23
B .... LOCTITE 243
C .... LOCTITE 648
M ... MOLYKOTE G-N SLIDE PASTE
N .... MULTI PURPOSE GREASE BP LS3
O .... ENGINE OIL
24
14
B
10
12
13
11
22
18
17
7
N
8
16
20
15
19
C
19
21
22
20
7
C
9
M
4
4
O
3
2
6
O
5
1
O
3

6 RAVE

#	NEW	PART#	DESCRIPTION	QTY	CHANGE
1		954051	AUSLASSSCHIEBER OBEN	2	
2		954057	AUSLASSSCHIEBER UNTEN	2	
3		954040	AUSLASSSCHIEBER	4	
4		238558	DRUCKFEDER DM10,3 D0,70 L35	4	
5		430036	DICHTUNG Included in gasket kit	1	
6		954038	SCHIEBERSTANGENFUEHRUNG KPL. Ill. no. 6-7	1	
7		924051	IMPULSKRUEMMER	2	
8		950732	NUTRING NI SF 10X17X4 FKM Included in gasket kit	2	K181008
9		440647	SK/TORX-BUNDSCHRAUBE M6X30-SW8/T30	4	
10		942331	BUNDMUTTER M8	2	
11		855295	SCHIEBERSCHIENE MIT WEGSENSOR Ill. no. 11-12	1	
11		< --- >	POSITION SENSOR POSITION SENSOR	1	
12		< --- >	VALVE BAR VALVE BAR	1	
13		441386	TORX-GF-SCHRAUBE 6X20	2	
14		942190	BUNDMUTTER M12X1,5	2	
15	N	201559	OELLEITUNG 385 +/- 4 MM	1	
16	N	460056	WELLROHR NW 6 GESCHLITZT 359MM 0/-4MM	1	
17	N	201554	OELLEITUNG 185 +/- 4 MM	1	
18	N	460055	WELLROHR NW 6 GESCHLITZT 165MM	1	
19		853138	1-OHR-KLEMME 5,8-7,0 MM	2	
20		956515	RUECKSCHLAGVENTIL KPL.	2	
21	N	201547	OELLEITUNG 25 +/- 2 MM	2	
22		851508	1-OHR-KLEMME 4,7-5,7 MM (06.1 RER)	4	
23		997033	RAVESEILZUG KPL.	1	
24		< --- >	HEX. SCREW M5X10 DIN933 BRP P/N TBD	1	
25		912005	TRAEGERPLATTE	1	
26		889431	STELLMOTOR	1	
27		440149	SK/TORX-BUNDSCHRAUBE M6X12-SW8/T30 MK	4	
28		945710	SICHERUNGSSCHEIBE DIN 6799-5	1	

7 MAGNETO

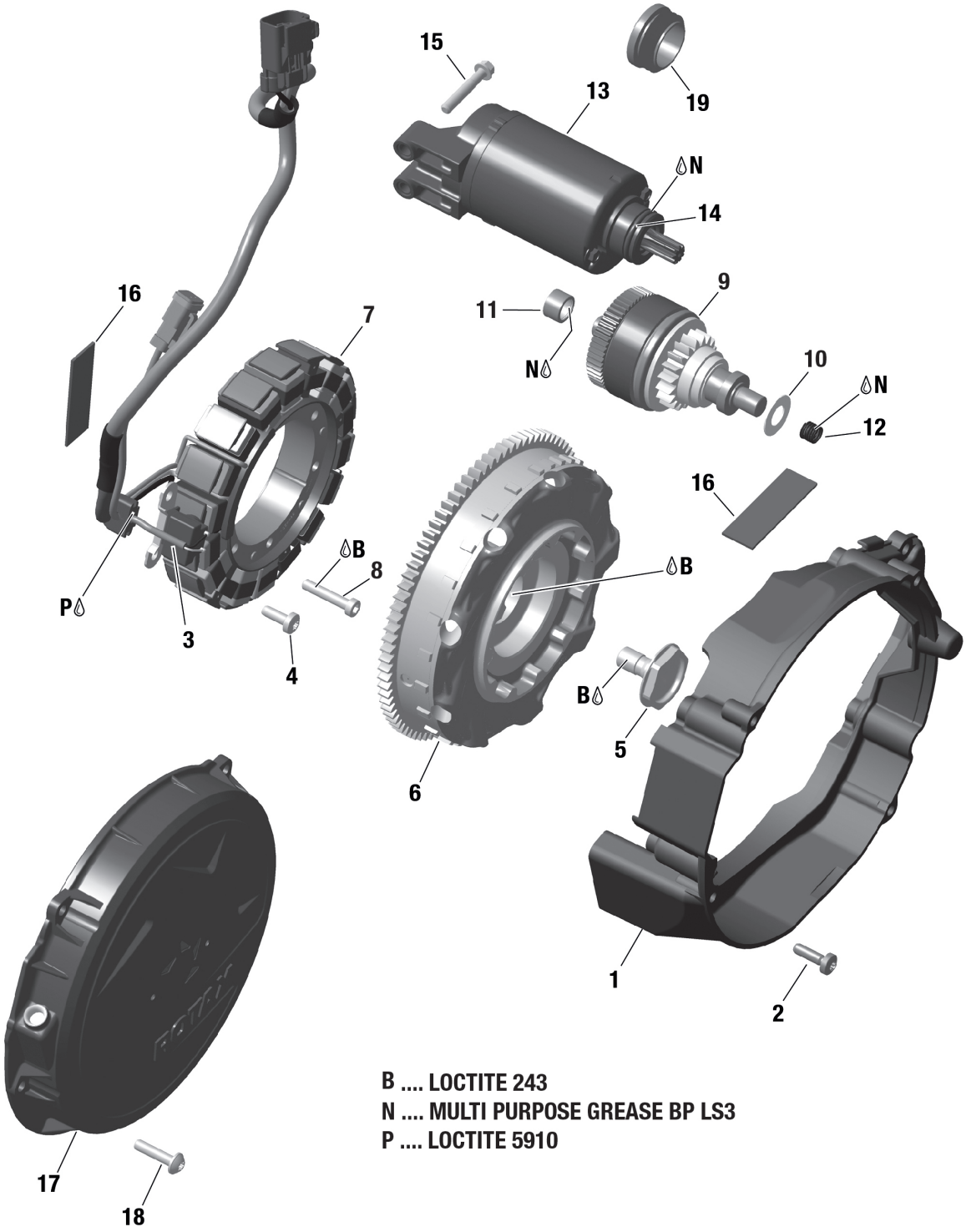
15
13
19
N
14
16
7
11
9
N
10
N
12
16
B
8
B
P
3
4
B
5
6
1
2
17
18
B .... LOCTITE 243
N .... MULTI PURPOSE GREASE BP LS3
P .... LOCTITE 5910

7 MAGNETO

#	NEW	PART#	DESCRIPTION	QTY	CHANGE
1		911850	ZUENDERGEHAEUSE	1	
2		441386	TORX-GF-SCHRAUBE 6X20	8	K181010
3		966841	AUSSENGEBER KPL.	1	
4		840851	SK-BUNDSCHRAUBE M12x1,5x25 MK	1	K181010
5		864431	MAGNETRAD 390849240; 390849294; 390849296	1	K181010
5		864435	MAGNETRAD engine versions 390849250; 390849295	1	K181010
6		864420	STATOR KPL. 55V/1300W	1	K181010
7		540000	ZYL.SCHRAUBE DIN 6912 - M6x30 - 8.8	6	K181010
8		888047	STARTERGETRIEBE KPL. 390849296	1	K181010
9		827261	ANLAUFSCHEIBE 12,5/21,5/1 390849296	1	K181010
10		232482	NADELHUELSE 12X16X10 HK1210 B 390849296	1	K901010
11		938204	DRUCKFEDER DM 9 D1,2 L17,5 390849296	1	K181010
12		893820	E-STARTER KPL. engine versions 390849240; 390849294; 390849296	1	K181010
13		250141	O-RING 24,4X3,1 ACM BROWN 390849296	1	K181010
14		440274	SK/TORX-BUNDSCHRAUBE M6X35-SW8/T30 390849296	2	K181010
15		201360	KLEBESTREIFEN 1.6MM X 20MM X 60MM TC	2	K181010
16		912125	STARTERGEHAEUSE engine versions 390849240; 390849294	1	K181010
17		940431	PLASTITE-SCHRAUBE 6X25	4	K181010
18	N	201930	VERSCHLUSSSTOPFEN 30 engine versions 390849240; 390849294	1	K181010

8 REWIND STARTER

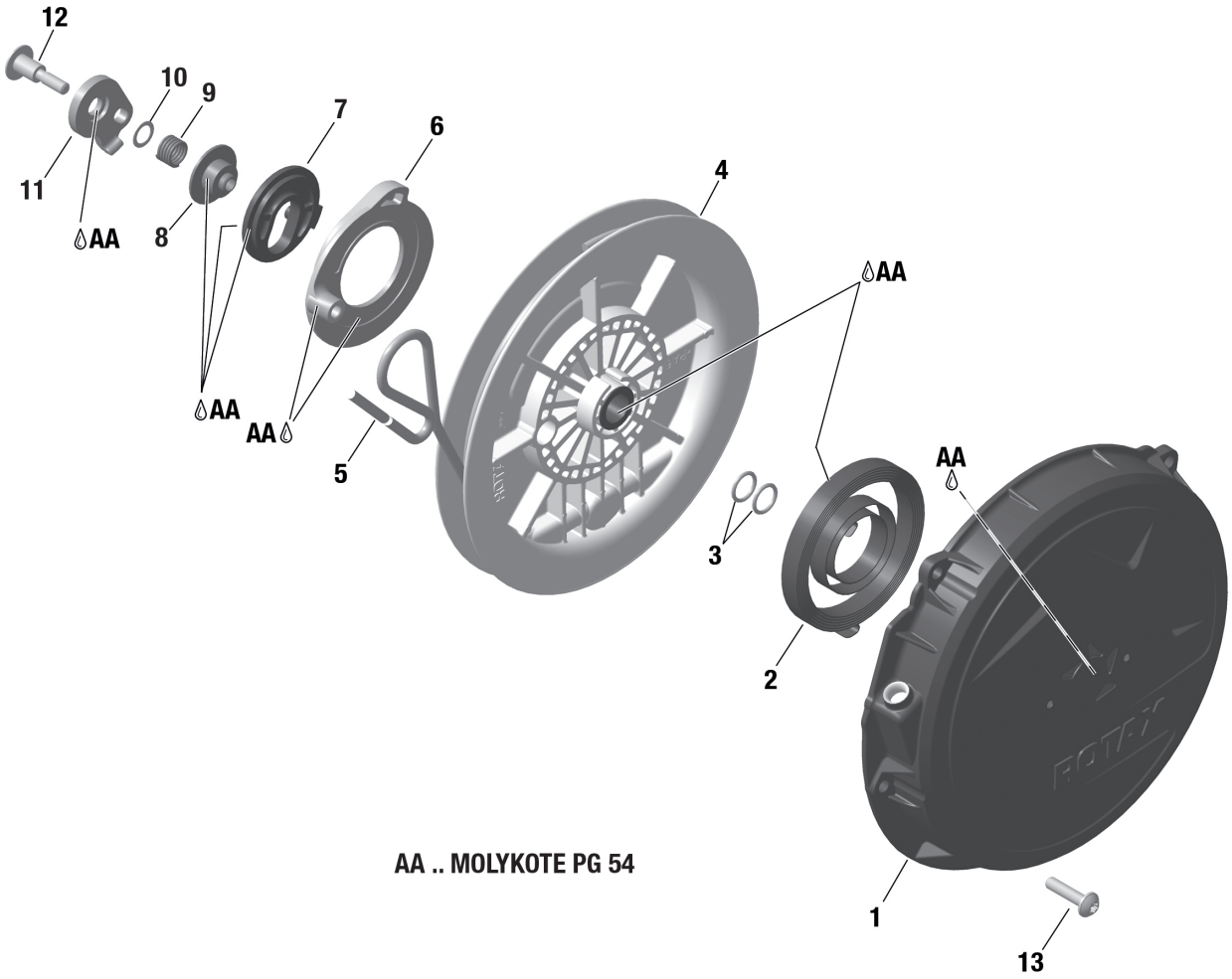

AA .. MOLYKOTE PG 54

8 REWIND STARTER

#	NEW	PART#	DESCRIPTION	QTY	CHANGE
1	N	893762	RUECKHOLSTARTER KPL. engine versions 390849230; 390849293; 390849250; 390849295; 390849296	1	
1		912121	STARTERGEHAEUSE 390849250; 390849295; 390849296	1	
2		939115	RUECKHOLFEDER MIT PAPPE-BRIDE 390849250; 390849295; 390849296	1	
3		950811	O-RING DIN 3771-12X2-VITON 70 SHORE 390849250; 390849295; 390849296	2	
4		852015	SEILSCHEIBE MIT BUNDBUECHSE KPL. 390849250; 390849295; 390849296	1	
5		852650	ANWERFSCHNUR 4,5 390849250; 390849295; 390849296	1	
6	N	852636	MITNEHMER 390849250; 390849295; 390849296	1	
7		852640	MITNEHMERSPERRE 390849250; 390849295; 390849296	1	
8		847928	STUFENHUELSE 390849250; 390849295; 390849296	1	
9		238962	DRUCKFEDER DM11,6 D1,6 L16 390849250; 390849295; 390849296	1	
10		227948	ANLAUFSCHEIBE 9,3/13,5/0,5 390849250; 390849295; 390849296	1	
11	N	852523	SPERRHEBEL 390849250; 390849295; 390849296	1	
12		440502	LAGERSCHRAUBE M6X12,5 390849250; 390849295; 390849296	1	
13		940431	PLASTITE-SCHRAUBE 6X25	4	

9 WIRING HARNESS

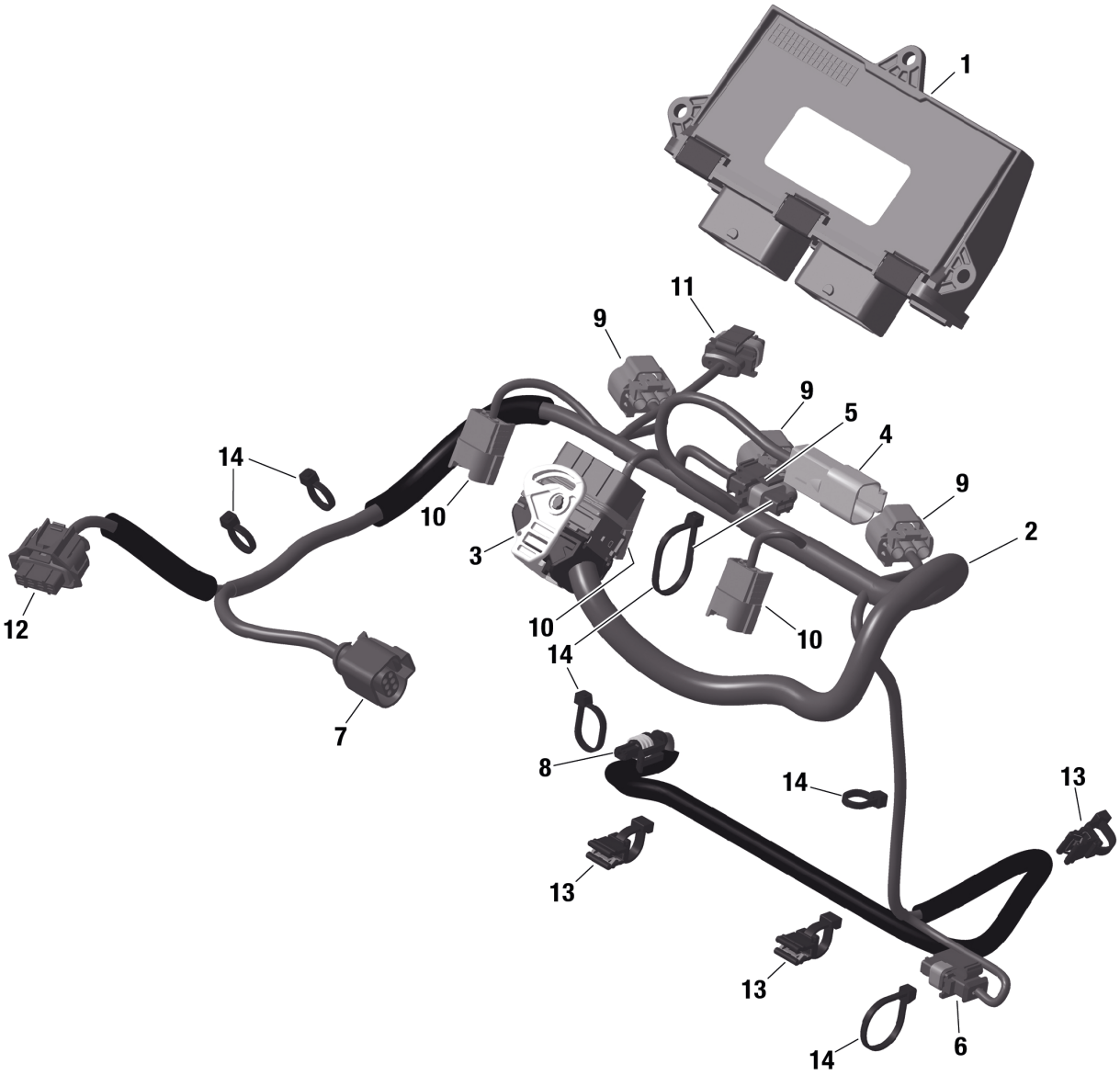

9 WIRING HARNESS

#	NEW	PART#	DESCRIPTION	QTY	CHANGE
1	N	864444	KABELBAUM KPL. 390849293; 390849294; 390849296	1	
1	N	864448	KABELBAUM KPL. engine versions 390849250; 390849295	1	
1	N	894310	MODUL KABELBAUM 849 engine versions 390849230; 390849240; 390849293; 390849294; 390849296	1	
1	N	894311	MODUL KABELBAUM 849 Shot engine versions 390849250; 390849295	1	
2	N	260155	KABELBAUMHALTER	1	
3	N	651397	KABELBINDER 250X4,8 MM	1	
4		651815	KABELBINDER 198x3,5 MM T30L WB3P	6	
5	N	640324	TAPTITE-SCHR. M6X16 TORX T30	6	
6	N	260159	KABELBAUMSCHIENE	1	
7		< --- >	CONNECTOR HOUSING ECU CONNECTOR HOUSING ECU	1	
8		< --- >	CONNECTOR CPS DEUTSCH DT04-2P	1	
9		< --- >	KNOCK SENSOR KNOCK SENSOR	1	
10		< --- >	CONNECTOR CGND CONNECTOR CGND	1	
11		< --- >	CONNECTOR TPS YAZAKI 7283-8730-30	1	
12		< --- >	CONNECTOR MPFI 1-2 SUMITOMO 6195-0043	1	
13		< --- >	CONNECTOR ECTS DEUTSCH DT04-2P	1	
14		< --- >	CONNECTOR ETC_INJ 1-2 AMP 282080-1	1	
15		< --- >	CONNECTOR COIL MOLEX 33472-0601	1	
16		< --- >	CONNECTOR RPS HIRSCHMANN 872-858-541	1	
17		< --- >	CONNECTOR E_RAVE HIRSCHMANN 872-860-541	1	
18		< --- >	CONNECTOR OL_SW MOLEX 33471-0206	1	
19		< --- >	CONNECTOR OILP DELPHI 15449028	1	
20		< --- >	CONNECTOR OPP_SW2 MOLEX 190020002	1	

9 WIRING HARNESS

#	NEW	PART#	DESCRIPTION	QTY	CHANGE
21		< --- >	CONNECTOR OPP_SW AMP 61397-1	1	
22		< --- >	CONNECTOR CAPS TYCO 282088-1 engine versions 390849250; 390849295	1	
23	N	951785	KABELBINDER MIT HALTER 148X3,6	1	
24	N	651815	KABELBINDER 198x3,5 MM T30L WB3P	7	
25	N	651815	KABELBINDER 198x3,5 MM T30L WB3P engine versions 390849250; 390849295	2	

9 WIRING HARNESS