Installation and Operation Instructions

DRL3000 Direct-Vent Gas Fireplace

P/N 900079-02 REV. H 12/2018

Ce manuel est disponible en francais, simplement en faire la demande. Numéro de la pièce 900079-03.

P900079-02

Report No. F14-108

Models

DRL3042TEN	DRL3054TEN
DRL3042TEP	DRL3054TEP

INSTALLER: Leave this manual with the appliance. CONSUMER: Retain this manual for future reference.	**Installateur : Laissez cette notice avec l'appareil. Consommateur : Conservez cette notice pour consultation ultérieure.**

This appliance may be installed in an aftermarket permanently located, manufactured home (USA only) or mobile home, where not prohibited by local codes. This appliance is only for use with the type of gas indicated on the rating plate. This appliance is not convertible for use with other gases, unless a certified kit is used.

Cet appareil peut installé dans une maison préfabriquée (mobile) déjà installée à demeure, si les réglements locaux le permettent. Ce appareil doit être utilisé uniquement avec le type de gaz indiqué sure la plaque signalétique. Cet appareil ne peut être converti à d'autres gaz, sauf si une trousse de conversion est utilsée.

⚠ WARNING:

FIRE OR EXPLOSION HAZARD
Failure to follow safety warnings exactly could result in serious injury, death, or property damage.

- Do not store or use gasoline or other flammable vapors and liquids in the vicinity of this or any other appliance.
- WHAT TO DO IF YOU SMELL GAS
  - Do not try to light any appliance.
  - Do not touch any electrical switch; do not use any phone in your building.
  - Leave the building immediately.
  - Immediately call your gas supplier from a neighbor's phone. Follow the gas supplier's instructions.
  - If you cannot reach your gas supplier, call the fire department.
- Installation and service must be performed by a qualified installer, service agency or the gas supplier.

⚠ AVERTISSEMENT:

RISQUED'INDENDIE OU D'EXPLOSION
Le non-respect Des avertissements de sécurité pourrait d'entraîner des blessures graves, la mort ou des dommages matériels.

- Ne pas entreposer ni utilizer d'essence ni d'autres vapeurs ou liquides inflammables dans le voisinage de cet appareil ou de tout autre appareil.
- QUE FAIRE SI VOUS SENTEZ UNE ODEUR DE GAZ:
  - Ne pas tenter d'allumer d'appareil.
  - Ne touchez à aucan interrupteur. Ne pas vous servir des téléphones se trouvant dans le bâtiment où vous trouvez.
  - Sortez immédiatement de bâtiment.
  - Appelez immédiatement votre fournisseur de gaz depuis un voisin. Suivez les instructions du fournisseur.
  - Si vous ne pouvez rejoindre le fournisseur de gaz, appelez le service des incindies.
- L'installation et l'entretien doivent être assurés par un installateur ou un service d'entretien qualifié ou par le fournisseur de gaz.

SAFETY AND YOUR FIREPLACE

See attached color flyer for proper color representation

DANGER

HOT GLASS WILL CAUSE BURNS.

DO NOT TOUCH GLASS UNTIL COOLED.

NEVER ALLOW CHILDREN TO TOUCH GLASS.

A barrier designed to reduce the risk of burns from the hot viewing glass is provided with this appliance and shall be installed for the protection of children and other at-risk individuals.

Voir ci-joint tract pour une bonne représentation de la couleur

DANGER

VITRE CHAUDE RISQUE DE BRÛLURES.

NE TOUCHEZ PAS UNE VITRE NON REFROIDIE.

NE LAISSEZ JAMAIS UN ENFANT DE TOUCHER LA VITRE.

L'écran pare-étincelles fourni avec ce foyer réduit le risque de brûlure en cas de contact accidentel avec la vitre chaude et doit être installé pour la protection Des enfants et Des personnes à risques.

Vea el volante adjunto para la representación de color adecuado

PELIGRO

EL VIDRIO CALIENTE CAUSARÁ QUEMADURAS.

USTED **NUNCA DEBE** TOCAR EL VIDRIO CALIENTE.

LOS NIÑOS **NUNCA DEBE TOCAR** EL VIDRIO.

Una barrera diseñada para reducir el riesgo de quemaduras desde la mirilla (vidrio) caliente es proveida con este aparato y deberá instalarse para la protección de los niños y otros individuos en riesgo.

Safety and Your Fireplace

All parts of your IHP fireplace get EXTREMELY HOT!

☐ To prevent severe burns and injuries, do Not remove the barrier on the appliance which prevents direct contact with the glass.

☐ Follow the safety instructions below and be sure everyone in your household understands this burn hazard:

- **The surfaces on your fireplace get EXTREMELY HOT!**
- **The glass on the front of the fireplace reaches EXTREMELY HIGH temperatures and can cause severe burns if touched.**
- **Keep children away from an operating fireplace. Closely supervise children in any room where a fireplace is operating to prevent contact with glass.**
- **Keep clothing, furniture, gasoline, and other flammable liquids away from the fireplace.**
- **Even after the gas is turned off, fireplace surfaces remain extremely hot.**

☐ Be sure to attach the enclosed **Safety-in-Operation Warnings** where you turn on your fireplace, to help remind everyone of the dangers associated with high temperatures (**Page 46**).

☐ Read **Important Safety Information** (**Page 4**).

[ENGLISH]

La sécurité et votre foyer

Toutes les parties de votre foyer IHP deviennent EXTRÊMEMENT CHAUDES !

☐ Afin d'éviter les brûlures graves ou les blessures, ne pas retirer l'écran de protection de la foyer qui empêche tout contact direct avec la vitre.

☐ Suivez les instructions de sécurité ci-dessous et veillez à ce que tous les membres de votre famille soient conscients du danger de brûlure encouru :

- **Les surfaces de votre foyer deviennent EXTRÊMEMENT CHAUDES !**
- **La vitre située à l'avant du foyer atteint des températures EXTRÊMEMENT ÉLEVÉES et peut causer de graves blessures en cas de contact.**
- **Tenez les enfants à l'écart du foyer lorsqu'il fonctionne. Surveillez attentivement les enfants dans les pièces où un foyer est utilisé afin d'éviter qu'ils ne soient en contact avec la vitre.**
- **Tenez tous les vêtements, les meubles, l'essence et tout autre liquide inflammable à l'écart du foyer.**
- **Même après fermeture du gaz, les surfaces du foyer restent extrêmement chaudes.**

☐ Veillez à coller les **Étiquettes de mise en garde relatives à la sécurité d'utilisation** à l'endroit où vous utilisez le foyer, pour rappeler à tous les utilisateurs les dangers liés aux températures élevées (**Page 46**).

☐ Lisez **L'information de sûreté importante** (**Page 4**).

[FRENCH]

Seguridad y su chimenea

¡Todas las partes de la chimenea IHP se ponen MUY CALIENTES!

☐ Para evitar quemaduras y lesiones graves, no quite el protector de malla o guardia de seguridad que evita el contacto directo con el vidrio.

☐ Siga las instrucciones de seguridad a continuación y asegúrese de que todos en su hogar sepan acerca de este peligro de quemadura:

- **¡Las superficies de la chimenea estarán EXTREMADAMANTE CALIENTES!!**
- **El vidrio delante de la chimenea alcanza temperaturas EXTREMADAMENTE ALTAS y puede causar quemaduras graves si se toca.**
- **Mantenga a los niños alejados de la chimenea en funcionamiento. Supervise en forma cercana a los niños en cualquier cuarto donde haya una chimenea funcionando para impedir el contacto con el vidrio.**
- **Mantenga la ropa, mobiliario, gasolina y otros líquidos inflamables alejados de la chimenea.**
- **Aún después de haber apagado el gas, las superficies de la chimenea permanecen extremadamente calientes.**

☐ Asegúrese de colocar las **Etiquetas de advertencia de seguridad de operación** en el lugar donde enciende la chimenea, para que todos recuerden los peligros asociados con las altas temperaturas (**Página 46**).

☐ Lea **Información importante de seguridad** (**Página 4**).

[SPANISH]

IMPORTANT SAFETY INFORMATION

Important Safety Information

1. WARNING: Do not operate appliance with the glass front removed, cracked or broken.
2. Do not use this appliance if any part has been under water. Immediately call a qualified service technician to inspect the appliance and to replace any part of the control system and any gas control which has been under water.
3. Due to high temperatures, the appliance should be located out of traffic and away from furniture and draperies.
4. Children and adults should be alerted to the hazards of high surface temperature and should stay away to avoid burns or clothing ignition.
5. Clothing or other flammable material should not be placed on or near the appliance.
6. Young children should be carefully supervised when they are in the same room as the appliance. Toddlers, young children, and others may be susceptible to accidental contact burns. A physical barrier is recommended if there are at-risk individuals in the house. To restrict access to a fireplace or stove, install an adjustable safety gate to keep toddlers, young children, and other at-risk individuals out of the room and away from hot surfaces.
7. Any safety screen, guard or barrier removed for servicing an appliance must be replaced prior to operating the appliance.
8. Installation and repair should be done by a qualified service person. The appliance should be inspected before use and at least annually by a professional service person. More frequent cleaning may be required due to excessive lint from carpeting, bedding material, et cetera. It is imperative that control compartments, burners, and circulating air passageways of the appliance be kept clean. See maintenance instructions on *Page 60*.

L'information de sûreté importante

1. AVERTISSEMENT. Ne pas utiliser l'appareil si le panneau frontal en verre n'est pas en place, est craqué ou brisé.
2. Ne pas se servir de cet appareil s'il a été plongé dans l'eau, même partiellement. Faire inspecter l'appareil par un technicien qualifié et remplacer toute partie du systéme de contrôle et toute commande qui ont été plongées dans l'eau.
3. En raison des températures élevées, l'appareil devrait être installé dans un endroit où il y a peu de circulation et loin du mobilier et des tentures.
4. Les enfants et les adultes devraient être informés des dangers que posent les températures de surface élevées et se tenir à distance afin d'éviter des brûlures ou que leurs vêtements ne s'enflamment.
5. On ne devrait pas placer de vêtements ni d'autres matières inflammables sur l'appareil ni à proximité.
6. Les jeunes enfants devraient être surveillés étroitement lorsqu'ils se trouvent dans la même pièce que l'appareil. Les tout petits, les jeunes enfants ou les adultes peuvent subir des brûlures s'ils viennent en contact avec la surface chaude. Il est recommandé d'installer une barrière physique si des personnes à risques habitent la maison. Pour empêcher l'accès à un foyer ou à un poêle, installez une barrière de sécurité ; cette mesure empêchera les tout petits, les jeunes enfants et toute autre personne à risque d'avoir accès à la pièce et aux surfaces chaudes.
7. Tout écran ou protecteur retiré pour permettre l'entretien de l'appareil doit être remis en place avant de mettre l'appareil en marche.
8. L'installation et la réparation devrait être confiées à un technicien qualifié. L'appareil devrait faire l'objet d'une inspection par un technicien professionnel avant d'être utilisé et au moins une fois l'an par la suite. Des nettoyages plus fréquents peuvent être nécessaires si les tapis, la literie, et cetera produisent une quantité importante de poussière. Il est essentiel que les compartiments abritant les commandes, les brûleurs et les conduits de circulation d'air de l'appareil soient tenus propres. Voyez les instructions d'entretien à la *Page 60*.

Información importante de seguridad

1. ADVERTENCIA: No opere el artefacto con el frente de vidrio quitado, agrietado o roto.
2. No use este artefacto si alguna de sus partes ha estado bajo agua. Llame de inmediato a un técnico de servicio calificado para que inspeccione el artefacto y reemplace cualquier parte del sistema de control y cualquier control de gas que haya estado bajo agua.
3. Debido a las altas temperaturas, el artefacto debe situarse fuera de las áreas de tráfico y lejos del mobiliario y cortinas.
4. Se debe alertar a los niños y adultos sobre los peligros de las altas temperaturas en la superficie y que se mantengan alejados para evitar quemaduras o ignición de la ropa.
5. No debe colocarse ropa u otros materiales inflamables sobre y cerca del artefacto.
6. Se debe supervisar de cerca a los niños cuando estén en el mismo cuarto que el artefacto. Los niños pequeños, los jóvenes y otras personas pueden ser susceptibles a quemaduras por contacto accidental. Se recomienda instalar una barrera física si hay personas en riesgo en la casa. Para restringir el acceso a una chimenea o estufa, instale una puerta de seguridad ajustable para mantener a los niños pequeños, jóvenes y otras personas en riesgo fuera del cuarto y lejos de las superficies calientes.
7. Cualquier malla o resguardo de seguridad quitado para dar servicio a un artefacto, debe reinstalarse antes de operar el artefacto.
8. Una persona de servicio competente debe realizar la instalación y reparación. Una persona de servicio profesional debe inspeccionar el artefacto antes de usar al menos una vez por año. Se puede requerir limpieza más frecuente debido a la pelusa excesiva del alfombrado, del material de cobijas, etc. Es imprescindible mantener limpios los compartimientos de control, los quemadores y los pasajes de circulación del aire del artefacto. Ver las instrucciones de mantenimiento en la *página 59*.

THANK YOU FOR YOUR PURCHASE. WE APPRECIATE YOUR BUSINESS!

Please carefully read and follow all instructions in this manual. Pay special attention to all warnings and safety information. Following these safety, care, and operation instructions will help ensure many years of dependable and enjoyable service from your fireplace.

Please read and understand these instructions before installing, operating, or servicing this product.

NATIONAL FIREPLACE INSTITUTE NFI CERTIFIED www.nficertified.org

We recommend that our gas hearth products be installed and serviced by professionals who are certified in the U.S. by the National Fireplace Institute® (NFI) as NFI Gas Specialists.

General Information
Safety And Your Fireplace 2
Important Safety Information 5
Fireplace Installation, Operation, and Maintenance Notices 6
Packaging 8
Introduction 8
Requirements for the Commonwealth of Massachusetts 11
Cold Climate Insulation 11
Manufactured Home Requirements 12
Location 12
Vent Termination Clearances 13
Minimum Clearances to Combustibles 15
Wall Finishes / Surrounds / Mantels 16
Installation Preparation 16

Installation
Installation Sequence 17
Construct the Fireplace Framing 17
Prepare the Fireplace Top Spacers 19
Route the Gas Supply Line into the Fireplace 19
Vent System Preparation 20
Install the Vent System 24
Complete the Field Wiring 35
Connect the Gas Line 37
Verify Proper Fireplace Operation 38
If necessary, Install the Firebox Floors 38
If necessary, Install the Firebox Liners 38
Install the Glass Media 39
Install the Baffle 39
Install the Glass Door 39
Adjust the Air Shutter to Ensure Proper Flame Appearance 39
Install the Finishing Materials 41
Install the Wall Switch Receiver 45
Initialize the Remote Control System 45
Attach the Safety-in-Operation Warnings 45
Installation Accessories 47
Gas Conversion Kits 49

Operation
Operation 52
Maintenance 60
Optional Accessory Components 63
Lighting Instructions 65
Troubleshooting 67
Replacement Parts 68
Warranty 71

APPLIANCE INSTALLATION, SERVICE, AND MAINTENANCE NOTICES

⚠ WARNING

Improper installation, adjustment, alteration, service or maintenance can cause injury or property damage. Refer to this manual. For assistance or additional information consult a qualified installer, service agency or the gas supplier.

⚠ AVERTISSEMENT

Une installation, un réglage,une modification, une réparation ou un entretien mal effectué peut causer des dommages matériels ou des blessures. Voir la notice de l'utilisateur qui accompagne l'appareil. Pour de l'aide ou des renseignements supplémentaires, consultez un installateur, un technicien agréé ou le fournisseur de gaz.

Only trim kit(s) supplied by the manufacturer shall be used in the installation of this fireplace.
Seules des portes certifiées pour cet appareil doivent être utilisées.

These appliances must not be connected to a chimney or flue serving a separate solid fuel burning appliance.

Any change to this appliance and/or its operating controls is dangerous. Improper installation or use of this appliance can cause serious injury or death from fire, burns, explosion or carbon monoxide poisoning.

CARBON MONOXIDE POISONING: Early signs of carbon monoxide poisoning are similar to the flu with headaches, dizziness and/or nausea. If you have these signs, obtain fresh air immediately. Turn off the gas supply to the appliance and have it serviced by a qualified professional, as it may not be operating correctly. Some people are more affected by carbon monoxide than others, including pregnant women, people with heart or lung disease or anemia, those under the influence of alcohol, and those at high altitudes.

Turn off gas and electrical power to the appliance and allow it to cool before cleaning or servicing the appliance.

If the barrier becomes damaged, the barrier shall be replaced with the manufacturer's barrier for this appliance.
Si l'écran est endommagé, il doit être remplacé par celui fournit par le fabricant de cet appareil.

For use with barrier(s) Part No(s). J7427 (42" Models) and J7426 (54" Models).

Reinstall any barrier removed before operating the appliance. The barrier is designed to reduce the risk of burns from hot glass. Do not operate the appliance without the barrier installed.

APPLIANCE OPERATION NOTICES

These fireplaces are vented gas appliances. Do not burn wood or other material in these appliances.

These appliances are designed to operate on natural gas or propane gas only. The use of other fuels or combinations of fuels will degrade the performance of this system and may be dangerous.

Provide adequate clearances around air openings and adequate accessibility clearance for service and proper operation. Never obstruct the front openings of the appliance.

These appliances are designed as supplemental heaters. Therefore, it is advisable to have an alternate primary heat source when installed in a dwelling.

WARRANTY INFORMATION

Your gas appliance is covered by a limited 20-year warranty. You will find a copy of the warranty accompanying this manual. Please read the warranty to be familiar with its coverage.

Retain this manual. File it with your other documents for future reference.

Failure to comply with the installation and operating instructions provided will result in an improperly installed and operating appliance, voiding its warranty.

Do not attempt to alter or modify the construction of the appliance or its components. Any modification or alteration may void the warranty, certification, and listings of this unit.

IMPORTANT SAFETY AND WARNING INFORMATION

⚠ WARNING

This product can expose you to chemicals including Carbon Black, which is known to the State of California to cause cancer, and Carbon Monoxide, which is known to the State of California to cause birth defects or other reproductive harm. For more information go to www.P65Warnings.ca.gov

⚠ AVERTISSEMENT

Ce produit peut vous exposer à des produits chimiques, y compris du carbone noir qui est reconnu par l'État de Californie comme un produit cancérigène, et du monoxyde de carbone, qui est reconnu par l'État de Californie comme pouvant causer des déformations fœtales ou perturber la fonction reproductive. Pour plus d'information, aller sur www.P65Warnings.ca.gov

⚠ CAUTION

Hot while in operation. Do not touch. Severe Burns may result. Keep children, clothing furniture, gasoline and other liquids having flammable vapors away.

⚠ ATTENTION

L'appareil est chaud lorsqu'il fonctionne. Ne pas toucher l'appareil. Risque de brûlures graves. Surveiller les enfants. Garder les vêtements, les meubles, l'essence ou autres liquides produisant des vapeur inflammables loin de l'appareil.

INSTALLATION

PACKAGING

All models include

The assembled vented gas fireplace heater is packaged with:

- Literature Kit (Installation and Operation Instructions [this manual], Hot Glass Safety Flyer, and Safety-In-Operation Warning Labels)
- Vent restrictor assembly
- Six (6) Non-combustible fiber boards
- Handheld remote control (transmitter) with (3) **AAA** batteries
- Remote control receiver (wall switch) assembly with (4) **AA** batteries
- Glass media kit, black
- Barrier

*Use of the (2) ***side*** non-combustible fiberboards is optional for DRL3000 series models.

Optional accessories

- Surround kit
- Blower Kit
- Gas conversion kit

INTRODUCTION

These vented gas fireplace heaters are direct-vent (top vent only), sealed combustion, air-circulating gas fireplaces designed for residential applications. Direct-vent appliances operate with the combustion chamber isolated from the indoor environment. All air for combustion is brought in from the outside, and exhaust gases are vented through the same direct-vent, coaxial (intake/exhaust) vent system.

These appliances are designed to operate on natural or propane gas only. The use of other fuels or fuel combinations will degrade the performance of this system, may be dangerous, and may void the warranty.

Electronic fireplaces are designed with an electronic intermittent pilot ignition system. Electrical power (110 Vac line voltage) is recommended to operate the fireplace; however, **AA** batteries (not provided) can be used for full-time operation or as a backup in case of a power outage.

Batteries will operate the flame ON/OFF function only. Electrical power is required to operate the optional blower.

A remote control system is included with all models and provides remote ON/OFF flame control (manual adjustment of the gas valve settings is not possible).

NOTE: Installation and repair should be done by a qualified service person. The fireplace should be inspected before use and at least annually by a professional service person. More frequent cleaning may be required due to excessive lint from carpeting, bedding material, etcetera. It is imperative that control compartments, burners and circulating air passageways of the fireplace be kept clean.

Remarqué : L'installation et la réparation devrait être confiées à un technicien qualifié. L'appareil devrait faire l'objet d'une inspection par un technicien professionnel avant d'être utilisé et au moins une fois l'an par la suite. Des nettoyages plus fréquents peuvent être nécessaires si les tapis, la literie, et cetera produisent une quantité importante de pous-sière. Il est essentiel que les compartiments abritant les commandes, les brûleurs et les conduits de circulation d'air de l'appareil soient tenus propres.

NOTE: Diagrams and illustrations are not necessarily shown to scale.

Approved Vent Components

These fireplaces are designed, tested and listed for operation and installation with the following vent components only:

- Secure Vent® Direct-Vent System Components,
- Secure Flex® Flexible Vent Components, and
- Z-FLEX® Model GA Venting Systems listed to UL1777 and ULCS635 manufactured by Flexmaster Canada Limited.

Use only the correct size venting (4-1/2” inner and 7-1/2” outer).

These approved vent system components are labeled for identification. DO NOT use any other manufacturer’s vent components with these fireplaces.

Codes and Standards

These fireplaces comply with National Safety Standards and are tested and listed by PFS (Report No. F14-108) to ANSI Z21.88 (in Canada, CSA-2.33), and CAN/CGA-2.17-M91 (CSA P4.1) in both USA and Canada, as vented gas fireplace heaters.

These appliances comply with CSA P.4.1-2015 “Testing Method for Measuring Annual Fireplace Efficiency. P4 (EnerGuide) is a measurement of the Canadian Office of Energy Efficiency.

These fireplaces are listed for installation in bedrooms, aftermarket mobile homes, and manufactured homes.

The installation must conform to local codes or, in the absence of local codes, with the National Fuel Gas Code, ANSI Z223.1/NFPA 54—latest edition, or the Natural Gas and Propane Installation Code, CAN/CGA B149.1.

The fireplace, when installed, must be electrically grounded and wired in accordance with local codes or, in the absence of local codes, with the National Electrical Code, ANSI/NFPA 70—latest edition, or the Canadian Electrical Code, CSA C22.1—latest edition.

BTU Input

Table 1 - Input Rate, Gas Valves

Models	Input Rate (BTU/HR)	
	Natural Gas	Propane (field converted)
42”	22,000	20,000
54”	30,000	30,000

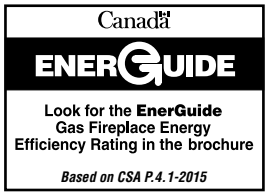

Table 2 - Thermal Efficiency (%)

Model	Natural Gas		Propane	
	AFUE *	P4 **	AFUE *	P4 **
42”	66.7	54.2	69.6	59.4
54”	71.9	63.2	72.1	65.5

*** AFUE is a measurement of the US Department of Energy**
**** P4 (EnerGuide) is a measurement of the Canadian Office of Energy Efficiency.**

Gas Pressure

Table 3 - Inlet Gas Supply Pressure

Fuel	Minimum	Maximum
Natural Gas	5” WC / (1.25 kPa)	10.5” WC / (2.61 kPa)
Propane	11.0” WC / (2.74 kPa)	13.0” WC / (3.23 kPa)

Table 4 - Manifold Gas Supply Pressure

Natural Gas	3.5” WC / (0.87 kPa)
Propane	10.0” WC / (2.49 kPa)

The control valves have a 3/8” (10 mm) NPT thread inlet and outlet side of the valve *(**Figure 1**).*

Figure 1 - Electronic Gas Valve

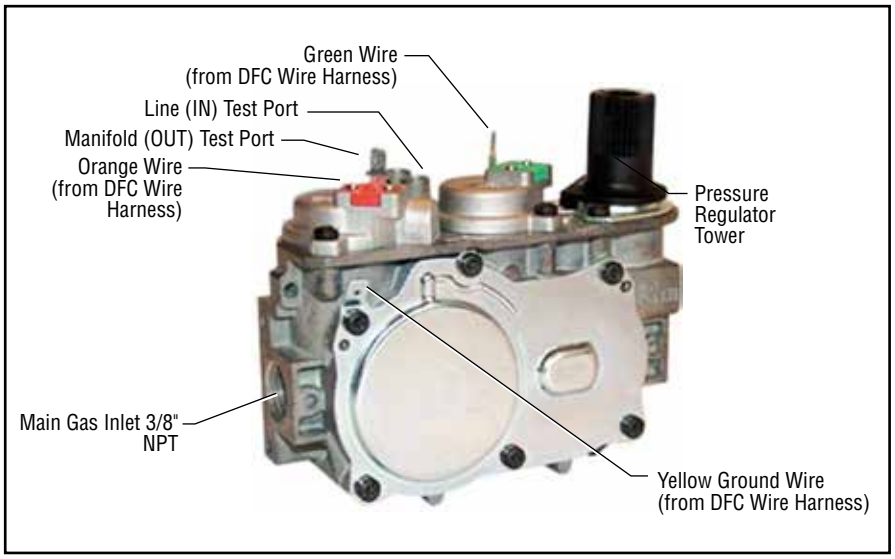

The SIT gas valve in this fireplace has a 3/8” NPT thread main gas inlet and outlet. Test gauge connections are provided on the front of the electronic gas control valve (identified IN for the inlet and OUT for the manifold side).

Figure 2 - Accessing the gas valve

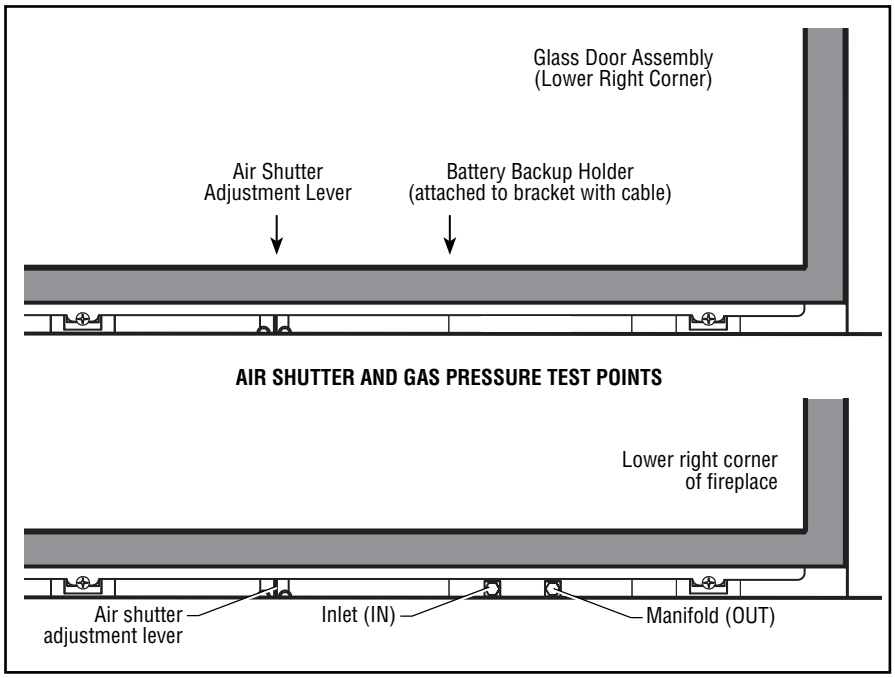

Propane tanks are at pressures that will cause damage to valve components. Verify that the tanks have step down regulators to reduce the pressure to safe levels.

Using a propane tank smaller than 100 lbs may create pressure loss and insufficient fuel delivery, which can cause sooting, severe delayed ignition, or other malfunctions (see NPFA 58).

Any damage as a result of insufficient tank size or other improper installation is NOT covered under the limited warranty.

The appliance and its appliance main gas valve must be disconnected from the gas supply piping system during any pressure testing of that system at test pressures **in excess of** 1/2 psi (3.5 kPa).

The appliance must be isolated from the gas supply piping system by closing its equipment shutoff valve during any pressure testing of the gas supply piping system at test pressures **equal to or less than** 1/2 psi (3.5 kPa).

Orifice Sizes—Sea Level to High Altitude

These fireplaces are tested and approved for installation at elevations of 0–4500 ft (0–1372 m) above sea level using the standard burner orifice sizes *(**Table 5**)*. For elevations above 4500 ft, contact your gas supplier or qualified service technician.

Table 5 - Burner Orifice Sizes, Elevation 0–4500 ft (0–1372 m)

Model	Natural Gas drill size	Propane drill size
42”	#43 (0.089”)* Cat. No. 99K75	#55 (0.052”)* Cat. No. 19L52
54”	#37 (0.104”)* Cat. No. 24M10	#52 0.0635”* Cat. No. 37G00

*** Standard size installed at factory**

Deration

At elevations above 4500 ft, the amount of BTU fuel value delivered must be reduced by either:

- Using gas that has been derated by the gas company.
- Changing the burner orifice to a smaller size as regulated by the local authorities having jurisdiction and by the (USA) National Fuel Gas Code NFPA 54/ANSI Z223.1—latest edition or, in Canada, the CAN/CGA-B149.1 codes—latest edition.

NOTE: Flame breadth, height and width will diminish 4% for every 1,000 ft of altitude.

IN CANADA—CAN/CGA-2.17-M91 (HIGH ALTITUDE):

THE CONVERSION SHALL BE CARRIED OUT BY A MANUFACTURER’S AUTHORIZED REPRESENTATIVE, IN ACCORDANCE WITH THE REQUIREMENTS OF THE MANUFACTURER, PROVINCIAL OR TERRITORIAL AUTHORITIES HAVING JURISDICTION AND IN ACCORDANCE WITH THE REQUIREMENTS OF THE CAN/CGA-B149.1 OR CAN/CGA-B149.2 INSTALLATION CODES.

REQUIREMENTS FOR THE COMMONWEALTH OF MASSACHUSETTS

These appliances are approved for installation in the U.S. state of Massachusetts if the following additional requirements are met:

- Install this appliance in accordance with Massachusetts Rules and Regulations 248 C.M.R. Sections 4.00 through 8.00.
- Installation and repair must be done by a plumber or gas fitter licensed in the Commonwealth of Massachusetts.
- The flexible gas line connector used shall not exceed 36” (914 mm) in length.
- The individual manual shutoff must be a T-handle type valve.

Massachusetts Horizontal Vent Requirements

In the Commonwealth of Massachusetts, horizontal terminations installed less than seven (7) ft above the finished grade must comply with the following additional requirements:

- A hard wired carbon monoxide detector with an alarm and battery back-up must be installed on the floor level where the gas fireplace is installed. The carbon monoxide detector must comply with NFPA 720, be ANSI/UL 2034 listed and be ISA certified.
- A metal or plastic identification plate must be permanently mounted to the exterior of the building at a minimum height of eight (8) ft above grade and be directly in line with the horizontal termination. The sign must read, in print size no less than one-half (1/2) inch in size, GAS VENT DIRECTLY BELOW. KEEP CLEAR OF ALL OBSTRUCTIONS.

COLD CLIMATE INSULATION

For cold climate installations, seal all cracks around your fireplace with noncombustible material and wherever cold air could enter the room. It is especially important to insulate outside chase cavity between studs and under floor on which fireplace rests, if floor is above ground level. Gas line holes and other openings should be caulked or stuffed with unfaced fiberglass insulation. Caulk the firestop only where the pipe penetrates an outside wall, attic, or other unconditioned space.

NOTE: Do not use loose, or blown-in insulation in the cavity surrounding the fireplace.

If the fireplace is being installed on a cement slab in cold climates, a sheet of plywood or other raised platform can be placed underneath to prevent conduction of cold transferring to the fireplace and into the room. It also helps to sheetrock inside surfaces and tape for maximum air tightness and caulk firestops.

MANUFACTURED HOME REQUIREMENTS

This appliance may be installed in an aftermarket, permanently located, manufactured home (USA only) or mobile home, where not prohibited by local codes.

Cet appareil peut être installé dans une maison préfabriquée (mobile) déjà installée à demeure si les règlements locaux le permettent.

This appliance is only for use with the type of gas indicated on the rating plate. This appliance is not convertible for use with other gases, unless a certified kit is used.

Cet appareil doit être utilisé uniquement avec le type de gaz indiqué sur la plaque signalétique. Cet appareil ne peut être converti à d'autres gaz, sauf si une trousse de conversion est utilisée.

⚠ CAUTION

Ensure that the cross members are not cut or weakened during installation. The structural integrity of the manufactured home floor, wall, and ceiling / roof must be maintained.

⚠ CAUTION

This appliance must be grounded to the chassis of the manufactured home in accordance with local codes or in the absence of local codes, with the National Electrical Code ANSI / NFPA 70—latest edition or the Canadian Electrical Code CSA C22.1—latest edition.

LOCATION

In selecting the location, the aesthetic and functional use of the fireplace are primary concerns. However, vent system routing to the exterior and access to the fuel supply are also important. The fireplace may be located on or near conventional construction materials. See **Construct the Fireplace Framing on *Page 17*** for more information.

Due to high temperatures, the fireplace should be located out of traffic and away from furniture and draperies.

En raison des températures élevées, l'appareil devrait être installé dans un endroit où il y a peu de circulation et loin du mobilier et des tentures.

The location should also be free of electrical, plumbing or other heating/air conditioning ducting.

Be aware that this is a heat producing fireplace. Objects placed above the unit are exposed to elevated temperatures. Do not insulate the space between the fireplace and the area above it.

Figure 3 - Typical Locations and Venting

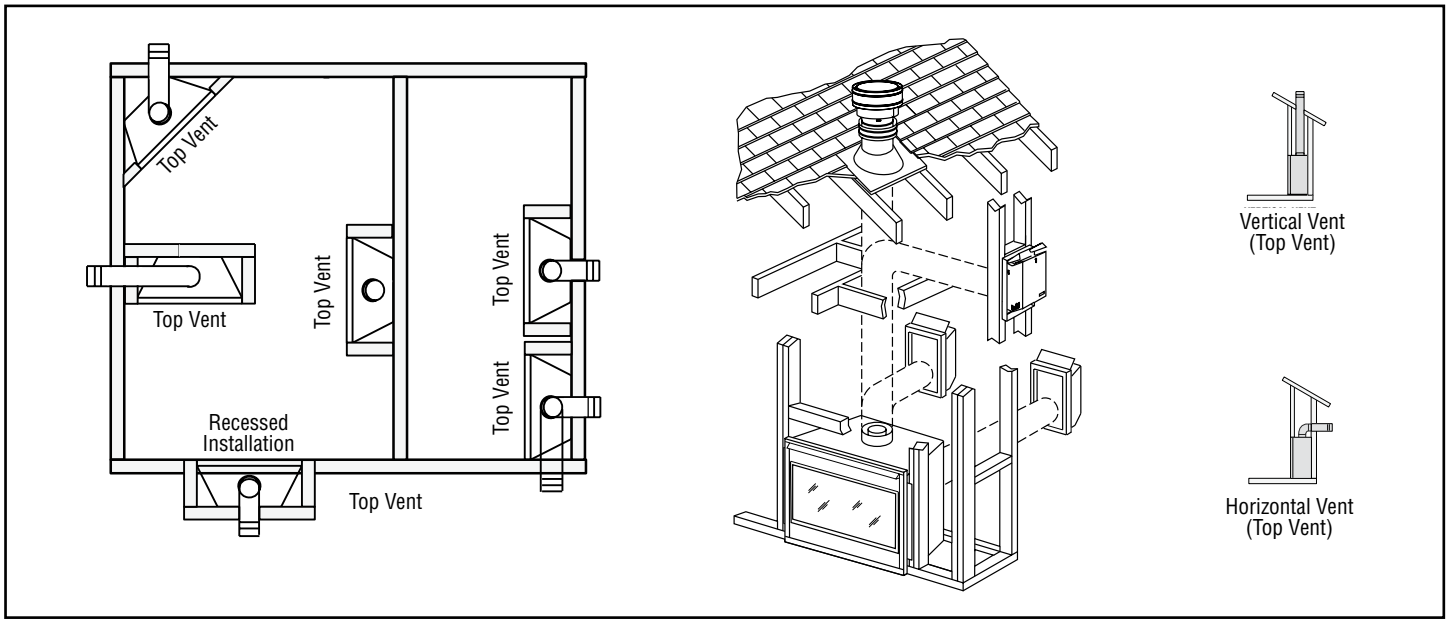

VENT TERMINATION CLEARANCES

The following vent termination figures and charts should be used. Install venting according to local codes, these instructions, the current National Fuel Gas Code (ANSI Z223.1/NFPA 54) in the USA or the current standards of CAN/CGA-B149.1 in Canada.

Vertical Vent Termination Clearances

Terminate multiple vent terminations according to the installation codes listed above and ***Figure 4***.

Figure 4 - Multiple Terminations

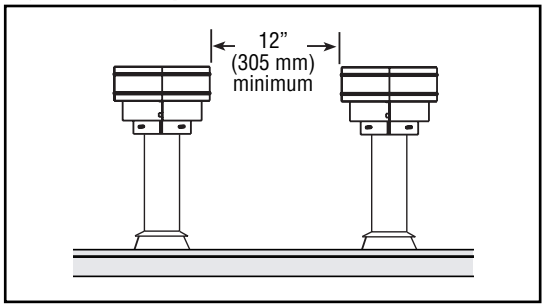

Terminate single vent caps relative to building components according to ***Table 6*** and ***Figure 4***.

Table 6 - Termination Heights for Vents above Flat or Sloped Roofs (NFPA 54 / ANSI Z223.1)—Gas Vent Rule

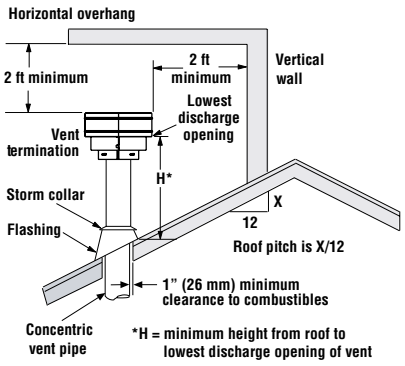

Roof Pitch	Termination Height *
Flat to 6/12	1.0 ft (0.3 m)
6/12 to 7/12	1.25 ft (0.38 m)
7/12 to 8/12	1.5 ft (0.46 m)
8/12 to 9/12	2.0 ft (0.61 m)
9/12 to 10/12	2.5 ft (0.76 m)
10/12 to 11/12	3.25 ft (0.99 m)
11/12 to 12/12	4.0 ft (1.22 m)
12/12 to 14/12	5.0 ft (1.52 m)
14/12 to 16/12	6.0 ft (1.83 m)
16/12 to 18/12	7.0 ft (2.13 m)
18/12 to 20/12	7.5 ft (2.29 m)
20/12 to 21/12	8.0 ft (2.44 m)

Horizontal Vent Termination Clearances

The horizontal vent termination must have a minimum of 6” (152 mm) clearance to any overhead combustible projection of 2-1/2” (64 mm) or less *(**Figure 5**)*. For projections exceeding 2-1/2” (64 mm) *(**Figure 5**)*. For additional vent location restrictions refer to ***Table 7***.

All horizontal terminations may be located as close as 6” (152mm) to any (non-combustible and combustible) exterior sidewall. This distance may be decreased to 2” (51mm) for noncombustible exterior sidewalls with SV4.5HT-2 termination *(**Table 7**)*.

Figure 5 - Horizontal Vent Termination Clearances

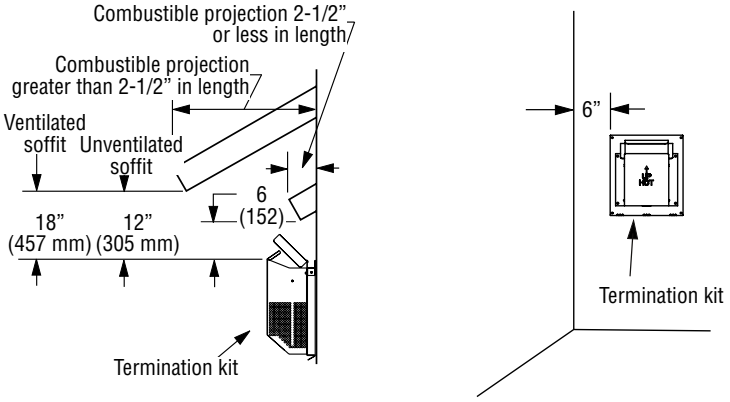

NOTE: See ***Figure 25*** on **Page 31** for exterior wall recess allowances for the SV4.5HT-2 termination.

Table 7 - Horizontal vent termination clearances for buildings with combustible and noncumbustible exteriors

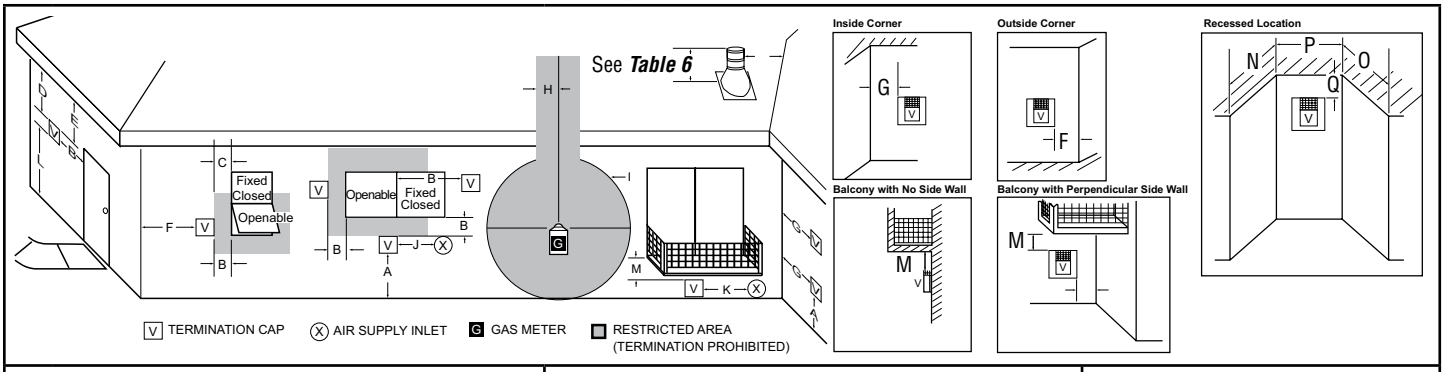

		U.S. Installation **	Canadian Installation *
A	Clearance above grade, veranda, porch, desk, or balcony	12” (300 mm) **	12” (300 mm) *
B	Clearance to window or door that may be opened	6” (150 mm) for fireplaces < 10,000 Btu/h (3 kW), 9” (230 mm) for fireplaces > 10,000 Btu/h (3 kW), and < 50,000 Btu/h (15 kW), 12” (300 mm) for fireplaces > 50,000 Btu/h (15 kW) **	6” (150 mm) for fireplaces < 10,000 Btu/h (3 kW), 12” (300 mm) for fireplaces > 10,000 Btu/h (3 kW)
C	Clearance to permanently closed window	9” (229 mm) recommended to prevent window condensation	12” (305 mm) recommended to prevent window condensation
D	Vertical clearance to ventilated soffit located above the termination within a horizontal distance of 18” (458 mm)	18” (458 mm)	18” (458 mm)
E	Clearance to unventilated soffit	12” (305 mm) 30” (760 mm) to vinyl soffit	12” (305 mm) 30” (760 mm) to vinyl soffit
F	Clearance to outside corner	5” (127 mm) minimum	5” (127 mm) minimum
G	Clearance to inside corner	2” (51 mm) minimum	2” (51 mm) minimum
H	Clearance to each inside of center line extended above meter / regulator assembly	36” (910 mm) within a height of 15 ft above the meter / regulator assembly **	36” (910 mm) within a height of 15 ft above the meter / regulator assembly *
I	Clearance to service regulator vent outlet	36” (910 mm)**	36” (910 mm)*
J	Clearance to nonmechanical air supply inlet to building or the combustion air inlet to any other fireplace	6” (150 mm) for fireplaces < 10,000 Btu/h (3 kW), 9” (230 mm) for fireplaces > 10,000 Btu/h (3 kW) and < 50,000 Btu/h (15 kW), 12” (300 mm) for fireplaces > 50,000 Btu/h (15 kW)**	6” (150 mm) for fireplaces < 10,000 Btu/h (3 kW), 12” (300 mm) for fireplaces > 10,000 Btu/h (3 kW)
K	Clearance to a mechanical air supply inlet	36” (910 mm) above if within 10 ft (3 m) horizontally **	72” (1830 mm) *
L	Clearance above paved sidewalk or paved driveway located on public property	84” (2130 mm) ‡	84” (2130 mm) ‡
M	Clearance under veranda, porch, deck or balcony	12” (300 mm) *‡	12” (300 mm) *‡
N	Depth of alcove (maximum)	72” (1830 mm) **	72” (1830 mm) *
O	Clearance to termination (alcove)	6” (15.2 mm) **	6” (15.2 mm)*
P	Width of alcove (minimum)	36” (910 mm) **	36” (910 mm) *
Q	Clearance to combustible above (alcove)	18” (457 mm) **	18” (457 mm) *

* In accordance with the current CAN/CGA-B149.1 National Gas And Propane Installation Code

** In accordance with the current ANSI Z223.1/NFPA 54 National Fuel Gas Codes

‡ A vent shall not terminate directly above a sidewalk or paved driveway which is located between two single family dwellings and serves both dwellings

*‡ Only permitted if veranda, porch, deck, or balcony is fully-open on a minimum two sides beneath the floor

MINIMUM CLEARANCES TO COMBUSTIBLES

Fireplace And Vent Clearances

The fireplace is approved with zero clearance to combustible materials on all sides *(**Table 8**)*, with the following exceptions:

- When unit is recessed, the side walls surrounding the unit must not extend beyond unit front edge *(**Figure 6**)*.
- When the unit is installed with one side flush with a wall, the wall on the other side of the unit must not extend beyond the front edge of the unit *(**Figure 6**)*.

Table 8 - Minimum Clearances *

Back	1/2” (13 mm) to wrapper 0” (0 mm) to Spacers
Sides	1/2” (13 mm) to wrapper 0” (0 mm) to Spacers **
Top Spacers	0” (0 mm)
Floor	0” (0 mm)
From Bottom of Unit to Ceiling	65” (1651 mm)
Vent	3” (77 mm)—Top * 1” (26 mm)—Sides and Bottom
Front Service Clearance— clearance immediately in front of viewing area(s)	36” (914 mm)

*** 3” (77 mm) above any horizontal/inclined vent component.**

**** See *Page 20* for clearance requirements to the nailing flange located at each side of the unit and any screw heads adjacent to it.**

Hearth Extension

A hearth extension is not required with this fireplace. Any hearth extension used is for appearance only and does not have to conform to standard hearth extension installation requirements.

Shelf Height

The venting attached to the top vent should be routed in a way to minimize obstructions to the space above the fireplace. Do not insulate the space between the fireplace and the area above it *(**Table 9**)*. The minimum height from the base of the fireplace to the underside of combustible materials used to construct a utility shelf in this fashion is shown in ***Table 9***.

NOTE: This is a heat-producing appliance. Objects placed above the unit are exposed to elevated temperatures.

Table 9 - Combustible Shelf Height—Top Vent

Model	Top Vent with one 90° Elbow *	
	Secure Vent® (using rigid elbow)	**Secure Flex® (using flex elbow)**
42” *	51-1/4” (1299 mm)**	53” (1345 mm)**
54” *	55” (1400 mm)**	56-3/4” (1441 mm)**

*** 6” straight vent section required before 90° elbow**

**** Includes 3” clearance to combustibles required above vent components**

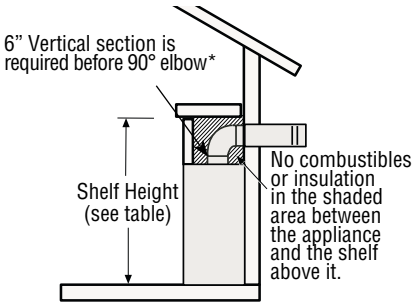

Wall Finishes / Surrounds / Mantels

Clearances to combustible mantels vary according to mantel depth *(**Figure 7**)*.

Mantels constructed of non-combustible material may be installed at any height above the appliance opening; however, do NOT allow anything to hang below the top edge of the fireplace door.

Minimum clearance requirements include any projections such as shelves, window sills, mantels, etc. above the fireplace.

NOTE: To avoid heat-related finish damage, we recommend the use of high temperature paint (rated 175° F or higher) on the underside of the mantel.

NOTE: The factory-supplied non-combustible fiberboard MUST be installed above the fireplace opening.

Figure 6 - Combustible Side Clearances

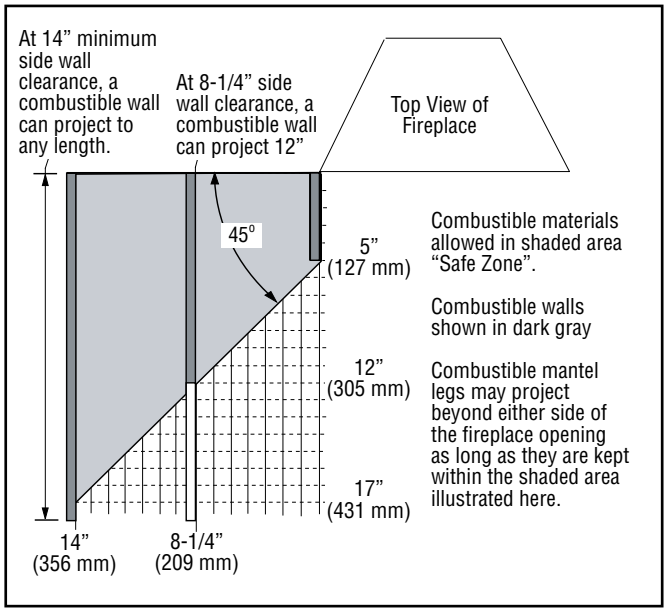

Figure 7 - Mantel Height

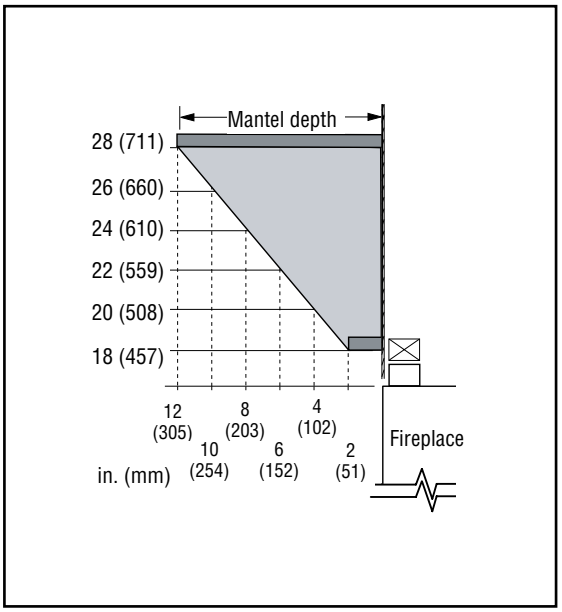

INSTALLATION PREPARATION

The fireplace is shipped with all gas controls and components installed and pre-wired. Before installing the fireplace, follow these steps:

1. Remove and retain the shipping carton.
2. Confirm receipt of required items listed in **Packaging on *Page 8***.
3. Retrieve the non-combustible fiberboard from behind the fireplace, and set aside in a safe location for later installation.
4. If not already done, remove the glass door *(**Page 58**)*, and set aside in a secure location for later reinstallation.

   NOTE: Place the glass door on the shipping carton to protect its surface.
5. Remove the modesty panel. Set aside in a secure location for later installation.

INSTALLATION SEQUENCE

The typical sequence of installation is outlined below; however, each installation is unique and may result in variations to the steps described.

See the pages referenced in the following steps for detailed instructions.

Check local codes for more restrictive installation. The more restrictive installation for clearances must be used.

Framing

1. **Construct the Fireplace Framing** *(Page 17)*.
2. **Prepare the Fireplace Top Spacers** *(Page 19)*.
3. **Route the Gas Supply Line into the Fireplace** *(Page 19)*.
4. **Rough in the Electrical Supply, if Needed** *(Page 20)*.
5. **Prepare the Fireplace Nailing Flanges** *(Page 20)*.
6. **Place the Fireplace in the Framing and Secure** *(Page 20)*.

Venting

7. **Select a Horizontal or Vertical Vent System** *(Page 20)*.
8. **Install the Vent Restrictor (if necessary)** *(Page 20)*.
9. **Install the Vent System** *(Page 24)*.

Electrical Connection

10. **Complete the Field Wiring** *(Page 35)*.

Gas Connection

11. **Connect the Gas Line** *(Page 37)*.
12. **Install the Wall Switch Receiver** *(Page 45)*.
13. **Initialize the Remote Control System** *(Page 45)*.
14. **Verify Proper Fireplace Operation** *(Page 38)*.

Finishing

15. **Install the Glass Media** *(Page 57)*.
16. **Install the Baffle** *(Page 39)*.
17. **Install the Glass Door and Barrier** *(Page 58)*.
18. **Adjust the Air Shutter to Ensure Proper Flame Appearance** *(Page 39)*.
19. **Install the Finishing Materials** *(Page 41)*.
20. **Attach the Safety-in-Operation Warning Labels** *(Page 45)*.

1. Construct the Fireplace Framing

1. Frame the fireplace as illustrated in ***Table 10*** *or* ***11***. All framing details must allow for a minimum clearance to combustible framing members as shown in ***Table 8***. Steel studs are strongly recommended where exposed to heat.
2. Mount the fireplace on a fully supported base extending the full width and depth of the unit. If installed on combustible materials, such as carpeting, vinyl tile, or combustible material other than wood flooring, the appliance shall be installed on a metal or wood panel extending the full width and depth of the fireplace.

NOTE: Headers may be in direct contact with the fireplace top standoff spacers when they are bent up vertically, maintaining the 4-3/8” clearance to the fireplace top, but must not be supported by them or notched to fit around them. All construction above the fireplace must be self-supporting. DO NOT use the fireplace for structural support.

NOTE: Fireplace is designed for 1" thickness of non-combustible board on the face of the unit. If the finished surface is to match a thinner finish material the unit must be recessed up to 1/2" to allow non-combustible to be flush with surrounding finish material (see * for dimensions).

Table 10 - Fireplace Framing Dimensions - Inches (millimeters)

Model	A	B*	C	D	E**	F
42"	57 (1448)	21 (534)	37 (940)	44-3/8 (1127)	35-5/8 (905)	65 (1651)
54"	69 (1753)	21 (534)	40-7/8 (1039)	48-1/4 (1226)	39-1/2 (1004)	65 (1651)

*with 1/2" recess for flush framing
** Top *Jack Stud Header* positioned horizontally *(see **Pages 41-42**)*

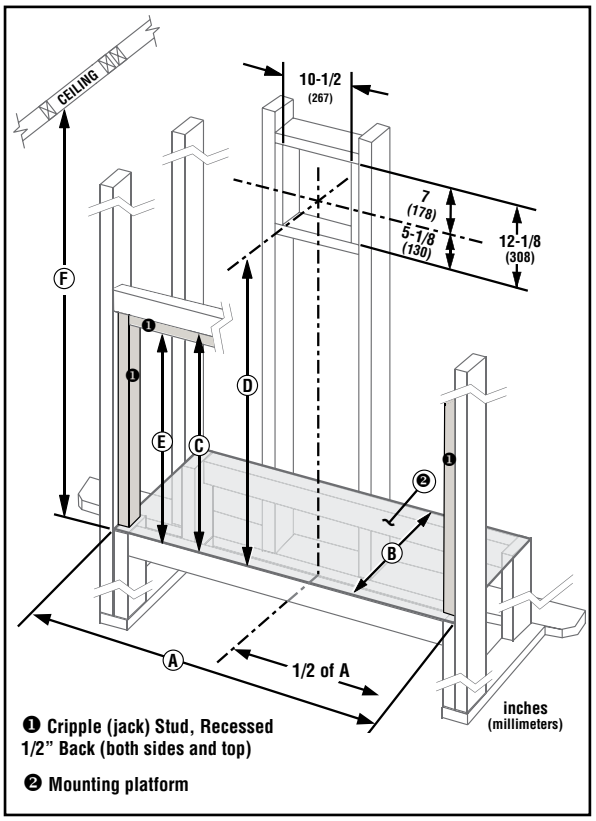

NOTE: Illustration provided for dimensions. Fireplace must be adequately framed and supported with 2 x 4, or larger building materials.

- **a.** Required frame opening width (**1/2 of a** = horizontal centerline of fireplace and vent framing opening)
- **b.** **Required frame opening depth with 1/2" (13mm) thick wall finish material (for other wall finish thicknesses, adjust frame opening depth and nailing flanges accordingly)**
- **c.** Minimum frame opening height (from base of appliance to header)
- **d.** Minimum height from appliance base to vertical centerline of horizontal termination vent pipe (with 6" straight vent section and 90° elbow off appliance vent collar)

NOTE: The vertical centerline of the horizontal termination vent pipe is NOT the same as the vertical centerline of the vent frame opening because of firestop/spacer offset.

- **e.** Minimum frame opening height from base of appliance to jack stud header.
- **f.** Minimum height from appliance base front to ceiling

NOTE: Mount on a fully supported platform extending full width and depth of unit.

Table 11 - Fireplace Framing Specifications—Corner Installation with Horizontal Termination

Model	A	B	C	D	E
42"	54-3/4" (1366 mm)	94-3/4 (2407 mm)	67" (1702 mm)	47-3/8" (1203 mm)	25-1/8" (638 mm)
54"	65-3/4" (1670 mm)	106-3/4" (2711 mm)	75-1/2" (1917 mm)	53-3/8" (1356 mm)	29-3/8" (745mm)

NOTE: Back wall of chase/enclosure (including finishing materials) shown.

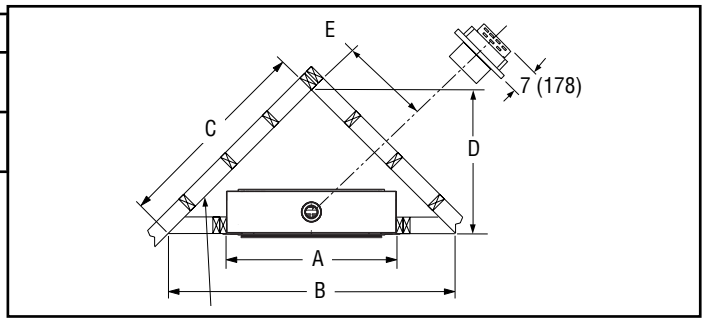

Table 12 - Fireplace Dimensions

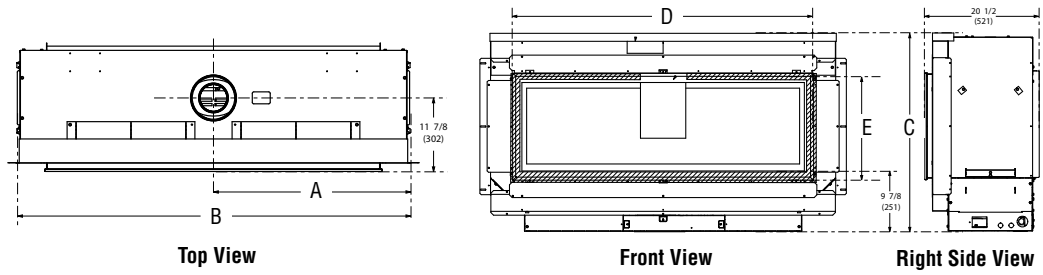

Model	A	B	C	D	E
42"	26-7/8" (683 mm)	53-3/4" (1366 mm)	32-1/2" (826 mm)	44-1/8" (1121 mm)	15-3/4" (400 mm)
54"	32-1/2" (826 mm)	65-3/4" (1670 mm)	36-3/8" (924 mm)	56-1/8" (1426 mm)	19-5/8" (498 mm)

NOTE: Assemble top standoffs before installing fireplace.

Table 13 - Viewable Glass

42" models	40" W x 10-1/2" H 1016 mm x 267 mm
54" models	51" W x 14-3/4" H 1295 mm x 375 mm

Table 14 - Surround Dimensions

42" models	56-1/2" W x 23-3/4" H 1435 mm x 603 mm
54" models	68" W x 27-1/2" H 1727 mm x 699 mm

Table 15 - Vent Collar

All models	4-1/2" inner x 7-1/2" outer

2. Prepare the Fireplace Top Spacers

1. The two (2) 4-3/8” standoff spacers on top of the fireplace cabinet are shipped flat *(**Figure 8**)*.
2. Bend the standoffs as shown *(**Figure 8**)*:
3. Align the holes in the standoff with the holes in the fireplace top, and secure with the supplied screws *(**Figure 8**)*.

Figure 8 - Standoffs

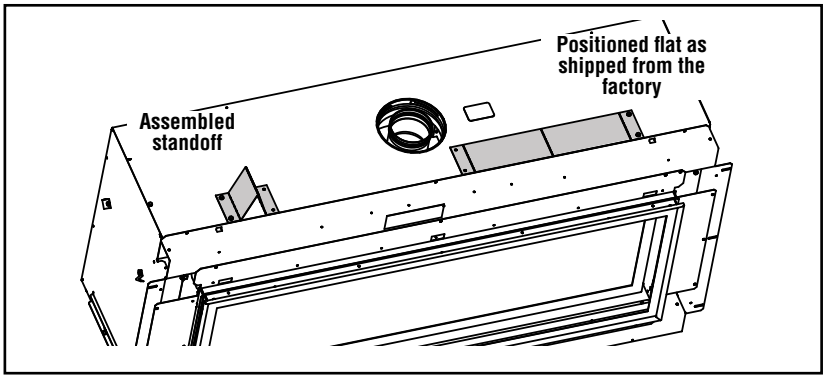

Route the Gas Supply Line into the Fireplace

1. Route a 1/2” (13 mm) gas line to the left side of the fireplace *(**Figure 9**)*.
2. Route the gas line through the gas supply line access opening *(**Figure 10**)*.

NOTE: The gas supply line should not be connected to the appliance until step 11. **Connect the Gas Line** *(**Page 37**)*.

NOTE: Gas lines must be routed, assembled, and made of materials that are in strict accordance with local codes and regulations. Never use galvanized or plastic pipe.

NOTE: See ***Page 54*** for more information on **Accessing the Control Compartment**.

NOTE: If gas shutoff valve on the fireplace is desired, surround kit must be used. Refer the gas line routing included in the surround instructions.

NOTE: All codes require a shutoff valve mounted in the supply line. ***Figure 31*** *(**Page 38**)* illustrates the method for connecting the gas supply. The flex-line method is acceptable in the U.S., however, Canadian requirements vary depending on locality. Installation must be in compliance with local codes. The provided gas-line shutoff valve (located in the control compartment) is intended as a service shutoff. National and local codes may require installation of a second gas-line shutoff valve (not provided) in a readily accessible location. Consult local codes. It is the responsibility of the plumber to provide an accessible shutoff.

Figure 9 - Routing the gas line through the framing

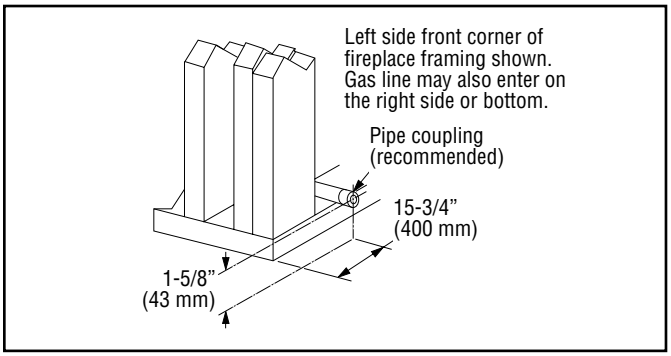

Figure 10 - Routing the gas line into the fireplace

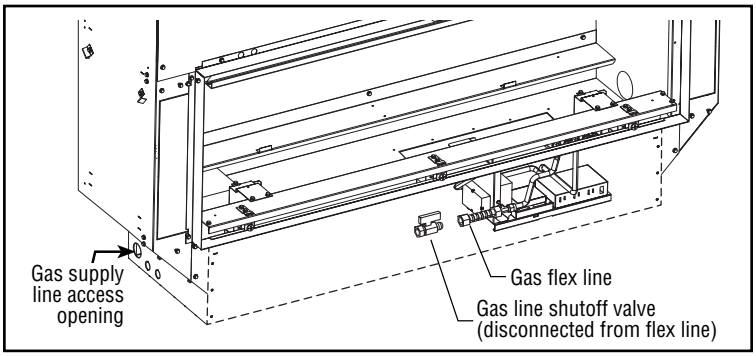

Proper Sizing of Gas Line

Properly size and route the gas supply line from the supply regulator to the area where the appliance is to be installed per requirements outlined in the National Fuel Gas Code, NFPA 54—latest edition (USA) or CAN/CGA-B149.1—latest edition (Canada).

NOTE:

- All fireplaces are factory-equipped with a flexible gas line connector and 1/2” shutoff valve *(**Figure 31**)*.
- See **Massachusetts Horizontal Vent Requirements** for additional requirements for installations in the state of Massachusetts in the USA.
- A pipe joint compound rated for gas should be used on the threaded joints. Ensure propane-resistant compounds are used in propane applications. Be very careful that the pipe compound does not get inside the pipe.
- A sediment trap in the supply line as close as possible to the fireplace is recommended.
- Check with the local building official for local code requirements (e.g., Are below grade penetrations of the gas line allowed?, etc).

⚠ CAUTION

If propane is used, be aware that with a tank that is too small (i.e., under 100 lbs, if this is the only gas appliance in the dwelling—see NPFA 58), there may be a loss of pressure. This can result in insufficient fuel delivery that can cause sooting, delayed ignition, or other malfunctions. Any damage resulting from an improper installation is not covered by the limited warranty.

3. Rough in the Electrical Supply, if Needed

1. As necessary, rough in the fireplace electrical supply per NEC and local codes.

4. Place the Fireplace in the Framing and Secure

1. Secure the fireplace to the side framing members using the unit’s nailing flanges —one top and bottom on each side of the fireplace front. Use 8d nails or the equivalent.

NOTE: Nailing flanges, combustible members, and screw heads in areas directly adjacent to the nailing flanges are EXEMPT from the 1/2” clearance to combustible requirements for the firebox outer wrapper. Combustible framing may be in direct contact with the nailing flanges and may be located within 1/2” of screw heads and the firebox wrapper in areas adjacent to the nailing flanges.

VENT SYSTEM PREPARATION

5. Select a Horizontal or Vertical Vent System

1. With the fireplace secured in the framing, determine the vent route and identify the exterior termination location. The following sections describe vertical (roof) and horizontal (exterior wall) vent applications. Use only approved vent components *(**Pages 47-48**)*.

NOTE: This fireplace must be vented directly to the outside.

⚠ WARNING

The vent system may not service multiple appliances, and must never be connected to a flue serving a separate solid fuel burning appliance.

NOTE: The vent pipe is tested to be run inside an enclosed wall (such as a chase). There is no requirement for inspection openings in the enclosing wall at any of the joints in the vent pipe.

6. Install the Vent Restrictor (if necessary)

1. Use the vent run descriptions in ***Figure 11*** to determine if a vent restrictor is necessary.
2. If necessary, assemble the vent restrictor and wings as detailed in ***Figures 12*** and ***13***.
3. If necessary, install the appropriate vent restrictor with the flaps facing up *(**Figure 13**)*. The vent restrictor is held in place by friction. The vent restrictor must not be visible inside the firebox.
   NOTE: If the baffle and back panel are installed, remove them before installing the vent restrictor.
   NOTE: The vent restrictor is shipped in the firebox.

Figure 11 - When to use a vent restrictor

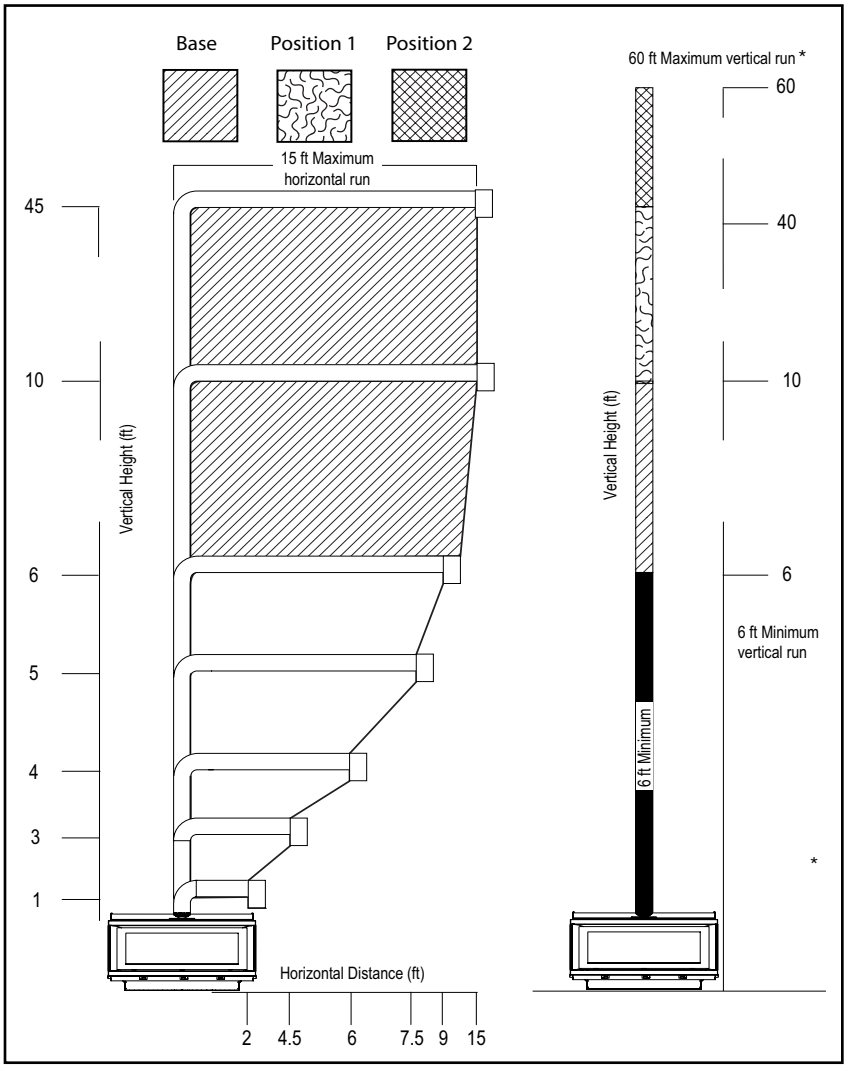

Figure 12 - Vent restrictor installation, Top vent

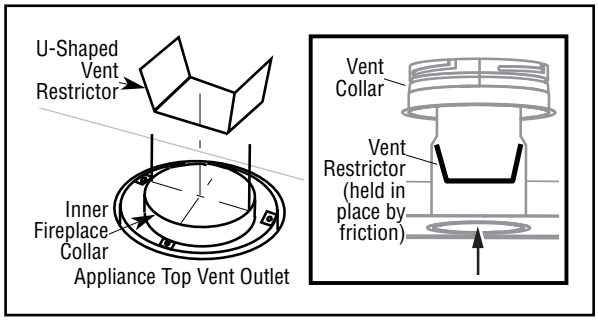

Figure 13 - Vent restrictor assembly

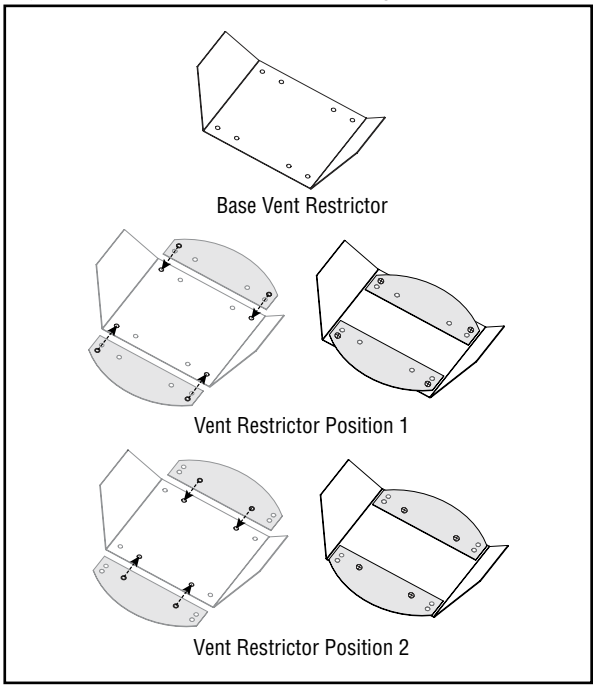

*** For straight runs or runs with elbows as illustrated in Vertical Vent Figures/Tables starting on *Page 27*.**

Vent Restrictor with Vertical Terminations

When vertically terminating the vent system through the roof and using the vent restrictor, install the vent restrictor in the top vent of the fireplace outlet.

If installing more than 6 ft of vertical venting, install the restrictor ***(Figure 12)***, from inside or outside the unit, in the inner fireplace collar. The vent restrictor is held in place by friction.

Vent Restrictor with Horizontal Terminations

When horizontally terminating a vent system with a vertical vent run up to 4 ft through an exterior wall, no vent restrictor is required.

If installing more than 4 ft of vertical venting, install the restrictor ***(Figure 12)***, from inside or outside the unit, in the inner fireplace collar. The vent restrictor is held in place by friction.

Connecting the vent pipe

Secure Vent® SV4.5 direct-vent system components are unitized concentric pipe components featuring positive twist lock connections ***(Figures 14*** and ***15)***. All of the fireplaces covered in this document are fitted with collars having locking inclined channels. The dimpled end of the vent components fit over the fireplace/vent collar to create the positive twist lock connection.

1. Align the dimpled end over the collar, adjusting the radial alignment until the four (4) locking dimples are aligned with the inlet of the four (4) inclined channels on the collar *(**Figure 14**)*.
2. Push the vent component against the collar until it fully engages, then twist the component clockwise, running the dimples down and along the incline channels until they seat at the end of the channels.

   NOTE: The unitized design of the Secure Vent® components will engage and seal both the inner and outer vent pipe.
3. If desired, a #6 x 1/2” sheet metal screw can be used at the joint, but is not required as the pipe will securely lock when twisted.

Where required, a telescopic vent section (SV4.5LA) may be used to provide the installer with an option to install in tight and confined spaces, or where the vent run made up of fixed length pieces develops a joint in a undesirable location, or will not build up to the required length. The telescopic vent section has an effective length of from 1-1/2” to 7-1/2” (38 to 191 mm). The telescopic vent section is fitted with a locking inclined channel end (identical to a normal vent section component) and a plain end with three (3) pilot holes. Slip the plain end over the locking channel end of a standard SV4.5 vent component the required distance and secure with three (3) screws.

Figure 14 - Connecting vent components

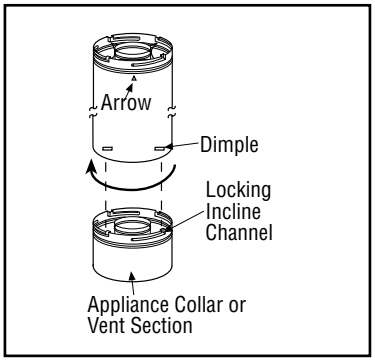

Figure 15 - Connected vent components

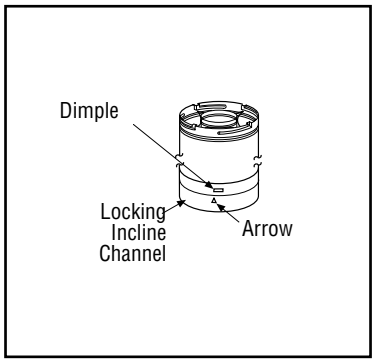

Figure 16 - Elbow Dimensions

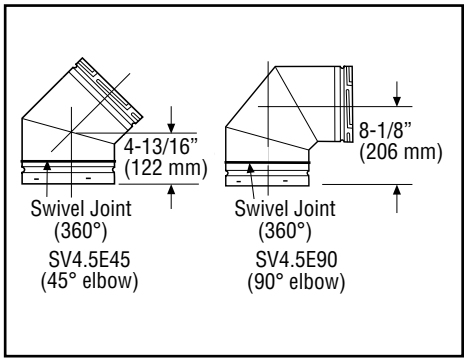

Vent elbows

Vent elbows are available in 90° and 45° configurations. Refer to ***Figure 16*** for the SV4.5E45 and SV4.5E90 elbow dimensions. The elbows feature a twist section to allow them to be routed about the center axis of their initial collar section to align with the required direction of the next vent run element. Two (2) 45° elbows may be used in place of one 90° elbow. When planning vent runs, make allowances for elbows.

NOTE: A 90° elbow may NOT be attached directly to the appliance collar. A minimum of 6” of vent pipe must be used between the fireplace collar and a 90° elbow. An elbow is accepatble as 1 ft of vertical rise.

1. Rotate the elbow in a clockwise direction (to avoid the possibility of unlocking any of the previously connected vent sections) for proper alignment *(**Figure 16**)*. See **Connecting the vent pipe** for more information.

Vent section length table

Tables 16** and **17 will assist calculating how many vent sections are needed for the planned vent configuration. When a vent section is engaged with another section, its effective length will be 1-1/2” shorter.

Table 16 - Effective Vent Length

Model	Effective Length
SV4.5L6	4-1/2”
SV4.5L12	10-1/2”
SV4.5L24	22-1/2”
SV4.5L36	34-1/2”
SV4.5L48	46-1/2”

Table 17 - Vent Section Length

Nominal Section Length (in.)		6	12	24	36	48	Total Qty
Net Section Length (in.)		4.5	10.5	22.5	34.5	46.5	
Height of Vent		Number of Vent Sections					
in.	ft						
4.5	0.375	1	0	0	0	0	1
9	0.75	2	0	0	0	0	2
10.5	0.875	0	1	0	0	0	1
15	1.25	1	1	0	0	0	2
22.5	1.875	0	0	1	0	0	1
31.5	2.625	0	3	0	0	0	3
34.5	2.875	0	0	0	1	0	1
37.5	3.125	1	1	1	0	0	3
43.5	3.625	0	2	1	0	0	3
45	3.75	0	0	2	0	0	2
46.5	3.875	0	0	0	0	1	1
51	4.25	1	0	0	0	1	2
55.5	4.625	0	1	2	0	0	3
57	4.75	0	0	1	1	0	2
67.5	5.625	0	0	3	0	0	3
69	5.75	0	0	0	2	0	2
73.5	6.125	1	0	0	2	0	3
79.5	6.625	0	1	0	2	0	3
81	6.75	0	0	0	1	1	2
91.5	7.625	0	0	2	0	1	3
93	7.75	0	0	0	0	2	2
97.5	8.125	1	0	0	0	2	3
103.5	8.625	0	0	0	3	0	3
108	9	1	0	0	3	0	4
117	9.75	1	0	5	0	0	6
118.5	9.875	1	1	0	3	0	5
126	10.5	0	0	1	3	0	4
130.5	10.875	1	0	1	3	0	5
135	11.25	0	0	6	0	0	6
139.5	11.625	0	0	0	0	3	3
142.5	11.875	1	0	0	4	0	5
144	12	1	0	0	0	3	4
154.5	12.875	1	1	0	0	3	5
160.5	13.375	0	2	0	0	3	5
172.5	14.375	0	0	0	5	0	5
177	14.75	1	0	0	5	0	6
186	15.5	0	0	0	0	4	4
196.5	16.375	0	1	0	0	4	5
207	17.25	0	0	0	6	0	6
211.5	17.625	1	0	0	6	0	7
217.5	18.125	0	1	0	6	0	7
229.5	19.125	0	0	1	6	0	7
232.5	19.375	0	0	0	0	5	5
241.5	20.125	0	0	0	7	0	7
246	20.5	1	0	0	7	0	8

Nominal Section Length (in.)		6	12	24	36	48	Total Qty
Net Section Length (in.)		4.5	10.5	22.5	34.5	46.5	
Height of Vent		Number of Vent Sections					
in.	ft						
252	21	0	1	0	7	0	8
276	23	0	0	0	8	0	8
279	23.25	0	0	0	0	6	6
280.5	23.375	1	0	0	8	0	9
289.5	24.125	0	1	0	0	6	7
301.5	25.125	0	0	1	0	6	7
310.5	25.875	0	0	0	9	0	9
325.5	27.125	0	0	0	0	7	7
330	27.5	1	0	0	0	7	8
345	28.75	0	0	0	10	0	10
349.5	29.125	1	0	0	10	0	11
372	31	0	0	0	0	8	8
379.5	31.625	0	0	0	11	0	11
418.5	34.875	0	0	0	0	9	9
465	38.75	0	0	0	0	10	10
475.5	39.625	0	1	0	0	10	11
480	40	1	1	0	0	10	12
492	41	1	0	1	0	10	12
499.5	41.625	0	0	0	1	10	11
504	42	1	0	0	1	10	12
511.5	42.625	0	0	0	0	11	11
520.5	43.375	0	2	0	1	11	14
531	44.25	0	2	2	0	11	15
538.5	44.875	1	0	0	2	11	14
549	45.75	1	0	2	1	11	15
558	46.5	0	0	0	0	12	12
562.5	46.875	1	0	0	0	12	13
568.5	47.375	0	1	0	0	12	13
573	47.75	1	1	0	0	12	14
580.5	48.375	0	0	1	0	12	13
589.5	49.125	0	1	2	2	10	15
595.5	49.625	1	1	1	0	12	15
604.5	50.375	0	0	0	0	13	13
615	51.25	0	1	0	0	13	14
625.5	52.125	0	2	0	0	13	15
631.5	52.625	1	0	1	0	13	15
637.5	53.125	0	1	1	0	13	15
651	54.25	0	0	0	0	14	14
655.5	54.625	1	0	0	0	14	15
672	56	0	2	0	0	14	16
678	56.5	1	0	1	0	14	16
688.5	57.375	1	1	1	0	14	17
697.5	58.125	0	0	0	0	15	15
702	58.5	1	0	0	0	15	16
712.5	59.375	1	1	0	0	15	17
720	60	0	0	1	0	15	16

Clearance to combustibles

Maintain the minimum clearance to combustibles (e.g., framing, attic, ceiling insulation, etc.).

For all vertical runs:

- 1” (26 mm) from all sides

NOTE: Attic insulation shield (H3907) must be installed when blown or loose-fill insulation is used, and is recommended for all attic installations.

For all horizontal/inclined runs:

- 3” (77 mm) from the top
- 1” (26 mm) from the sides
- 1” (26 mm) from the bottom

7. Install the Vent System

Install the Vertical Termination Vent System

These instructions should be used as a guideline and do not supersede local codes in any way. Install venting with the most restrictive requirements as outlined in these instructions, local codes, these instructions, the current National Fuel Gas Code (ANSI-Z223.1) in the USA or the current standards of CAN/CGA-B149.1 in Canada.

Ensure clearances are in accordance with local installation codes and the requirements of the gas supplier.

Dégagement conforme aux codes d’installation locaux et aux exigences du foumisseunde gaz.

Vertical vent systems terminate through the roof. The minimum vent height above the roof and/or adjacent walls is specified in ANSI Z223.1 (In Canada, the current CAN/CGA-B149.1 installation code) by major building codes. Always consult your local codes for specific requirements. A general guide to follow is the gas vent rule ***(Table 6)***.

The following figures and their associated vertical vent tables illustrate the various configurations that are possible for use with these fireplaces. Secure Vent® pipe is shown in these figures; Secure Flex® pipe may also be used. A table summarizes each configuration’s minimum and maximum vertical and horizontal length parameters for a variety of applications.

1. Refer to ***Figures 17 and 22***, ***Tables 19***, and ***20*** on ***Pages 27-28*** to select the type of vertical installation desired. Elbows are available in 90° and 45° configurations. Refer to ***Figure 16*** on ***Page 22*** for the SV4.5E45 and SV4.5E90 elbow dimensional specifications.

Vertical (Straight) Installation

1. **Determine the number of straight vent sections required**—See **Effective Vent Length on *Pages 22-23*** for more information. Plan the vent lengths so that a joint does not occur at the intersection of ceiling or roof joists.

Figure 17 - Vertical (Straight) Installation

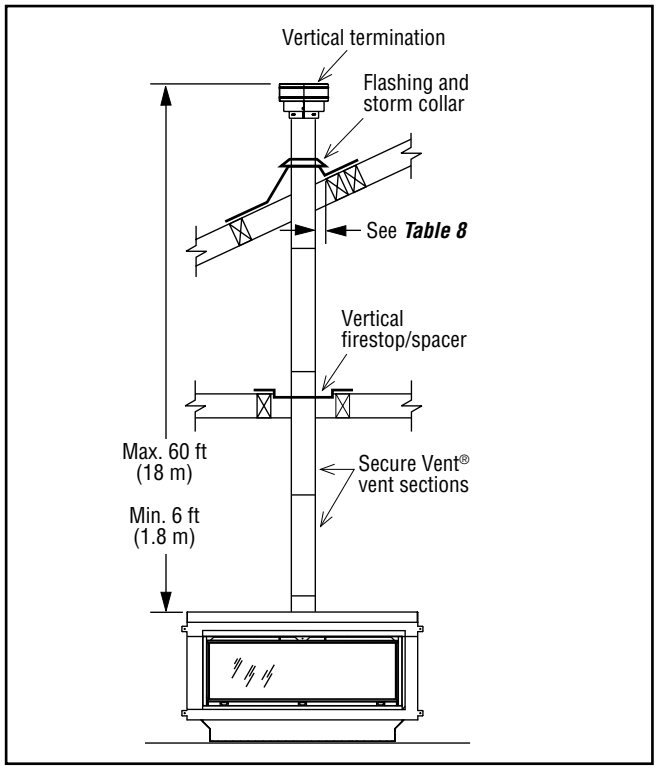

Vertical (Offset) Installation

1. **Analyze the vent route and determine the number of vent sections and elbows required**—See **Effective Vent Length on *Pages 22-23*** for more information. Plan the venting so that a joint does not occur in the ceiling or roof joists. Allow for elbows ***(Figure 16)***. Maintain clearances to combustibles equal to or greater than minimum specified in these instructions ***(Page 24)***.

2. **Frame the ceiling opening**—Use a plumb line from the ceiling above the fireplace to locate the center of the vertical run. Cut and/or frame an opening, 10-1/2 x 10-1/2" (267 x 267 mm) inside dimensions, about this center mark ***(Figure 18)***. Vertical firestop/spacer must be used anywhere vent pipe passes through a combustible floor or ceiling.

Figure 18 - Framing the ceiling opening

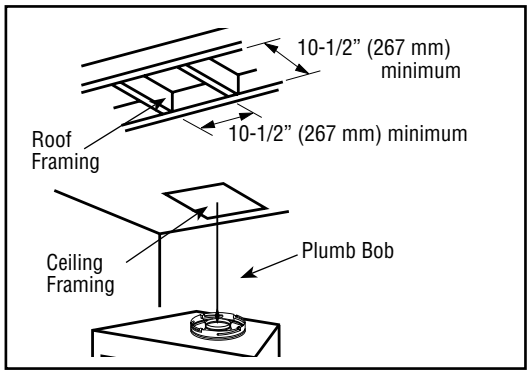

3. **Attach the vent components to the fireplace**—See **Connecting the vent pipe on *Page 22***.

4. **Attach the vent components to each other**—See **Connecting the vent pipe on *Page 22***.

5. **Install firestop/spacer at ceiling**—When using Secure Vent®, use SV4.5VF firestop/spacer at ceiling joists; when using Secure Flex®, use SF4.5VF firestop/spacer. If there is living space above the ceiling level, the firestop/spacer must be installed on the bottom side of the ceiling. If attic space is above the ceiling, the firestop/spacer must be installed on the top side of the joist. Route the vent sections through the framed opening and secure the firestop/spacer with 8d nails or other appropriate fasteners at each corner.

   Remember to maintain 1" (26 mm) clearance to combustibles, framing members, and attic or ceiling insulation when running vertical chimney sections. The gap between the vent pipe and a vertical firestop can be sealed with non-combustible caulking.

   NOTE: Attic insulation shield (H3907) must be installed when blown or loose-fill insulation is used, and is recommended for all attic installations.

6. **Support the vertical vent run sections**—Support the vertical portion of the venting system every 8 ft (2.4 m) above the fireplace vent outlet. One method of support is by utilizing field provided support straps (conventional plumber's tape). Secure the plumber's tape to the framing members with nails or screws. Loop the tape around the vent, securing the ends of the tape to the framing. If desired, sheet metal screws #6 x 1/2" length may be used to secure the support straps to the vent pipe ***(Figure 19)***.

   NOTE: Proper venting support is very important. Never use the fireplace to support the weight of the venting.

Figure 19 - Supporting the Vertical Vent Run

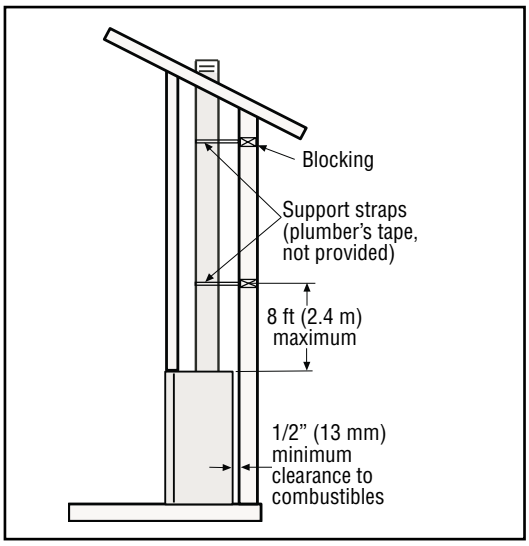

7. **Change vent direction of horizontal/inclined run**—Install the SV4.5E45 and SV4.5E90 elbows in the same manner as the straight vent sections. See **Vent elbows on *Page 22*** for more information.

8. **Continue installation of horizontal/inclined sections**—Continue with the installation of the straight vent sections in horizontal/inclined run. Install support straps every 5 ft (1.52 m) along horizontal/inclined vent runs using conventional plumber's tape in a direction away from the fireplace.

   Rise per foot run ratios are acceptable all the way to level. For best results, maintain the horizontal/inclined run in a straight (no dips), slightly elevated plane of approximately 1/4" per 1 ft (20 mm per 1 m).

   Maintain the required clearances to combustibles *(**Page 24**)*.

9. **Frame the roof opening**—Identify the location for the vent at the roof. Cut and/or frame opening *(**Table 18**)*.

Table 18 - Roof Framing Dimensions

Pitch	C	D
0/12	10-1/2" (267 mm)	10-1/2" (267 mm)
6/12	10-1/2" (267 mm)	12" (305 mm)
12/12	10-1/2" (267 mm)	17-3/4" (451 mm)

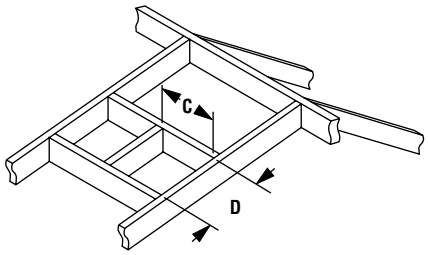

10. **Install the roof flashing**—Extend the vent sections through the roof structure. Install the roof flashing over the vent section and position such that the vent column rises vertically (use carpenters level). Nail along perimeter to secure flashing or adjust roofing to overlap the flashing edges at top and sides only and trim where necessary. Seal the top and both sides of the flashing with waterproof caulking. The flashing must overlap the roofing.

11. **Install the storm collar**—Install the storm collar, supplied with the flashing, over the vent/flashing joint *(**Figure 20**)*. Loosen the storm collar screw. Slide collar down until it meets the top of the flashing. Tighten the adjusting screw. Apply non-combustible caulking or mastic around the circumference of the joint to provide a water tight seal.

Figure 20 - Installing the Storm Collar

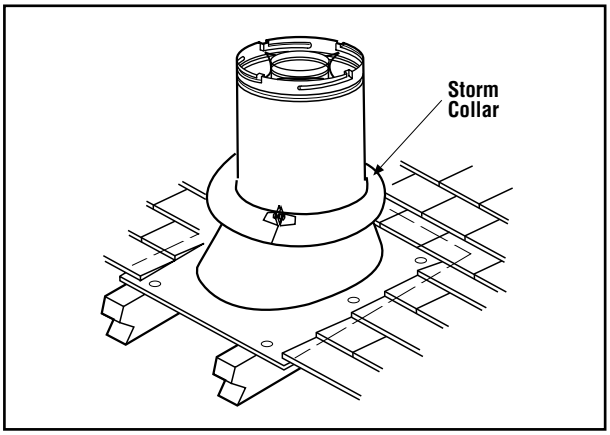

Figure 21 - Installing the Vertical Termination

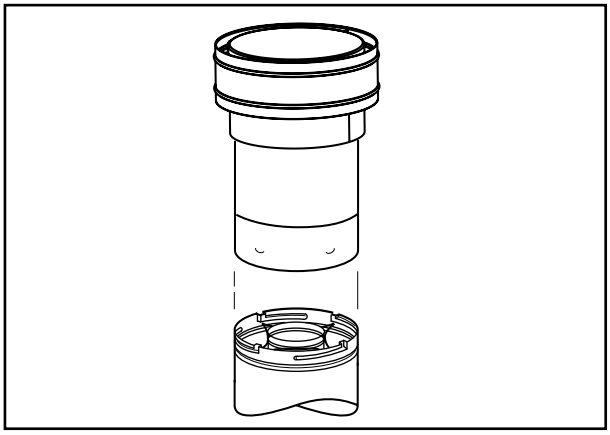

12. **Install the vertical termination**—Extend the vent sections to the correct height *(**Table 6**)*. The SV4.5CGV-1 Vertical Termination *(**Figure 21**)* installs in the exact same fashion as any other Secure Vent® section.

    If the vent system extends more than 5 ft (1.5 m) above the roof flashing, stabilizers are required. Additional screws may be used at section joints for added stability. Guide wires or roof support assemblies may be attached to the joint for additional support on multiple joint configurations.

Vertical Vent Figures/Tables

NOTE: Rise per foot run ratios are acceptable all the way to level. For best results, maintain the horizontal/inclined run in a straight (no dips), slightly elevated plane of approximately 1/4” per 1 ft (20 mm per 1 m).

NOTE: SV4.5VF (Secure Vent), SF4.5VF (Secure Flex) firestop/spacer must be used anytime vent pipe passes through a combustible floor or ceiling. SV4.5HF (Secure Vent), SF4.5HF (Secure Flex)firestop/spacer must be used anytime vent pipe passes through a combustible wall.

NOTE: Two (2) 45° elbows may be used in place of one (1) 90° elbow. The same rise to run ratios, as shown in the venting figures for 90° elbows, must be followed if 45° elbows are used.

NOTE: An elbow is acceptable as 1 ft of vertical rise, except where an elbow is the only vertical component in the system.

⚠ WARNING

Do NOT join separate sections of concentric flexible vent pipe.

Figure 22 - Top Vent—Straight

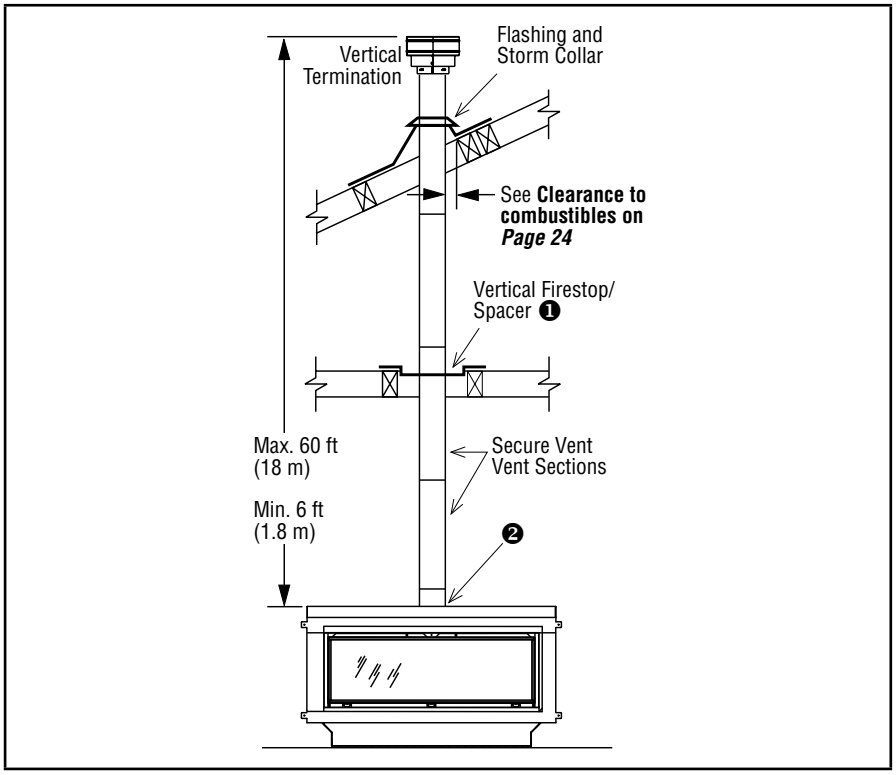

Install the U-shaped vent restrictor in any vent run with more than 6 ft of vertical rise. See *Page 21* for more information.

❶ Vertical firestop/spacer must be used anywhere vent pipe passes through a combustible floor or ceiling. Horizontal firestop/spacer must be used anywhere vent pipe passes through a combustible wall.

❷ Install the provided vent restrictor, if required.

Table 19 - Top Vent—Two 90° Elbows

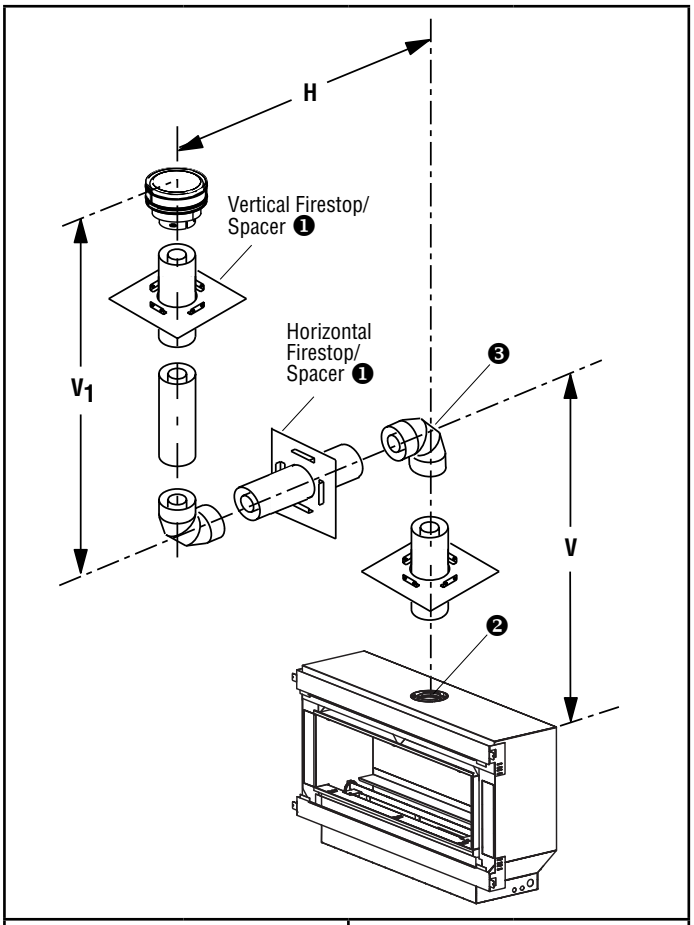

Maximum total H		Minimum total V	
feet	meters	feet	meters
5	1.524	3.3	1.006
10	3.1	6.5	1.981
15	4.65	10	3.048
20	6.096	13.5	4.115

Total H = Max. 20 ft (6.096 m)

Total H + Total V = Max. 60 ft (18.3 m)

Install the U-shaped vent restrictor in any vent run with more than 6 ft of vertical rise. See *Page 21* for more information.

A 20-ft total Horizontal vent run requires min. 13.5 ft total vertical venting.

❶ Vertical firestop/spacer must be used anywhere vent pipe passes through a combustible floor or ceiling. Horizontal firestop/spacer must be used anywhere vent pipe passes through a combustible wall.

❷ Install the provided vent restrictor, if required.

❸ A 90° elbow may NOT be attached directly to the appliance collar. A minimum 6” pipe section must be used between the fireplace collar and a 90° elbow.

Table 20 - Top Vent—Three Elbows

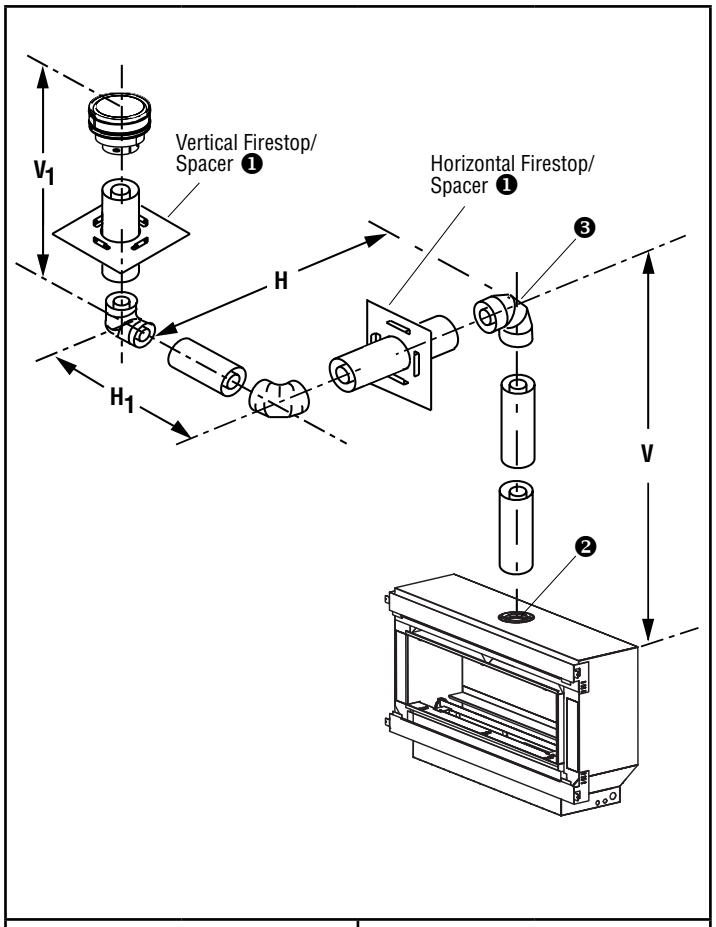

Maximum total H		Minimum total V	
feet	meters	feet	meters
5	1.524	3.3	1.006
10	3.1	6.5	1.981
15	4.65	10	3.048
20	6.096	13.5	4.115

Total H = Max. 20 ft (6.096 m)

Total H + Total V = Max. 60 ft (18.3 m)

Install the U-shaped vent restrictor in any vent run with more than 6 ft of vertical rise. See *Page 21* for more information.

A 20-ft total Horizontal vent run requires min. 13.5 ft total vertical venting.

❶ Vertical firestop/spacer must be used anywhere vent pipe passes through a combustible floor or ceiling. Horizontal firestop/spacer must be used anywhere vent pipe passes through a combustible wall.

❷ Install the provided vent restrictor, if required.

❸ A 90° elbow may NOT be attached directly to the appliance collar. A minimum 6” pipe section must be used between the fireplace collar and a 90° elbow.

Install the Horizontal Termination Vent System

These instructions should be used as a guideline and do not supersede local codes in any way. Install venting with the most restrictive requirements as outlined in these instructions, local codes, these instructions, the current National Fuel Gas Code (ANSI-Z223.1) in the USA or the current standards of CAN/CGA-B149.1 in Canada.

Ensure clearances are in accordance with local installation codes and the requirements of the gas supplier.

Dégagement conforme aux codes d'installation locaux et aux exigences du foumisseunde gaz.

Horizontal vent systems terminate through an outside wall. Building Codes limit or prohibit terminating in specific areas *(**Table 7**)*.

The following figures and their associated horizontal vent tables illustrate the various configurations that are possible for use with these fireplaces. Secure Vent® pipe is shown in these figures; Secure Flex® pipe may also be used. A table summarizes each configuration's minimum and maximum vertical and horizontal length parameters for a variety of applications. For more information on connecting the vent pipe, see ***Page 22***.

Assure that adequate space between the bottom of the horizontal run and the attic is provided so that blown in insulation does not contact the vent.

Figure 23 - Typical Horizontal Vent Installation

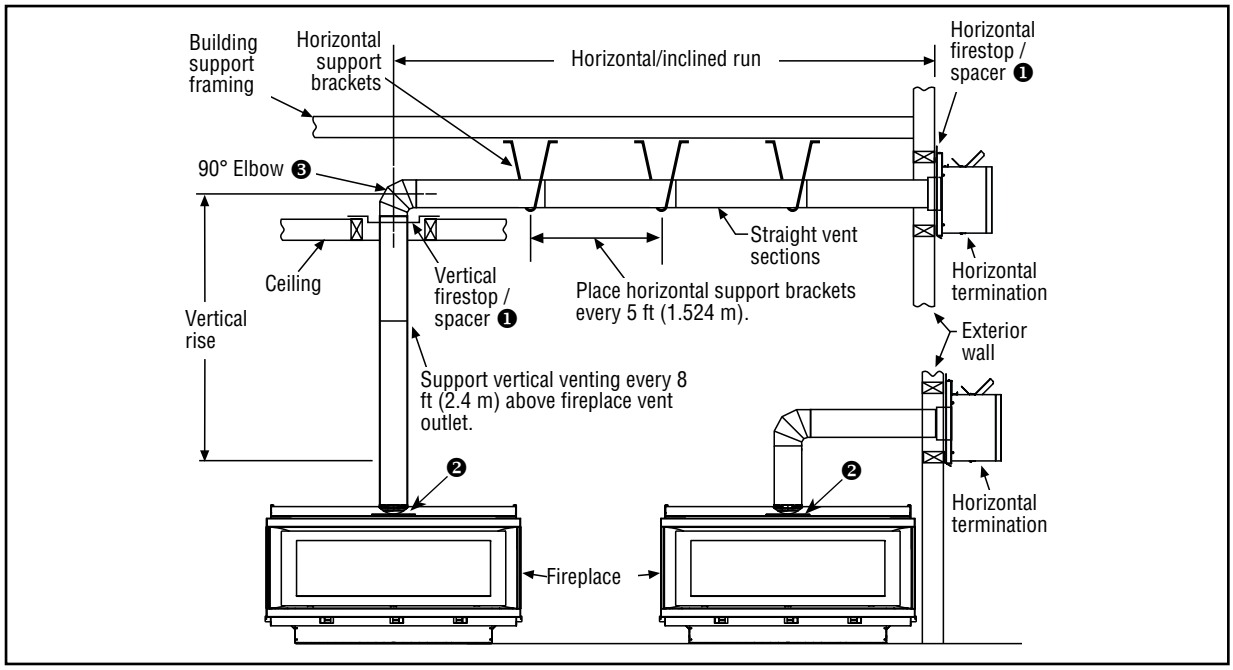

❶ Vertical firestop/spacer must be used anywhere vent pipe passes through a combustible floor or ceiling. Horizontal firestop/spacer must be used anywhere vent pipe passes through a combustible wall.

❷ Install the provided vent restrictor, if required.

NOTE: A 90° elbow may NOT be attached directly to the appliance collar. A minimum 6" pipe section must be used between the fireplace collar and a 90° elbow.

1. **Analyze the vent route and determine the number of vent sections and elbows required**—See **Effective Vent Length on *Pages 22-23*** for more information. Plan the venting so that a joint does not occur in the ceiling or roof joists. Allow for elbows *(**Figure 16**)*. Maintain clearances to combustibles equal to or greater than minimum specified in these instructions *(**Page 24**)*.
2. **Frame the exterior wall opening**—Locate the center of the vent outlet on the exterior wall *(**Table 10**)*. Cut and/or frame an opening, 10-1/2 x 12-1/8" (267 x 308 mm) inside dimensions, about this center. Horizontal firestop/spacer must be used anywhere vent pipe passes through a combustible wall.
3. **Frame the ceiling opening**—If the vertical route is to penetrate a ceiling, use plumb line to locate the center above the fireplace. Cut and/or frame an opening, 10-1/2 x 10-1/2" (267 x 267 mm) inside dimensions, about this center *(**Figure 21**)*.
4. **Attach the vent components to the fireplace**—See **Connecting the vent pipe on *Page 22***.
5. **Attach the vent components to each other**—See **Connecting the vent pipe on *Page 22***.

6. **Install the firestop/spacer at the ceiling**—When using Secure Vent®, use SV4.5VF firestop/spacer at ceiling joists; when using Secure Flex®, use SF4.5VF firestop/spacer. If there is living space above the ceiling level, the firestop/ spacer must be installed on the bottom side of the ceiling. If attic space is above the ceiling, the firestop/spacer must be installed on the top side of the joist. Route the vent sections through the framed opening and secure the firestop/spacer with 8d nails or other appropriate fasteners at each corner.
   Maintain 1" (26 mm) clearance to combustibles, framing members, and attic or ceiling insulation when running vertical chimney sections.
   NOTE: Attic insulation shield (H3907) must be installed when blown or loose-fill insulation is used, and is recommended for all attic installations.
7. **Support the vertical run sections**—On the vertical run, support the venting system every 8 ft (2.4 m) above the fireplace vent outlet with field provided support straps (Plumber's tape). Attach the straps to the vent pipe and secure to the framing members with nails or screws *(**Figure 23**)*.
   NOTE: Proper venting support is very important. Never use the fireplace to support the weight of the venting.
8. **Change vent direction**—At transition from or to a horizontal/inclined run, install SV4.5E45 or SV4.5E90 elbows in the same manner as the straight vent sections. The elbows feature a twist section to allow them to be routed about the center axis of their initial collar section to align with the required direction of the next vent run element. Twist elbow sections in a clockwise direction only so as to avoid the possibility of unlocking any of the previously connected vent sections *(**Figure 16**)*.
9. **Continue installation of horizontal/inclined sections**—Continue with the installation of the straight vent sections in horizontal/inclined run. Install support straps every 5 ft. (1.52 m) along horizontal/inclined vent runs using conventional plumber's tape in a direction away from the fireplace or catalog number 96K93 *(**Figure 23**)*. Maintain the horizontal/inclined run in a straight (no dips), slightly elevated plane. The recommended incline is approximately 1/4" per 1 ft (20 mm per 1 m) horizontal, in a direction away from the fireplace. Smaller rise per foot run ratios are acceptable all the way to at or near level. Use a carpenter's level to measure from a constant surface and adjust the support straps as necessary.
   Maintain the required clearances to combustibles *(**Page 34**)*.
10. **Assemble the vent run to the exterior wall**—If not previously measured, locate the center of the vent at the exterior wall. Prepare the opening. Assemble the vent system until the terminus of the last section is within 5" (127 mm) to 8-1/2" (216 mm) inboard of the exterior surface to which the termination is to be attached *(**Figure 24**)*. If the terminus of the last section is not within this distance, use the telescopic vent section SV4.5LA, as the last vent section. ***Table 21*** lists the additional venting components needed (in addition to the termination and adaptor) for a range of wall thicknesses.
11. **Attach the termination adaptor**—Attach the adaptor (SV4.5RCH, provided with the termination) to the vent section or telescoping vent section, elbow or fireplace collar *(**Figure 24**)*.
    NOTE: If blown insulation is to be used, the through-wall shield kit (H5816) MUST be installed.
12. **Install the firestop/spacer at the exterior wall**—Install SV4.5HF (Secure Vent®), SF4.5HF (Secure Flex®) firestop/spacer over the opening at the exterior side of the framing, long side up, with the 3" spacer clearance at the top *(**Figure 24**)* and nail into place.
    NOTE: The firestop/spacer may also be installed over the opening at the interior side of the framing.
13. **Install the termination (**SV4.5HT-2 and SV4.5HTSS (42" models only)**)**—From outside the exterior wall, slide the collars of the termination onto the adaptor (the outer over the outer and the inner inside the inner) until the termination seats against the exterior wall surface to which it will be attached. Orient the housing of the termination with the arrow pointed upwards. Secure the termination to the exterior wall. The horizontal termination must not be recessed into the exterior wall or siding by more than the 1-1/4" (32 mm) *(**Figure 25**)*.
    NOTE: If the venting exits the building below grade, or close to grade, see **Installation Accessories on *Page 48* for available snorkel terminations. The termination must be above grade and above the expected level of snow accumulation.**
    NOTE: The vent termination is hot while in operation and for a period of time following the use of the fireplace. To prevent contact with hot surfaces, use a horizontal termination guard; available for purchase at your local dealer.

The horizontal terminations have been designed to perform in a wide range of weather conditions. They meet or exceed industry standards.

When selecting the locations of your horizontal terminations, **do not place the termination where water from eaves and adjoining rooflines may create a heavy flow of cascading water onto the termination cap**. If the cap must be placed where the possibility of cascading water exists, it is the responsibility of the builder to direct the water away from the termination cap by using gutters or other means.

Carefully follow the installation instructions for the termination, including the use of silicone caulking where required.

Figure 24 - Installing the Horizontal Termination

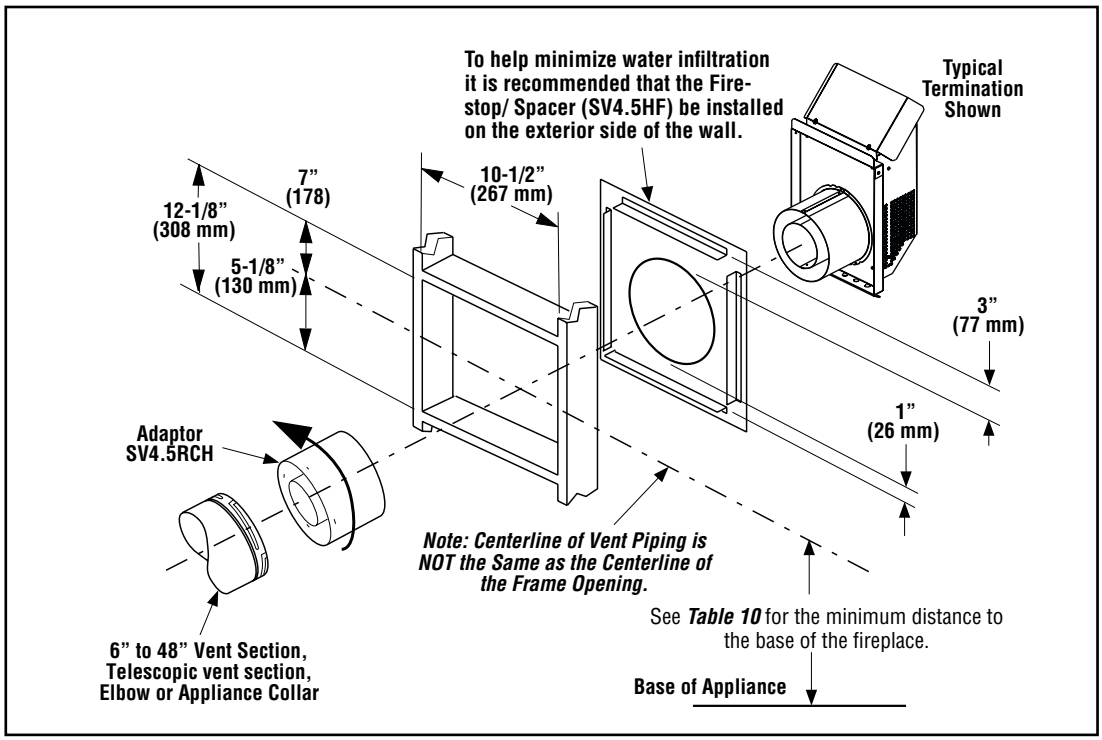

Figure 25 - Venting Connection and Exterior Wall Recessing of the Horizontal Termination

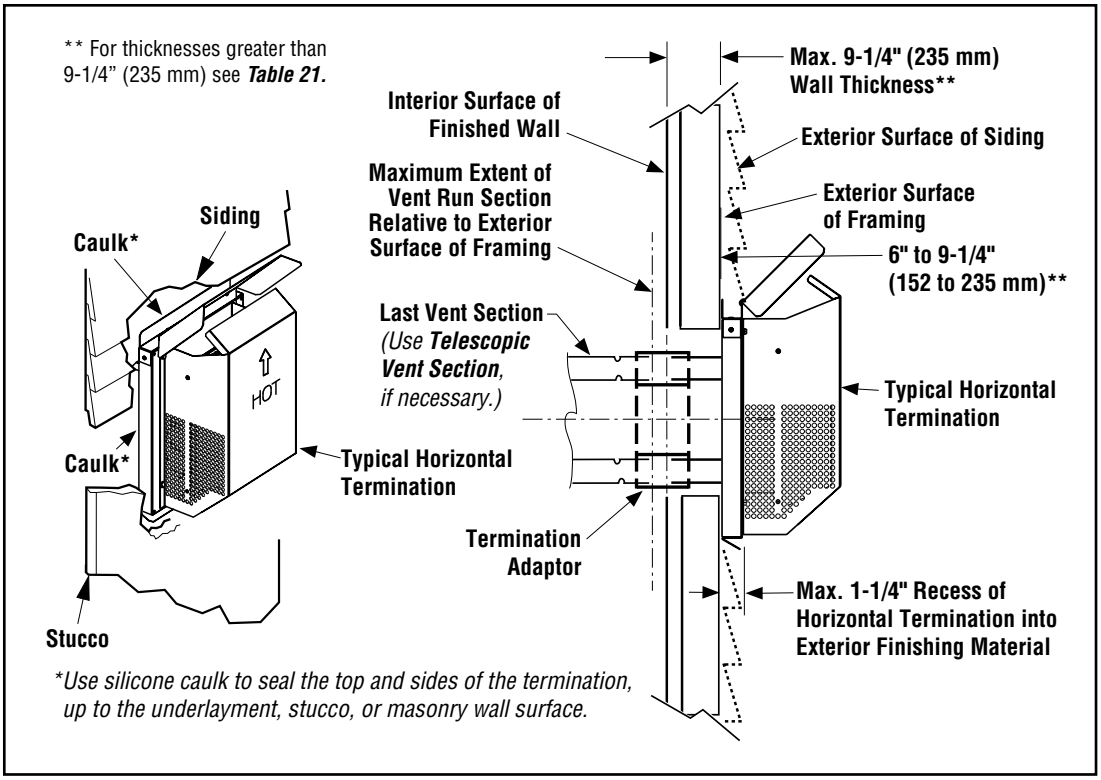

Table 21 - Venting Components Required for Various Exterior Wall Thicknesses, when using Typical Termination Kits

Vent Components Required	Exterior Wall Thickness
Termination Kit Only	6 to 9-1/4” (152 to 235 mm)
Termination Kit and 6” Vent Section (SV4.5L6)	10-3/4 to 14” (273 to 356 mm)
Termination Kit and 12” Vent Section (SV4.5L12)	16-3/4 to 20” (426 to 508 mm)
Termination Kit and Telescopic Section (SV4.5LA) and 6” vent section (SV4.5L6)	11-3/4 to 20” (299 to 508 mm)

Horizontal Vent Figures/Tables

NOTE: Secure Vent® rigid vent pipe and terminal are shown in the figures. Secure Flex® flexible vent pipe and terminal may also be used.

NOTE: Two (2) 45° elbows may be used in place of one (1) 90° elbow. The same rise to run ratios, as shown in the venting figures for 90° elbows, must be followed if 45° elbows are used.

NOTE: Rise per foot run ratios are acceptable all the way to level. For best results, maintain the horizontal/inclined run in a straight (no dips), slightly elevated plane of approximately 1/4” per 1 ft (20 mm per 1 m).

NOTE: SV4.5VF (Secure Vent), SF4.5VF (Secure Flex) firestop/spacer must be used any time vent pipe passes through a combustible floor or ceiling. SV4.5HF (Secure Vent), SF4.5HF (Secure Flex) firestop/spacer must be used any time vent pipe passes through a combustible wall.

⚠ WARNING

Do not join separate sections of concentric flexible vent together.

Table 22 - Top Vent—One 90° Elbow

Maximum total H		Minimum total V	
feet	meters	feet	meters
2	0.610	1	0.305
4.5	1.372	3	0.914
6	1.829	4	1.220
7.5	2.286	5	1.524
9	2.743	6	1.729
15	4.572	10	3.048

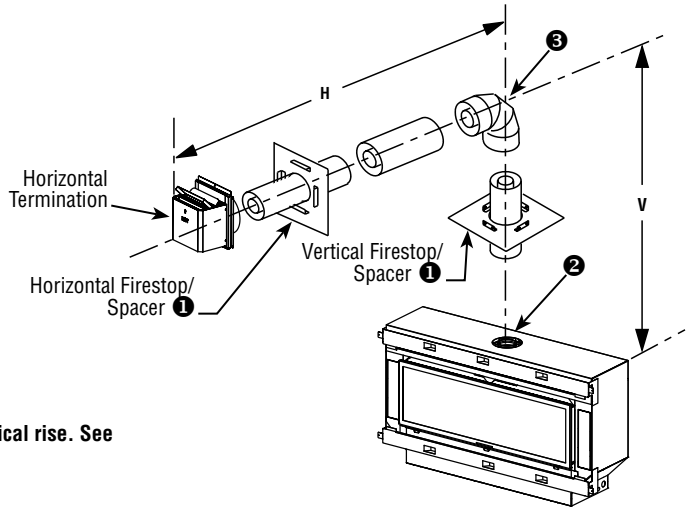

Total H = 15 ft (4.572 m) maximum

Total H + Total V = 60 ft (18.3 m) maximum

Install the U-shaped vent restrictor in any vent run with more than 6 ft of vertical rise. See *Page 20* for more information.

Small square termination (SV4.5HTSS) shown.

See ***Table 21*** as an aid in venting component selection for a particular range of exterior wall thicknesses.

15 ft total horizontal vent run requires a minimum of 10 ft total vertical vent.

❶ Vertical firestop/spacer must be used anywhere vent pipe passes through a combustible floor or ceiling. Horizontal firestop/spacer must be used anywhere vent pipe passes through a combustible wall.

❷ Install the provided vent restrictor, if required.

❸ A 90° elbow may NOT be attached directly to the appliance collar. A minimum 6” pipe section must be used between the fireplace collar and a 90° elbow.

Table 23 - Top Vent—Two 90° Elbows

Maximum total H		Minimum total V	
feet	meters	feet	meters
2	0.610	1	0.305
4.5	1.372	3	0.914
6	1.829	4	1.220
7.5	2.286	5	1.524
9	2.743	6	1.729
15	4.572	10	3.048

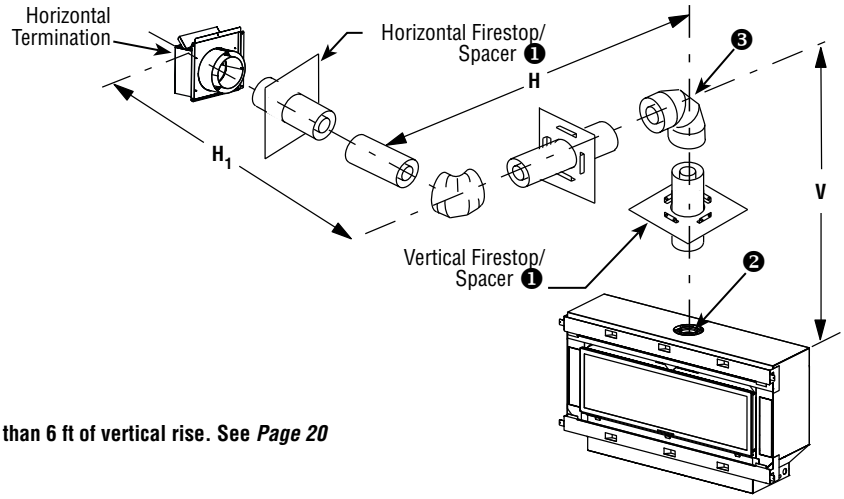

Total H = 15 ft (4.572 m) maximum

Total H + Total V = 60 ft (18.3 m) maximum

Install the U-shaped vent restrictor in any vent run with more than 6 ft of vertical rise. See *Page 20* for more information.

Small square termination (SV4.5HTSS) shown.

See ***Table 21*** as an aid in venting component selection for a particular range of exterior wall thicknesses.

15 ft total horizontal vent run requires a minimum of 10 ft total vertical vent.

❶ Vertical firestop/spacer must be used anywhere vent pipe passes through a combustible floor or ceiling. Horizontal firestop/spacer must be used anywhere vent pipe passes through a combustible wall.

❷ Install the provided vent restrictor, if required.

❸ A 90° elbow may NOT be attached directly to the appliance collar. A minimum 6” pipe section must be used between the fireplace collar and a 90° elbow.

Table 24 - Top Vent—Three 90° Elbows

Maximum total H		Minimum total V	
feet	meters	feet	meters
2	0.610	1	0.305
4.5	1.372	3	0.914
6	1.829	4	1.220
7.5	2.286	5	1.524
9	2.743	6	1.729
15	4.572	10	3.048

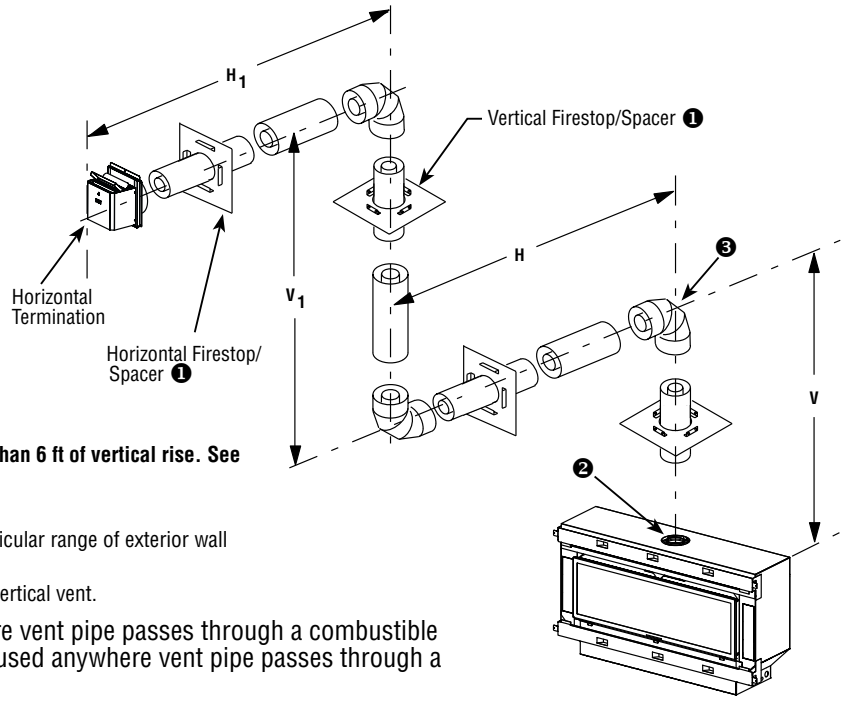

Total H = 15 ft (4.572 m) maximum

Total H + Total V = 60 ft (18.3 m) maximum

Install the U-shaped vent restrictor in any vent run with more than 6 ft of vertical rise. See *Page 20* for more information.

Small square termination (SV4.5HTSS) shown.

See ***Table 21*** as an aid in venting component selection for a particular range of exterior wall thicknesses.

15 ft total horizontal vent run requires a minimum of 10 ft total vertical vent.

❶ Vertical firestop/spacer must be used anywhere vent pipe passes through a combustible floor or ceiling. Horizontal firestop/spacer must be used anywhere vent pipe passes through a combustible wall.

❷ Install the provided vent restrictor, if required.

❸ A 90° elbow may NOT be attached directly to the appliance collar. A minimum 6” pipe section must be used between the fireplace collar and a 90° elbow.

Vertical or Horizontal Venting Using Secure Flex® Kits and Components

Secure Flex® venting kits and components may be used in any other vent installation where rigid Secure Vent® (SV4.5) direct-vent components can be used. All restrictions, clearances and allowances pertaining to rigid vent also apply to flexible vent. Do NOT modify Secure Flex kits . Also, do NOT join separate sections of flex vent together. Secure Flex kits can be installed on the end of a Secure Vent (SV4.5) rigid vent run, provided that doing so does not violate any of the venting length, height, routing, horizontal to vertical ratio requirements, or clearance considerations detailed in this manual.

Secure Flex kits come with an included adaptor that can be installed on the fireplace collar or the inclined channel end of the last Secure Vent (SV4.5) vent section in a rigid system in the exact same fashion as any other Secure Vent section. Align the dimpled end of the adaptor over the previously installed section or fireplace collar, adjusting the radial alignment until the four locking dimples of the adaptor are aligned with the inlets of the four incline channels of the last vent section or collar. Push on the adaptor until it is fully engaged, then twist the adaptor clockwise running the dimples down and along the incline channels until they seat at the end of the channels.

Figure 26 - Flexible Vent Adaptor

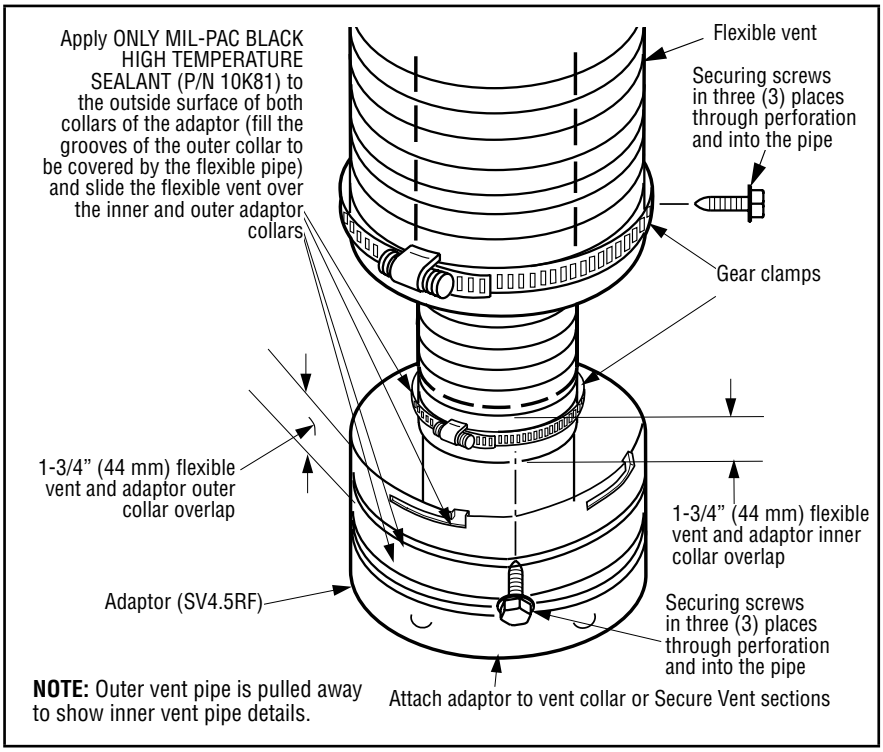

Figure 27 - Flexible Vent

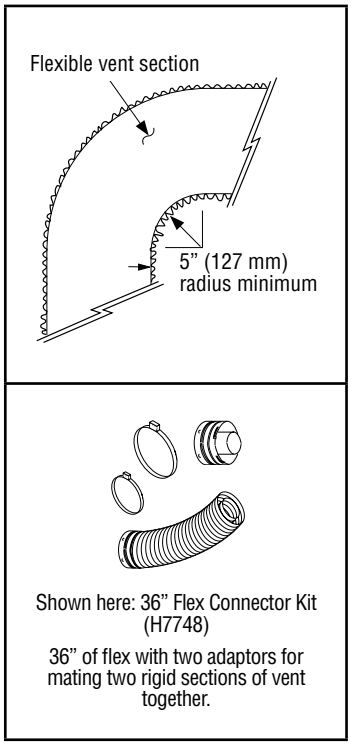

1. Install the Inner Flex Pipe.
   - **a.** Install the small gear clamp loosely around the inner flexible vent, then push it back out of the way.
   - **b.** Apply a bead of Mill-Pac Black (700 °F) high temperature sealant (P/N 10K81) to the inner adaptor collar, approximately 1/2" from the end.
   - **c.** Pull and extend the inner flexible vent.
   - **d.** Slide the inner flex vent over the adaptor collar at least 1-3/4".

   NOTE: Ensure the flex vent is free from damage or tears.

   - **e.** Slide the gear clamp down and tighten it fully to secure the flexible vent to the adaptor inner collar approximately 3/4" from the end of the flex.
   - **f.** Install three (3) sheet metal screws 120° apart through the flexible vent and into the adaptor collar just below the gear clamp to provide additional security to the connection.
2. Install the outer Flex Pipe.
   - **a.** Install the large gear clamp loosely around the outer flexible vent pipe, then push it back out of the way.
   - **b.** Apply a bead of Mill-Pac Black (700 °F) high temperature sealant (P/N 10K81) to the outer adaptor collar. Cover to the grooves of the collar that extend approximately 1" from the end and to the flat surface, approximately 1-3/8" from the end.
   - **c.** Pull and extend the outer flexible vent.
   - **d.** Slide the outer flexible vent over the adaptor collar. Ensure the flexible vent completely engages the adaptor collar 1-3/4" from the end, and that it is free from damage or tears.
   - **e.** Slide the gear clamp down and tighten it fully to secure the flexible vent to the adaptor outer collar approximately 3/4" from the end of the flexible vent.

f. Install three (3) sheet metal screws 120° apart through the flexible vent and into the adaptor collar just below the gear clamp to provide additional security to the connection.

3. Route the flexible vent.

NOTE: Ensure that the flexible vent is properly routed to provide the required clearance. Do NOT allow the flexible vent to bend in a radius tighter than 5” (127 mm) ***(Figure 27)***. Place the internal flexible vent spacers evenly and avoid kinking the inner vent. Support horizontal sections of flexible vent with metal straps at 2 ft (0.61 m) intervals.

4. Install firestop/spacers at ceiling and wall penetrations.
   - SF4.5 VF firestop/spacer for ceilings
   - SF4.5 HF firestop/spacer for walls

NOTE: See the appropriate sections and figures shown throughout the venting section for installation requirements.

5. Attach the flexible vent to the termination.

NOTE: Secure Flex® components can be purchased separately and attached to bulk lengths of Secure Flex flexible vent cut to size at the job site. Attach the flexible vent to the Secure Flex terminations as it was attached to the adaptor ***(Figure 26)***.

NOTE: Attach Secure Flex vent to Secure Flex terminations only. Do NOT substitute Secure Vent® terminations or Secure Vent adaptor for Secure Flex components. Secure Flex termination and adaptor collars are a different circumference than Secure Vent collars. Secure Flex vent has a longer center tube to improve ease-of-installation.

8. Complete the Field Wiring

⚠ CAUTION

The ground supply lead must be connected to the wire attached to the green ground screw located on the outlet box (see wiring diagrams). Failure to do so will result in a potential safety hazard. The appliance must be electrically grounded in accordance with local codes or, in the absence of local codes, the National Electrical Code, ANSI/NFPA 70—latest edition (in Canada, the current CSA C22.1 Canadian Electrical Code).

⚠ CAUTION

Label all wires prior to disconnection when servicing controls. Wiring errors can cause improper and dangerous operation. Verify proper operation after servicing.

⚠ ATTENTION

Au moment de l’entretien des commandes, étiquetez tous les fils avant de les débrancher. Des erreurs de câblage peuvent entraîner un fonctionnement inadéquat et dangereux.

Verify proper operation after servicing.

S’assurer que l’appareil fonctionne adéquatement une fois l’entretien terminé.

The gas valve is set in place and pre-wired at the factory.

Technical data

Supply Voltage, Remote Control Transmitter:
- (1) 3V Button cell battery

Supply Voltage, Wall Switch Receiver:
- 6.0 V (four (4) **AA** batteries)

Ambient temperature rating:
- 32–140 °F (0–60 °C)

Radio frequency:
- 433.92 MHz

Wire the fireplace

NOTE: Connection to the main power supply is only required if optional blower is installed.

1. Route a 3-wire, 120 Vac, 60 Hz, 1 ph power supply to the fireplace junction box.

NOTE: The junction box can be moved to the bottom of the box *(**Figure 30**)*. To move the junction box remove the cover plate, compress junction box to release it from the fireplace. Select the new location. For the bottom location, install the 3-wire 120 Vac supply wire and strain relief in the hole provided. Connect the wires *(**Figure 29**)*. Reinstall the junction box by compressing the sides, then place the small flange of the Junction box in the small slot. Place the larger flange into the larger slot and release. Reinstall the cover over the original junction box location.

Figure 28 - Wiring Diagram—Electronic Gas Valves

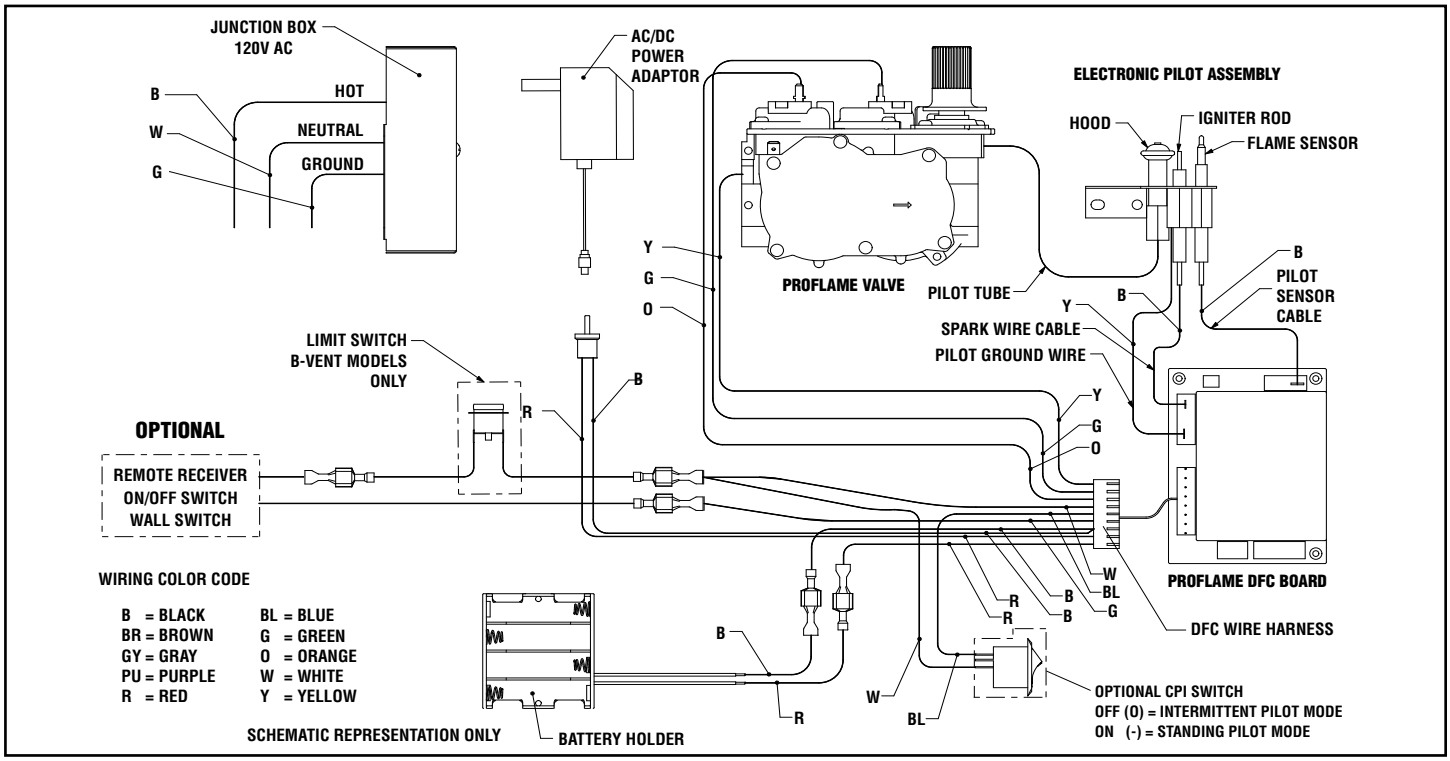

2. Remove the electrical inlet cover plate from the side of the unit by removing the plate securing screws.
3. Remove the cover plate knockout, then feed the power supply wire through the knockout opening and into the unit junction box.
4. Connect the black power supply wire to the power outlet red and black pigtail lead *(**Figures 28 and 29**)*. Connect the white power supply wire to the outlet common terminal.

Figure 29 - Junction Box Wiring, 120 V, 60 hz, 1 phase

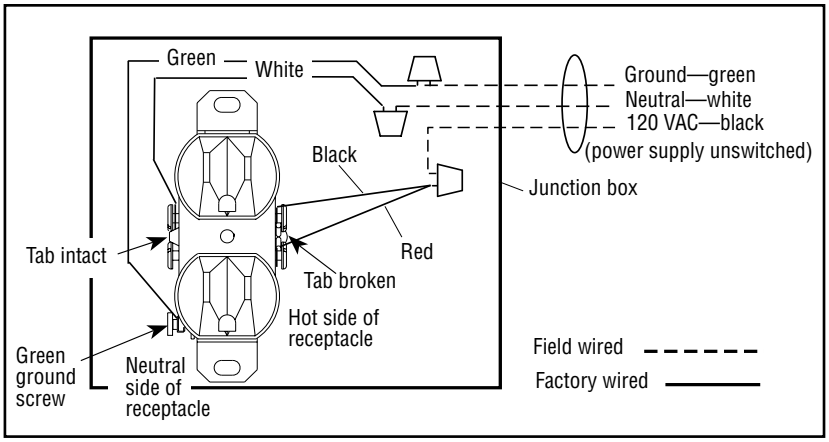

Figure 30 - Junction box locations

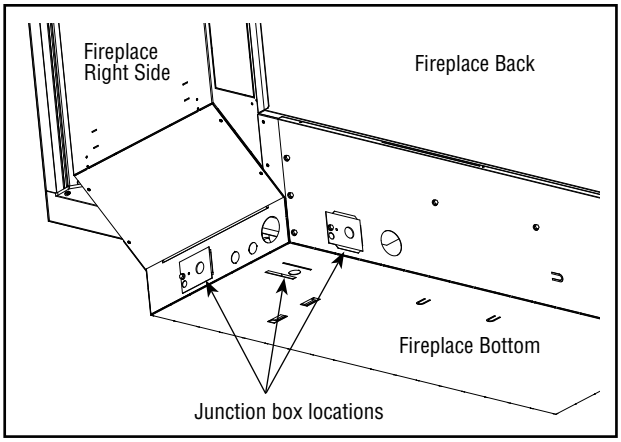

5. Connect the ground supply wire to the pigtail lead attached to the outlet's green ground screw. Restrain the inlet power lead per NEC or local codes.
6. After the wiring is complete, replace the cover plate.

NOTE: To control the optional blower, the tab on the hot side of the receptacle *(see **Figure 29**)* must be broken and the red lead must be wired to the variable speed control mounted in a wall box (not provided).

⚠ WARNING

Electronic models of these appliances are equipped with a three-prong (grounding) plug utilized in connecting the electronic components to the junction box in the lower compartment. This grounding plug provides protection against shock hazard and should be plugged directly into a properly grounded three-prong receptacle. DO NOT cut or remove the grounding prong from the plug.

Install the wiring for the wall switch receiver

Place the wall switch receiver in the OFF position during installation or maintenance. The remote control transmitter and wall switch receiver work via radio frequency. If the wall switch receiver is mounted in a metal case, severe loss of performance (reduction in operational range) may result. Turn OFF main gas supply to the fireplace during installation, maintenance, removal, or replacement of the wall switch receiver.

1. Install a junction box (not provided) on the wall adjacent to the appliance, within reach of the remote system umbilical cord wiring harness.
2. Position the 2-wire harness in the junction box (not included).

⚠ WARNING

Fire hazard. Can cause severe injury or death. The wall switch receiver causes ignition of the appliance. The appliance can turn on suddenly. Keep away from the appliance burner when operating the remote system or activating manual bypass of the remote control system.

⚠ WARNING

Property damage hazard. Excessive heat can cause property damage. The appliance can stay lit for many hours. Turn OFF the appliance if it is not going to be attended for any length of time. Always place the remote control transmitter where children cannot reach it.

Install batteries for battery backup

Batteries are only required to operate the unit in the event of loss of 120 VAC line power.

1. Remove the surround, if installed *(**Figure 41**)*.
2. Remove the glass door for easier access *(**Page 58**)*.
3. The battery holder is attached via cable to the CPI/IPI bracket on the left hand side *(**Figure 50**)*. Pull the cable until the battery holder is visible. Turn the battery holder such that it will clear the unit and can be removed from the unit (the black and red wires will still be connected to the unit).
4. Place the four (4) provided **AA** batteries into the holder. Align the (–) end of the batteries the the spring end of the holder.
5. Replace the battery holder and other removed components (if applicable) in reverse order.

9. Connect the Gas Line

The gas control valve is located in the lower control compartment *(**Figure 45**)*.

All codes require a shutoff valve mounted in the supply line. ***Figure 31*** illustrates the method for connecting the gas supply. The flex-line method is acceptable in the U.S., however, Canadian requirements vary depending on locality. Installation must be in compliance with local codes. The provided gas-line shutoff valve (located in the control compartment) is intended as a service shutoff. National and local codes may require installation of a second gas-line shutoff valve (not provided) in a readily accessible location. Consult local codes. It is the responsibility of the plumber to provide an accessible shutoff.

These fireplaces are equipped with a gas flex line for use (where permitted) in connecting the unit to the gas line. A gas flex line is provided to aid in attaching the direct-vent fireplace to the gas supply. The gas flex line can only be used where local codes permit. The flex line is rated for both natural and propane gas. A manual shutoff valve is also provided with the flex line. The gas line shutoff valve provided with the fireplace has a 1/2” NPT thread inlet port.

NOTE: Ensure the CPI/IPI switch is set to intermittent mode with the pilot in the OFF position. See control compartment label for more information.

NOTE: A sediment trap is recommended in the gas piping within the home to prevent moisture and debris in the line from damaging the valve.

NOTE: Secure all joints tightly using appropriate tools and sealing compounds. Ensure propane resistant compounds are used in propane applications.

NOTE: Seal around the gas line to prevent cold air leakage. Gas line holes and other openings can be caulked or stuffed with unfaced fiberglass insulation.

1. Unscrew the shutoff valve from the gas flex-line. Apply thread sealant appropriate for the gas type, and then connect the shutoff valve to the gas stub.

   NOTE: Position the shutoff valve to allow easy operation through the access opening in the fireplace floor.

2. Connect the flare fitting on the flex-line to the shutoff valve. Tighten by hand, and then use a pipe wrench to tighten completely, 1/4-turn at a time.

Figure 31 - Gas Line Connection

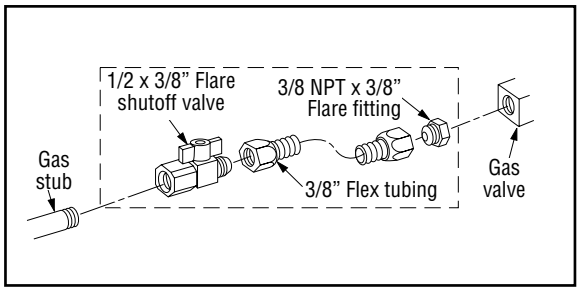

Figure 32 - Electronic Pilot

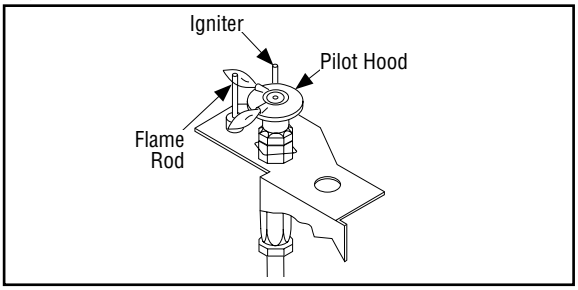

Access the Control Compartment

See ***Page 54*** for instructions on **Accessing the Control Compartment**.

The control valve has a 3/8" (10 mm) NPT thread inlet port. Secure all joints tightly using appropriate tools and sealing compounds (ensure propane resistant compounds are used in propane applications). Optionally, seal around the gas line to prevent cold air leakage. Gas line holes and other openings can be caulked or stuffed with unfaced fiberglass insulation.

All codes require a shutoff valve mounted in the supply line. The orientation of the shutoff valve should face the front. ***Figure 31*** illustrates two methods for connecting the gas supply. A sediment trap is recommended to prevent moisture and debris in the gas line from damaging the valve.

Test Factory and Field Connections for Gas Leaks

⚠ WARNING

Never use an open flame to check for leaks.

Turn on gas supply and test for gas leaks, using a gas leak test solution—also known as bubble leak solution.

NOTE: Using a soapy water solution is an effective leak test solution but it is not recommended, because the soap residue that is left on the pipes/fittings can result in corrosion over time.

1. Light the fireplace (refer to the lighting instructions label in the control compartment or ***Page 65***).
2. Brush all joints and connections with the gas leak test solution to check for leaks. If bubbles are formed, or gas odor is detected, turn the receiver or remote control to the OFF position. Either tighten or refasten the leaking connection, and then retest as described above.
3. When the gas lines are tested and leak free, rinse off the leak testing solution.

10. Verify Proper Fireplace Operation

1. With the gas line installed, inspect the system before closing the front of the unit.
2. Follow the pilot lighting instructions *(**Page 65**)*.

   NOTE: When lighting the fireplace for the first time, it will take a few minutes for the gas line to purge itself of air. When purged, the pilot and burner will light and operate as indicated. Subsequent lighting of the fireplace will not require purging.

3. To light the burner, turn ON the wall or remote control switch. Ensure the igniter lights the pilot. The pilot flame should engulf the flame rod *(**Figure 32**)*.

11. If necessary, Install the Firebox Floors

1. See ***Page 56*** for instructions on **Installing and Removing the Firebox Floors**.

   NOTE: The firebox floors are factory-installed.

12. If necessary, Install the Firebox Liners

1. See ***Page 56*** for instructions on **Installing the Firebox Liners**, if necessary.

   NOTE: The firebox liners are factory-installed.

13. Install the Glass Media

1. See ***Page 57*** for instructions on **Installing the Glass Media**.

14. Install the Baffle

NOTE: The baffle is factory-installed. Remove to install the vent restrictor *(**Page 20**)*.

1. With the baffle oriented as shown in ***Figure 33***, slide the rear tabs into the slots in the back panel.

Figure 33 - Baffle

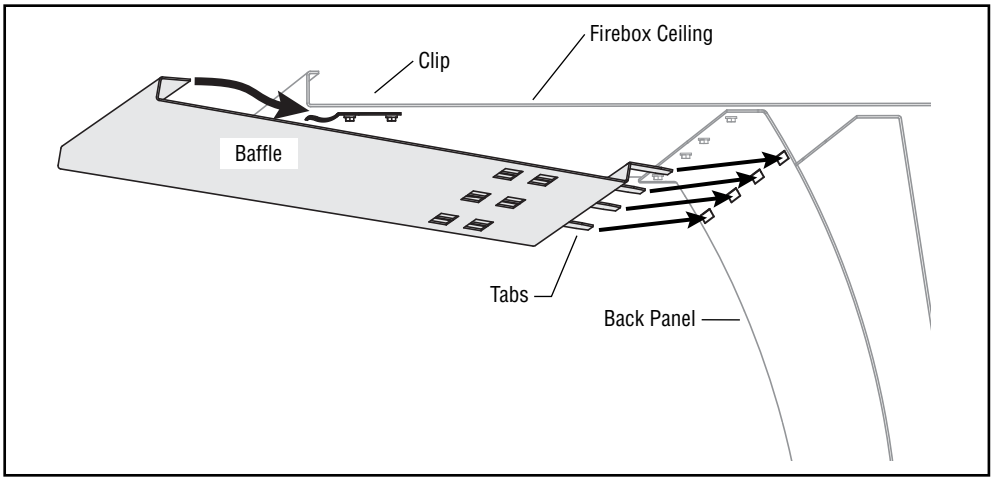

2. While sliding the tabs into the slots, slide the front lip of the baffle under the clips in the firebox ceiling.

15. Install the Glass Door

1. See ***Page 58*** for instructions on **Installing and removing the glass door**.

16. Adjust the Air Shutter to Ensure Proper Flame Appearance

⚠ WARNING

- **Air shutter adjustment should only be performed by a qualified professional service technician.**
- **Ensure glass door is in place and sealed during adjustment.**

⚠ CAUTION

- **Soot will be produced if the air shutter is closed too much. Any damage due to sooting, resulting from improperly setting the air shutter, is not covered under the warranty.**
- **The air shutter door and nearby appliance surfaces are hot. Exercise caution to avoid injury while adjusting flame appearance.**

Flame Appearance and Sooting

The flame should be blue at the base, and yellow-orange in the body of the flame.

When the fireplace is first lit, the entire flame may be blue and will gradually turn yellow-orange during the first 30 minutes of operation. If the flame remains blue, or if the flame is orange with evidence of sooting (black tip), the air shutter opening may need to be adjusted.

If the air shutter opening is closed too far, sooting may develop. Sooting is indicated by black puffs developing at the tips of very long orange flames. Sooting results in black deposits forming on the fireplace inside surfaces and on exterior surfaces adjacent to the vent termination.

Sooting is caused by incomplete combustion in the flames and lack of combustion air entering the air shutter opening. To achieve a warm yellow-orange flame with an orange body that does not soot, the shutter opening must be adjusted between these two extremes.

Air Shutter Adjustment Guidelines

- If there is smoke or soot present, first ensure that the flames are not impinging on any of the panels. If the panels are properly positioned and a sooting condition still exists, increase the air shutter opening.
- The more offsets in the vent system, the wider the air shutter will need to be opened.
- The length and configuration of the chimney vent will affect flame appearance.
- A fireplace operated with the air shutter opened too far may have flames that appear blue and transparent. These weak, blue, and transparent flames are termed anemic.
- Propane models may exhibit flames that candle or appear stringy. If this condition is present and persists, adjust the air shutter to a more open position, then operate the fireplace for a few more minutes to ensure that the flame normalizes and the flames do not appear sooty. The following chart is provided to help achieve the correct air shutter adjustment for your installation.

Table 25 - Air Shutter Adjustment Guidelines

Amount of Primary Air	Flame Color	Air Shutter Adjustment
If air shutter is closed too far →	Flame will be orange →	Air shutter gap should be increased: PULL lever toward front of fireplace
If air shutter is open too far →	Flame will be blue →	Air shutter gap should be decreased: PUSH lever toward back of fireplace

Figure 34 - Air Shutter Adjustment

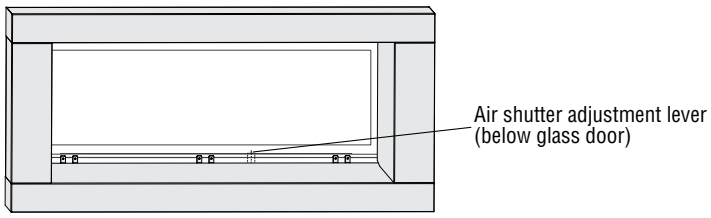

1. Move the adjustment lever *(**Figure 34**)* down to decrease air flow and up to increase it. Position the air shutter to the factory setting *(**Table 26**)*.
2. Light the fireplace. Follow the lighting procedure on the lighting label in the control compartment or ***Page 65***.
3. Allow the burner to operate for at least thirty (30) minutes while observing the flame continuously to ensure that the proper flame appearance is achieved *(**Figure 35**)*. If the following conditions are present, adjust accordingly.
   - If flame appears weak or sooty, adjust the air shutter, incrementally, to a more open position until the proper flame appearance is achieved.
   - If flame remains blue, adjust the air shutter, incrementally, to a more closed position until the proper flame appearance is achieved.
4. When satisfied that the burner flame appearance is normal, proceed to finish the installation.

Figure 35 - Flame Appearance

Table 26 - Main Burner Shutter Opening—Factory Setting

Models	Natural Gas	Propane
All	Closed	Closed

17. Install the Finishing Materials

NOTE: See **Cold Climate Insulation on *Page 11*** and **Vent Termination Clearances on *Page 13***.

1. Complete finished interior wall. Maintain a minimum 1” (26 mm) clearance from the door frame outer edge to any finish material.

   NOTE: NEVER install combustible material (wall finish, surround, trim, etc.) on, in front of, or overlapping any part of the fireplace front face.

   Figure 36 - Nailing flange attachment

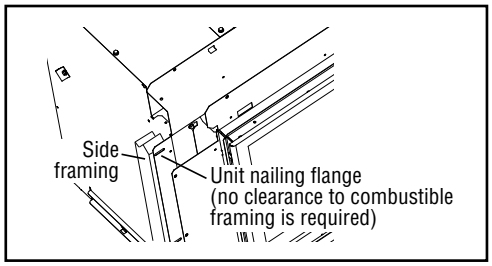

NOTE: See ***Page 18*** for finishing materials thinner than 1”.

Finishing without optional Surround—Cleanface Finish

1. Secure nailing flanges to wall framing.

   NOTE: The fireplace ships from factory with the flanges positioned for a cleanface installation.

2. Install non-combustible board at top of fireplace as follows *(see diagrams on **Page 42**)*:

   Remove the three (3) screws holding top of the clean face trim. Install the first top non-combustible board (with the 3 middle holes at the bottom and conter sink holes facing out) and reinstall the three (3) screws using the countersink holes in the board. Fasten the board to the side jack studs with one (1) screw on each side using the center holes in the board. Using 100% silicone applying the silicone with small “Hershey kisses” spaced out evenly on the first non-combustible board. Attach the second non-combustible board (with the 3 middle holes at the bottom and countersink holes facing out) to the first. Using the countersink holes in the board in the top left and right corners, shoot screws into the top jack stud header to hold the board in place. Install one (1) screw in the middle countersink hole into the top jack header.

   Remove the three (3) screws holding the sides of the clean face trim. Install both side pieces of non-combustible board. Using the countersink holes in the non-combustible board, reinstall the three (3) screws.

   NOTE: If skimming the non-combustible board to match drywall, use Sheetrock® brand Durabond® 90 setting type joint compound to fill all joints. These trademarks are owned by United States Gypsum Company or a related company. A total of 1” non-combustible material is required.

Framing Diagrams 1 through 7 *(see Instruction #2, **Page 41**)*:

3. Finish out wall with 1/2” finishing materials – paint with high-temperature paint, etc.
4. Install floor and media.
5. Reinstall door and barrier.

Figure 37 - Noncombustible Material with Cleanface Finish

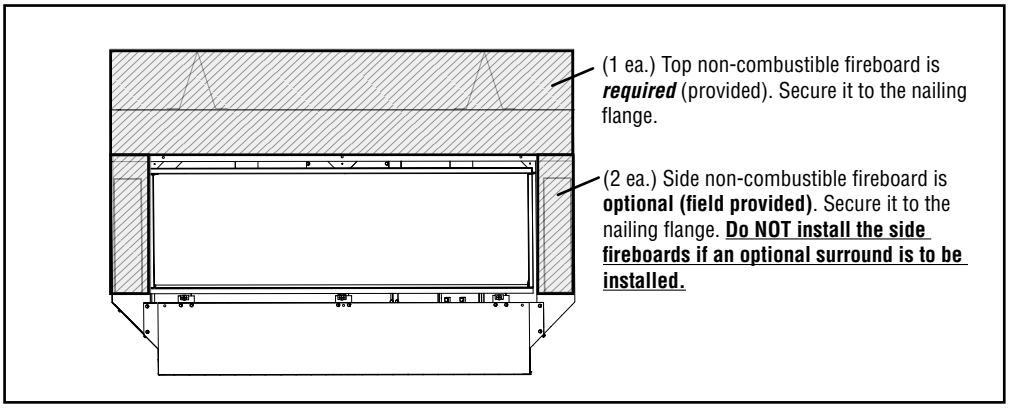

NOTE: The non-combustible fiberboard may be skim coated as a finish material, however, other types of non-combustible board may provide a more durable surface.

Figure 38 - Noncombustible Material with Cleanface Finish—Profile View

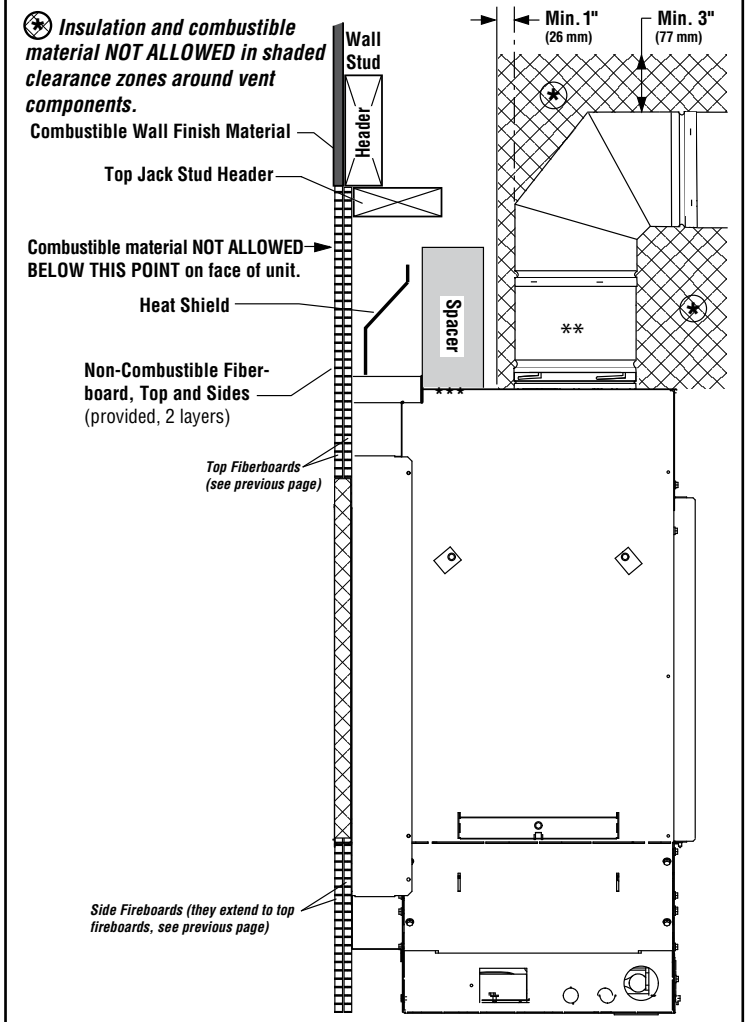

Figure 39 - Noncombustible Material with Surround—Profile View

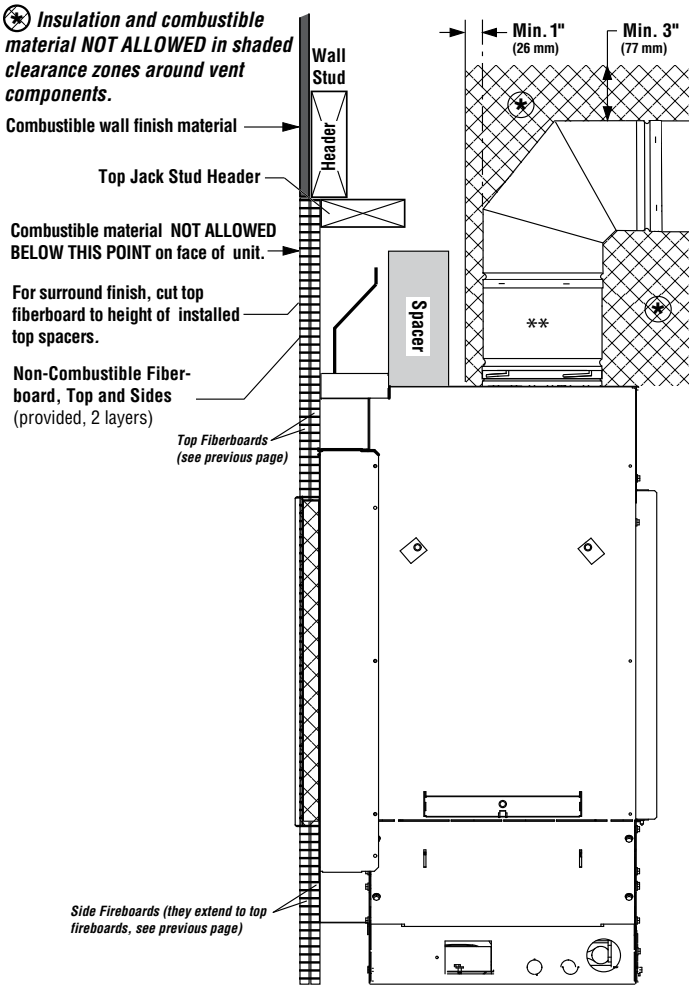

**** 6” straight vent section required before 90° elbow**
***** Ensure stand-off spacers are assembled per instructions on *Page 19* (step 2).**

Finishing with optional Surround

1. Remove clean-face frame *(**Figure 42**)*.
2. Installing the gas shut-off valve;
   - **a.** Pull gas flex line out from inside, beneath fireplace floor.
   - **b.** Place shut-off valve in valve bracket, threading flex line through gap in back.
   - **c.** Use coupler to attach additional flex line to shut-off valve.
   - **d.** Bend up tab on the side of valve bracket to hold shut-off valve in place *(**Figure 40**)*.
   - **e.** Attach valve bracket to unit with two screws.
   - **f.** Attach shut-off valve to incoming gas line with field-supplied coupler.
3. Place unit in wall framing.

   NOTE: The provided non-combustible fiberboard may be faced with any NON-combustible finish material appropriate for use (brick, tile, stone, high-temperature paint, etc.). For painted wall finish, use two (2) coats of quality primer and high-temperature paint on provided fiberboard.
4. Secure nailing flanges to wall framing.

   NOTE: If skimming the non-combustible board to match drywall, use Sheetrock® brand Durabond® 90 setting type joint compound to fill all joints. These trademarks are owned by United States Gypsum Company or a related company.
5. Cut noncombustible fireboard to size and install flush with top of frame pieces.
6. Finish out wall with 1/2” finishing materials – paint with high-temperature paint, etc. A total of 1” finish material is needed to be flush with the surround back.
7. Attach surround in frame using screws a minimum of six at specified locations *(**Figure 41**)*.
8. Install barrier mounting brackets on side of surround.
9. Reinstall door and secure with three screws.
10. Install Gas Shutoff Valve Door *(**Figure 41**)*.
11. Install barrier on barrier mounting brackets.

Figure 40 - Gas Shutoff Valve Bracket

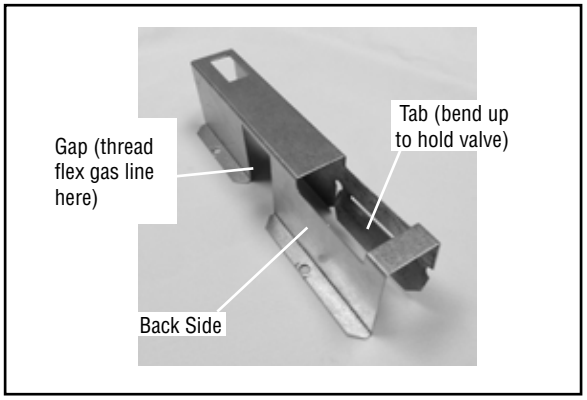

Figure 41 - Installing the Surround

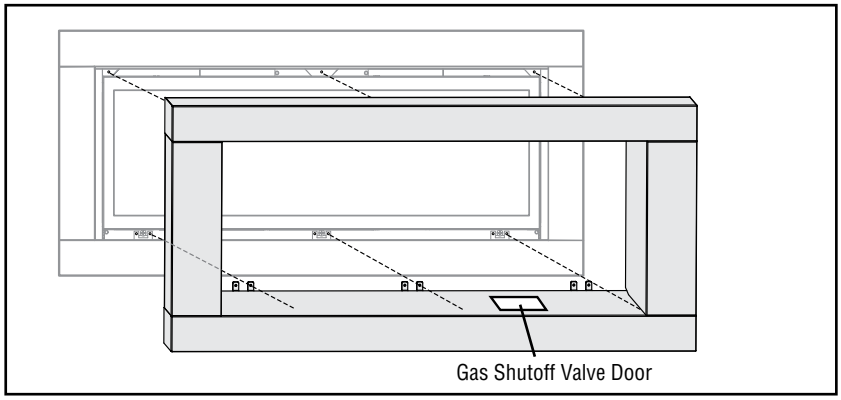

Figure 42 - Noncombustible Material with Bezel and Barrier

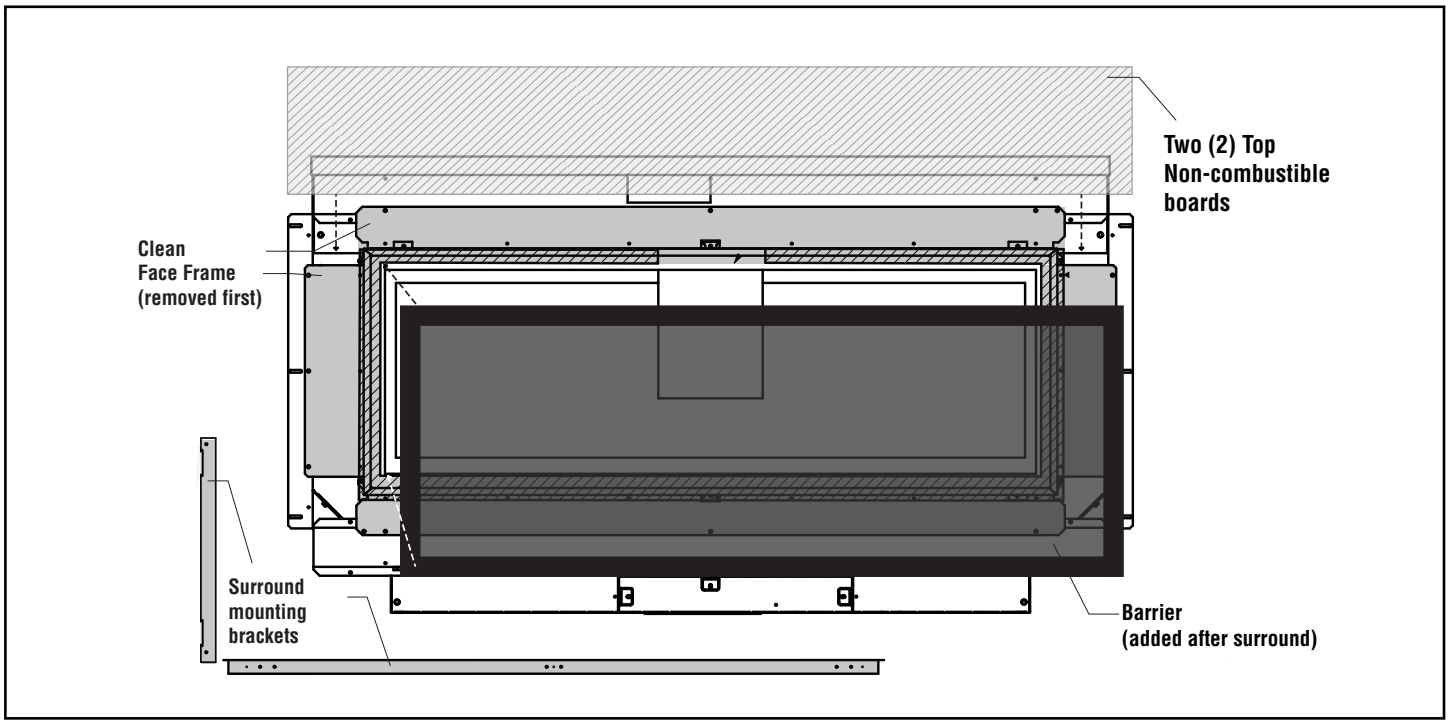

18. Install the Wall Switch Receiver

1. When wall finish is complete, install the wall switch receiver in the previously installed junction box, and connect the 2-wire terminal to the connector on the back of the receiver.
2. Install the receiver cover plate. Ensure the receiver switch is properly aligned with the switch cover

19. Initialize the Remote Control System

After completing the fireplace installation and before operating the fireplace, initialize the remote control system per the instructions provided in the kit.

1. Insert the 3-volt battery into the battery bay in the remote control *(**Figure 43**)*. Correctly align polarity (+/–).
2. Insert the (4) provided **AA** batteries into the receiver battery bay *(**Figure 43**)*. Correctly align polarity (+/–).

Figure 43 - Remote and Wall Receiver Battery Compartments

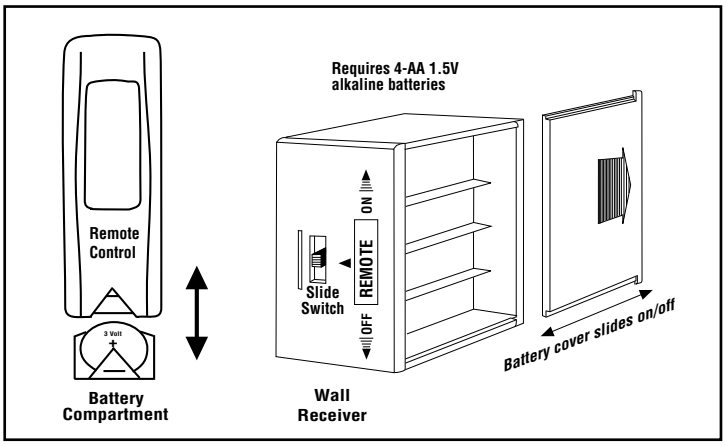

Figure 44 - Remote Control Transmitter

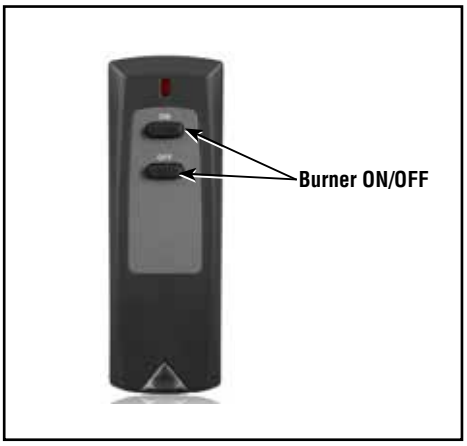

20. Attach the Safety-in-Operation Warning Labels

1. Attach the furnished safety instruction labels at all fireplace operation and control points *(**Page 46**)*.

NOTE: The installer MUST ensure these warnings are properly attached during installation. The warning labels are a critical means of informing consumers of safe operation practices.

INSTALLER - ATTACHING SAFETY-IN-OPERATION WARNINGS

It is the installers responsibility to ensure these warnings are properly affixed during installation. These warning labels are a critical step in informing consumers of safe operation of this appliance.

ATTACHING SAFETY IN OPERATION WARNINGS

It is required that the safety instruction labels furnished with the fireplace be affixed to the operation and control point of the fireplace. A safety instruction label must be affixed to the wall switch plate where the fireplace is turned on and off *(See **Figure A**)* or wall thermostat *(See **Figure B**)* and if used on the remote control handheld transmitter *(**Figure C**)*. To properly complete the installation of this fireplace, locate the multi-lingual adhesive labels provided with the Care and Operation Instructions and proceed as follows:

1. Locate the wall switch or wall thermostat that controls the fireplace (verify the switch operates the fireplace by turning it on and off). Clean the wall switch plate or wall thermostat thoroughly to remove any dust and oils. Affix the label to the surface of the plate of the wall switch that controls the fireplace *(**Figure A**)* or the wall thermostat *(**Figure B**)*. Choose the language primarily spoken in the home. If unknown, affix the English language label.
2. If a remote control is used to control the fireplace, locate the transmitter and clean it thoroughly to remove any dust and oils. Affix the label to the surface of handheld transmitter *(**Figure C**)*. Choose the language primarily spoken in the home. If unknown, affix the English language label.
3. If you are unable to locate the labels, please contact IHP or your nearest IHP dealer to receive additional safety instruction labels free of charge.

   Cat. No. H8024 Replacement Label Kit

   IHP
   SuperiorFireplaces.us.com

Note: English is red text on clear label. French and Spanish are white text on black label.

APPOSITION DES MISES EN GARDE RELATIVES À LA SÉCURITÉ D'UTILISATION

Il est impératif que les étiquettes de sécurité fournies avec le foyer soient collées à côté des dispositifs de contrôle du foyer. Une étiquette de sécurité doit être collée sur la plaque de l'interrupteur contrôlant l'allumage du foyer *(voir **Figure A**)* ou sur le thermostat mural *(voir **Figure B**)* et, le cas échéant, sur le boîtier de la télécommande *(**Figure C**)*. Pour achever l'installation correcte de ce foyer, procédez comme suit avec les étiquettes adhésives en langues étrangères fournies avec les instructions d'utilisation et d'entretien :

1. Repérez l'interrupteur ou le thermostat mural qui contrôle le foyer (vérifiez que l'interrupteur contrôle le fonctionnement du foyer en le faisant basculer de Marche à Arrêt, et vice-versa). Nettoyez soigneusement la plaque murale de l'interrupteur ou le thermostat mural pour éliminer la poussière et les traces de graisse ou d'huile. Collez l'étiquette sur la surface de la plaque de l'interrupteur mural qui contrôle le foyer *(**Figure A**)* ou du thermostat mural *(**Figure B**)*. Choisissez la langue qui est principalement parlée dans la résidence du propriétaire. En cas de doute, collez l'étiquette en anglais.
2. Si une télécommande est utilisée pour contrôler le foyer, nettoyez la soigneusement pour éliminer la poussière et les traces de graisse ou d'huile. Collez l'étiquette sur le boîtier de la télécommande *(**Figure C**)*. Choisissez la langue qui est principalement parlée dans la résidence du propriétaire. En cas de doute, collez l'étiquette en anglais.
3. Si vous ne parvenez pas à localiser les étiquettes, s'il vous plaît contactez IHP ou votre revendeur le plus proche pour recevoir IHP étiquettes d'instructions de sécurité supplémentaires gratuitement.

   Étiquettes de remplacement, n° cat. H8024

   IHP
   SuperiorFireplaces.us.com

Remarque : Le texte anglais est rouge sur un support transparent. Le texte français et espagnol est blanc sur un support noir.

COLOCACIÓN DE ADVERTENCIAS DE SEGURIDAD EN OPERACIÓN

Se requiere que las etiquetas de instrucciones de seguridad incluidas con la chimenea se coloquen en el punto de operación y control de la misma. Se debe colocar una etiqueta de instrucciones de seguridad en la placa del interruptor de pared desde el cual se enciende y se apaga la chimenea *(ver la **Figura A**)* o en el termostato de pared *(ver la **Figura B**)* y en el transmisor de control remoto *(**Figura C**)* si se usa. Para completar correctamente la instalación de esta chimenea, encuentre las etiquetas adhesivas multilingües incluidas con las instrucciones de cuidado y operación y haga lo siguiente:

1. Identifique el interruptor o el termostato de pared que controla la chimenea (verifique que el interruptor opera la chimenea encendiéndola y apagándola). Limpie bien la placa del interruptor o el termostato de pared para quitar el polvo y aceite. Pegue la etiqueta en la superficie de la placa del interruptor que controla la chimenea *(**Figura A**)* o en el termostato de pared *(**Figura B**)*. Seleccione el idioma que más se habla en la casa. Si no sabe cuál es, use la etiqueta en inglés.
2. Si se usa un control remoto para controlar la chimenea, encuentre el transmisor y límpielo bien para quitar el polvo y aceite. Pegue la etiqueta en la superficie del transmisor *(**Figura C**)*. Seleccione el idioma que más se habla en la casa. Si no sabe cuál es, use la etiqueta en inglés.
3. Si usted es incapaz de localizar las etiquetas, por favor póngase en contacto con IHP, o con su distribuidor más cercano IHP recibir instrucción etiquetas de seguridad adicionales sin costo.

   Juego de etiquetas de repuesto - Nº de cat. H8024

   IHP
   SuperiorFireplaces.us.com

Nota: La etiqueta en inglés es transparente con texto rojo. Las etiquetas en francés y español son negras con texto blanco.

SAFETY LABEL DIAGRAMS

DIAGRAMMES DES ÉTIQUETTES DE SÉCURITÉ

DIAGRAMAS DE ETIQUETAS DE SEGURIDAD

Illustrations are for example only. Your accessories may be different.

Les illustrations sont par exemple uniquement. Vos accessoires peuvent être différents.

Las ilustraciones son sólo ejemplos. Tu accesorios pueden ser diferentes.

Figure A
Figura A

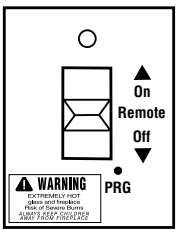

Figure B
Figura B

Figure C
Figura C

INSTALLATION ACCESSORIES

IMPORTANT NOTE: The installation accessories shown in this section are part of the safety agency listing for the product models represented in this manual.

Listed Secure Vent® Components

	Catalog Number	Model	Description
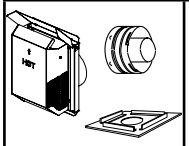	H1968	SV4.5HT-2	Horizontal Square Termination with Firestop/Spacer (H2246), and Adaptor (74L61)
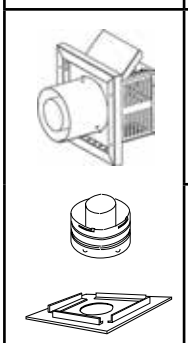	94L10	SV4.5HTSS	Rigid, Horizontal, Small Square Termination with Firestop/Spacer (H2246) and Adaptor (74L61) (see 750204M)
	H5817	SV4.5-20SSWSK	Rigid, Horizontal, Small Square Termination, with 20" Slip Section*, Wall Shield and Firestop (see 750247M & 750204M)
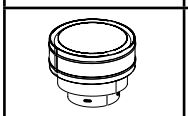	H2152	SV4.5CGV-1	Vertical Termination Cap, High Wind
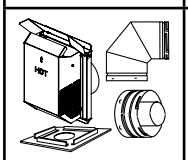	H8914	SV4.5TK90HT2	Horizontal Termination Kit HT-2 with 90° elbow
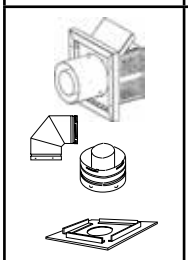	H8915	SV4.5TK90SS	Horizontal Termination Kit Small Square with 90° elbow
Vent Sections (Rigid)			
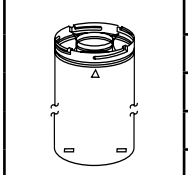	77L70	SV4.5L6	6" (152 mm)
	77L71	SV4.5L12	12" (305 mm)
	77L72	SV4.5L24	24" (610 mm)
	77L73	SV4.5L36	36" (914 mm)
	77L74	SV4.5L48	48" (1219 mm)
	77L75	SV4.5LA	Telescopic Length Slip Section (2–7-1/2" rigid)
	77L76	SV4.5E45	45° Elbow
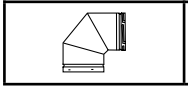	77L77	SV4.5E90	90° Elbow

	Catalog Number	Model	Description
The following flashing comes packaged with a storm collar			
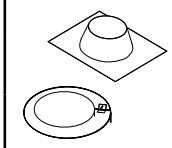	77L78	SV4.5F	Flat Roof Flashing
	77L79	SV4.5FA	1/12 to 7/12 Adjustable Flashing
	77L80	SV4.5FB	7/12 to 12/12 Adjustable Flashing
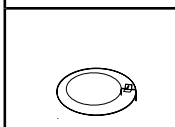	77L81	SV4.5SC6	Storm Collar (6 pack)
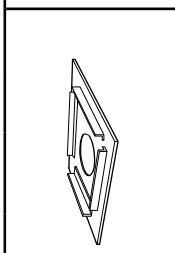	H6183	SV4.5HF5	Firestop Spacer, 5", rigid
	H6184	SF4.5HF5	Firestop Spacer, 5", flex
	H2246	SV4.5HF-10	Firestop/Spacer-Horizontal, rigid (3-1-1 spacing), 10 Pack
	H2247	SV4.5VF-10	Firestop/Spacer-Vertical, rigid (1-1-1 spacing), 10 Pack
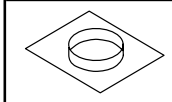	96K92	SV4.5SP	Support Plate
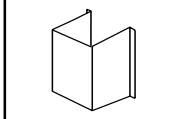	17M52	SV4.5HGS-1	Termination Guard, Square (1 pack) (see 750109M)
	17M53	SV4.5HGS-12	Termination Guard, Horizontal Square (12 pack) (see 750109M)
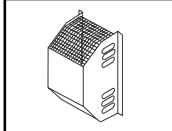	87L02	SV4.5HGS	Termination Guard for Horizontal Square Termination (Deluxe)(1 pack) (see 750055M)
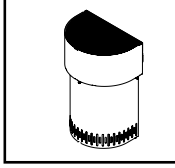	H5820	SV4.5HTSK	Termination Shroud (Guard) for Horizontal Square Termination (1 pack) (see 750246M)

** The 20" slip section can be field cut to desired size (new length must allow a minimum of 1-3/4" overlap within pipe). Deburr cut edges as necessary.*

Listed Secure Vent® Components

	Catalog Number	Model	Description
	H5816	SV4.5-TWSK10	Through Wall Shield Kit (to shield direct-vent pipe from blown insulation)(see 750247M)
	96K93	SV4.5SU	Support Strap
	99L02	SV4.5HRK14	Horizontal Riser Kit, 14"(see 750146M)
	99L03	SV4.5HRK36	Horizontal Riser Kit, 36" (see 750146M)

	Catalog Number	Model	Description
	H3907	SV4.5ARSA	Attic Insulation Shield with adjustable height, 12–22"
	10K81	SFMP	Mill-Pac, Black, High-Temperature Sealant

Listed Secure Flex® Components

	Catalog Number	Model	Description
These termination kits include firestop/spacer, gear clamps, and flex adaptor.			
	60L10	SF-18	18 ft (5.49 m)* compressed flex (see 750053M)
	98K03	SF-12	12 ft (3.66 m)*compressed flex (see 750052M)
	H2248	SF4.5HF-10	Firestop/Spacer, Horizontal, flex (3-1-1 spacing), 10 Pack
	H2249	SF4.5VF-10	Firestop/Spacer, Vertical, flex (1-1-1 spacing),10 Pack
	H1969	SF4.5HT-2	Horizontal Square Termination for flex (without flex)
	77L87	SFKIT12S	Square Term. for flex with 12" (305 mm)* compressed flex
	77L88	SFKIT18S	Square Term. for flex with 18" (457 mm)* compressed flex
	77L89	SFKIT24S	Square Term. for flex with 24" (610 mm)* compressed flex
	77L90	SFKIT36S	Square Term. for flex with 36" (914 mm)* compressed flex
	77L91	SFKIT48S	Square Term. for flex with 48" (1219 mm)* compressed flex
	91L66	SFGC4-6	Gear Clamp 4.5" (114 mm) for flex (6-pack)
	91L67	SFGC7-6	Gear Clamp 7.5" (191 mm) for flex (6 pack)
	F3191	SV4.5AdaptorKit	Secure Flex Adaptor Kit *Includes rigid to flex adaptor and flex to rigid adaptor (flex not included)*

	Catalog Number	Model	Description
	94L04 **	SFKIT12SS	Small Square Termination for flex, with 12" (305 mm) of *compressed flex vent (see 750204M)
	94L05 **	SFKIT18SS	Small Square Termination for flex, with 18" (457 mm) of *compressed flex vent (see 750204M)
	94L06 **	SFKIT24SS	Small Square Termination for flex, with 24" (610 mm) of *compressed flex vent (see 750204M)
	94L07 **	SFKIT36SS	Small Square Termination for flex, with 36" (914 mm) of *compressed flex vent (see 750204M)
	94L08 **	SFKIT48SS	Small Square Termination for flex, with 48" (1219 mm) of *compressed flex vent (see 750204M)
	94L09 **	SF-HTSS	Horizontal Small Square Termination for flex, without flex vent (see 750204M)
	56L74	SFVT30	Vertical Termination for flex (flat to 6/12) with flex adaptor, section of rigid vent, roof support collar assembly, roof flashing and storm collar. (see 750052M)
	56L75	SFVT45	Vertical Termination for flex (6/12 to 12/12) with flex adaptor, section of rigid vent, roof support collar assembly, roof flashing and storm collar. (see 750052M)
	H7748	FVK36	36" Flex Connector Kit. 36" of flex with two adaptors for mating two rigid sections of vent together.

* All compressed flex vents can be expanded up to two times.

** Small square termination is only approved for use with 42" models.

GAS CONVERSION KITS

⚠ WARNING

This conversion kit shall be installed by a qualified service agency in accordance with the manufacturer's instructions and all applicable codes and requirements of the authority having jurisdiction. If the information in these instructions is not followed exactly, a fire, explosion, or the production of carbon monoxide may result; causing property damage, personal injury, or loss of life. The qualified service agency is responsible for the proper installation of this kit. The installation is not proper and complete until the operation of the converted appliance is checked as specified in the manufacturer's instructions supplied with the kit. The qualified service agency performing this installation assumes responsibility for this conversion.

⚠ AVERTISSEMENT

Cette trousse de conversion doit être installée par un technicien agréé, selon les instructions du fabricant et selon toutes les exigences et tous les codes pertinents de l'autorité compétente. Assurez-vous de bien suivre les instructions dans cette notice pour réduire au minimum le risque d'incendie, d'explosion ou la production de monoxyde de carbone pouvant causer des dommages matériels, des blessures ou la mort. Le tecnicien agréé est responsable de l'installation de cette trousse. L'installation n'est pas adéquate ni complète tant que le bon fonctionnement de l'appareil converti n'a pas été vérifié selon les instructions du fabricant fournies avec la trousse. Le fournisseur de service qualifié ayant réalisé l'installation assume les responsabilités liées à la conversion.

In Canada:

The conversion shall be carried out in accordance with the requirements of the provincial authorities having jurisdiction and in accordance with the requirements of the CAN/CGA-B149.1 Installation code.

La conversion devra être effectuée conformément aux recommandations des autorités provinciales ayant juridiction et conformément aux exigences du code d'installation CAN/CGA-B149.1.

Gas conversion kits are available to adapt your fireplace from the use of one type of gas to the use of another. These kits contain all the necessary components needed to complete the task including labeling that must be affixed to ensure safe operation.

Refer to the instructions provided with the conversion kit when performing any gas conversion.

Table 30 - Electronic Systems, Natural Gas To Propane Gas Conversion Kits

Model Number	Model Number	Catalog Number
42"	GCK-LDV42NP	H8706
54"	GCK-LDV54NP	H8702

Table 31 - Electronic Systems, Propane Gas To Natural Gas Conversion Kits

Model Number	Model Number	Catalog Number
42"	GCK-LDV42PN	H8705
54"	GCK-LDV54PN	H8701

Installing Gas Conversion Kits

⚠ WARNING

The gas supply shall be shut OFF prior to disconnecting the electrical power, before proceeding with the conversion.

⚠ AVERTISSEMENT

Avant d'effecteur la conversion, coupez d'abord l'alimentation en gaz, ensuite, coupez l'alimentation electrique.

1. TURN OFF THE GAS SUPPLY TO THE FIREPLACE and disconnect power supply at the circuit breaker. Ensure fireplace is cold.
2. If installed, remove the surround *(**Figure 41**)*. Remove barrier.
3. Remove the glass door *(**Page 58**)*.
4. Remove the glass media *(**Page 61**)*.
5. Remove the front and rear floor sections *(**Page 56**)*.
6. Remove the two (2) screws securing the burner assembly. Remove the burner assembly with the attached venturi tube *(**Figure 45**)*.
7. Remove the control compartment access door and gasket *(**Figure 49**)*.

Figure 45 - Removing the Burner and Accessing the Control Compartment

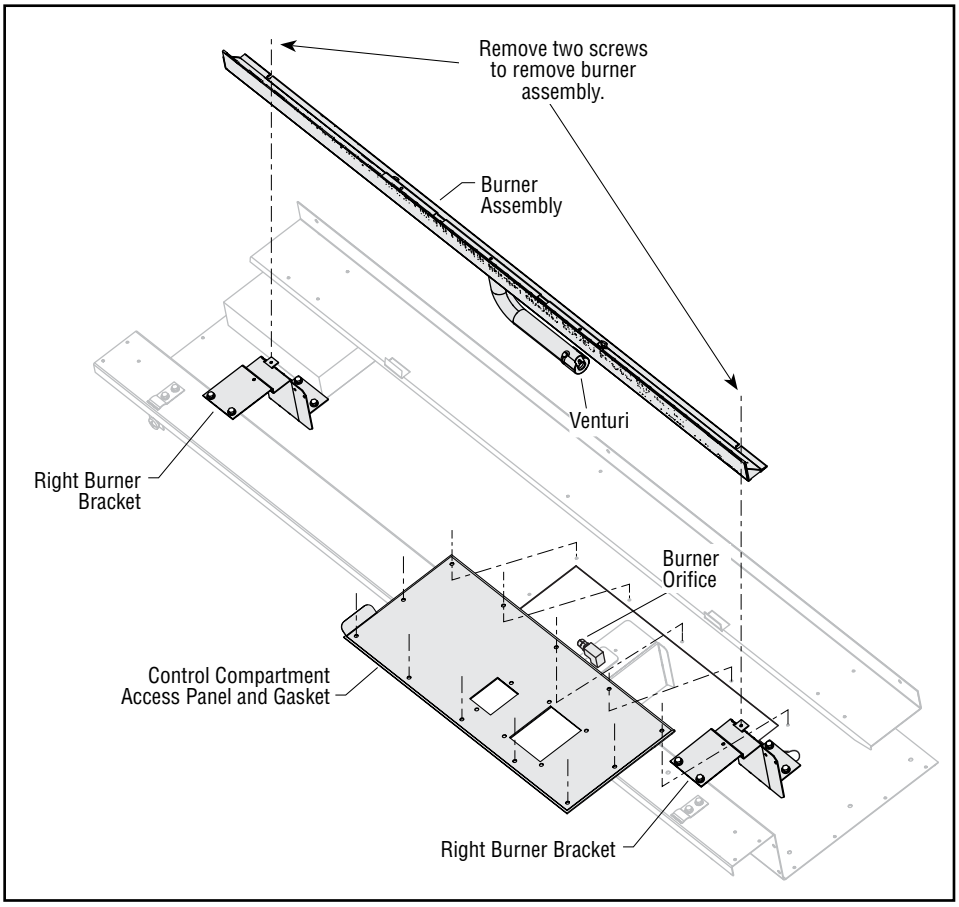

Figure 46 - Removing the Air Shutter Adjustment Rod

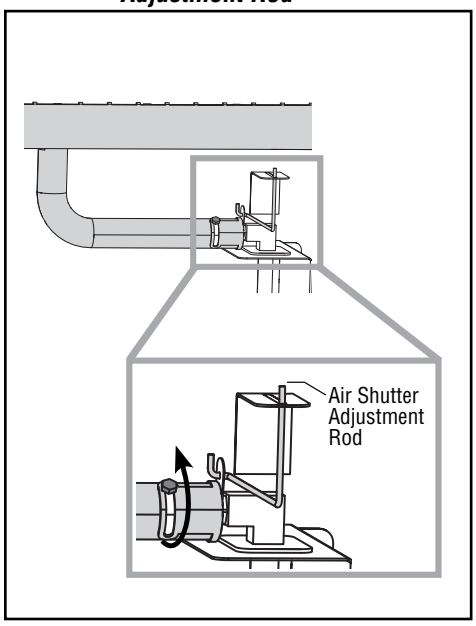

8. Refer to the instructions provided with the regulator conversion kit. Using a Torx T20 driver (with 1/4" shank) or slotted screwdriver, remove and discard the two (2) pressure regulator mounting screws, pressure regulator tower, the diaphragm assembly (if applicable) and the spring. Ensure the rubber gasket installed on the back of the replacement pressure regulator is properly positioned. Discard all removed components.
9. Install the new pressure regulator assembly using the supplied screws. Tighten the screws to 25 in. lbs.
10. Install the enclosed identification label to the valve body where it can be easily seen.

11. Make valve electrical connections.

12. Remove the pilot hood assembly to access the hex pilot orifice *(**Figure 47**)*. Remove and replace the pilot orifice with the one provided with the kit. Exercise extreme care to prevent damage to or breakage of the igniter assembly.

13. Remove the burner orifice from the manifold and replace it with the one provided in the kit *(**Figure 51**)*.

NOTE: See ***Table 5*** for burner orifice sizes.

Figure 47 - Pilot

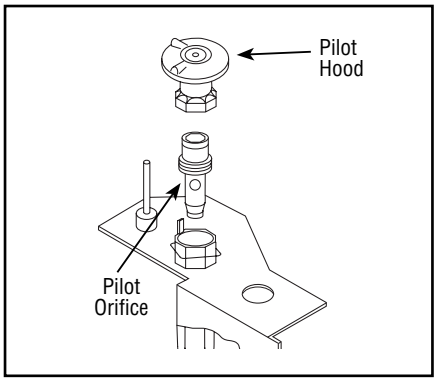

Figure 48 - Orifice

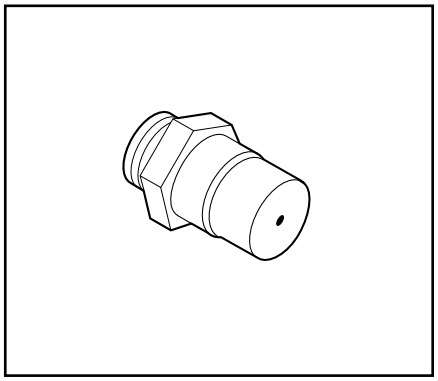

14. Apply pipe joint compound or Teflon® tape to all pipe fittings before installing.

NOTE: Ensure propane resistant compounds are used in propane applications, do not use pipe joint compounds on flare fittings.

15. Reinstall the control compartment access door and gasket. Secure using the twelve (12) screws removed previously (***Figure 45***).

16. Reinstall the air shutter adjustment lever.

17. Place the burner assembly into position. Replace the screws securing the burner to the burner brackets (***Figure 45***).

NOTE: Ensure the air shutter clears the pilot bracket.

18. Turn ON the gas supply to the fireplace and relight the appliance *(**Page 65**)*. With the main burner ON, use a gas leak test solution to test the new pressure regulator assembly and all gas line joints for leaks *(**Page 38**)*.

19. Attach the conversion information label to the rating plate.

20. Locate the valve test ports *(**Figure 1**)*. Using a manometer, test the inlet and manifold gas pressures *(**Table 3*** and ***Table 4**)*.

NOTE: Always test pressures with the valve regulator control at the highest setting.

21. Reinstall the media and glass door .

22. Relight the main burner and verify proper burner ignition and operation *(**Page 38**)*.

23. Inspect the pilot system for proper flame. The pilot flame should engulf the flame sensor *(**Figure 32**)*.

24. Turn OFF the gas supply to the fireplace.

25. Turn ON the gas supply to the fireplace. Use a gas leak test solution to test the NPT plugs for leaks.

26. Read **Flame Appearance and Sooting** and **Air Shutter Adjustment Guidelines** before proceeding. Before adjusting the air shutter, allow the burner to operate for at least thirty (30) minutes while continuously observing the flame.

27. Adjust the air shutter using the lever located just under the door, slightly right of center *(**Page 39**)*.

28. Reinstall barrier. Reinstall the surround.

OPERATION

⚠ WARNING

Young children should be carefully supervised when they are in the same room as the appliance. Toddlers, young children and others may be susceptible to accidental contact burns. A physical barrier is recommended if there are at risk individuals in the house. To restrict access to a fireplace or stove, install an adjustable safety gate to keep toddlers, young children and other at risk individuals out of the room and away from hot surfaces.

⚠ AVERTISSEMENT

Les jeunes enfants devraient être surveillés étroitement lorsqu'ils se trouvent dans la même pièce que l'appareil. Les tout petits, les jeunes enfants ou les adultes peuvent subir des brûlures s'ils viennent en contact avec la surface chaude. Il est recommandé d'installer une barrière physique si des personnes à risques habitent la maison. Pour empêcher l'accès à un foyer ou à un poêle, installez une barrière de sécurité; cette mesure empêchera les tout petits, les jeunes enfants et toute autre personne à risque d'avoir accès à la pièce et aux surfaces chaudes.

⚠ WARNING

Do not operate the fireplace if:

- **The glass front is removed, cracked, or broken**

CARBON MONOXIDE POISONING: Early signs of carbon monoxide poisoning are similar to the flu with headaches, dizziness and/or nausea. If you have these signs, obtain fresh air immediately. Turn off the gas supply to the appliance and have it serviced by a qualified professional, as it may not be operating correctly. Some people are more affected by carbon monoxide than others, including pregnant women, people with heart or lung disease or anemia, those under the influence of alcohol, and those at high altitudes.

NOTE: Do not place furniture or other combustible materials within 36" of the front of viewing area(s).

NOTE: Children and adults should be alerted to the hazards of high surface temperature and should stay away to avoid burns or clothing ignition.

Remarqué : Les enfants et les adultes devraient être infor-més des dangers que posent les températures de surface élevées et se tenir à distance afin d'éviter des brûlures ou que leurs vêtements ne s'enflamment.

NOTE: Installation and repair should be done by a qualified service person. The appliance should be inspected before use and at least annually by a professional service person. More frequent cleaning may be required due to excessive lint from carpeting, bedding material, et cetera. It is imperative that control compartments, burners and circulating air passageways of the appliance be kept clean.

Remarqué : L'installation et la réparation devrait être confiées à un technicien qualifié. L'appareil devrait faire l'objet d'une inspection par un technicien professionnel avant d'être utilisé et au moins une fois l'an par la suite. Des nettoyages plus fréquents peuvent être nécessaires si les tapis, la literie, et cetera produisent une quantité importante de pous-sière. Il est essentiel que les compartiments abritant les commandes, les brûleurs et les conduits de circulation d'air de l'appareil soient tenus propres.

NOTE: Do not use this appliance if any part has been under water. Immediately call a qualified service technician to inspect the appliance and to replace any part of the control system and any gas control which has been under water.

Remarqué : Ne pas utiliser cet appareil s'il a été plongé, même partiellement, dans l'eau. Appeler un technicien qualifié pour inspecter l'appareil et remplacer toute partie du système de commande et toute commande qui a été plongée dans l'eau.

HOMEOWNER'S INSTRUCTIONS - ATTACHING SAFETY IN OPERATION WARNINGS

ATTACHING SAFETY IN OPERATION WARNINGS

Your fireplace has been furnished with safety instruction labels that are to be affixed to the operation and control point of the fireplace. A safety instruction label should be affixed to the wall switch plate where the fireplace is turned on and off *(See **Figure A**)* or wall thermostat *(See **Figure B**)* and if used on the remote control handheld transmitter *(**Figure C**)*. The warnings should already have been put in place when the fireplace initial set-up was completed. If they are not affixed at these spots, locate the multi-lingual adhesive labels provided with these instructions and proceed as follows:

1. Locate the wall switch or wall thermostat that controls the fireplace (verify the switch operates the fireplace by turning it on and off). Clean the wall switch plate or wall thermostat thoroughly to remove any dust and oils. Affix the label to the surface of the plate of the wall switch that controls the fireplace *(**Figure A**)* or the wall thermostat *(**Figure B**)*. Choose the language primarily spoken in the home.
2. If a remote control is used to control the fireplace, locate the transmitter and clean it thoroughly to remove any dust and oils. Affix the label to the surface of handheld transmitter (*Figure C*). Choose the language primarily spoken in the home.
3. If you are unable to locate the labels, please contact IHP or your nearest IHP dealer to receive additional safety instruction labels free of charge.

   Cat. No. H8024 Replacement Label Kit

   IHP
   SuperiorFireplaces.us.com

Note: English is red text on clear label. French and Spanish are white text on black label.

APPOSITION DES MISES EN GARDE RELATIVES À LA SÉCURITÉ D'UTILISATION

Votre foyer a été livré avec des étiquettes de sécurité qui doivent être collées à côté des dispositifs de contrôle du foyer. Une étiquette de sécurité doit être collée sur la plaque de l'interrupteur contrôlant l'allumage du foyer *(voir **Figure A**)* ou sur le thermostat mural *(voir **Figure B**)* et, le cas échéant, sur le boîtier de la télécommande *(**Figure C**)*. Les mises en garde auraient dû être collées au moment de l'installation initiale du foyer. Si ce n'est pas le cas, prenez les étiquettes adhésives multilingues fournies avec ces instructions et procédez comme suit:

1. Repérez l'interrupteur ou le thermostat mural qui contrôle le foyer (vérifiez que l'interrupteur contrôle le fonctionnement du foyer en le faisant basculer de Marche à Arrêt, et vice-versa). Nettoyez soigneusement la plaque murale de l'interrupteur ou le thermostat mural pour éliminer la poussière et les traces de graisse ou d'huile. Collez l'étiquette sur la surface de la plaque de l'interrupteur mural qui contrôle le foyer *(**Figure A**)* ou du thermostat mural *(**Figure B**)*. Choisissez la langue qui est principalement parlée dans la résidence du propriétaire.
2. Si une télécommande est utilisée pour contrôler le foyer, nettoyez la soigneusement pour éliminer la poussière et les traces de graisse ou d'huile. Collez l'étiquette sur le boîtier de la télécommande *(**Figure C**)*. Choisissez la langue qui est principalement parlée dans la résidence du propriétaire.
3. Si vous ne parvenez pas à localiser les étiquettes, s'il vous plaît contactez IHP ou votre revendeur le plus proche pour recevoir IHP étiquettes d'instructions de sécurité supplémentaires gratuitement.

   Étiquettes de remplacement, n° cat. H8024

   IHP
   SuperiorFireplaces.us.com

Remarque : Le texte anglais est rouge sur un support transparent. Le texte français et espagnol est blanc sur un support noir.

COLOCACIÓN DE ADVERTENCIAS DE SEGURIDAD EN OPERACIÓN

Su chimenea incluye etiquetas de instrucciones de seguridad que deben colocarse en el punto de operación y control de la chimenea. Se debe colocar una etiqueta de instrucciones de seguridad en la placa del interruptor de pared desde el cual se enciende y se apaga la chimenea *(ver la **Figura A**)* o en el termostato de pared *(ver la **Figura B**)* y en el transmisor de control remoto *(**Figura C**)* si se usa. Las advertencias ya deben haberse colocado cuando se completó la instalación inicial de la chimenea. Si no están colocadas en estos lugares, encuentre las etiquetas adhesivas multilingües proporcionadas con estas instrucciones y prosiga de la siguiente manera:

1. Identifique el interruptor o el termostato de pared que controla la chimenea (verifique que el interruptor opera la chimenea encendiéndola y apagándola). Limpie bien la placa del interruptor o el termostato de pared para quitar el polvo y aceite. Pegue la etiqueta en la superficie de la placa del interruptor que controla la chimenea *(**Figura A**)* o en el termostato de pared *(**Figura B**)*. Seleccione el idioma que más se habla en la casa.
2. Si se usa un control remoto para controlar la chimenea, encuentre el transmisor y límpielo bien para quitar el polvo y aceite. Pegue la etiqueta en la superficie del transmisor *(**Figura C**)*. Seleccione el idioma que más se habla en la casa.
3. Si usted es incapaz de localizar las etiquetas, por favor póngase en contacto con IHP, o con su distribuidor más cercano IHP recibir instrucción etiquetas de seguridad adicionales sin costo.

   Juego de etiquetas de repuesto - Nº de cat. H8024

   IHP
   SuperiorFireplaces.us.com

Nota: La etiqueta en inglés es transparente con texto rojo. Las etiquetas en francés y español son negras con texto blanco.

SAFETY LABEL DIAGRAMS

DIAGRAMMES DES ÉTIQUETTES DE SÉCURITÉ

DIAGRAMAS DE ETIQUETAS DE SEGURIDAD

Illustrations are for example only. Your accessories may be different.

Les illustrations sont par exemple uniquement. Vos accessoires peuvent être différents.

Las ilustraciones son sólo ejemplos. Tu accesorios pueden ser diferentes.

Figure A

Figure B

Figure C

Burn-in Period

The first few times this fireplace is operated, there will be an odor from the curing of paint and the burning off of the lubricants used in the manufacturing process. Depending on usage, the burn-in period may take a few hours or a few days.

NOTE: Ventilate the site during the burn-in period. The resulting odor and haze may set off a smoke detector. Do not operate the optional blower, if installed, during the burn-in period.

A white film may develop on the glass front during the first few fires as part of the burn-in period. The glass should be kept clean during the burn-in period to prevent the film from baking on—making it very difficult to remove (**Cleaning the glass door and firebox on *Page 58).***

Accessing the Control Compartment

Access the control compartment ***(Figure 49)*** by removing the following components, as necessary, in this order:

1. Surround (optional) and barrier ***(Figure 41)***
2. Glass door ***(Page 58)***
3. Floor components ***(Page 56)***
4. Burner
   a. Remove the two (2) 5/16” screws securing the burner to the burner brackets.
   b. Carefully slide the burner to the left, to clear the venturi from the orifice.
   c. Rotate the burner to release the air shutter adjustment rod from the air shutter lever.
   d. Set aside screws and burner assembly in a secure location for later reinstallation.
5. Control compartment access panel
   a. Remove the control compartment access panel and gasket by removing the twelve (12) screws, and set aside for later reinstallation.
   b. The gas valve can be accessed through the opening, or the complete assembly can be removed by sliding the assembly to the right.

Figure 49 - Accessing the control compartment

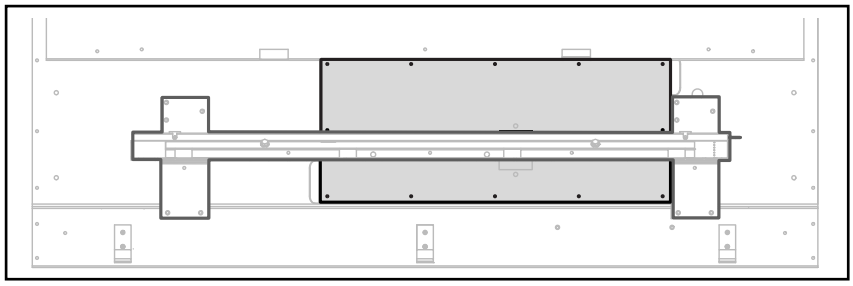

Closing the Control Compartment

Reinstall the items removed in **Accessing the Control Compartment**, in reverse order.

Gas Controls

Shutoff Valves

As part of your fireplace installation, the installer may have provided a readily accessible gas shutoff valve near your fireplace. Make sure this valve is fully open before operating the fireplace. If gas is not flowing to the pilot and burner, the service shutoff valve located in the fireplace control compartment may need to be opened. Contact your dealer or distributor for more information.

To access the service shutoff valve, remove the glass door, burner, floor panels, and control compartment access panel in the fireplace floor. In units with the surround installed, the gas shut off valve is locate below the access door in the surround.

Remote Control System

The remote control system provides remote operation of the following fireplace functions:

- Primary burner ON/OFF

The wall switch receiver accepts commands via radio frequency from the remote control transmitter and does not require line-of-sight operation. The slider switch on the receiver can be set to one of three positions:

- ON (manual override)
- OFF (manual override)
- REMOTE (remote control)

Detailed lighting instructions are found on ***Pages 65-66***. Also, electronic fireplace lighting instructions are attached to the CPI/IPI switch bracket.

The fireplace main burner can be turned ON/OFF with the wall switch or remote control. Check the batteries, at least every three (3) months to ensure they are properly charged *(**Figure 2, Page 10**)*.

To light the fireplace in a power outage:

1. Confirm that batteries are installed in the battery pack.
2. Set the unit-mounted switch, or wall switch to the ON Position.
3. The unit should spark at the pilot and light.

   NOTE: If there is no spark, replace the batteries.
4. Operate the fireplace normally.

NOTE: Install new batteries (4 **AA**) in the battery holder before the burn season. Then, the fireplace can automatically switch to battery power in the event of a power outage.

⚠ WARNING

Fire hazard. Can cause severe injury or death. The wall switch receiver causes ignition of the appliance. The appliance can turn on suddenly. Keep away from the appliance burner when operating the remote system or activating manual bypass of the remote control system.

⚠ WARNING

Property damage hazard. Excessive heat can cause property damage. The appliance can stay lit for many hours. Turn OFF the appliance if it is not going to be attended for any length of time. Always place the remote control transmitter where children cannot reach it.

Wall Switch Receiver Low Battery Power Detection

Battery life depends on several factors, including battery quality and number of fireplace ignitions. When the batteries are low or depleted, the fireplace can only be operated manually (ON/OFF). When the depleted batteries are replaced, the receiver will resume normal operation.

Remote Control Transmitter Low Battery Power Detection

When the transmitter batteries are low, replace the depleted batteries. The transmitter will resume normal operation. Battery life depends on several factors, including battery quality and number of fireplace ignitions. When the batteries are low or depleted, the fireplace can only be operated manually (ON/OFF).

1. Replace the 3V Button Cell battery in the handheld remote control.

Remotely Turning ON the Appliance

1. Slide the wall switch to the REMOTE position *(**Figure 43**)*.
2. Press the remote control ON/OFF key *(**Figure 44**)*.
3. A signal light on the remote will illuminate briefly to confirm receipt of the command, and the burner will light.

Remotely Turning OFF the Appliance

1. Press the remote control ON/OFF key *(**Figure 44**)*.
2. A signal light on the remote will illuminate briefly to confirm receipt of the command, and the burner will turn OFF.

***IMPORTANT NOTE**: It is suggested that the slide switch be placed in the off position if you will be away from your home for an extended period of time. Placing the slide switch in the OFF position also functions as a safety "lock-out" by both turning the system OFF and rendering the remote receiver inoperative.*

Continuous Pilot Ignition / Intermittent Pilot Ignition Switch

These fireplaces have a continuous pilot ignition (CPI) / intermittent pilot ignition (IPI) switch installed under the door. This switch allows the pilot to be switched from intermittent mode to continuous mode:

- Intermittent Mode—The pilot is extinguished when the fireplace is OFF.
- Continuous Mode—The pilot stays ON when the fireplace is OFF.

In periods of extreme cold, condensation may form on the glass door when the fireplace is OFF and the pilot is in intermittent mode. Also, with the pilot in intermittent mode, the fireplace may cycle startup (i.e., the pilot and burner ignite, but the burner extinguishes and reignites several times until the flue reaches the temperature for proper drafting).

- To save energy—switch to intermittent mode.
- For a standing pilot that will help prevent glass door condensation and cycle startup—switch to continuous mode.

NOTE: Continuous mode is indicated by a pilot that comes ON and remains lit when the fireplace is OFF.

Figure 50 - Control Compartment

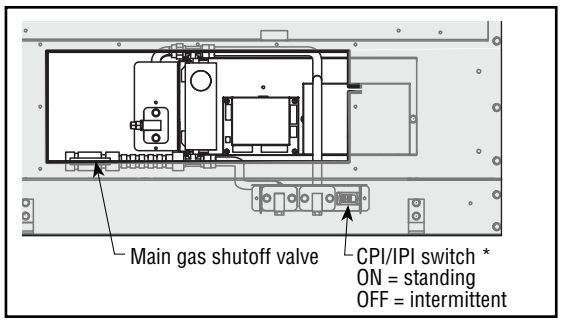

Installing the Firebox Liners

NOTE: It is not necessary to remove the firebox liner panels for most maintenance situations.

⚠ WARNING

- **Do NOT attempt to install firebox liner panels until the fireplace is installed, the gas-line has been connected and tested for leaks, and initial burner operation has been confirmed.**

Install the side panels

1. Align screw hole in top flange of side panel with upper hole in inside wall of fireplace.
2. Align screw holes in bottom flanges of side panel with holes in front ledge and rear ledge.
3. Secure each panel with three (3) screws.

Install back panel

1. Insert bottom edge of back panel into fireplace. Lift it over the tabs on rear ledge of fireplace.
2. Align screw holes in top and bottom edges of back panel with holes in fireplace ceiling and rear ledge. Secure using seven (7) screws.

Installing the Glass Media

⚠ WARNING

- **The glass media was designed to provide a safe, reliable, attractive flame. Any attempt to use media not specified for this fireplace will result in incomplete combustion, sooting, poor flame quality, and will void the warranty.**
- **Glass media gets very HOT during fireplace use and will remain hot up to ONE HOUR after gas supply is turned off. HANDLE MEDIA ONLY WHEN COOL. Turn OFF all electricity to the appliance before installing media.**
- **If glass media is not installed according to the installation instructions, flame impingement and improper combustion could occur, resulting in soot and/or excessive production of carbon monoxide (CO), a TOXIC gas that is colorless and odorless.**
- **This appliance is NOT designed to burn wood. Any attempt to burn wood in this fireplace may be a safety hazard, cause irreparable damage the appliance, and void the warranty.**

1. Install the glass media in the recessed area between the front and rear floors.

   NOTE: 42” fireplaces require a full bag of glass media. 54” fireplaces require two (2) full bags of media.
2. Spread the glass media in a thin layer, evenly around the burner *(**Figure 51**)*. Do NOT mound the media.

Figure 51 - Installing the glass media

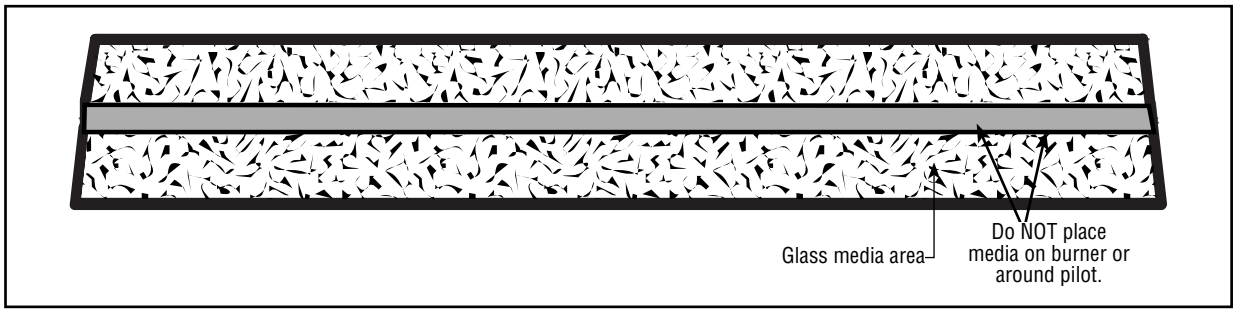

NOTE: *It is important to ensure proper media placement per the manual when installing these units. Verify pilot flame is not obstructed. Ensure media does not fall through the pilot hole in the floor. See Verifying Appliance Operation on* ***Page 38****.*

Installing and removing the glass door

⚠ WARNING

HOT GLASS WILL CAUSE BURNS. DO NOT TOUCH GLASS UNTIL COOLED.

- **Remove glass door only when fireplace is OFF and COLD.**
- **Fireplace surfaces get EXTREMELY HOT!**
- **The glass on the front of the fireplace reaches EXTREMELY HIGH temperatures and can cause severe burns if touched. Even after the gas is turned off, fireplace surfaces remain extremely hot.**

⚠ WARNING

- **Do not attempt to substitute the materials used on these doors, or replace cracked or broken glass.**
- **Handle this glass with extreme care! Glass is susceptible to damage—Do not scratch or handle roughly while reinstalling the glass door frame.**
- **The glass door of this appliance must only be replaced as a complete unit as provided by the manufacturer. Do not attempt to replace broken, cracked or chipped glass separately.**
- **Do not attempt to touch the front enclosure glass with your hands while the fireplace is in use.**

⚠ WARNING

Do not operate appliance with the glass front removed, cracked, or broken.

⚠ AVERTISSEMENT

Ne pas utiliser l'appareil si le panneau frontal en verre n'est pas en place, est craqué, ou brisé.

⚠ WARNING

Any safety screen, guard, or barrier removed for servicing an appliance must be replaced prior to operating the appliance.

⚠ AVERTISSEMENT

Tout écran ou protecteur retiré pour permettre l'entretien de l'appareil doit être remis en place avant de mettre l'appareil en marche.

⚠ WARNING

Do NOT abuse the glass door by striking it or slamming it shut.

⚠ WARNING

The door should easily close without needing to be pressed down. If it has to be pressed down to close, the gasket in the top of the door should be dressed so it lays on the glass.

Only doors certified with the fireplace shall be used.
Seules des portes certifiées pour cet appareil doivent être utilisées.

Installing the glass door

1. Visually inspect the gasket on the backside of the glass door.

   NOTE: The gasket surface must be clean, free of irregularities, and seated firmly. Ensure it is properly located. Make sure the bead is not rolled into the channel at the top of the door, but remains flat against the top of the glass.

2. While holding the glass door by the sides, hook the top edge onto the fireplace, and swing the bottom of the glass door gently in towards the fireplace ensuring that the gasket seats evenly as the door draws shut.

   NOTE: If the lower flange of the door does NOT clear the lower front frame of the fireplace, ensure the door UPPER mounting flange is completely and properly engaged on the fireplace frame BEFORE INSERTING THE SCREWS. Proper door alignment and sealing are important to the operation and performance of the fireplace. Ensure the door seal is contacting the frame and that no air leaks are present.

3. Align the screw holes below the glass door with the holes in the fireplace, and secure using the three (3) provided screws *(**Figure 52**)*.
4. For cleanface installations, install the modesty panel.
5. Install barrier.

Removing the glass door

1. Remove barrier.
1. For cleanface installations, remove the modesty panel.
2. Remove the three (3) screws beneath the door *(**Figure 52**)*.
3. Swing the bottom of the glass door away from the fireplace to a 45° angle.
4. Carefully grip the door at the top and bottom, and remove it from the fireplace. Place the door in a safe location for later reinstallation.

Figure 52 - Glass Door

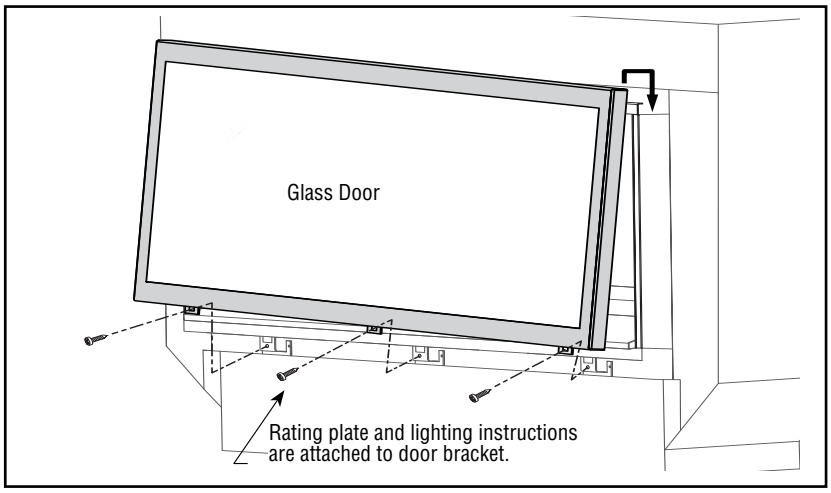

NOTICE: All DRL3000 model fireplaces include a barrier to reduce the risk of burns from hot viewing glass. This barrier in the fireplace is a screen shown to the right.

42” Barrier J7427
54” Barrier J7426

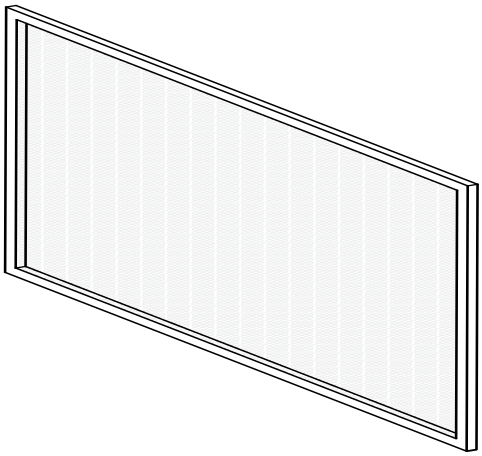

MAINTENANCE

Refer to the **Maintenance Schedule** on ***Page 62*** for maintenance tasks, procedures, frequency, and a listing of by whom the tasks should be performed. Always verify proper fireplace operation after servicing.

⚠ WARNING

Turn OFF gas and electrical power to the fireplace and allow it to cool before cleaning or servicing the appliance.

⚠ CAUTION

Wear gloves and safety glasses for protection while doing required maintenance.

Verify proper operation after servicing.

S'assurer que l'appareil fonctionne adéquatement une fois l'entretien terminé.

Always turn OFF gas before cleaning. Before relighting, refer to the lighting instructions in this manual. Instructions are also found on a pull-out panel located in the control compartment.

Always keep the appliance area clear and free from combustible materials, gasoline and other flammable liquids.

NOTE: Prior to the first use of the fireplace and each burn season and periodically during the burn season, inspect the horizontal termination for debris such as bird nests, leaves, paper or branches. Remove any items from the surfaces of the termination prior to use. Also be aware of shrubs and plantings that may encroach on the termination.

Inspecting the venting system

The fireplace and venting system should be thoroughly inspected before initial use and at least annually by a qualified service technician. Inspection should include ensuring that exhaust or intake passages are unobstructed and vent components are properly assembled and not damaged.

The homeowner must contact a qualified service technician at once if any abnormal condition is observed.

If the venting system is disassembled for any reason, a qualified service technician should follow vent installation instructions for proper reassembly and proper sealing of the venting system components. However, more frequent periodic inspections and cleanings should be performed by the homeowner.

NOTE: Prior to the first use of the fireplace and each burn season and periodically during the burn season, inspect the horizontal termination for debris such as bird nests, leaves, paper or branches. Remove any items from the surfaces of the termination prior to use. Also be aware of shrubs and plantings that may encroach on the termination.

Inspecting the burner flame appearance

Periodically inspect the burner and pilot flame. Ensure that the burner flame appearance resembles the flame shown in ***Figure 35*** on ***Page 40*** and as described in **Flame Appearance and Sooting on *Page 39***. Any necessary burner flame adjustments must be performed by qualified personnel only (***Page 39***). Refer to ***Page 38*** for more information about the pilot flame appearance. Contact a qualified service technician at once if any abnormal condition is observed.

Cleaning the glass door and firebox

⚠ WARNING

Do not use abrasive cleaners on glass. Never clean the glass when it is hot.

Clean the glass and firebox during the **Burn-in Period**, and then only when necessary and when the fireplace is cool. Wipe the surface with a clean, dampened, soft cloth. Follow with a dry, soft towel as desired. Take care not to scratch the surface. Periodically, remove any build-up caused by the following:

- During start-up, it is normal for condensation to form on the inside of the glass (this condensation and fog will usually disappear in a few minutes). The moisture can cause lint, dust and other airborne particles to cling to the glass surface.
- Initial curing of the high temperature paint and burning off of lubricants used in the manufacturing process may result in a film on the glass.
- A white coating may form on the glass as a result of impurities and minerals in the fuel.

Clean the glass two or three times each heating season, depending on the circumstances present. The following cleaning solutions are approved for use:

- Non-ammonia based glass cleaner
- 50/50 mixture of white vinegar / water
- Gas fireplace/stove glass cleaner

Inspecting the glass gasket

Visually inspect the gasket on the backside of the glass door. The gasket surface must be clean, free of irregularities, and seated firmly.

Cleaning the control compartment

Keep the control compartment clean by vacuuming or brushing it out at least twice a year. More frequent cleaning may be required due to excessive lint from carpeting, bedding material, etcetera. It is imperative that control compartments, burners and circulating air passageways of the appliance be kept clean.

Touching up paint in small areas

Only use an approved paint kit for any touch-ups. Paint is available at your local IHP dealer. Never attempt to paint a hot fireplace. Do not attempt to repaint the fireplace until the finish is completely cured (**Burn-in Period on *Page 54)***. If the surface becomes stained or marred, it may be lightly sanded and touched up.

Glass Media

Removing and cleaning the glass media

⚠ CAUTION

Risk of personal injury. Allow the media to completely cool before handling.

Use a clean, dry, empty shop vac to remove glass media. Wash the media in warm, soapy water. Rinse and dry before reinstalling.

Reinstalling the glass media

Carefully follow the placement instructions *(**Page 56**)*. This will ensure a proper flame and safe combustion.

NOTE: Improper positioning of media can create carbon build-up and will alter the performance of the fireplace.

Replacing the media

If the media needs replacement, use only the proper replacement media from manufacturer *(**Page 63**)*.

Cleaning the burner

Carefully remove the media. Vacuum out any foreign matter on the burner (e.g., lint, carbon, etc.). Ensure the burner ports are free of debris.

NOTE: Improper positioning of media can create carbon build-up and will alter the performance of the fireplace.

NOTE: It is important to ensure proper glass media placement per the manual when installing these units.. Verify pilot flame is not obstructed. Ensure media does not fall through the pilot hole in the floor. See Verifying Appliance Operation on ***Page 38***.

Inspecting the wiring

Refer to the wiring diagram *(**Figure 28**)*.

⚠ CAUTION

When servicing controls, label all wires prior to disconnection. Wiring errors can cause improper and dangerous operation. Verify proper operation after servicing.

⚠ ATTENTION

Au moment de l'entretien des commandes, étiquetez tous les fils avant de les débrancher. Des erreurs de câblage peuvent entraîner un fonctionnement inadéquat et dangereux.

Inspect and clean all wire connections. Ensure that there is no wire melting or damage. The inspection should include:

- Terminals at the valve
- ON/OFF switch

MAINTENANCE SCHEDULE

See the tables below for detailed information about required maintenance, both regular and annual.

Maintenance Performed Annually—Before the Burning Season

Maintenance Task	Performed By	Procedure
Inspecting/Cleaning Burner, Panels, and Controls	Qualified Service Technician	Inspect valve and ensure it is properly operating. Check piping for leaks. Vacuum the control compartment and burner area.
Checking Flame Patterns and Flame Height	Qualified Service Technician	Verify the flame pattern and height displayed by the fireplace *(**Figure 35**)*. Flames must not touch the or fireplace walls or ceiling.
Inspecting/Cleaning Pilot and Burner	Qualified Service Technician	Remove any surface build-up on pilot and burner assembly. Wipe the pilot nozzles, igniter/flame rod and hood. Ensure the pilot flame engulfs the flame sensor.
Checking Vent System	Qualified Service Technician	Remove baffle, inspect the vent system at the top and at the base (within the firebox) for signs of blockage or obstruction. Look for any signs of dislocation of the vent components.
Fireplace Inspection	Qualified Service Technician	Perform the appropriate fireplace inspection procedure detailed in this manual *(**Page 38**)*.
Replacing Batteries	Homeowner/Qualified Services Technician	For electronic gas valve models: Replace the batteries in the battery holder.

Maintenance Performed Periodically—After the Burning Season

Maintenance Task	Performed By	Procedure
Cleaning Firebox Interior	Homeowner	Carefully remove glass media *(**Page 61**)*. Vacuum out interior of the firebox. Clean firebox walls. Replace removed items as detailed in this manual.
Check Flame Patterns and Flame Height	Homeowner	Verify the flame pattern and height displayed by the fireplace *(**Figure 35**)*.
Checking Vent System	Homeowner	Inspect the vent system at the top and at the base (within the firebox) for signs of blockage or obstruction. Look for any signs of dislocation of the vent components.
Cleaning Glass Door	Homeowner	Clean as necessary following the directions provided in this manual *(**Page 60**)*. Do not touch or attempt to clean the glass while hot.

OPTIONAL ACCESSORY COMPONENTS

Surround Kits

Surround kits should be used for a finished appearance.

Catalog No.	Model No.	Description
F2261	LDV42-SB	Black Satin, 42” models
F2263	LDV42-SS	Stainless Steel, 42” models
F2260	LDV54-SB	Black Satin, 54” models
F2262	LDV54-SS	Stainless Steel, 54” models

Forced Air Kits

The FBK-100 blower is single speed. The FBK-200 blower has a variable speed control switch that must be wall mounted.

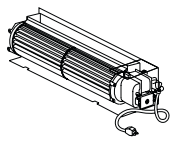

Catalog	Model	Description
80L84	FBK-100	Standard Blower, Single Speed
80L85	FBK-200	Variable Blower with Wall Switch

Touch-Up Paint Kit

Repair of minor scratches and discoloration of the fireplace black painted surfaces may be accomplished with the touch-up paint kit.

Catalog No.	Model No.	Description
F3373	---	Black touch-up paint, satin, firebox interior
F1882	SCTPSAB	Black touch-up paint, powder coat exterior

Termination Guard Kits

The vent termination guards may be used to cover the vent termination on the exterior of the home to minimize exposure to the hot surface of the termination.

Termination Shroud (fits H1968)

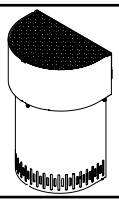

Deluxe Termination Guard (fits 94L10 and H1968)

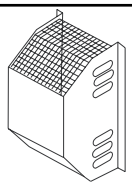

Square Termination Guard (fits 94L10 and H1968)

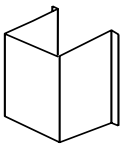

Catalog	Model	Description
H5820	4.5HTSK	Termination Shroud
87L02	SV4.5HGS	Termination Guard, Deluxe
17M52	SV4.5HGS-1	Termination Guard, Square

Glass Media Kits

Catalog	Model	Description
H8412	CRSHGL-RBLK	Bag of Glass Media, Reflective Black
H8424	CRSHGL-RBLU	Bag of Glass Media, Reflective Blue
H8413	CRSHGL-P	Bag of Glass Media, Platinum
H8538	CRSHGL-GF	Bag of Glass Media, Goldfinger
H8539	CRSHGL-C	Bag of Glass Media, Copper

Thermostatic Control Kits

Feature a thermostatic ON/OFF mode as well as manual ON/OFF operation.

RC-S-Touch, State-of-the-art control with touch screen operation			Catalog Number
	• Backlit LCD display • Transmitter wall-mounted docking station • Receiver wall-mounted or placed in the control compartment • Thermostatic or manual ON/OFF operation	• Programmable weekday/weekend modes • Flame icon • Low battery indicator • Batteries included	H8865 Model RC-S-TOUCH
RC-S-STAT, Thermostatic or manual operation			**Catalog Number**
	• LCD display • Receiver wall-mounted or placed in the valve compartment • Up to 9-hr countdown timer	• Child lock • Low battery indicator • Batteries included	H8861 Model RC-S-STAT
WS-S-STAT, Wall control			**Catalog Number**
	• Large LCD display • Shows room and set temperatures in °F and °C • Wall-mounted	• Thermostatic or manual ON/OFF operation • Connects to wall switch wire	H8864 Model WS-S-TSTAT

ON/OFF and Timer Control Kits

Feature a timed ON/OFF mode as well as manual ON/OFF operation.

Cost Effective Solution			Catalog Number
	• Manual ON/OFF operation • Works with millivolt and low voltage electronic ignition controls • Kit includes remote and receiver		F2236 Model RCKit4001
RC-S-1, Manual or up to 3-hour timer modes			**Catalog Number**
	• LCD display • Shows room temperature in °F and °C • Wall clip included • Receiver wall-mounted or placed in the control compartment	• White face plate included • Flame icon • Low battery indicator • Batteries included	H8860 Model RC-S-1
WS-S-TMR, Wall Control			**Catalog Number**
	• 4-button timer with 30/60/120/OFF minutes • Wall-mounted • Perfect for rental and resort applications • Connects to wall switch wire		H8863 Model WS-S-TMR

OFF/ON Wall Switch Kit

The OFF/ON wall switch kit can be used to control the operation of the fireplace burner or optional FBK-100 blower. Install the OFF/ON wall switch in a convenient location near the fireplace.

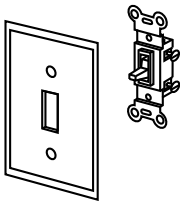

Catalog	Model
85L87	FWSK

LIGHTING INSTRUCTIONS - ENGLISH

FOR YOUR SAFETY READ BEFORE OPERATING

WARNING: If you do not follow these instructions exactly, a fire or explosion may result causing property damage, personal injury or loss of life.

A. This appliance is equipped with an ignition device which automatically lights the pilot. Do not try to light the pilot by hand.

B. BEFORE OPERATING smell all around the appliance area for gas. Be sure to smell next to the floor because some gas is heavier than air and will settle on the floor.

WHAT TO DO IF YOU SMELL GAS:

- Do not try to light any appliance.
- Do not touch any electric switch; do not use any phone in your building.
- Immediately call your gas supplier from a neighbor's phone. Follow the gas supplier's instructions.
- If you cannot reach your gas supplier, call the fire department.

C. If any portion of this appliance does not operate as the instructions indicate, do not try to repair it, call a qualified service technician. Do not use tools. Force or attempted repair may result in a fire or explosion.

D. Do not use this appliance if any part has been under water. Immediately call a qualified service technician to inspect the appliance and to replace any part of the control system and any gas control which has been under water.

OPERATING INSTRUCTIONS

1. STOP! Read the safety information above on this label.
2. Read the Care and Operation manual including the section on "Remote Control System," (if applicable).
3. Slide the switch on the receiver, wall switch or ON/OFF switch to "OFF."
4. Turn "OFF" all electric power to the appliance. Note: The control may have a battery backup (remove batteries, if installed).
5. This appliance is equipped with an ignition device which automatically lights the pilot. Do not try to light the pilot by hand.
6. Wait five (5) minutes to clear out any gas. Then smell for gas, including near the floor. If you smell gas, STOP! Follow "B" in the safety information above on this label. If you don't smell gas, go to the next step.
7. Turn on all electric power to the appliance. Note: The control may have a battery backup (install batteries, if applicable).
8. Slide the switch on the receiver to REMOTE or ON/OFF switch /wall switch to ON.
9. (if applicable) Press ON/OFF button on remote control transmitter to "ON."
10. (if applicable) Set thermostat on remote control to desired setting.
11. If the appliance will not operate, follow the instructions "To Turn Off Gas To Appliance" and call your service technician or gas supplier.

Electronic Gas Control Valve - SIT

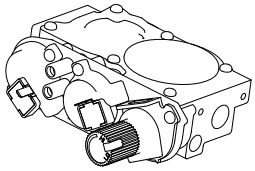

Electronic Pilot Assembly

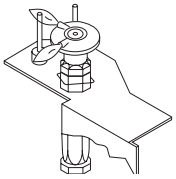

TO TURN OFF GAS TO APPLIANCE

1. Slide the switch on the receiver, wall switch or ON/OFF switch to "OFF.
2. (if applicable) Press ON/OFF button on remote control transmitter to "OFF."
3. Turn off all electric power to the appliance if service is to be performed. Note: The control may have a battery backup (remove batteries, if installed).
4. Close the main line gas shut-off valve.

DANGER

HOT GLASS WILL CAUSE BURNS.

DO NOT TOUCH GLASS UNTIL COOLED.

NEVER ALLOW CHILDREN TO TOUCH GLASS.

A barrier designed to reduce the risk of burns from the hot viewing glass is provided with this appliance and shall be installed for the protection of children and other at-risk individuals.

P/N 900337-00, Rev. 0

LIGHTING INSTRUCTIONS - FRENCH

POUR PLUS DE SÉCURITÉ LIRE AVANT DE METTRE EN MARCHE

AVERTISSEMENT. Quiconque ne respecte pas à la lettre les instructions dans la présente notice risque de déclencher un incendie ou une explosion entraînant des dommages, des blessures ou la mort.

A. Cet appareil est muni d'un dispositif d'allumage qui allume automatiquement la veilleuse. Ne tentez pas d'allumer la veilleuse manuellement.

B. AVANT DE FAIRE FONCTIONNER, reniflez tout autour de l'appareil pour déceler une odeur de gaz. Reniflez près du plancher, car certains gaz sont plus lourds que l'air et peuvent s'accumuler au niveau du sol.

QUE FAIRE SI VOUS SENTEZ UNE ODEUR DE GAZ :

- Ne pas tenter d'allumer d'appareil.
- Ne touchez à aucun interrupteur; ne pas vous servir des téléphones se trouvant dans le bâtiment.
- Appelez immédiatement votre fournisseur de gaz depuis un voisin. Suivez les instructions du fournisseur.
- Si vous ne pouvez rejoindre le fournisseur, appelez le service des incendies.

C. Si un élément de cette unité ne fonctionne pas tel que décrit dans les instructions, n'essayez pas de le réparer, appelez un technicien qualifié. N'utilisez-pas d'outils. Le fait de forcer la manette ou de la réparer peut déclencher une explosion ou un incendie.

D. N'utilisez pas cet appareil s'il a été plongé dans l'eau, même partiellement. Faites inspecter l'appareil par un technicien qualifié et remplacez toute partie du système de contrôle et toute commande qui ont été plongés dans l'eau.

INSTRUCTIONS DE MISE EN MARCHE

1. ARRÊTEZ ! Lisez les avertissements de sécurité à l'endos de cette étiquette.
2. Lisez le manuel d'utilisation et d'entretien incluant la section « Système de télécommande » (si applicable).
3. Placez l'interrupteur mural ou "on/off" en position "off."
4. Coupez l'alimentation électrique de l'appareil. Note: Le contrôleur peut avoir une batterie de secours (retirer les batteries au besoin).
5. Cet appareil est muni d'un dispositif d'allumage qui allume automatiquement la veilleuse. Ne tentez pas d'allumer la veilleuse manuellement.
6. Attendre cinq (5) minutes pour laisser échapper tout le gaz. Reniflez tout autour de l'appareil, y compris près du plancher, pour déceler une odeur de gaz. Si vous sentez une odeur de gaz, ARRÊTEZ ! Passez à l'étape B des instructions de sécurité sur la portion supérieure de cette étiquette. S'il n'y a pas d'odeur de gaz, passez à l'étape suivante.
7. Mettez l'appareil sous tension. Note: Le contrôleur peut avoir une batterie de secours (installer les batteries au besoin).
8. Placez l'interrupteur du récepteur en position "REMOTE" (ou l'interrupteur mural en position ON).
9. (Si applicable) Appuyez sur le bouton "ON/OFF" pour sélectionner "ON".
10. (Si applicable) Ajustez le thermostat sur la télécommande à l'ajustement désiré.
11. Si l'appareil ne se met pas en marche, suivez les instructions intitulées « Comment couper l'admission de gaz de l'appareil » et appelez un technicien qualifié ou le fournisseur de gaz.

Valve électronique - SIT

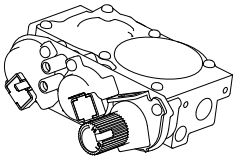

Module de veilleuse électronique

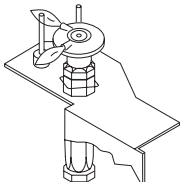

COMMENT COUPER L'ADMISSION DE GAZ DE L'APPAREIL

1. Placez l'interrupteur mural ou "on/off" en position "off."
2. (Si applicable) Sélectionnez OFF sur le récepteur.
3. Coupez l'alimentation électrique de l'appareil s'il faut procéder à l'entretien. Note: Le contrôleur peut avoir une batterie de secours (retirer les batteries au besoin).
4. Fermer la valve de gaz principale.

DANGER

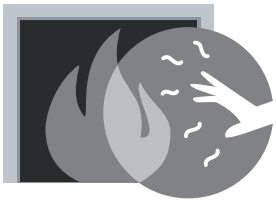

VITRE CHAUDE
RISQUE DE BRÛLURES.

NE TOUCHEZ PAS UNE VITRE NON REFROIDIE.

NE LAISSEZ JAMAIS UN ENFANT DE TOUCHER LA VITRE.

L'écran pare-étincelles fourni avec ce foyer réduit le risque de brûlure en cas de contact accidentel avec la vitre chaude et doit être installé pour la protection Des enfants et Des personnes à risques.

P/N 900334-00, Rev. 0

TROUBLESHOOTING

Before troubleshooting, ensure that the fireplace main line gas shutoff valve and the wall switch are in the ON position. The following troubleshoots the fireplace only to an elementary level. For detailed remote and ignition system troubleshooting, refer to the instructions provided with the remote.

Detailed valve system troubleshooting should only be performed by a qualified service technician.

Troubleshooting Electronic Systems

SYMPTOM	POSSIBLE CAUSES	CORRECTIVE ACTION
1. Nothing happens when the fireplace is turned ON/OFF.	**a.** Remote is not functioning properly.	Check that the wall switch plate is set to REMOTE.
		Operate the fireplace from the wall plate switch.
		Replace remote and/or wall switch batteries.
	b. Gas is not reaching the fireplace.	Check the gas supply and gas shutoff valves. *
	c. Unit is not receiving power.	Check/replace backup batteries behind the wall plate.
		Replace unit battery backup.
		Check building circuit breakers to ensure power is ON to the fireplace.
2. The main burner does not light and the igniter is sparking.	**a.** Gas is not reaching the fireplace.	Check the gas supply and gas shutoff valves.
	b. Loose wires to the valve.	Check control compartment for any obviously loose wiring (call a service technician, if necessary).
	c. Loose wires to ignition module.	Check control compartment for any obviously loose wiring (call a service technician, if necessary).
	d. Air in the gas line.	Purge gas line of air (call a service technician if required).
	e. Unit is not receiving power.	Replace unit battery backup.
3. The main Burner comes on but then goes out.	**a.** Fireplace has not established proper draft.	Switch CPI/IPI switch to pilot ON mode; wait two (2) minutes; then relight.
	b. Gas is not reaching the fireplace.	Check the gas supply and gas shutoff valves.
	c. Loose wires to the valve or ignition module.	Check control compartment for any obviously loose wiring (call a service technician, if necessary).
	d. Pilot flame is not engulfing the sensor.	Call a service technician.
	e. Obstructed vent system.	Call a service technician.
4. Soot is present on the glass.	**a.** Initial fireplace operation.	A white film may develop on the glass during the first few fires as part of the burn-in process. The first few times you use the fireplace, clean the glass after each use (AFTER THE GLASS HAS COMPLETELY COOLED); otherwise, the white film will bake onto the glass and become difficult to remove. See glass cleaning instructions in the MAINTENANCE section of this manual.
	b. Improper vent restrictor setting.	Open the air shutter by adjusting the air shutter adjustment lever according to the instructions in this manual.
	c. Improper air shutter opening.	Open the air shutter by pushing in the rod.
	d. Excessive flame impingement on panels and fireplace ceiling.	Properly position the media.
5. Poor flame and/or blue flame.	**a.** Door seal is not properly aligned, causing gaps and air leaks.	Remove and realign the door so the gasket seal is fully engaged around the door frame.

***The unit may have multiple gas supply shutoffs (the main gas supply valve in the house, the gas supply valve in the fireplace control compartment, and/or an additional shutoff valve near the fireplace).**

REPLACEMENT PARTS

Contact an IHP dealer to obtain any of these parts. Contact IHP for the phone number of your nearest IHP dealer.

Installer Replacement Parts

Description		42”		54”	
		Catalog Number	Qty	Catalog Number	Qty
---	Control Compartment Access Door	F3938	1	H8435	1
---	Control Compartment Access Door Gasket	H8436	1	H8436	1
---	Gas Train Assembly, Natural Gas	H8796	1	H8795	1
---	Gas Train Assembly, Propane	H8798	1	H8797	1
1	Orifice, #43 (0.089”) Natural Gas	99K75	1	---	1
1	Orifice, #55 (0.052”) Propane	19L52	1	---	1
1	Orifice, #37 (0.104”) Natural Gas	---	1	24M10	1
1	Orifice, #52 (0.0635”) Propane	---	1	37G00	1
2	Burner Assembly	H9190	1	H9189	1
---	Wall Switch Receiver Kit	H8564	1	H8564	1
3	DFC Wire Harness	H8601	1	H8601	1
4	Ground Wire	H7278	1	H7278	1
5	DFC Ignition Board	J7906	1	J7906	1
6	Natural Gas Valve	H8562	1	H8562	1
7	Propane Gas Valve	H8594	1	H8594	1
8	Natural Gas Pilot Assembly	H7268	1	H7268	1
9	Propane Pilot Assembly	H7269	1	H7269	1
10	Glass Door Latch	H8433	1	H8433	1
---	Flex Gas Connector Assembly	93L32	1	93L32	1
---	Orifice Connector	H7847	1	H7847	1
---	CPI/IPI Switch	27K30	1	27K30	1
---	DFC Wire Harness Assembly	H8601	1	H8601	1
---	Non-combustible Fiberboard Kit, 2” thickness	J7566	1	J7565	1
---	Back Panel, Black Porcelain	H8800	1	H8804	1
---	Side Panel RH, Black Porcelain	H8801	1	H8805	1
---	Side Panel LH, Black Porcelain	H8802	1	H8806	1
---	Power Transformer	H8006	1	H8006	1
---	Floor Section, Rear	H8790	1	H8791	1
---	Floor Section, Front	H8792	1	H8793	1
---	Battery Holder (for backup batteries)	H8803	1	H8803	1
---	Surround, Black (with gas shutoff)	F2261	1	F2260	1
---	Surround, Stainless (with gas shutoff)	F2263	1	F2262	1
---	Superior® Badge (logo)	J8150	1	J8150	1

⚠ WARNING

Failure to position the parts in accordance with these diagrams or failure to use only parts specifically approved with this appliance may result in property damage or personal injury.

⚠ AVERTISSEMENT

Risque de dommages ou de blessures si les pièces ne sont pas installées conformément à ces schémas et ou si des pièces autres que celles spécifiquement approuvées avec cet appareil sont utilisées.

Replacement Parts

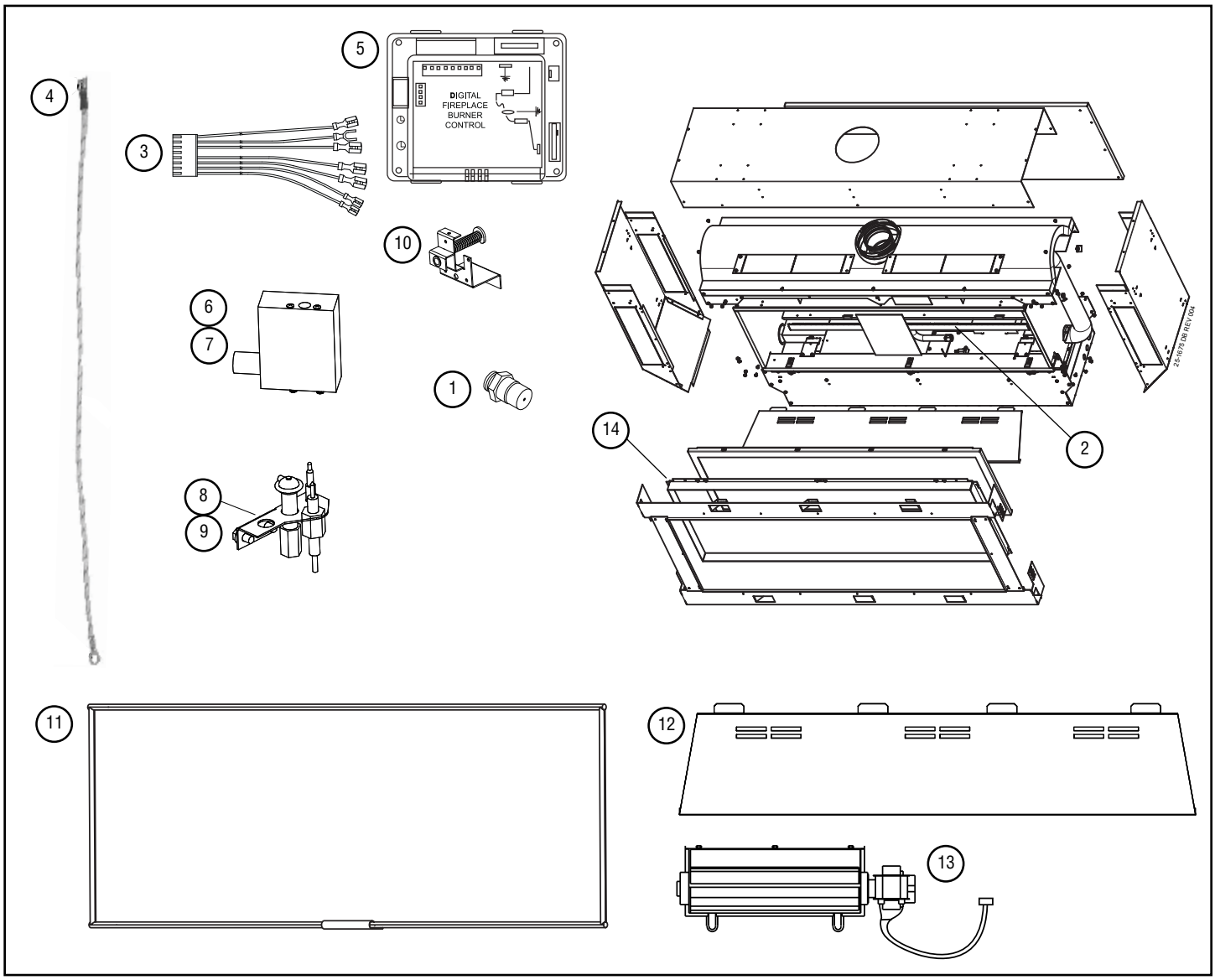

Homeowner Replacement Parts

Description		42”		54”	
		Catalog Number	Qty	Catalog Number	Qty
---	Remote Control Transmitter Kit	F2236	1	F2236	1
11	Glass Door	H8799	1	H8431	1
12	Top Baffle	H8787	1	H8583	1
13	Blower Assembly FBK-250 (optional)	80L86	1	80L86	1
14	Barrier	J7427	1	J7426	1

⚠ WARNING

Never use substitute materials. Use of non-approved parts can result in poor performance, safety hazards, and may void the warranty.

NOTES

Innovative Hearth Products
Superior® Brand Gas Fireplaces, Stoves and Inserts
20 Year Limited Warranty

THE WARRANTY

Innovative Hearth Products ("IHP") 20 Year Limited Warranty warrants your Superior® Brand gas fireplace, Stove or Insert ("Product") to be free from defects in materials and workmanship at the time of manufacture. The product body, firebox and barrier carry the 20 Year Limited Warranty. Ceramic glass carries the 20 Year Limited Warranty against thermal breakage only. After installation, if covered components manufactured by IHP are found to be defective in materials or workmanship during the 20 Year Limited Warranty period and while the Product remains at the site of the original installation, IHP will, at its option, repair or replace the covered components. If repair or replacement is not commercially practical, IHP will, at its option, refund the purchase price or wholesale price of the IHP product, whichever is applicable. IHP will also pay IHP prevailing labor rates, as determined in its sole discretion, incurred in repairing or replacing such components for up to five years. THERE ARE EXCLUSIONS AND LIMITATIONS to this 20 Year Limited Warranty as described herein.

COVERAGE COMMENCEMENT DATE

Warranty coverage begins on the date of purchase. In the case of new home construction, warranty coverage begins on the date of first occupancy of the dwelling or six months after the sale of the Product by an independent IHP dealer/distributor, whichever occurs earlier. The warranty shall commence no later than 24 months following the date of product shipment from IHP, regardless of the installation or occupancy date.

EXCLUSIONS AND LIMITATIONS

This 20 Year Limited Warranty applies only if the Product is installed in the United States or Canada and only if operated and maintained in accordance with the printed instructions accompanying the Product and in compliance with all applicable installation and building codes and good trade practices.

This warranty is non-transferable and extends to the original owner only. The Product must be purchased through a listed supplier of IHP and proof of purchase must be provided. The product body, firebox and barrier carry the 20 Year Limited Warranty from the date of installation. Vent components, trim components and paint are excluded from this 20 Year Limited Warranty. The following do not carry the 20 Year Limited Warranty but are warranted as follows:

Burner – Repair or replacement for one year from the date of installation
Gas components – Repair or replacement for one year from the date of installation
Gaskets – Repair or replacement for one year from the date of installation
Logs – Replacement for one year from the date of installation against thermal breakage only
Optional blowers & remote controls – Repair or replacement for one year from the date of installation
Optional glass doors – Repair or replacement for 90 days from the date of installation
Tempered glass - Replacement for one year from the date of installation
Labor coverage – Prevailing IHP labor rates apply for the warranty period of the component

Parts not otherwise listed carry a 90 day warranty from the date of installation.

Whenever practicable, IHP will provide replacement parts, if available, for a period of 10 years from the last date of manufacture of the Product.

IHP will not be responsible for: (a) damages caused by normal wear and tear, accident, riot, fire, flood or acts of God; (b) damages caused by abuse, negligence, misuse, or unauthorized alteration or repair of the Product affecting its stability or performance (The Product must be subjected to normal use. The Product is designed to burn either natural or propane gas only. Burning conventional fuels such as wood, coal or any other solid fuel will cause damage to the Product, will produce excessive temperatures and could result in a fire hazard.); (c) damages caused by failing to provide proper maintenance and service in accordance with the instructions provided with the Product; (d) damages, repairs or inefficiency resulting from faulty installation or application of the Product.

IHP is not responsible for inadequate fireplace system draft caused by air conditioning and heating systems, mechanical ventilation systems, or general construction conditions which may generate negative pressure in the room in which the appliance is installed. Additionally IHP assumes no responsibility for drafting conditions caused by venting configurations, adjoining trees or buildings, adverse wind conditions or unusual environmental factors and conditions that affect the operation of the unit.

This 20 Year Limited Warranty covers only parts and labor as provided herein. In no case shall IHP be responsible for materials, components or construction, which are not manufactured or supplied by IHP or for the labor necessary to install, repair or remove such materials, components or construction. Additional utility bills incurred due to any malfunction or defect in equipment are not covered by this warranty. All replacement or repair components will be shipped F.O.B. from the nearest stocking IHP factory.

LIMITATION ON LIABILITY

It is expressly agreed and understood that IHP's sole obligation and the purchaser's exclusive remedy under this warranty, under any other warranty, expressed or implied, or in contract, tort or otherwise, shall be limited to replacement, repair, or refund, as specified herein.

In no event shall IHP be liable for any incidental or consequential damages caused by defects in the Product, whether such damage occurs or is discovered before or after repair or replacement, and whether such damage is caused by IHP's negligence. IHP has not made and does not make any representation or warranty of fitness for a particular use or purpose, and there is no implied condition of fitness for a particular use or purpose.

IHP makes no expressed warranties except as stated in this 20 Year Limited Warranty. The duration of any implied warranty is limited to the duration of this expressed warranty.

No one is authorized to change this 20 Year Limited Warranty or to create for IHP any other obligation or liability in connection with the Product. Some states and provinces do not allow the exclusion or limitation of incidental or consequential damages, so the above limitations or exclusions may not apply to you. The provisions of this 20 Year Limited Warranty are in addition to and not a modification of or subtraction from any statutory warranties and other rights and remedies provided by law.

INVESTIGATION OF CLAIMS AGAINST WARRANTY

IHP reserves the right to investigate any and all claims against this 20 Year Limited Warranty and to decide, in its sole discretion, upon the method of settlement.

To receive the benefits and advantages described in this 20 Year Limited Warranty, the appliance must be installed and repaired by a licensed contractor approved by IHP.

Contact IHP at the address provided herein to obtain a listing of approved dealers/distributors. **IHP shall in no event be responsible for any warranty work done by a contractor that is not approved without first obtaining IHP's prior written consent.**

HOW TO REGISTER A CLAIM AGAINST WARRANTY

In order for any claim under this warranty to be valid, you must contact the IHP dealer/distributor from which you purchased the product. If you cannot locate the dealer/distributor, then you must notify IHP in writing. IHP must be notified of the claimed defect in writing within 90 days of the date of failure. Notices should be directed to the IHP Warranty Department at 1769 East Lawrence Street; Russellville, AL 35654 or visit our website at WWW.SUPERIORFIREPLACES.US.COM.

Printed in U.S.A. © 2013 Innovative Hearth Products

P/N 900223-00, Rev. C 02/2018

Innovative Hearth Products
1769 East Lawrence Street • Russellville, AL 35654

SuperiorFireplaces.us.com

Record the following important information about your fireplace:

Fireplace model number	
Fireplace serial number	
Date fireplace was Installed	
Type of gas fireplace uses	
Dealer name	

Innovative Hearth Products reserves the right to make changes at any time, without notice, in design, materials, specifications, prices and also to discontinue colors, styles and products. Consult your local distributor for fireplace code information.

Printed in U.S.A. © 2014 Innovative Hearth Products
P/N 900079-02 Rev. H 12/2018

P900079-02

INNOVATIVE HEARTH PRODUCTS

1769 East Lawrence Street • Russellville, AL 35654