DDX-1 Transceiver

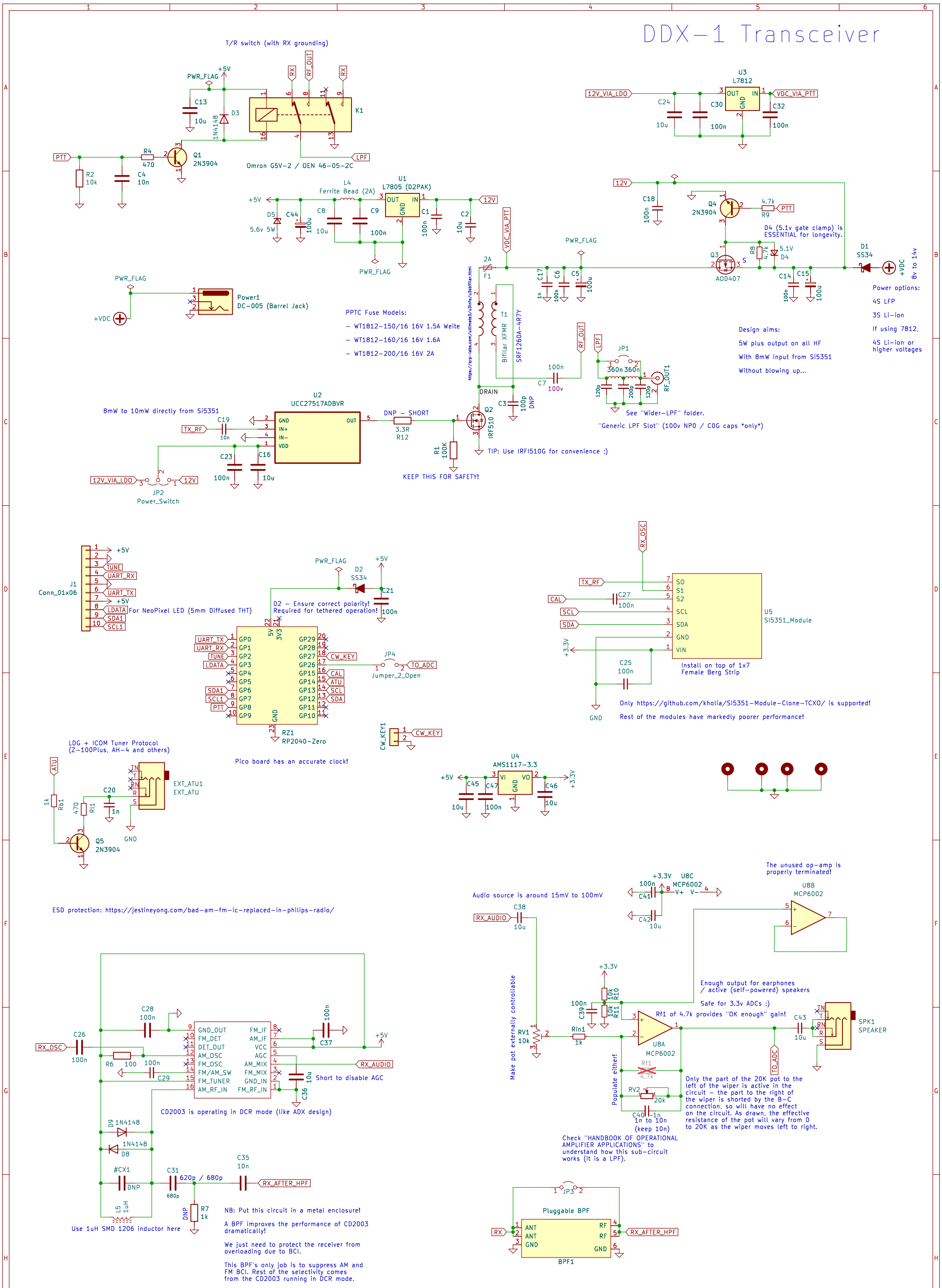

Supported external accessories:

- Power (voltage + current) monitoring (INA219 / analog meter)
- LDG Z-100 Plus ATU
- GPS module (NEO-6M)
- External LM386 audio amplifier module

With Pluggable BPF now!

Author: Dhiru Kholia (VU3CER)

Sheet: /

File: HF-PA-v10.kicad_sch

Title: DDX-1 Digital Transceiver

Size: User	Date: 2023-11-30	**Rev: Revision 1.10**
KiCad E.D.A. kicad 7.0.10-7.0.10~ubuntu22.04.1		Id: 1/1