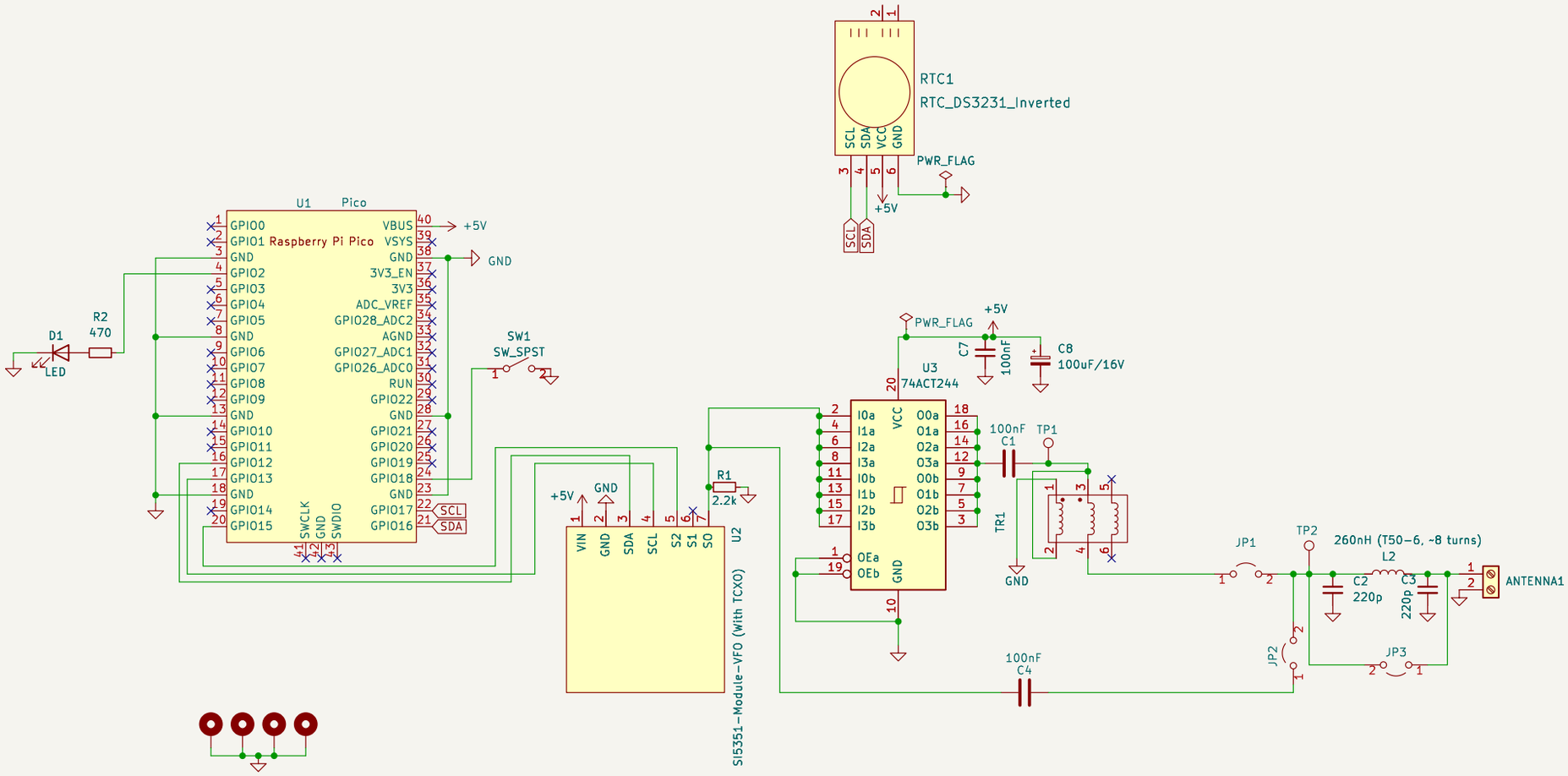

Dhiru Kholia (VU3CER)

Sheet: /

File: Amplified-WSPR-Beacon-v3.kicad_sch

Title: Minimal, reliable, cheap WSPR + FT8 beacon - "Rogue Radio v2"

Size: User	Date: 2022-12-05	Rev: V0.2
KiCad E.D.A. kicad 6.99.0-unknown-3d8d27caf3~164~ubuntu22.04.1		Id: 1/1