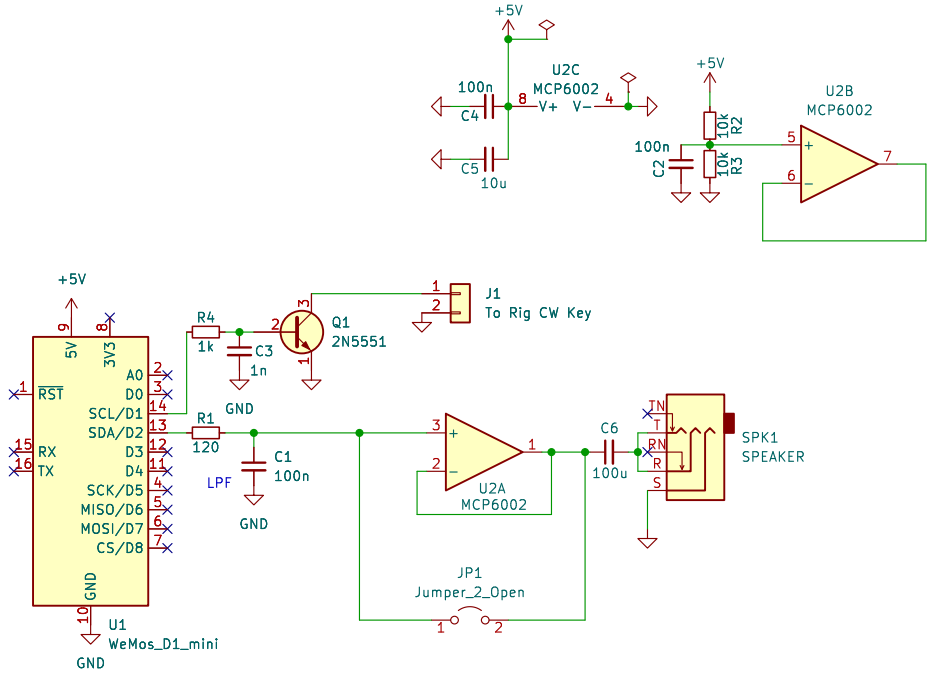

WeMos board is powered from a regular USB battery power bank.

Sheet: /
File: circuit.kicad_sch

Title: WiFi Combo CW Keyer

Size: User	Date: 2024-01-20	Rev: 0.01
KiCad E.D.A. kicad 7.0.10-7.0.10~ubuntu22.04.1		Id: 1/1