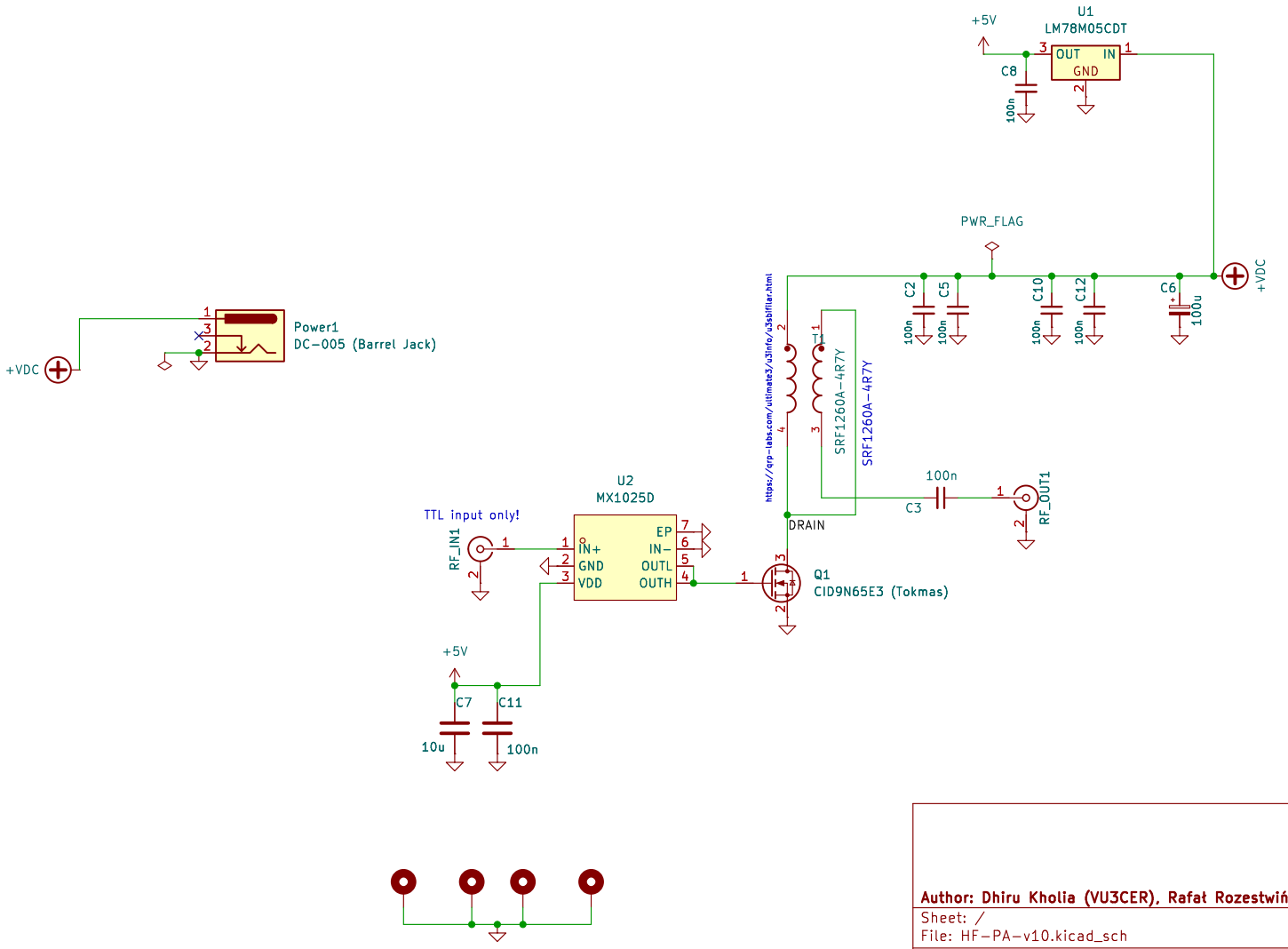

Author: Dhiru Kholia (VU3CER), Rafał Rozestwiński, Brad (K1TE)

Sheet: /

File: HF-PA-v10.kicad_sch

Title: GSD Single-Ended Hack Amp (SMD)

Size: User	Date: 2025-05-15	Rev: v4.01
KiCad E.D.A. 9.0.3		Id: 1/1