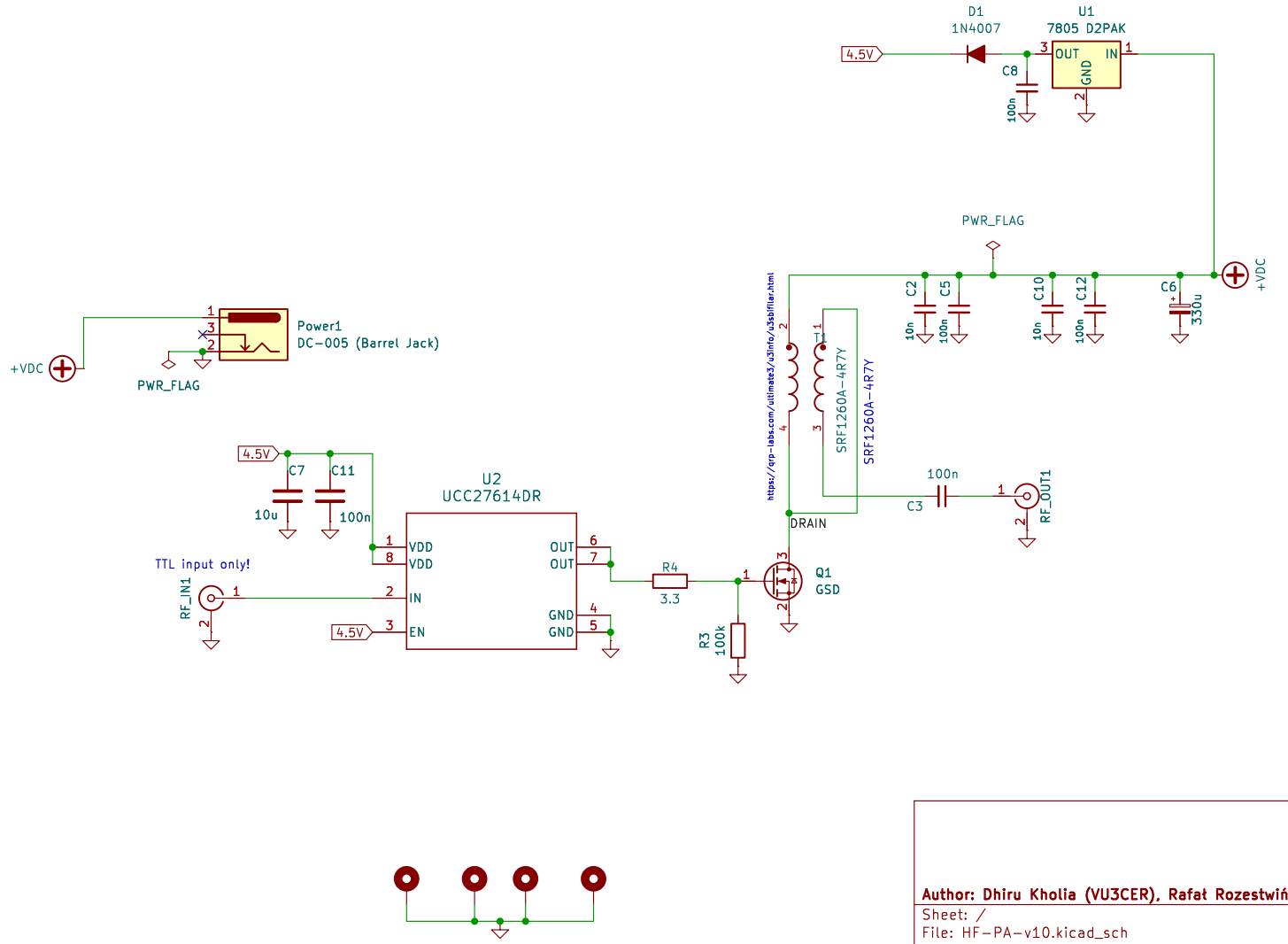

Author: Dhiru Kholia (VU3CER), Rafał Rozestwiński, Brad (K1TE)

Sheet: /

File: HF-PA-v10.kicad_sch

Title: GSD Single-Ended Hack Amp (SMD)

Size: User	Date: 2025-03-20	Rev: v1.01
KiCad E.D.A. 9.0.0		Id: 1/1