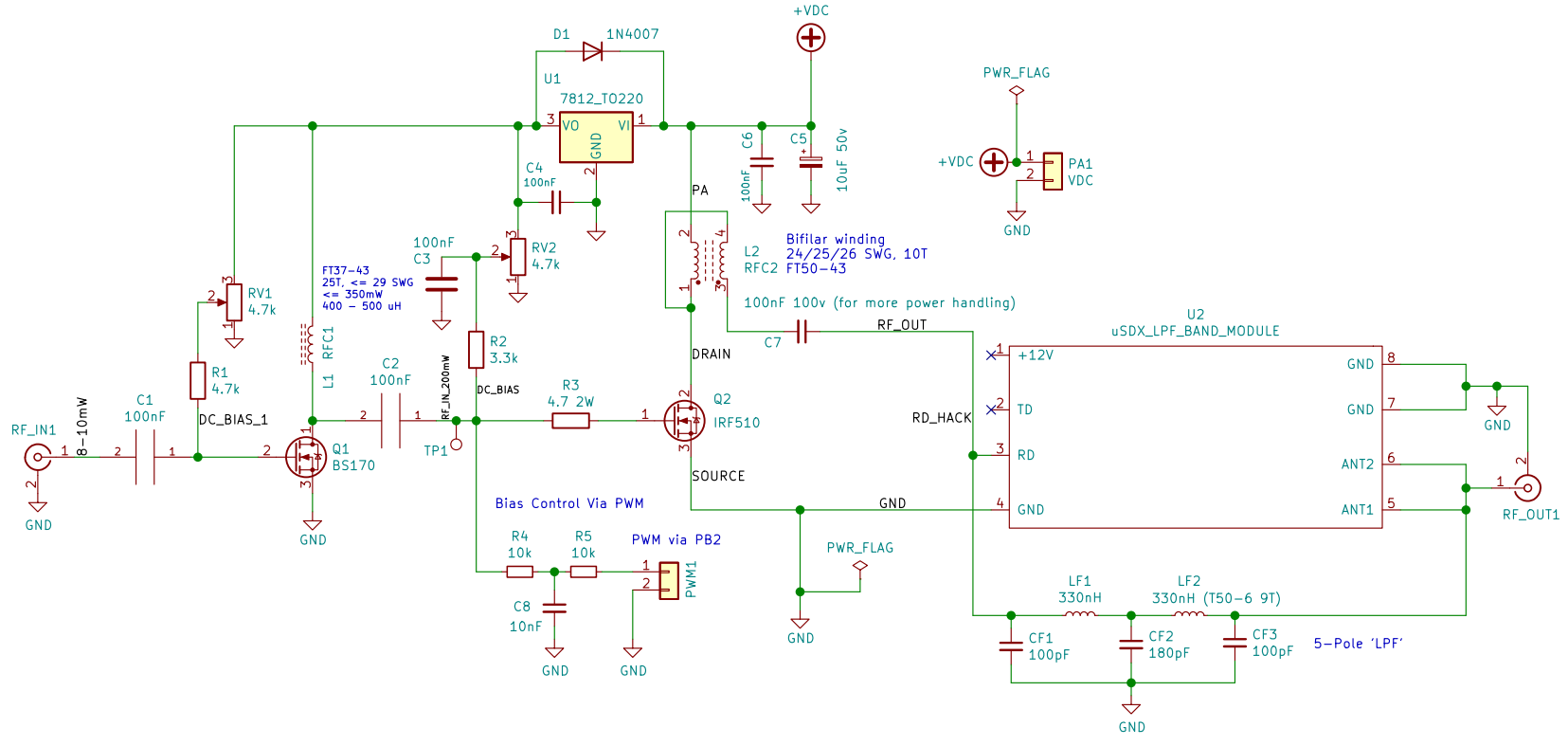

Robust Class-D Single-ended "5W+" IRF510 powered HF PA
Uses ideas, and support from G0UPL (QRP Labs), VU3SXT, VU2ASH, VU2SPF, AC7LX, PY2OHH
Motivation: We need usable power on the 15m band!
Designed for https://github.com/kholia/Easy-Digital-Beacons-v1 project
Author: Dhiru Kholia (VU3CER)

Sheet: /
File: HF-PA.sch

Title: Easy-PA-With-Pluggable-LPF

Size: User	Date: 2021-10-16	**Rev: v4.1**
KiCad E.D.A. eeschema 5.99.0+really5.1.10+dfsg1-1		Id: 1/1