For handling max 10W RF power.

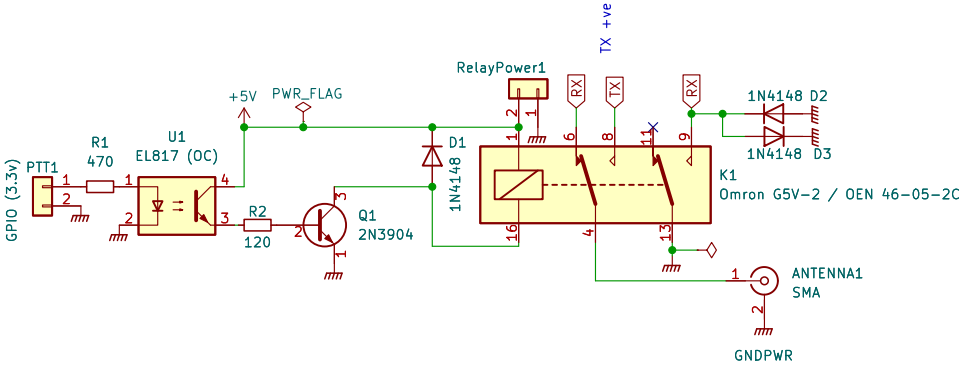

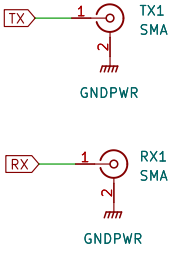

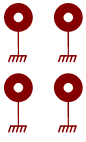

Author: Dhiru Kholia (VU3CER)

Sheet: /

File: TR-Switch.kicad_sch

Title: PTT-Controlled T/R Switch

Size: User	Date: 2022-04-23	**Rev: v0.01**
KiCad E.D.A. eeschema 6.0.9-8da3e8f707~116~ubuntu22.04.1		Id: 1/1