UNLESS OTHERWISE SPECIFIED:
1. T-HANDLE TO BE RED NYLON
2. TRAVEL: 2.0 INCHES MINIMUM

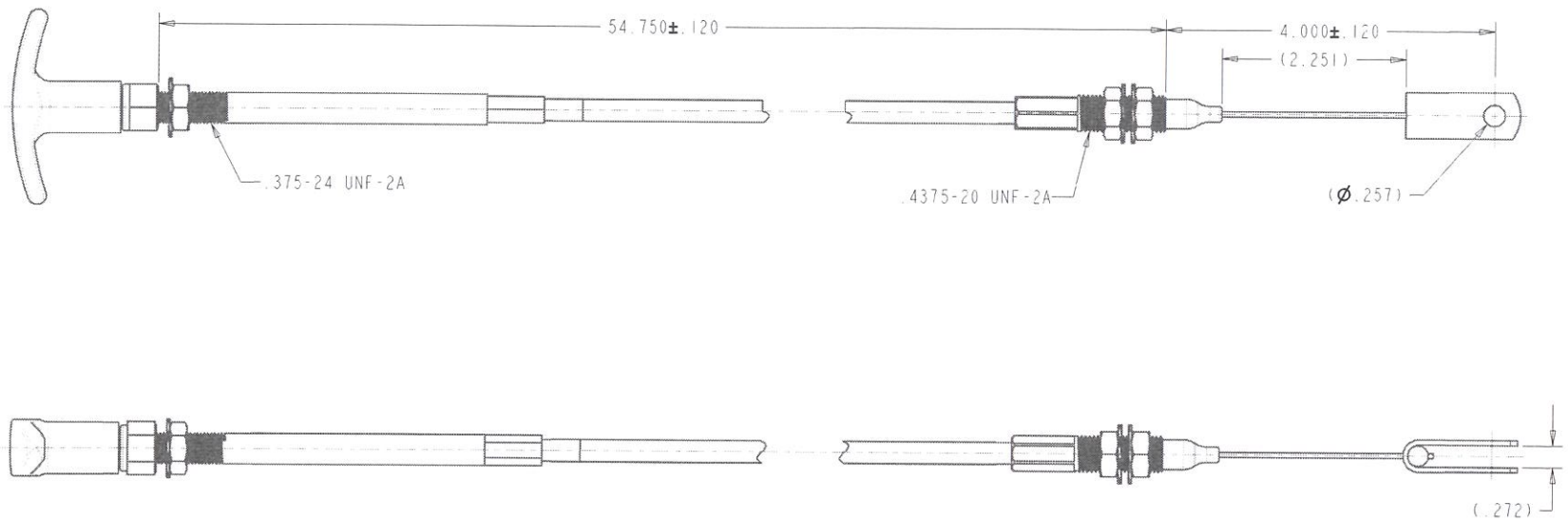

REV	CHANGE RECORD	EC No.	DRAWN	DATE
-	-	-	-	-
-	-	-	-	-
-	-	-	-	-
-	-	-	-	-
-	-	-	-	-
-	-	-	-	-
-	-	-	-	-
PR03	INCREASED BARE CABLE LENGTH	10798	T. MONROE	2022-09-08
PR02	REVISED DESIGN	10798	T. MONROE	2022-08-23
PR01	PROTOTYPE RELEASE	10798	T. MONROE	2022-07-26

UNLESS OTHERWISE SPECIFIED
DIMENSIONS HELD AFTER COATING
DIM & TOL PER ASME Y14.5-2009
CASTINGS & FORGINGS-DIMENSIONS SHOWN PLUS DRAFT PER ASME Y14.8-2009
BREAK ALL SHARP EDGES
USE IDENTICAL WELDS ON IDENTICAL ITEMS.
WELD SYMBOLS TO ANSI AWS A2.2007

PART CLASS	40
SUB CLASS	NA
MODEL No.	3050-950
VERSION No.	A.1
DRAWING No.	3050-950
VERSION No.	A.1

REFER TO PROTECTION NOTICE ISO 16016

FINISH: PER VENDOR SPECS (SEE ASV ENG-STD-001)

THIRD ANGLE PROJECTION

WEIGHT	SCALE
NA	1.000
DRG SIZE	SHEET
A2	1 OF 1

MATERIAL: PER VENDOR SPECS

ALTERNATIVE MATERIAL: PER VENDOR SPECS

DIMENSIONS IN INCHES UNLESS OTHERWISE SPECIFIED

DESCRIPTION: CABLE, LOADER RELEASE - UPPER

PART No.: 3050-950

REV: A