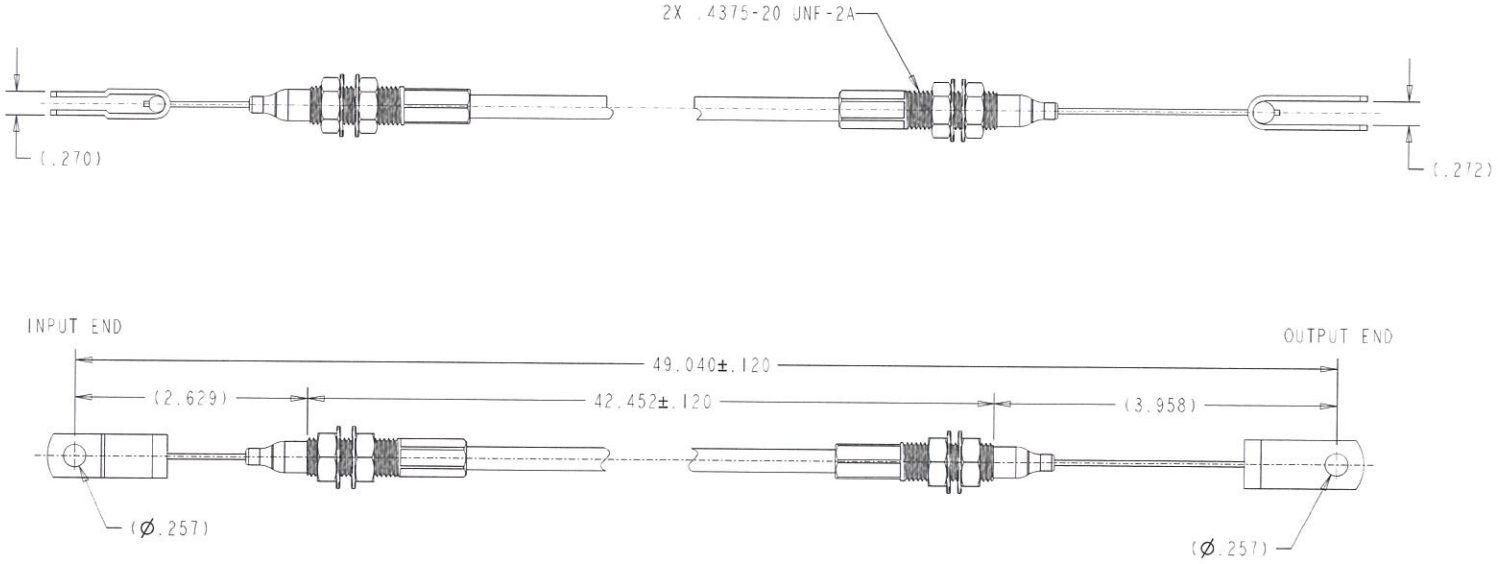

REV	CHANGE RECORD	EC No.	DRAWN	DATE
-	-	-	-	-
-	-	-	-	-
-	-	-	-	-
-	-	-	-	-
-	-	-	-	-
-	-	-	-	-
-	-	-	-	-
-	-	-	-	-
-	-	-	-	-
A	PRODUCTION RELEASE	10798	T. MONROE	2022-07-26

UNLESS OTHERWISE SPECIFIED
DIMENSIONS HELD AFTER COATING
DIM & TOL PER ASME Y14.5-2009
CASTINGS & FORGINGS-DIMENSIONS SHOWN PLUS DRAFT PER ASME Y14.6-2009
BREAK ALL SHARP EDGES
USE IDENTICAL WELDS ON INDENTICAL ITEMS.
WELD SYMBOLS TO ANSI AWS A2.2007

PART CLASS:	40
SUB CLASS:	NA
MODEL No.	VERSION No.
3051-174	A.4
DRAWING No.	VERSION No.
3051-174	A.5

REFER TO PROTECTION NOTICE ISO 15016

MATERIAL: PER VENDOR SPECS

FINISH: PER VENDOR SPECS (SEE ASV ENG-STD-001)

ALTERNATIVE MATERIAL: PER VENDOR SPECS

THIRD ANGLE PROJECTION

DIMENSIONS IN INCHES UNLESS OTHERWISE SPECIFIED

DESCRIPTION: CABLE, LOADER RELEASE - LOWER

WEIGHT	SCALE
NA	1.000
DRG SIZE	SHEET
A2	1 OF 1

PART No. 3051-174

REV A