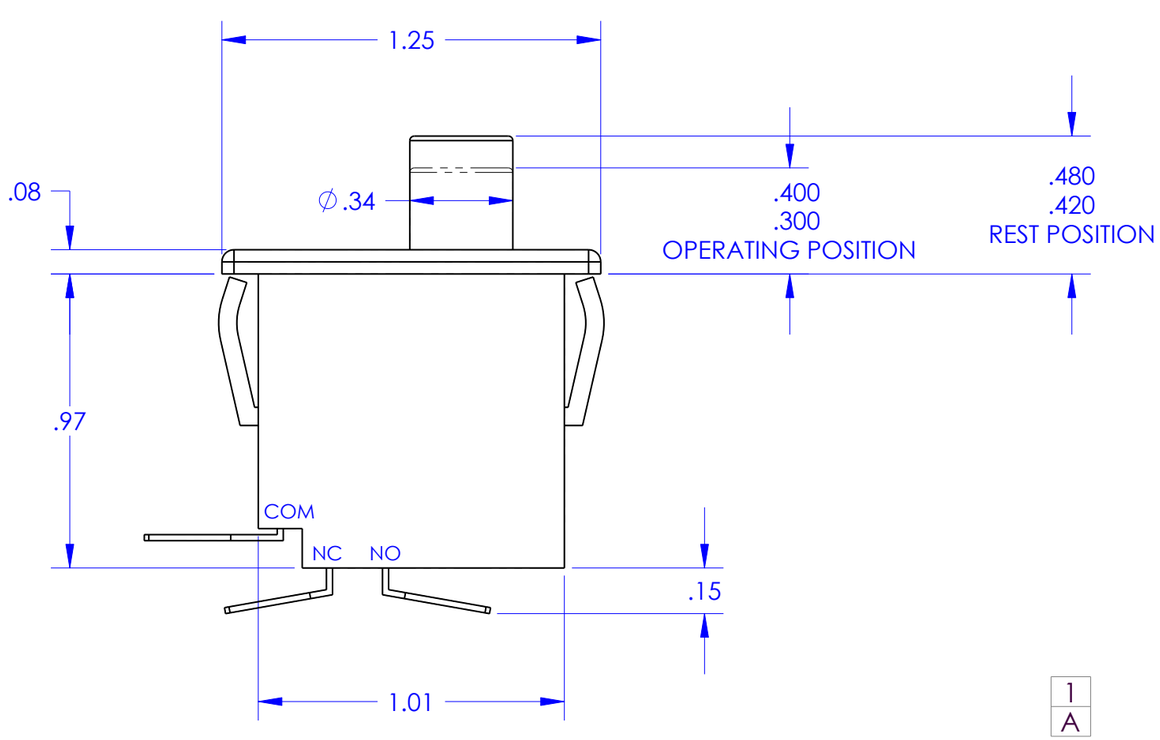

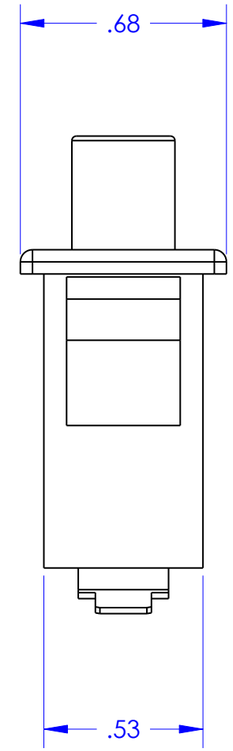

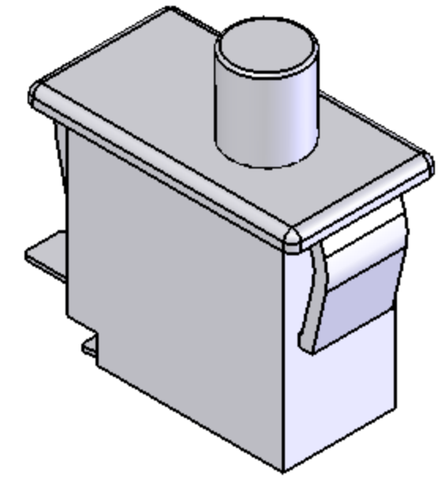

1 A			
Lower Chair Safety Switches	Cherry	E6940A0	5A, 120 V, SPDT switch, 6 provided and spaced 5 mm from 24 Vdc to grounded metal. Enclosure material V-0 (Brewer PN 100208)

APPROVED VENDORS: (OR EQUIV.)	
VENDOR	PART NUMBER
CHERRY CORP.	E6940A0
DIGI-KEY CORP.	CH156-ND

SPECIFICATIONS	
TYPE	SNAP ACTION
FUNCTION	SPDT
ACTION	SHORT BUTTON MOMENTARY
MOUNTING	SNAP-IN PANEL
TERMINALS	.187 x .020 TAB
UL 1054 RATING	10A, 125/250VAC

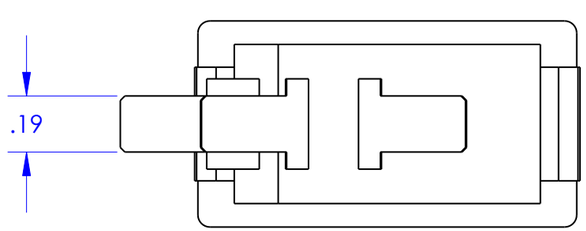

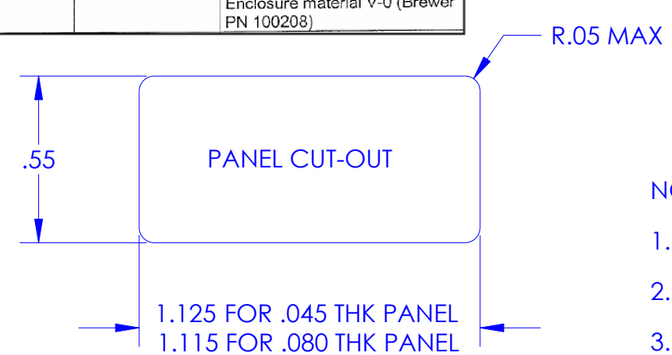

NOTES:

1. THIS ITEM IS "UNDER REGULATORY CONTROL"
2. REGULATORY DOCUMENTION REQUIREMENTS AS PER DS-1160.
3. N/A DENOTES KEY CONTROL CHARACTERISTIC (N=1)

REV.	BY	DATE	ECN NO.	DESCRIPTION
A	MFH	8/8/2006	D5313	ADDED NOTES

REVISIONS

THE BREWER COMPANY
13901 MAIN ST., MENOMONEE FALLS, WISCONSIN 53051

THIS PRINT SHOULD NOT BE REPRODUCED OR DISTRIBUTED WITHOUT AUTHORIZATION OF THE BREWER COMPANY

TOLERANCE UNLESS SPECIFIED (COM. STK. SIZES EXCLUDED)
FRAC. = ± 1/32
DEC. .X = ±.1 ±[2.5]
.XX = ±.01 ±[0.25]
.XXX = ±.005 ±[0.13]
ANG. = ±1.0°

MATERIAL	FINISH
---	---

DR BY	DATE	SHEET	NAME
GHB	8/8/05	1 OF 1	SWITCH, SAFETY, HLT
CHK BY ---	DATE ---	SCALE 2:1	
APP'D BY ---	DATE ---	CALC. WT. 0.02	

SIZE	DO NOT SCALE DRAWING	NUMBER	REV
B		100208	A