Order Number: 6102.5215

6102-5, Mounting: Snap-in, 1.5 mm, Quick connect terminals 4.8 x 0.8 mm, Appliance Inlet: IEC C18

All | Description | Technical Data | Dimension | All Variants | Mating Components | **Order Number**

6102-5

C18

70° C

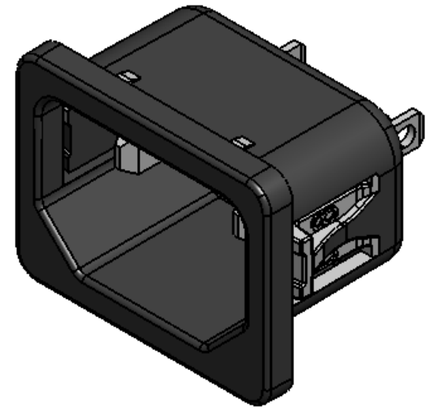

SCHURTER
ELECTRONIC COMPONENTS

Part number: 6102.5215 with quick connect terminals

Description
- Panel Mount:
  Snap-in version from front side
- 1 Function:

- Appliance Inlet, Pin temperature 70 °C, Protection class II
- Solder terminals or quick connect terminals

Approvals
- VDE Certificate Number: 40015595
- UL File Number: E96454

Other versions on request
- Other panel thickness
- Types for enhanced glow wire test requirements acc. IEC 60695-2-12 and -13 for the use in unattended household equipment acc. IEC 60335-1

References
Alternative: Version in protection class I 6100-4

Weblinks
pdf-datasheet, html-datasheet, General Product Information, Approvals, CE declaration of conformity, RoHS, CHINA-RoHS, REACH, Mating Connectors, e-Shop, SCHURTER-Stock-Check, Distributor-Stock-Check, CAD-Drawings, Accessories, Detailed request for product

Technical Data

Ratings IEC	10 A / 250 VAC; 50 Hz
Ratings UL/CSA	15 A / 250 VAC; 60 Hz
Dielectric Strength	> 2 kVAC between L-N (1 min/50 Hz)
Allowable Operation Temp.	-25 °C to 70 °C
Degree of Protection	from front side IP 30 acc. to IEC 60529
Protection Class	Suitable for appliances with protection class II acc. to IEC 61140
Terminal	Solder terminals or quick connect terminals
Panel Thickness s	Snap-in: 1/1.2/1.5/2/2.5/3 mm
Material: Housing	Thermoplastic, black, UL 94V-0

Appliance Inlet	C18 acc. to IEC 60320, UL 498, CSA C22.2 no. 42 (for cold conditions) pin-temperature 70 °C, 10 A, Protection Class II

Dimensions

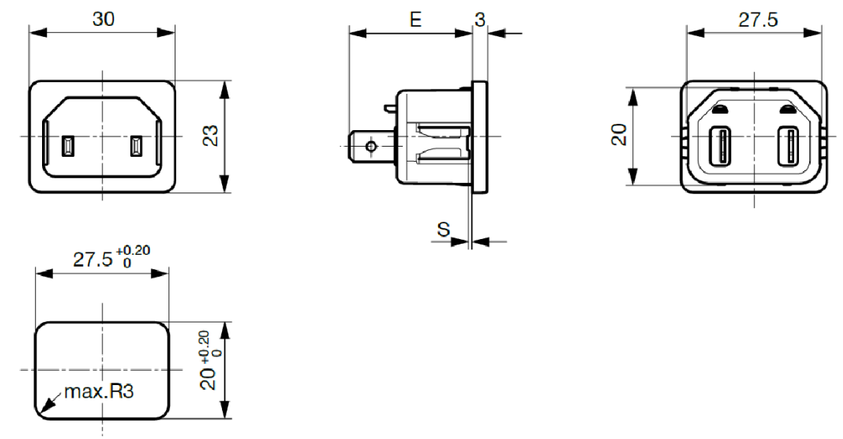

E: Solder terminals 22.5 mm
E:Quick connect terminals 25.5 mm
S: 1.0; 1.2; 1.5; 2.0; 2.5; 3.0 mm

NOTES:

1. REGULATORY CERTIFICATION REQUIRED PER DS-1160.

REV.	BY	DATE	ECN NO.	DESCRIPTION
A	AHC	16-JUL-2015	ER903	PRODUCTION RELEASE

REVISIONS

THE BREWER COMPANY
13901 MAIN STREET
MENOMONEE FALLS, WISCONSIN 53051

THIS PRINT SHOULD NOT BE REPRODUCED OR DISTRIBUTED WITHOUT AUTHORIZATION OF THE BREWER COMPANY

Brewer

= DENOTES CRITICAL FEATURES
TOLERANCE UNLESS SPECIFIED (COMM. STK. SIZES EXCLUDED)
FRACT. = ± 1/32
DEC. .XX = ±.01
.XXX = ±.005
ANG. = ±1.0°

MATERIAL			FINISH
SEE ABOVE			SEE ABOVE
DR BY: AHC	DATE: 19-JUN-2015	SHEET: 1 OF 1	NAME: POWER INLET
CHK BY: JAD	DATE: 19-JUN-2015	SCALE: 2:1	
APP'D BY: CBN	DATE: ---	CALC. WT.	SIZE: B · DO NOT SCALE DRAWING · NUMBER: 2102856 · REV: A