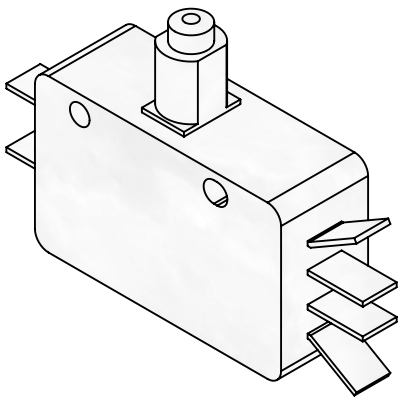

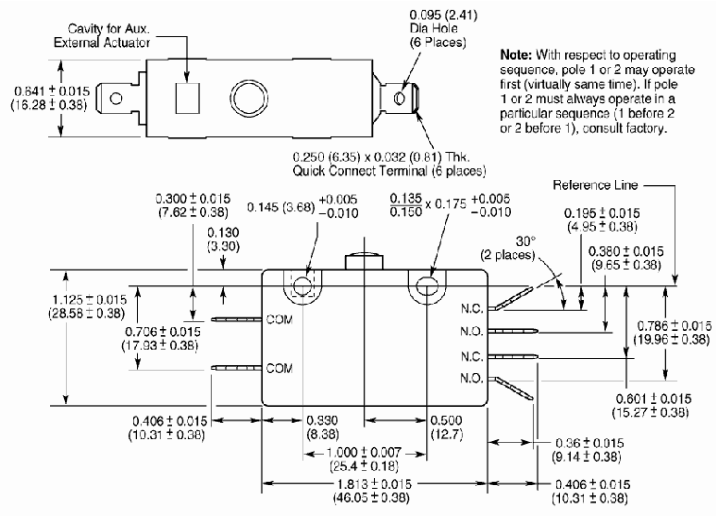

Note: With respect to operating sequence, pole 1 or 2 may operate first (virtually same time). If pole 1 or 2 must always operate in a particular sequence (1 before 2 or 2 before 1), consult factory.

FEATURES

- 5 current ratings
- Choice of actuator styles
- 3 terminal types (optional screw terminals available — consult factory)
- 3 contact arrangements
- Long-life coil spring mechanism
- High-temperature 150°C and 200°C available on select models (consult factory)
- Includes E19, E19A, E20, E25, E28 and G20 Series.

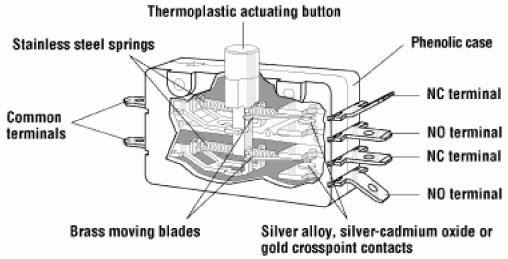

APPROVED VENDORS	
VENDOR	PART NUMBER
CHERRY CORP.	E19-00J
DIGI-KEY	CH322-ND

ELECTRICAL RATINGS

Switch Series	EN61058 Rating	UL1054 Rating	Electrical Life at Rated Load	
			According to VDE (Min. Operations)	According to UL (Min. Operations)
E19	N/A	15A, 125/250VAC; 3/4HP, 125VAC 1-1/2HP, 250VAC	N/A	6,000*

SPECIFICATIONS

Electrical	
Temperature Rating:	105°C Std. (150°C and 200°C optional — E13, E14 or G13 only) 85°C Std. (E28 and E29), 85°C Std. (150°C optional) E25
Flammability Rating:	UL94HB
Materials	
Case:	General Purpose Phenolic
Actuating Button:	Thermoplastic Nylon
Common Terminals:	Brass (E19, E19A, G20) Silver-Plated Brass (E20, E25, E28)
NO and NC Terminals:	Brass (E19, E19A, G20) Copper (E20, E25, E28)
Moving Blade:	Brass (E19, E19A, G20) Silver-Plated Beryllium Copper (E20, E25, E28)
Spring:	Stainless Steel
Auxiliary Actuators:	Cold-Rolled Steel (Nickel-Plated)
Roller:	Sintered Stainless Steel
Contacts:	Silver-Cadmium Oxide (E19, E20, E25, E28) Silver Alloy (E19A) Gold Crosspoint (E19A, G20)

NOTES:

1. THIS ITEM IS "UNDER REGULATORY CONTROL"
2. REGULATORY DOCUMENTION REQUIREMENTS AS PER DS-1160.

REV.	BY	DATE	ECN NO.	DESCRIPTION
C	GHB	1-MAR-2019	ER18-021	ADD "M" MERGE ITEM
B	GHB	9/4/2008	D5635	REMOVED UL FILE REFERENCE; ADDED VENDOR PART NUMBERS
A	MFH	7/27/2006	D5313	RELEASE FOR PRODUCTION

REVISIONS

MATERIAL: SEE ABOVE

FINISH: SEE ABOVE

THE BREWER COMPANY
13901 MAIN STREET
MENOMONEE FALLS, WISCONSIN 53051

THIS PRINT SHOULD NOT BE REPRODUCED OR DISTRIBUTED WITHOUT THE AUTHORIZATION OF THE BREWER COMPANY

Brewer more possibilities

TOLERANCE UNLESS SPECIFIED (COM. STK. SIZES EXCLUDED)
FRAC. = ± .1/32
DEC. .X = ±0.1 ±[2.5]
.XX = ±0.01 ±[0.25]
.XXX = ±0.005 ±[0.13]
ANG. = ±1.0°

DR BY	DATE	SHEET
MFH	5/25/06	1 OF 1
CHK BY	DATE	SCALE
---	---	1:1
APP'D BY	DATE	CALC. WT.
---	---	0.050

NAME: SWITCH, CHERRY E19-00J

SIZE	DO NOT SCALE DRAWING	NUMBER	REV
A		99868M	C