Skipping Bounds and Bounty Program 2026

Dmitry Khovratovich

Ethereum Foundation

March 17, 2026

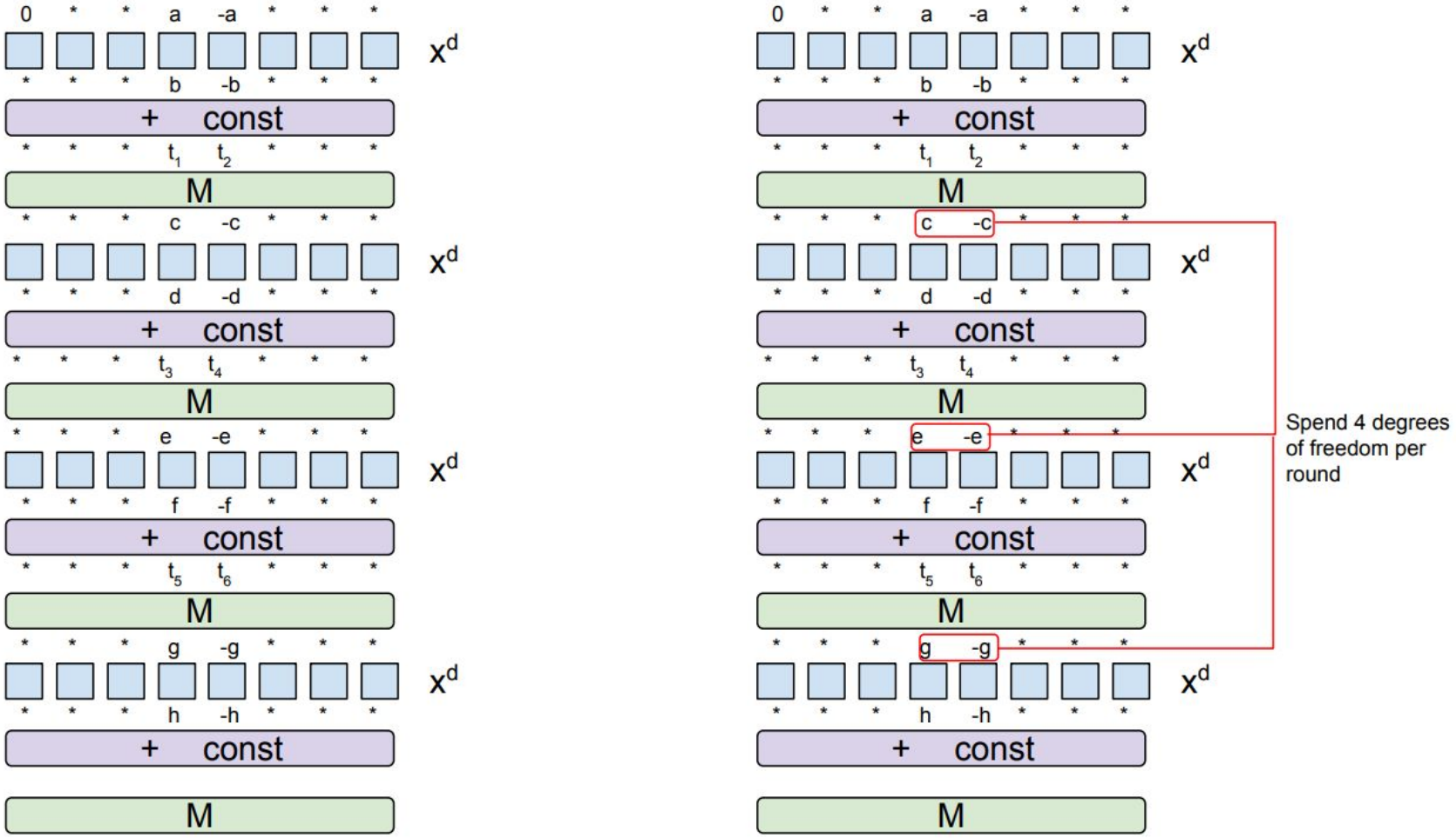

By spending 4 degrees of freedom per round, the attack can skip $\approx t/4$ full rounds of Poseidon2, effectively reducing the security margin by 4 rounds.

Non-ideal diffusion exploited

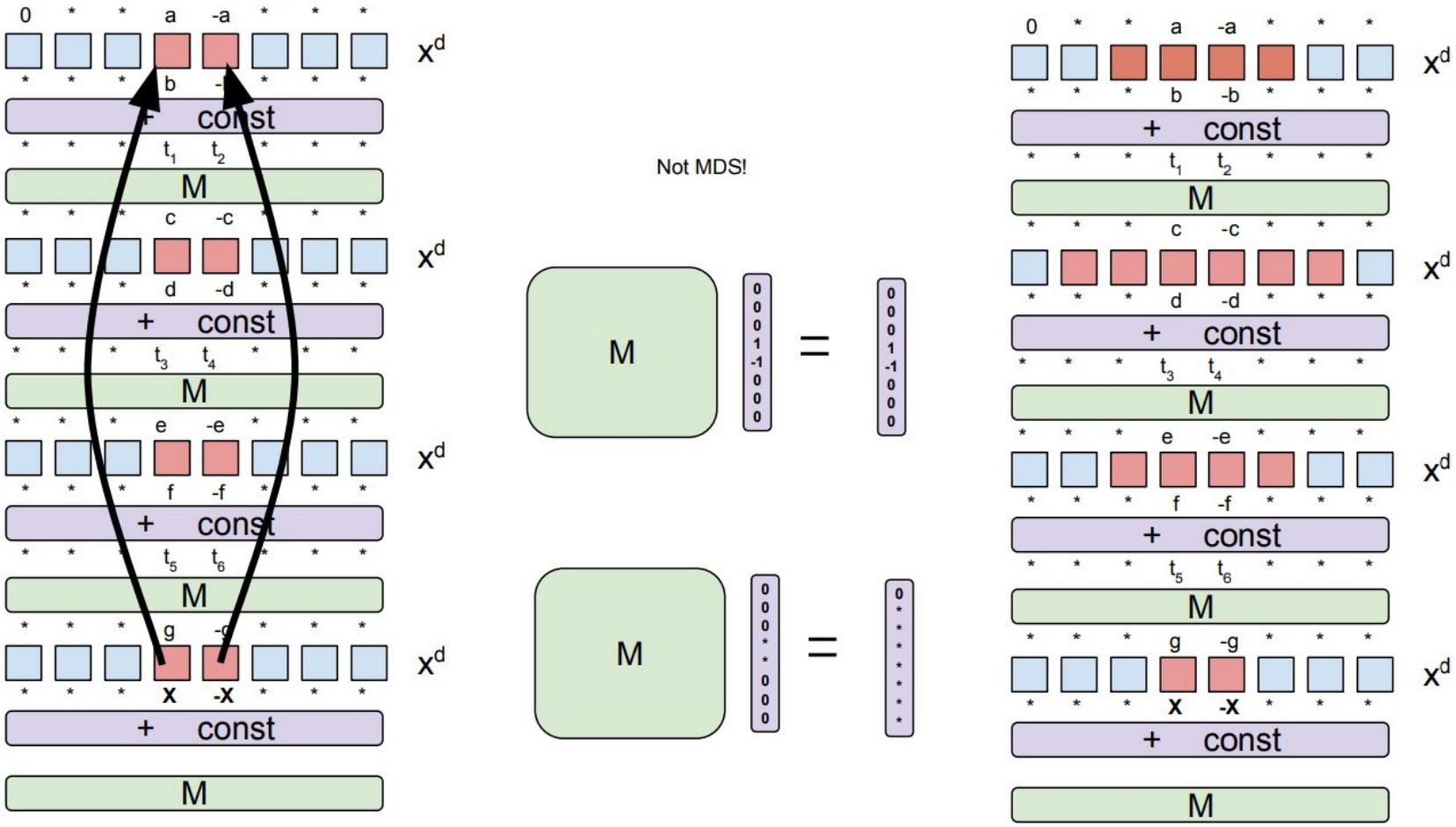

The attack exploits the specific structure of the linear layer with a certain high-probability truncated differential.

Upper bounds on the round number skipped

We show that all round skipping attacks reduce to two conditions:

- Existence of a truncated differential trail with few active S-boxes.
- Existence of a sequence of states satisfying certain algebraic conditions (proportional to the number of active S-boxes).

Theorem

(Informal) A trail skipping m rounds of an SPN structure with t state elements and branch number b must satisfy the following conditions:

$$b \leq \frac{4t}{m}, \text{ for } m \text{ even} \qquad\qquad b \leq \frac{4t-2}{m-1}, \text{ for } m \text{ odd}$$

Proposition

If the linear transformation is MDS, then a 4-round skipping trail cannot exist.

Remark

Four rounds of an MDS-based SPN structure can potentially be skipped if the differential for the first round is relaxed.

Bounty program 2026

Bounty program consists of the following parts:

- CICO problem for round-reduced Poseidon1-KoalaBear;
- Density challenge (break as many rounds as possible);
- Zero-test challenge (break as many rounds as possible);
- Multi-target collision challenge (break as many rounds as possible);
- Ultimate prize: Partial Poseidon1 collisions. Collide on as many field elements as possible.

Density challenge

Parameters:

- **Attacked primitive:** hash function $H : \mathbb{F}_p^* \mapsto \mathbb{F}_p^\ell$.
- **Parameters:** $d, r, t \in \mathbb{Z}^+$ with condition $t \leq k\ell$.
- **Decoding function:** $\mathrm{Decode}_{p,d} : \mathbb{F}_p \mapsto \mathbb{Z}_r^t$.

Challenge: find $S \in \mathbb{F}^r$ such that

$$\#\{i : S[i] = 0\} \leq d \tag{1}$$

$$(a_0, a_1, \ldots, a_{\ell-1}) := H(S) \tag{2}$$

$$(i_0, i_1, \ldots, i_{k\ell-1}) := \mathrm{Decode}(a_0)||\mathrm{Decode}(a_1)|| \cdots ||\mathrm{Decode}(a_{\ell-1}) \tag{3}$$

$$S[i_j] = 0,\ j \in [t] \tag{4}$$

- **Attacked primitive:** hash function $H : \mathbb{F}_p^* \mapsto \mathbb{F}_p^\ell$.
- **Parameters:** $d, r, t \in \mathbb{Z}^+$ with condition $t \leq \ell$.

Challenge: find multivariate polynomial $P : (\mathbb{F}^r)^t \mapsto \mathbb{F}^r$ defined over the extension field $\mathbb{F}^r$ such that

$$1 \leq \mathrm{degree}(P) \leq d \tag{5}$$

$$(a_0, a_1, \ldots, a_{\ell-1}) := H(\widehat{P}) \tag{6}$$

$$P(a_0, a_1, \ldots, a_{t-1}) = \mathbf{0} \in \mathbb{F}^r \tag{7}$$

where $\widehat{P}$ is the vector of the coefficients of P expressed as elements of the base field $\mathbb{F}$. The length of $\widehat{P}$ in the base field units is then $(d+1)r$.

Partial collision challenge

- **Attacked primitive:** hash function $H : \mathbb{F}_p^* \mapsto \mathbb{F}_p^\ell$.
- **Parameters:** $t \in \mathbb{Z}^+$ with condition $t \leq \ell$.
  Challenge: find $x \neq y \in \mathbb{F}^r$ such that

$$(a_0, a_1, \ldots, a_{\ell-1}) := H(x) \tag{8}$$

$$(b_0, b_1, \ldots, b_{\ell-1}) := H(y) \tag{9}$$

$$a_i = b_i, \; i = 0, 1, \ldots, t-1. \tag{10}$$