Skipping Bounds and Bounty Program 2026

Dmitry Khovratovich

Ethereum Foundation

March 20, 2026

Round skipping: new hope

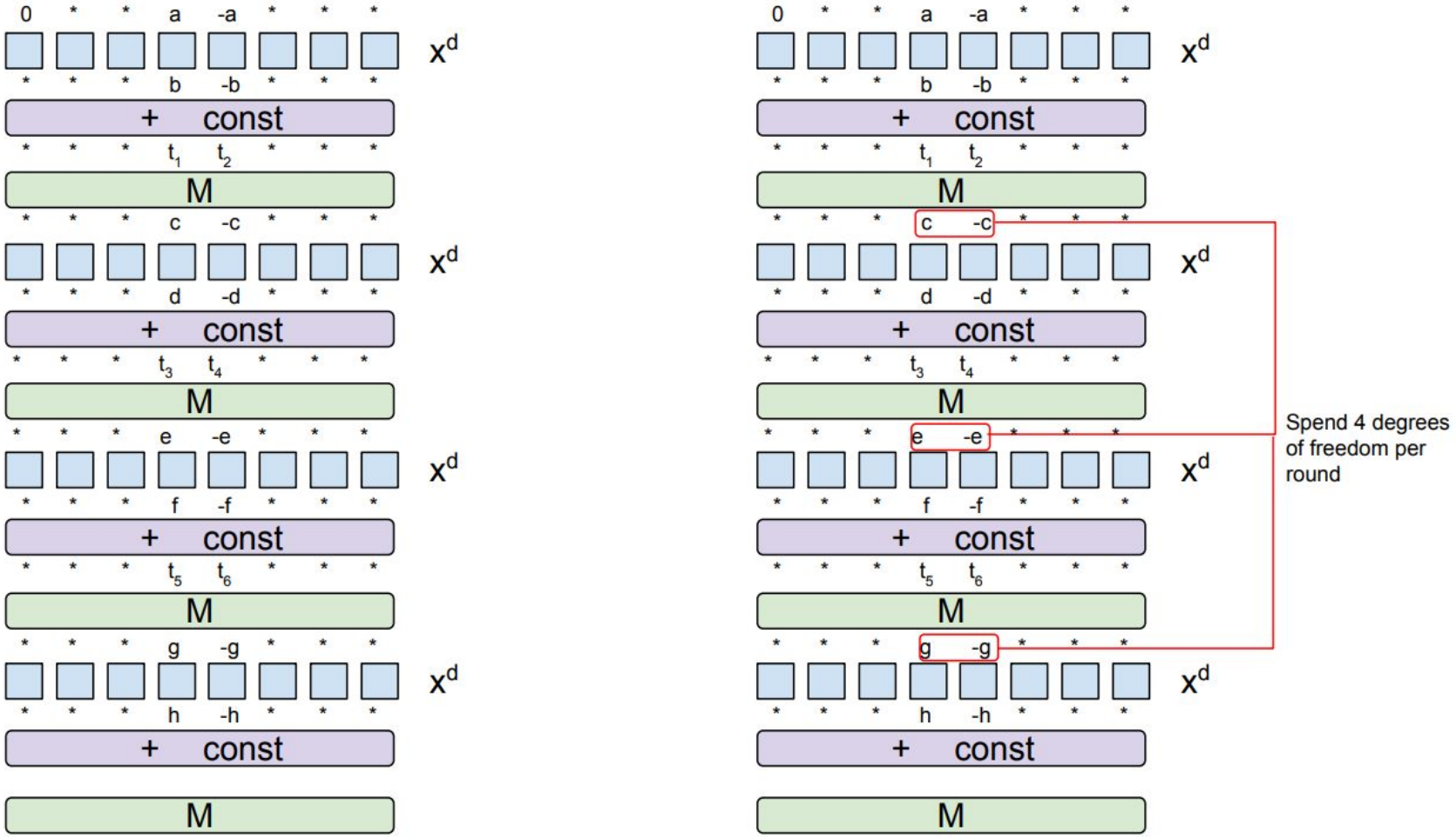

By spending 4 degrees of freedom per round, the attack can skip $\approx t/4$ full rounds of Poseidon2, effectively reducing the security margin by 4 rounds.

Non-ideal diffusion exploited

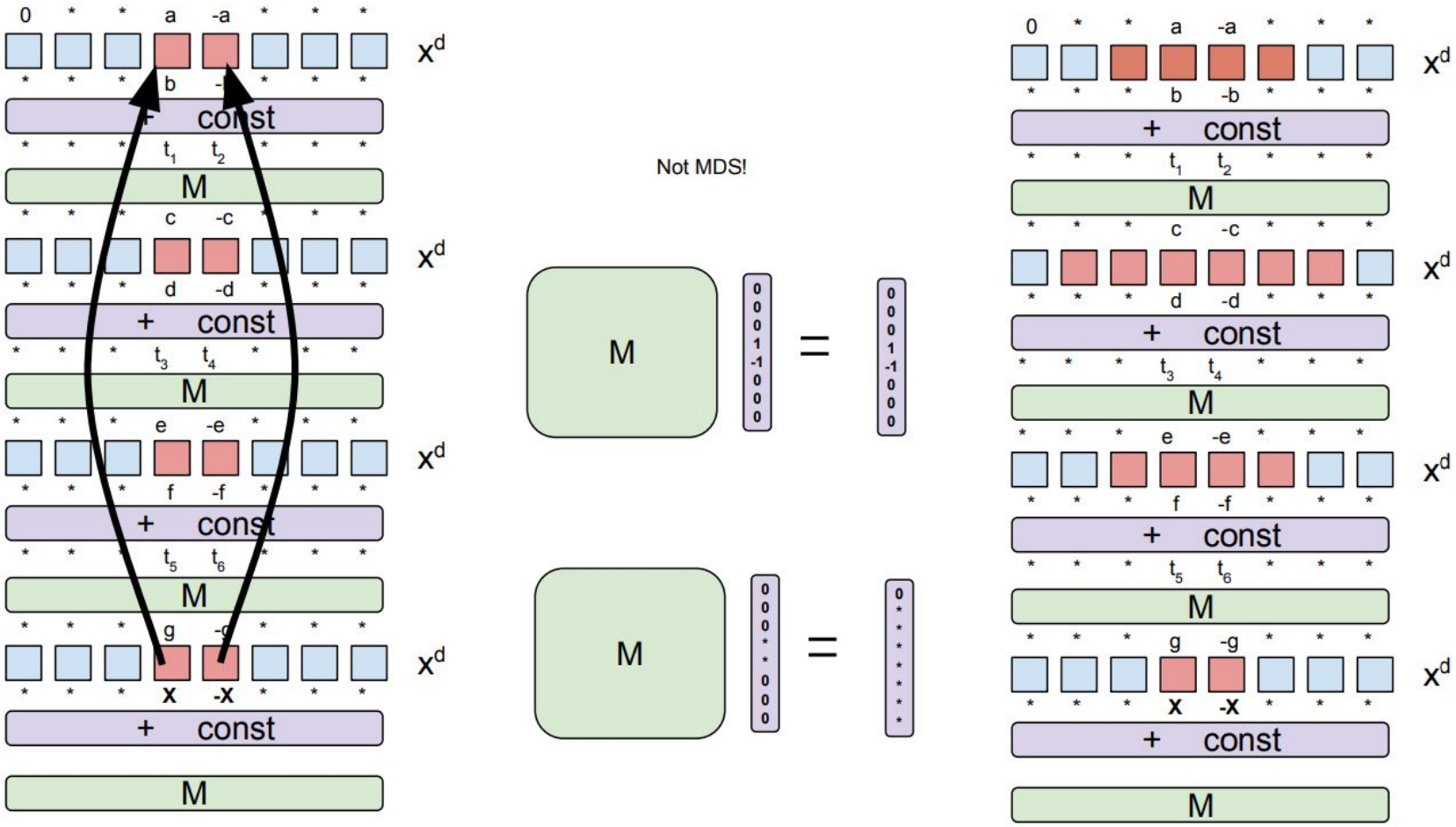

The attack exploits the specific structure of the linear layer with a certain high-probability truncated differential.

Upper bounds on the round number skipped

Ongoing research: we show that all round skipping attacks reduce to two conditions:

- Existence of a truncated differential trail with few active S-boxes, and of a regular differential trail with at least that many S-boxes.
- Existence of a sequence of states satisfying certain algebraic conditions (proportional to the number of active S-boxes).

Parallels to the rebound attack on AES.

Theorem

(Informal) A trail skipping m rounds of an SPN structure with t state elements and branch number b must satisfy the following conditions:

$$b \leq \frac{4t}{m}, \text{ for } m \text{ even} \qquad\qquad b \leq \frac{4t-2}{m-1}, \text{ for } m \text{ odd}$$

Proposition

If the linear transformation is MDS, then a 4-round skipping trail cannot exist.

Remark

3-round skipping trails for MDS-based SPN structures are yet to be discovered, but we can upper bound the dimension of the solution space already now.

Bounty program and prizes

Bounty program 2026

Bounty program will consist of the following parts:

- CICO problem for round-reduced Poseidon1-KoalaBear;
- Density challenge (break as many rounds as possible);
- Zero-test challenge (break as many rounds as possible);
- Multi-target collision challenge (break as many rounds as possible);
- ULTIMATE PRIZE: Partial Poseidon1 collisions. Collide on as many output field elements as possible.

Concrete instances of the challenges will be published Tuesday March 24th at `https://poseidon-initiative.info`. They will have a short seed to prefix all hash inputs (!).

Density challenge

Parameters:

- **Attacked primitive:** hash function $H : \mathbb{F}_p^* \mapsto \mathbb{F}_p^\ell$.
- **Parameters:** $d, r, t \in \mathbb{Z}^+$ with condition $t \leq k\ell$.
- **Decoding function:** $\mathrm{Decode}_{p,d} : \mathbb{F}_p \mapsto \mathbb{Z}_r^t$.

Challenge: find $S \in \mathbb{F}^r$ such that

$$\#\{i : S[i] = 0\} \leq d \tag{1}$$

$$(a_0, a_1, \ldots, a_{\ell-1}) := H(S) \tag{2}$$

$$(i_0, i_1, \ldots, i_{k\ell-1}) := \mathrm{Decode}(a_0)||\mathrm{Decode}(a_1)|| \cdots ||\mathrm{Decode}(a_{\ell-1}) \tag{3}$$

$$S[i_j] = 0,\ j \in [t] \tag{4}$$

- **Attacked primitive:** hash function $H : \mathbb{F}_p^* \mapsto \mathbb{F}_p^\ell$.
- **Parameters:** $d, r, t \in \mathbb{Z}^+$ with condition $t \leq \ell$.

Challenge: find multivariate polynomial $P : (\mathbb{F}^r)^t \mapsto \mathbb{F}^r$ defined over the extension field $\mathbb{F}^r$ such that

$$1 \leq \mathrm{degree}(P) \leq d \tag{5}$$

$$(a_0, a_1, \ldots, a_{\ell-1}) := H(\widehat{P}) \tag{6}$$

$$P(a_0, a_1, \ldots, a_{t-1}) = \mathbf{0} \in \mathbb{F}^r \tag{7}$$

where $\widehat{P}$ is the vector of the coefficients of P expressed as elements of the base field $\mathbb{F}$. The length of $\widehat{P}$ in the base field units is then $(d+1)r$.

Partial collision challenge

- **Attacked primitive:** hash function $H : \mathbb{F}_p^* \mapsto \mathbb{F}_p^\ell$.
- **Parameters:** $t \in \mathbb{Z}^+$ with condition $t \leq \ell$.
  Challenge: find $x \neq y \in \mathbb{F}^r$ such that

$$(a_0, a_1, \ldots, a_{\ell-1}) := H(x) \tag{8}$$

$$(b_0, b_1, \ldots, b_{\ell-1}) := H(y) \tag{9}$$

$$a_i = b_i, \; i = 0, 1, \ldots, t-1. \tag{10}$$

- **Ultimate prize:** Collision on t field elements, the total prize fund is close to \$1M.

Questions?