Latest updates: https://dl.acm.org/doi/10.1145/3628797.3628938

RESEARCH-ARTICLE

MCLDA: Multi-level Contrastive Learning for Domain Adaptive Semantic Segmentation

NGO-KIEN DUONG, Hanoi University of Science and Technology, Hanoi, Vietnam

THI-OANH NGUYEN, Hanoi University of Science and Technology, Hanoi, Vietnam

VIET-SANG DINH, Hanoi University of Science and Technology, Hanoi, Vietnam

Open Access Support provided by:

Hanoi University of Science and Technology

PDF Download
3628797.3628938.pdf
02 April 2026
Total Citations: 1
Total Downloads: 180

Published: 07 December 2023

Citation in BibTeX format

SOICT 2023: The 12th International Symposium on Information and Communication Technology
December 7 - 8, 2023
Ho Chi Minh, Vietnam

MCLDA: Multi-level Contrastive Learning for Domain Adaptive Semantic Segmentation

Ngo-Kien Duong
BKAI Research Center
Hanoi University of Science and Technology
Hanoi, Vietnam
kien.dn194307@sis.hust.edu.vn

Viet-Sang Dinh
BKAI Research Center
Hanoi University of Science and Technology
Hanoi, Vietnam
sang.dinhviet@hust.edu.vn

Thi-Oanh Nguyen*
BKAI Research Center
Hanoi University of Science and Technology
Hanoi, Vietnam
oanh.nguyenthi@hust.edu.vn

ABSTRACT

In this paper, we present a domain adaptation method for semantic segmentation in the context of autonomous vehicles. Our method builds upon a self-training approach with teacher-student architecture and integrates multi-level contrastive learning mechanisms. More specifically, we apply the contrastive learning at two levels: feature level and output level, which encourages pixel representations of the same category to cluster together while promoting dispersion between different categories. Additionally, we adapt a mixing technique to address the imbalance problem of dataset. The central concept involves the iterative copying of pixels from common classes in source images and pasting them into target images based on their occurrence frequency. The experiments on the widely used GTA5 → Cityscapes and SYNTHIA → Cityscapes benchmarks yield mIoU scores of 56.76% and 50.0%, respectively. These scores are comparable with the best methods using the same segmentation architecture Deeplabv2 (ResNet101). It is worth noting that our approach performs notably well in difficult classes such as "truck" and "bus" with respective scores of 56.7% and 57.0%. This further underscores the effectiveness of our proposal.

CCS CONCEPTS

• **Computer systems organization → Neural networks**; • **Computing methodologies → Regularization**; **Image segmentation**; **Neural networks**; • **Theory of computation → Semi-supervised learning**.

KEYWORDS

Unsupervised Domain Adaptation, Multi-level Contrastive Learning, Self-learning

ACM Reference Format:
Ngo-Kien Duong, Viet-Sang Dinh, and Thi-Oanh Nguyen. 2023. MCLDA: Multi-level Contrastive Learning for Domain Adaptive Semantic Segmentation. In *The 12th International Symposium on Information and Communication Technology (SOICT 2023), December 07–08, 2023, Ho Chi Minh, Vietnam.* ACM, New York, NY, USA, 8 pages. https://doi.org/10.1145/3628797.3628938

*Corresponding author.

Permission to make digital or hard copies of all or part of this work for personal or classroom use is granted without fee provided that copies are not made or distributed for profit or commercial advantage and that copies bear this notice and the full citation on the first page. Copyrights for components of this work owned by others than the author(s) must be honored. Abstracting with credit is permitted. To copy otherwise, or republish, to post on servers or to redistribute to lists, requires prior specific permission and/or a fee. Request permissions from permissions@acm.org.
SOICT 2023, December 07–08, 2023, Ho Chi Minh, Vietnam
© 2023 Copyright held by the owner/author(s). Publication rights licensed to ACM.
ACM ISBN 979-8-4007-0891-6/23/12…$15.00
https://doi.org/10.1145/3628797.3628938

1 INTRODUCTION

Recent years have witnessed remarkable advancements in the performance of neural networks across various computer vision tasks. Nonetheless, they demand a substantial volume of annotated data for effective training. In the case of semantic segmentation, the cost of annotations is notably high, as each pixel necessitates labeling. Unsupervised domain adaptation (UDA) emerges as a solution to this challenge, aiming to adapt a network trained on source (synthetic) data to target (real) data without relying on target labels.

In our research, we introduce an end-to-end framework known as MCLDA, designed for domain adaptive semantic segmentation. Specifically, we extend upon a self-training [9] approach and incorporate multi-level contrastive learning mechanisms. The approach involves using global category prototypes calculated initially from the source domain to guide the alignment between the source and target domains. In the training process, it is important to update prototypes with input from both source and target features. By the way, these prototypes serve as a metaphorical "bridge" connecting the source and target domains. Additionally, we introduce a multi-level contrastive learning loss, specifically designed to achieve explicit domain alignment and enhance the distinguishability of features.

Datasets frequently exhibit imbalances, often following a long-tail distribution, which tends to bias models towards more common classes. A straightforward approach to address this issue is to augment the representation of pixels belonging to rare classes. In line with this, we introduce a novel Copy-Paste resampling strategy. The core idea behind this strategy is to iteratively copy pixels from underrepresented classes in source images and insert them into target images.

In summary, our contributions can be outlined as follows:

- We present a multi-level contrastive learning method for domain adaptive semantic segmentation, which explicitly focuses on domain alignment and improves the discriminability of features.
- We introduce an image mixing strategy to handle imbalanced data and take the class context into account. This technique uses class frequency to determine the class regions selected for creating mixed images that exhibit a balanced class distribution.

The rest of the paper is organized as follows. Section II provides an overview of related works. In Section III, we provide a detailed

description of the proposed method. Section IV presents experimental results and discussions, and finally, in Section V, we conclude the paper.

2 RELATED WORKS

2.1 Unsupervised Domain Adaptation (UDA)

Unsupervised Domain Adaptation (UDA), a relatively new area of machine learning, emerged as a result of the increasing amount of data and the limited and expensive resources needed for annotation. Any labels for the target domain data are completely absent in unsupervised domain adaptation. Early UDA methods[2, 10] generate a domain invariant feature representation by utilizing the neural network's early layers. Adversarial learning makes it simple to do this by reducing the difference in domains between the two domains. Other UDA techniques [1, 14] concentrate on transferring the source's style across to the target domain. These methods try to reduce the domain gap between the source and target domains by translating the source images to mimic images from the target domain. Recently, the UDA problem was attempted to be seen as a semi-supervised work due to the success of semi-supervised learning research [3, 9, 17, 19].

2.2 Self-training in UDA

Self-training is a strategy to incrementally grow a set of labeled examples by training a classifier using existing labeled instances and then using the trained classifier to predict pseudo-labels for unlabeled instances, and using them to iteratively fine-tune the model. Early approaches [10, 19, 20] were mostly offline iterative processes. As a result, these techniques frequently involve several levels of training and are quite time-consuming. Recently, some works [3, 9] using the online pseudo-label technique because of its less difficult setup with one-stage training. For example, DACS [9] suggests creating a mixed domain by copying picture patches from the source domain to the target domain and using a teacher model to teach a student model. Some works [6, 7, 16], combine online and offline pseudo-label techniques.

2.3 Contrastive Learning

Contrastive representation learning aims to develop an embedding space where similar sample pairs remain nearby while dissimilar sample pairs are spread away. In some recent efforts [4, 12, 18], UDA semantic segmentation incorporates contrastive learning to distinguish different class features in the feature space while aligning the same class features. SPCL [12] provides a unique framework for contrastive learning based on semantic prototypes to align pixels and prototypes. Unlike previous works, our MCLDA computes confident prototypes from source and target images and performs contrastive learning on perturbation images (mixed images).

2.4 Mixing

Both classification and semantic segmentation have been effectively accomplished using the type of augmentation approach known as mixing. Pixels from two training images are combined to create a new, significantly disturbed sample. A popular method is to use a set of pixels from one image and a different set from a different image. In the binary mixing technique CutMix [15], random rectangular areas are cut off from one image and put into another. The ClassMix algorithm [8] takes half of the predicted classes for a given image and pastes the associated pixels onto a second image to create a significantly affected image where the semantic bounds of objects are always closely followed.

3 METHODOLOGY

3.1 Problem Definition

We consider the problem of unsupervised domain adaptation (UDA) for semantic segmentation. Assume that there are two datasets: a source dataset with full annotation $D_S = \{(x_s, y_s)_{s=1}^{n_S}\}$ and an unlabeled target dataset $D_T = \{(x_t)_{t=1}^{n_T}\}$, where $x_s, x_t \in \mathbb{R}^{H\times W\times 3}$ are images from source and target domain respectively; y_s is the corresponding label of x_s; n_s, n_t are the number of samples in each dataset. These datasets share the same category set C. The objective is to train a semantic segmentation model M with D_S and D_T so that M can accurately predict the class of each pixel in the target domain image. The model $M = G \circ E$ is considered as a combination of a feature extractor E and a classifier G.

3.2 Overall Architecture

In order to build a one-stage framework for domain adaptive segmentation, our proposal is based on teacher-student architecture. In this setup, our framework consists of a student network M and a teacher network M'. The weights of student network's M are learned from the source dataset with true labels and the target dataset with pseudo-labels that are generated by the teacher network. A cross-entropy loss is used to supervise the student model. During training, the teacher model's weights are updated as an exponential moving average of the student's weights, which makes models more stable and pseudo labels less noisy. To help the network better deal with the domain gap while training the network, Tranheden et al. [9] proposed the cross-domain mixing method with ClassMix. This method provides quite promising results. However, the data characteristics are not taken into account. Hence, we would like this idea as a baseline to develop our method.

In the context of autonomous vehicles, the captured images contain many objects/classes. But some of them appear more frequently and occupy a larger region than others. That leads to an imbalance in the training data sets, and makes it difficult for the model to learn representative features of classes. Therefore, our work aims to improve these issues. The overall architecture of our proposed method is shown in Fig. 1. First, to address class imbalance issues, we adjust the image mixing technique based on the frequency of class occurrences and consider the context when blending images. Pixels for rare classes in the source images are more frequently copied into the target images to create mixed images x_m. Both augmentation methods, ClassMix and CutMix, are studied in our work. Second, we propose to integrate multi-level contrastive learning mechanisms in order to explicitly address domain alignment, which is typically overlooked in the self-training approach, and to improve the distinguishability of class features. Specifically, we embed extracted features from model M into a latent space (via projection head H), and then conduct contrastive loss to maximize the similarity between features and the prototype belonging to the

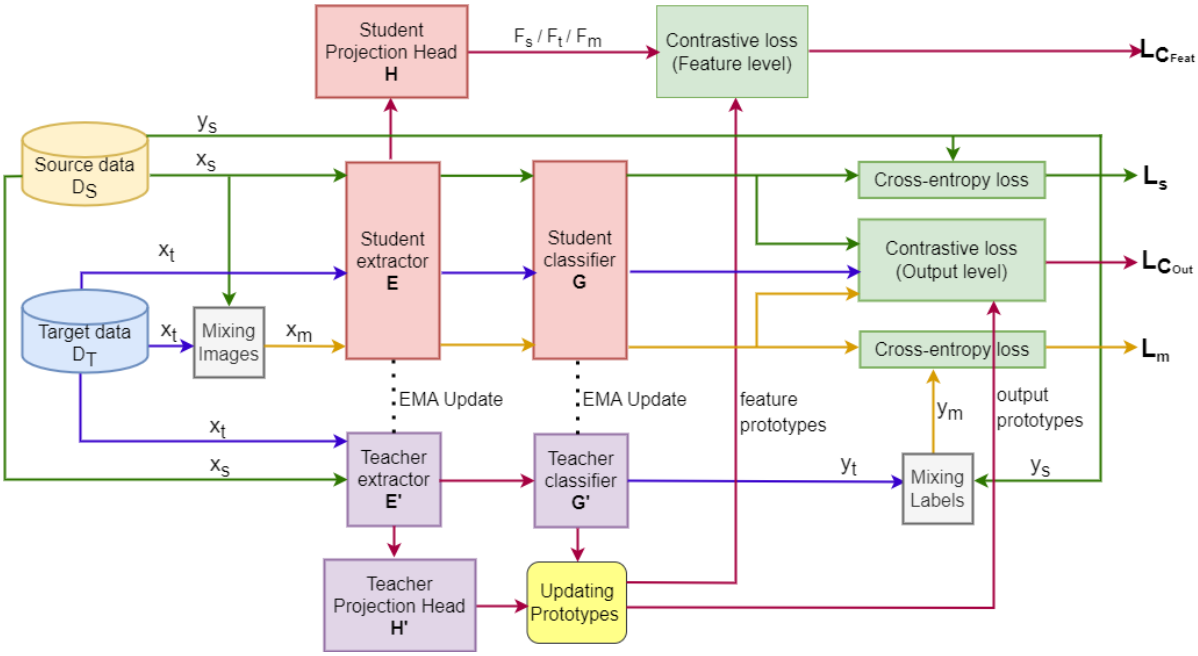

Figure 1: Architecture of the proposed method.

same category. This is executed at the feature level, and we would like to get a similar effect at the output level. Thus, we perform contrastive learning in the label space by utilizing the outputs of the classifier. To update the prototypes effectively, we leverage the embedding features acquired from both source and target images via the teacher projection head H'.

3.3 Mixing Strategies

Data of the semantic segmentation problem for autonomous vehicles often exhibit notable class imbalance, where certain classes like "traffic light" and "traffic sign" have very few pixels, while others like "motorcycle" and "train" are scarcely represented in the dataset. This imbalance poses a significant challenge when training segmentation models, especially for long-tailed classes. We introduced a strategy for image mixing to address this issue and to better align the two domains. The main idea is to deliberately select pixels/regions in source images to copy into target images instead of random selection as in [9].

Class-balance Sampling. A simple technique for handling imbalance problems is oversampling on rare classes. Hence, while creating mixed images, we select more pixels/regions of classes with a low frequency to paste into a target image. The sampling probability $P(c)$ of class c is estimated from its frequency f_c in training set as [3]:

$$P(c) = \frac{\exp^{(1-f_c)/T}}{\sum_{c'=1}^{C} \exp^{(1-f'_c)/T}} \tag{1}$$

Rare classes Mixing. There are different methods for mixing two images, including ClassMix [8] and CutMix [15]. We try to investigate these two methods for creating source-target images while considering the sampling probability of each class. ClassMix is used in the baseline model DACS [9]. However, with this technique, the pixels of one class from the source image are independently copied to the target image. Thus, the context surrounding that class in the source image is not mixed into that target image. That is why we choose CutMix as an alternative method to capture contextual information of the source domain to the target domain. Therefore, these two mixing strategies: **RClassMix** and **RCutMix** are considered.

- **RClassMix**: we choose half of the classes in a source image based on their sampling probability $P(c)$. The pixels of the selected classes are then copied from the source image and pasted onto the target image.
- **RCutMix**: we randomly choose a source image containing class c selected by the sampling probability $P(c)$, and subsequently cut a suitable region from the source image to paste into the target image. A suitable region is one that contains more than 50% pixels of selected class c in the source image.

3.4 Multi-level Contrastive Learning

Traditional self-training techniques [9, 10, 19] have an important weakness: the majority of them ignore explicit domain alignment. As a result, pixel features from distinct domains but belonging to the same class can be pushed far apart in the feature space, which can make it difficult to learn a good feature representation even with perfect pseudo-labels. In addition, the target domain features are not sufficiently discriminative since there are no explicit supervision signals in the target domain data. Previous works prove that contrastive learning can increase the distinguishability of unlabeled data [12, 13], so we can use it to handle these problems. The idea is to use global category prototypes effectively to guide the alignment

between source and target domains [4]. We create a multi-level contrastive loss in particular to explicit domain alignment and enhance feature distinguishability.

Prototypes Initialization. The initialized class-aware prototypes can be computed as class centers in the source domain.

$$p_c^{feat} = \frac{\sum_{i=1}^{n_S} \sum_{j=1}^{H\times W} F'^{(i,j)}_s [y_s^{(i,j)} = c]}{\sum_{i=1}^{n_S} \sum_{j=1}^{H\times W} [y_s^{(i,j)} = c]} \tag{2}$$

where source feature $F'^{(i,j)}_s$ from the teacher model of pixel $y_s^{(i,j)}$.

Contrast Adaptation. The hidden-layer features $F_s, F_t \in \mathbb{R}^{H'\times W'\times A}$, their predictions $p_s, p_t \in \mathbb{R}^{H'\times W'\times C}$ are generated from the student network. The objective is to enforce the requirement that pixels within the same category must have a high degree of similarity in representation space. Pixels from the same class must be close to their corresponding prototype but away from the others. Hence, we employ the contrastive loss at feature-level L_s on data from the source domain.

$$L^{(i)}_{s\to p} = -\sum_{j=1}^{H\times W} \sum_{c=1}^{C} y_s \log P^{(i,j,c)}_{s\to p} \tag{3}$$

where y_s is the label of the source sample, $P^{(i,j)}_{s\to p}$ the similarity its feature and prototypes:

$$P^{(i,j,c)}_{s\to p} = \frac{\exp(p_c^{feat} \cdot F_s^{(i,j)}/\tau)}{\sum_{c'=1}^{C} \exp(p_{c'}^{feat} \cdot F_s^{(i,j)}/\tau)} \tag{4}$$

In order to perform domain alignment, we also need to apply contrastive learning on the target images and also on the mixed images. For all samples from the target domain, we need to use pseudo-labels due to the lack of true labels to compute contrastive loss. We suggest two ways to estimate the contrastive loss L_t. The first way is to use only pseudo-labels with high confidence scores, while the second way is to use all pseudo-labels weighted by learning quality.

CL with high confident pseudo-labels: Equation 5 represents the contrastive loss estimated on the target image i using only high-confident pseudo-labels.

$$L^{(i)}_{t\to p} = -\sum_{j=1}^{H\times W} \sum_{c=1}^{C} \tilde{y}_t \log P^{(i,j,c)}_{t\to p} \tag{5}$$

where

$$\tilde{y}_t^{(i,j,c)} = \begin{cases} 1 & \text{, if } c = \arg\max_{c'} p'^{(i,j,c')}_T \text{ and } p'^{(i,j,c')}_T \geq \gamma \\ 0 & \text{, otherwise} \end{cases} \tag{6}$$

CL with all pseudo-labels weighted by learning quality: When using all pseudo-labels to calculate the contrastive loss, it can be heavily influenced by low-quality pseudo-labels, especially at the beginning of the training process. Therefore, to gradually adapt during the learning process, we adjust the loss function based on the weight representing the learning quality q of the model (Eq. 8). q is chosen as suggested in [9], which is the proportion of pixels for each image, where the predictions of pixels on that image have a confidence above a certain threshold α. In the beginning, q is usually small and increases slowly when the model becomes better.

$$L^{(i)}_{t\to p} = -\sum_{j=1}^{H\times W} \sum_{c=1}^{C} q_T^{(i)} \hat{y}_t \log P^{(i,j,c)}_{t\to p} \tag{7}$$

Mixed images contain information from both the source and target domains, which makes them a bridge between the two datasets. Therefore, performing the contrastive loss on mixed images can improve domain alignment. Different from previous works [4, 12] we apply contrastive learning on mixed images. The contrastive loss $L^{(i)}_{m\to p}$ on a mixed image $x_m^{(i)}$ was calculated similarly to the loss on the source and the target images. The final contrastive loss at the feature level is the sum of the losses across the three image types:

$$L_{C_{Feat}} = \sum_{i=1}^{n_s} L^{(i)}_{s\to p} + \sum_{i=1}^{n_t} L^{(i)}_{t\to p} + \sum_{i=1}^{n_m} L^{(i)}_{m\to p} \tag{8}$$

Update Prototypes. During training, prototypes need to be updated. In addition, when initializing prototypes, source features are only involved in computing, so in order to improve the domain-invariant representational capability of prototypes, target features also need to be involved. When updating prototypes, we use only features of pixels on target images with a high confidence score (0.9 in our experiments) to ensure prototypes represent the correct centroids as much as possible. The target prototype $\tilde{p}_c^{feat^t}$ in a batch were estimated as follow:

$$\tilde{p}_c^{feat^t} = \frac{\sum_{i=1}^{\tilde{n}_t} \sum_{j=1}^{H'\times W'} F'^{(i,j)}_t [\tilde{y}_t^{(i,j)} = c]}{\sum_{i=1}^{\tilde{n}_t} \sum_{j=1}^{H'\times W'} [\tilde{y}_t^{(i,j)} = c]} \tag{9}$$

where feature $F'^{(i,j)}$ from the teacher model of pixel $x^{(i,j)}$ and $\tilde{n}_t$ is number of images in a batch. The source prototype $\tilde{p}_c^{feat^s}$ was computed similarly with source labels. To be simple, $\tilde{p}_c^{feat}$ represents the estimated online prototypes for the category c.

There are several ways to update the prototypes. One is to calculate the statistical mean of all data features since the beginning of the training process, as in [4]. The updated formula is shown in Eq.10.

$$p_c^{feat} \longleftarrow \frac{p_c^{feat} n_c^{feat} + \tilde{p}_c^{feat} \tilde{n}_c^{feat}}{n_c^{feat} + \tilde{n}_c^{feat}} \tag{10}$$

where n_c^{feat} represents the total number of pixels in the category c since the last update, $\tilde{n}_c^{feat}$ represents the total number of category c pixels in the current mini-batch. However, using all the features, including features extracted in the early stages of the training process, may have a negative impact on the estimation of prototypes. Therefore, we propose to estimate the prototypes by the moving average of the prototypes in mini-batches as shown in Eq. 11, to track the slowly moving prototypes [12, 17].

$$p_c^{feat} \longleftarrow m p_c^{feat} + (1-m)\tilde{p}_c^{feat} \tag{11}$$

where m is a hyper-parameter, which specifies an ongoing update rate during the training process.

Label Space Adaptation. Reducing the gap between features and classifiers can help improve the model performance [4, 5], and one way to achieve this is by applying contrastive learning at the output level. Therefore, in our framework, contrastive learning is

also applied to the label space. The loss is similar to the loss in the feature space, but prediction probabilities are considered instead of feature vectors. Apart from this, prototype initialization, contrast adaptation, and update prototypes are the same. The overall loss for contrast adaptation is then the sum of losses at the feature level and output level (Eq. 12).

$$L_C = L_{C_{Feat}} + L_{C_{Out}} \tag{12}$$

3.5 Training Objectives

Finally, our overall training loss L (see Eq.13) composes of segmentation losses on the source domain $L_s^{(i)}$ and on the mixed domain $L_m^{(i)}$, and multi-level contrastive loss L_C. The segmentation loss on a given source image x_s and its true label y_s, and on the mixed image x_m are shown in Eq.14 and Eq.15 respectively, where p_s and p_m are prediction probability on x_s x_m; q_m is the proportion of pixels having the probability exceeds certain threshold.

$$L = L_s + L_m + L_C \tag{13}$$

$$L_s^{(i)} = -\sum_{j=1}^{H\times W}\sum_{c=1}^{C} y_s^{(i,j,c)} \log p_s^{(i,j,c)} \tag{14}$$

$$L_m^{(i)} = -\sum_{j=1}^{H\times W}\sum_{c=1}^{C} q_m^{(i,j)} \hat{y}_m^{(i,j,c)} \log p_m^{(i,j,c)} \tag{15}$$

4 EXPERIMENTAL RESULTS

4.1 Datasets

The source domain used for our experiments is either the GTA5 dataset or the SYNTHIA dataset. The GTA5 dataset contains 24,966 synthetic images with a resolution of 1914 x 1052, while the SYNTHIA dataset contains 9,400 synthetic images with a resolution of 1280 x 760. The Cityscapes dataset is used as the target domain and contains 2,975 training images and 500 validation images with a resolution of 2048 x 1024. Cityscapes share 19 common classes with the GTA5 dataset and 16 classes with the SYNTHIA dataset. Following common settings, we resize images to 1280×720 for the GTA dataset and to 1024 × 512 for the Cityscapes dataset before randomly cropping to 512 × 512.

4.2 Implementation Details

Segmentation architecture. In the training phase, we use the DeepLab-v2 framework with ResNet-101 encoder.

Training details. The method is implemented with the PyTorch library on NVIDIA GeForce RTX 4090. We utilize the stochastic gradient descent as our optimizer to train the segmentation network, where the momentum is 0.9 and the weight decay is 10^{-4}. We use polynomial learning rate scheduling with a power of 0.9, with the learning rate initially set to 2.5×10^{-4} for encoder and 2.5×10^{-3} for encoder. We train the network with a batch of two 512×512 random crops for a total of $250k$ iterations. In all experiments, we set α, β, γ, τ and T are 0.968, 0.99, 0.9, 100.0 and 0.1, respectively, following the settings in [3, 4, 9]. Hyperparameter m for updating prototypes was set 0.9999. We perform contrastive learning starting from 3k iteration.

4.3 Ablation Study

For the ablation study, we effect experiments on the scenario of GTA5–> Cityscapes adaptation.

4.3.1 Evaluation of mixing strategies. Table 1 displays our results obtained when we applied different mixing strategies on the baseline DACS. We can find that our **RClassMix** method surpasses DACS by a slight margin (+0.02% mIoU, from 52.32% to 52.34% mIoU). Notably, the performance of the motorcycle and bicycle classes shows substantial improvement (from 14.42% to 28.38% IoU and from 35.79% to 41.12% IoU, respectively). However, popular classes like road and sidewalk experienced a significant decrease compared to DACS (−3.25% mIoU and −8.34% mIoU, respectively). This decline can be attributed to the fact that pixels from these classes are rarely transferred from source to target images. Because our technique selects more pixels from rare classes and assigns an extremely low probability to pixels from popular classes like road and sidewalk, it leads to the limited supervision signals on mixed images.

Moving on to **RCutMix**, Table 1 demonstrates significant improvements in mIoU and IoU of most classes compared to DACS. The rare classes such as sidewalk, rider, train, bicycle, and motorcycle benefit significantly from RCutMix. Notably, the performance of the train class increased by 5.38% IoU, whereas other methods often saw no IoU improvement. Additionally, the motorcycle and bicycle classes exhibit considerable performance gains (from 14.42% to 44.98% IoU and from 35.79% to 57.63% IoU, respectively). RCutMix emphasizes context, which proves advantageous when source and target images have shared semantic contexts, like a rider on a bike or motorcycle or a sidewalk next to a road. However, for classes that must maintain their shape regardless of the surrounding environment, such as terrain and fence, RCutMix may not perform as well.

Combination of RCutMix and RClassMix method. We aim to integrate RCutMix and RClassMix due to their own advantages. Specifically, we randomly select one of these two methods to create mixed source-target images. Table 1 demonstrates a synergistic effect between these two strategies, resulting in improved performance compared to the individual methods (55.03% compared to 54.78% and 52.34% in mIoU). It's worth noting that the combination of RCutMix and RClassMix effectively resolves the issues encountered by the individual methods.

4.3.2 Methods for updating prototypes. In the previous section, we discuss the two strategies to update prototypes: using the statistical mean of all data (*Mean*), or estimating as the moving average of the prototypes in mini-batches (*EMA*) and how to calculate the contrastive loss using pseudo labels. We experiment with these techniques on the baseline model, and the achieved results are shown in Table 2. Experiment results demonstrate that *EMA* method outperforms *Mean* no matter what pseudo-labels are used to update the prototypes: 53.62% vs. 53.44% in mIoU when using high confident pseudo-labels, and 53.20% vs. 52.32% in mIoU when no filter is applied on pseudo-labels. This might be due to the model being frequently unadaptable at the beginning of the training process. Using these features leads to an inaccurate estimation of prototypes. While estimating prototypes with *EMA* gives more attention

Table 1: Performance of different mixing strategies when adapting from GTA5 to Cityscapes.

Mixing method	Road	S.walk	Build.	Wall	Fence	Pole	T.Light	T.Sign	Veget.	Terrain	Sky	Person	Rider	Car	Truck	Bus	Train	M.Bike	Bike	**mIoU**
ClassMix	92.09	44.17	87.54	29.37	35.73	38.94	44.67	53.43	87.88	42.55	89.6	67.34	38.95	88.33	52.33	51.02	0	14.42	35.79	52.32
RClassMix	88.84	35.43	86.68	37.74	34.75	33.15	42.05	50.76	89.19	35.61	89.08	65.18	37.91	86.79	59.59	54.87	0.25	28.38	41.12	52.34
RCutMix	93.30	57.34	86.30	31.47	29.26	32.56	43.90	52.06	82.62	26.15	88.86	66.07	43.05	88.39	59.63	51.89	5.38	44.98	57.63	**54.78**
RClassMix +RCutMix	93.68	58.56	86.74	32.96	34.29	33.74	42.79	53.96	86.3	43.34	88.36	66.57	41.72	88.73	56.83	52.02	0.27	31.85	52.86	**55.03**

to the latest features, which is more valuable than features at the beginning. In addition, experimental results prove that using high confident pseudo labels to compute contrastive loss is better than taking all pseudo-labels (53.62% mIoU compared with 53.20% in mIoU).

Table 2: Comparing different strategies for updating prototypes.

Pseudo-labels		Update method		mIoU
Conf. score ≥ 0.9	All pixels	EMA	Mean	
	✓	✓		53.20
✓			✓	53.44
✓		✓		**53.62**

4.3.3 Combination of Multi-Level Contrastive Adaptation with Mixing Strategies. By integrating mixing techniques with MCLDA and employing only high confident pseudo labels to compute L_C and update prototypes, we aim to examine how mixing strategies enhance MCLDA. Table 3 shows that using our technique with the RClassMix strategy slightly improves performance (52.32% to 52.34%). However, using the RCutmix strategy causes a performance decline (54.78% to 53.55%). In particular, we achieve the best performance (56.76% mIoU) when integrating both RCutMix and RClassMix with our method MCLDA.

Table 3: Combination of mixing and multi-level contrastive adaptation techniques

UDA Method	Contrastive loss	RClassMix	RCutMix	**mIoU**
DACS				52.32
		✓		52.34
			✓	54.78
		✓	✓	**55.03**
	✓	✓		52.83
	✓		✓	53.55
MCLDA	✓	✓	✓	**56.76**

Effectiveness of Multi-level Contrastive Adaptation. To assess the effectiveness of multi-level adaptation, we conducted some experiments with contrastive loss at feature-level and at multi-level. Table 4 presents the outcomes of feature-level adaptation in isolation and feature-level and output-level adaptation in combination, resulting in mIoU scores of 55.95% and 56.76%, respectively. The highest mIoU score is achieved when both adaptations are combined, reaching 56.76%, thereby demonstrating the superiority of multi-level adaptation. Both forms of multi-level adaptation contribute to mitigating the domain shift, as they complement each other synergistically.

Table 4: Effectiveness of Multi-level Contrastive Adaptation

UDA Method	Feature-level	Multi-level	**mIoU**
DACS			**52.32**
MCLDA(RCutMix+RClassMix)	✓		**55.91**
MCLDA(RCutMix+RClassMix)		✓	**56.76**

4.4 Comparisons with State-of-the-Art Methods

Results on GTA5 → Cityscapes. As demonstrated in Table 5, our approach attains an mIoU of 56.8%, surpassing the baseline method DACS. It's important to note that both ProDA, ProCA, FAFS and G2L, which are comparable to our method, adopt multi-stage strategies, including a warm-up stage, and employ techniques such as distillation, which contribute significantly to an increase in mIoU, whereas our approach involves a less complex setup with only one training stage. Despite simplicity, the most challenging classes, including pole, person, rider, bike, and train, exhibit significant improvements compared to the baseline and previous approaches. Some visual results predicted by the baseline and our method MLCDA are presented in Fig. 2.

Results on SYNTHIA → Cityscapes. Our method achieves the mIoU score by 50.0% and 58.0% over the 16 and 13 categories respectively, which obtains the gains over the baseline DACS by 1.7% and 3.2%. Our method falls short of surpassing previous work, possibly due to the inherent challenge of creating coherent images when pasting objects from SYNTHIA onto Cityscapes.

5 CONCLUSION

This paper introduces MCLDA, a method that employs multi-level contrastive learning to align domains and enhance feature discriminability. Additionally, we introduce an image mixing strategy to address imbalanced data and consider class context. Our proposed method demonstrates comparable performance to the top-performing methods when using the same segmentation architecture, Deeplabv2 (ResNet101).

ACKNOWLEDGMENTS

This research is funded by Hanoi University of Science and Technology (HUST) under grant number T2022-PC-047. This research is also partially supported by NAVER Corporation within the framework of collaboration with the International Research Center for

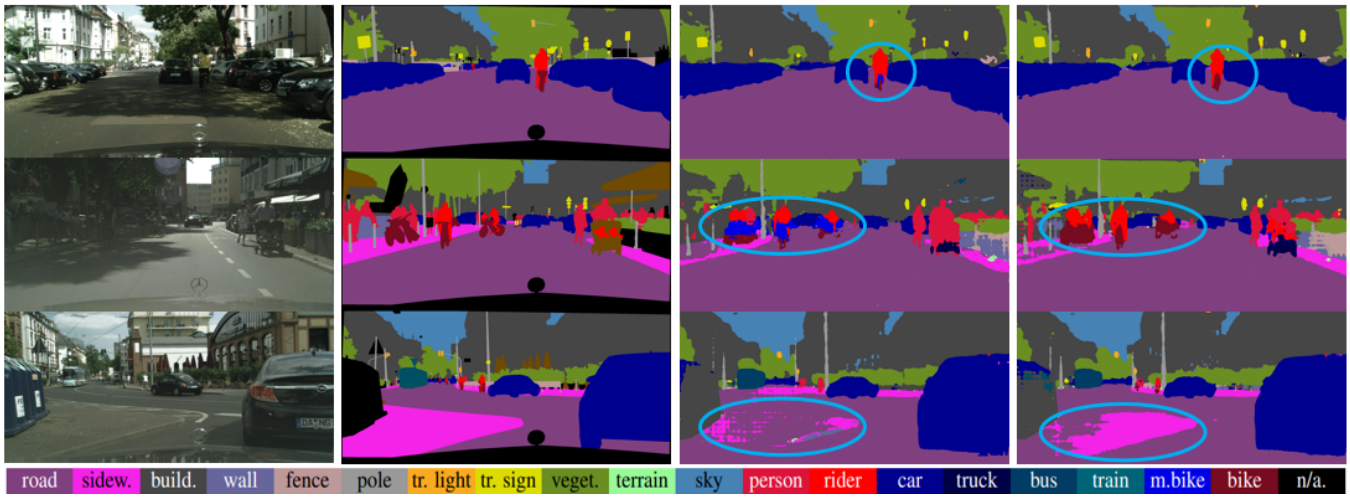

Figure 2: Qualitative segmentation results for GTA5 → Cityscapes. From the left to right: target images, ground truth, predictions by baseline DACS and our method MCLDA.

Table 5: Comparison with state-of-the-art methods for UDA. mIoU* represents the mean IoU of 13 classes, excluding the classes marked with an asterisk.

Method	Road	S.walk	Build.	Wall*	Fence*	Pole*	T. Light	T. Sign	Veget.	Terrain	Sky	Person	Rider	Car	Truck	Bus	Train	Motor.	Bike	**mIoU**	**mIoU***
GTA5 → Cityscapes																					
DACS[9]	89.9	39.7	87.9	30.7	39.5	38.5	46.4	52.8	88.0	44.0	88.8	67.2	35.8	84.5	45.7	50.2	0.0	27.3	34.0	52.1	–
ProCA [4]	91.9	48.4	87.3	41.5	31.8	41.9	47.9	36.7	86.5	42.3	84.7	68.4	43.1	88.1	39.6	48.8	40.6	43.6	56.9	56.3	–
CorDA[11]	94.7	63.1	87.6	30.7	40.6	40.2	47.8	51.6	87.6	47.0	89.7	66.7	35.9	90.2	48.9	57.5	0.0	39.8	56.0	56.6	–
ProDA[17]	87.8	56.0	79.7	46.3	44.8	45.6	53.5	53.5	88.6	45.2	82.1	70.7	39.2	88.8	45.5	59.4	1.0	48.9	56.4	57.5	–
G2L [6]	95.8	68.8	88.0	46.5	37.5	50.3	58.4	58.1	89.5	51.5	83.1	69.0	33.6	89.6	41.3	59.4	36.9	46.9	29.9	**59.7**	–
FAFS [7]	93.4	60.7	88.0	43.5	32.1	40.3	54.3	53.0	88.2	44.5	90.0	69.5	35.8	88.7	34.1	53.9	41.3	51.7	54.7	58.8	–
MCLDA	93.6	56.6	87.2	34.3	35.3	35.7	43.6	**55.9**	87.2	44.7	90.3	66.9	42.0	89.0	**56.7**	57.0	3.8	41.4	**57.2**	56.8	–
SYNTHIA → Cityscapes																					
DACS[9]	80.6	25.1	81.9	21.5	2.9	37.2	22.7	24.0	83.7	–	90.8	67.6	38.3	82.9	–	38.9	–	28.5	47.6	48.3	54.8
ProCA[4]	90.5	52.1	84.6	29.2	3.3	40.3	37.4	27.3	86.4	–	85.9	69.8	28.7	88.7	–	53.7	–	14.8	54.8	53.0	59.6
CorDA[11]	93.3	61.6	85.3	19.6	5.1	37.8	36.6	42.8	84.9	–	90.4	69.7	41.8	85.6	–	38.4	–	32.6	53.9	55.0	62.8
ProDA[17]	87.8	45.7	84.6	37.1	0.6	44.0	54.6	37.0	88.1	–	84.4	74.2	24.3	88.2	–	51.1	–	40.5	45.6	55.5	62.0
G2L [6]	87.8	45.1	85.1	25.2	1.3	46.9	53.3	46.4	88.1	–	86.0	72.0	40.6	91.4	–	62.9	–	35.6	41.1	**56.8**	**64.4**
FAFS [7]	83.1	43.4	83.7	29.3	0.9	44.2	46.1	38.1	86.6	–	91.1	67.4	28.1	88.6	–	45.9	–	37.1	58.7	54.5	61.4
MCLDA	63.5	25.2	83.0	11.3	0.6	34.0	34.6	**45.6**	86.1	–	87.7	63.1	32.2	83.6	–	**59.2**	–	33.2	**56.9**	50.0	58.0

Artificial Intelligence (BKAI), School of Information and Communication Technology, HUST under project NAVER.2022.DA06.

REFERENCES

[1] Judy Hoffman, Eric Tzeng, Taesung Park, Jun-Yan Zhu, Phillip Isola, Kate Saenko, Alexei Efros, and Trevor Darrell. 2018. Cycada: Cycle-consistent adversarial domain adaptation. In *International conference on machine learning*. Pmlr, 1989–1998.

[2] Judy Hoffman, Dequan Wang, Fisher Yu, and Trevor Darrell. 2016. Fcns in the wild: Pixel-level adversarial and constraint-based adaptation. *arXiv preprint arXiv:1612.02649* (2016).

[3] Lukas Hoyer, Dengxin Dai, and Luc Van Gool. 2022. Daformer: Improving network architectures and training strategies for domain-adaptive semantic segmentation. In *Proceedings of the IEEE/CVF Conference on CVPR*. 9924–9935.

[4] Zhengkai Jiang, Yuxi Li, Ceyuan Yang, Peng Gao, Yabiao Wang, Ying Tai, and Chengjie Wang. 2022. Prototypical contrast adaptation for domain adaptive semantic segmentation. In *European Conference on Computer Vision*. Springer, 36–54.

[5] Junjie Li, Yixin Zhang, Zilei Wang, and Keyu Tu. 2021. Probabilistic Contrastive Learning for Domain Adaptation. *arXiv preprint arXiv:2111.06021* (2021).

[6] Nguyen Viet Manh, Kieu Dang Nam, Dinh Viet Sang, and Thi-Oanh Nguyen. 2022. G2L: A Global to Local Alignment Method for Unsupervised Domain Adaptive Semantic Segmentation. *Procedia Comput. Sci.* 207, C (jan 2022), 2698–2707.

[7] Kieu Dang Nam, Tu M. Nguyen, Trinh V. Dieu, Muriel Visani, Thi-Oanh Nguyen, and Dinh Viet Sang. 2022. A Novel Unsupervised Domain Adaption Method for Depth-Guided Semantic Segmentation Using Coarse-to-Fine Alignment. *IEEE Access* 10 (2022), 101248–101262.

[8] Viktor Olsson, Wilhelm Tranheden, Juliano Pinto, and Lennart Svensson. 2021. Classmix: Segmentation-based data augmentation for semi-supervised learning. In *Proceedings of the IEEE/CVF Winter Conference on Applications of Computer Vision*. 1369–1378.

[9] Wilhelm Tranheden, Viktor Olsson, Juliano Pinto, and Lennart Svensson. 2020. DACS: Domain Adaptation via Cross-domain Mixed Sampling. *2021 IEEE Winter Conference on Applications of Computer Vision (WACV)* (2020), 1378–1388.

[10] Haoran Wang, Tong Shen, Wei Zhang, Ling-Yu Duan, and Tao Mei. 2020. Classes matter: A fine-grained adversarial approach to cross-domain semantic segmentation. In *European conference on computer vision*. Springer, 642–659.

[11] Qin Wang, Dengxin Dai, Lukas Hoyer, Luc Van Gool, and Olga Fink. 2021. Domain adaptive semantic segmentation with self-supervised depth estimation. In *Proceedings of the IEEE/CVF International Conference on Computer Vision*. 8515–8525.

[12] Binhui Xie, Mingjia Li, and Shuang Li. 2021. Spcl: A new framework for domain adaptive semantic segmentation via semantic prototype-based contrastive learning. *arXiv preprint arXiv:2111.12358* (2021).

[13] Binhui Xie, Shuang Li, Mingjia Li, Chi Harold Liu, Gao Huang, and Guoren Wang. 2023. Sepico: Semantic-guided pixel contrast for domain adaptive semantic segmentation. *IEEE Transactions on Pattern Analysis and Machine Intelligence* (2023).

[14] Yanchao Yang and Stefano Soatto. 2020. Fda: Fourier domain adaptation for semantic segmentation. In *Proceedings of the IEEE/CVF conference on CVPR*. 4085–4095.

[15] Sangdoo Yun, Dongyoon Han, Seong Joon Oh, Sanghyuk Chun, Junsuk Choe, and Youngjoon Yoo. 2019. Cutmix: Regularization strategy to train strong classifiers with localizable features. In *Proceedings of the IEEE/CVF international conference on computer vision*. 6023–6032.

[16] Kai Zhang, Yifan Sun, Rui Wang, Haichang Li, and Xiaohui Hu. 2021. Multiple fusion adaptation: A strong framework for unsupervised semantic segmentation adaptation. *arXiv preprint arXiv:2112.00295* (2021).

[17] Pan Zhang, Bo Zhang, Ting Zhang, Dong Chen, Yong Wang, and Fang Wen. 2021. Prototypical pseudo label denoising and target structure learning for domain adaptive semantic segmentation. In *Proceedings of the IEEE/CVF conference on CVPR*. 12414–12424.

[18] Qianyu Zhou, Chuyun Zhuang, Ran Yi, Xuequan Lu, and Lizhuang Ma. 2022. Domain adaptive semantic segmentation via regional contrastive consistency regularization. In *2022 IEEE International Conference on Multimedia and Expo (ICME)*. IEEE, 01–06.

[19] Yang Zou, Zhiding Yu, BVK Kumar, and Jinsong Wang. 2018. Unsupervised domain adaptation for semantic segmentation via class-balanced self-training. In *Proceedings of the European conference on computer vision (ECCV)*. 289–305.

[20] Yang Zou, Zhiding Yu, Xiaofeng Liu, BVK Kumar, and Jinsong Wang. 2019. Confidence regularized self-training. In *Proceedings of the IEEE/CVF international conference on computer vision*. 5982–5991.