Project: Slitherin'

Cam Gomberoff, Greg Joblove, Kate Sheran, and Kido Douglas

Contents

- Project goal p. 3
- Early design p. 4
- Prototyping challenges and solutions p. 5
- Materials and equipment p. 6
- Notable physical fabrication methods used p. 7
- CAD images and computation p. 8
- Final product p. 9
- Limitations and future improvements p. 10
- Individual contributions p. 11
- Decision making and project management p. 12
- Insights gained from the project p. 13

Project Goal

Our goal was to create a climber inspired by the movement of a snake/ centipede

Our design goal for the climber was to have it climb a ladder at a maximum of 45° angle and we wanted to maintain a compact and structural sound design

Early Plans/Brainstorming (Slitherin'?)

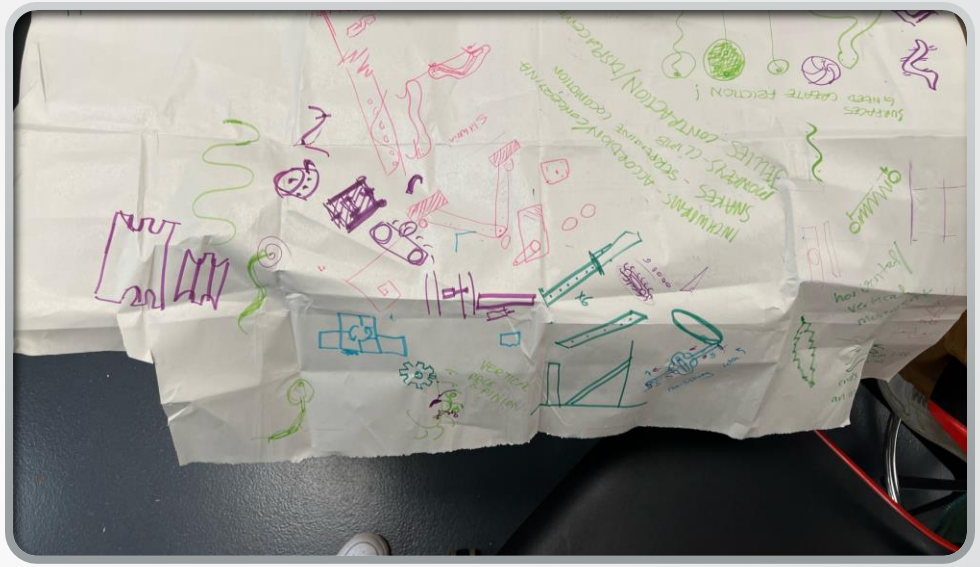

- Our initial goal was to create a biological ambulator able to slither, similar to a snake(hence the name Slitherin')

- Slithers involving much more in terms of motors, so we decided to shift towards a climber.
- We decided to take inspiration from an inchworm to create a climber that slowly inches up the ladder but more closely resembles a tank

Prototyping Challenges and Solutions

- Our process of prototyping was tough because it primarily consisted us adjusting measurements and designs for our gears
- Our final design relies heavily on the interaction of 5 gears to our treads, so we were force adjust and reprint our design until we got the right fit
- In the long run this would give us little time to adjust other aspects of our climber towards the end.

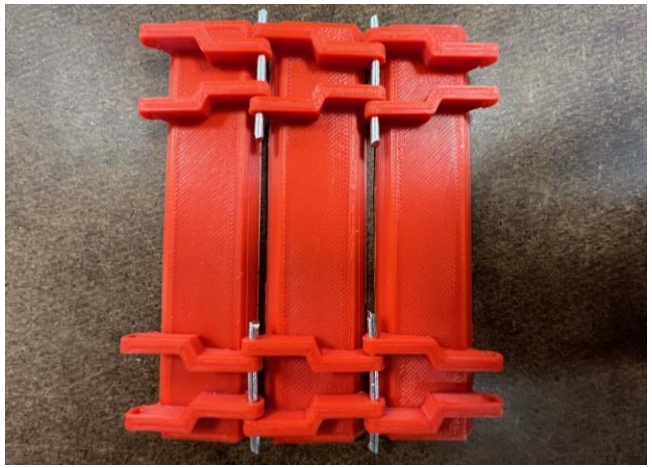

Materials and Equipment

Treads

Physical Fabrication Methods

For methods of Fabrication, we used 3D printing for the treads

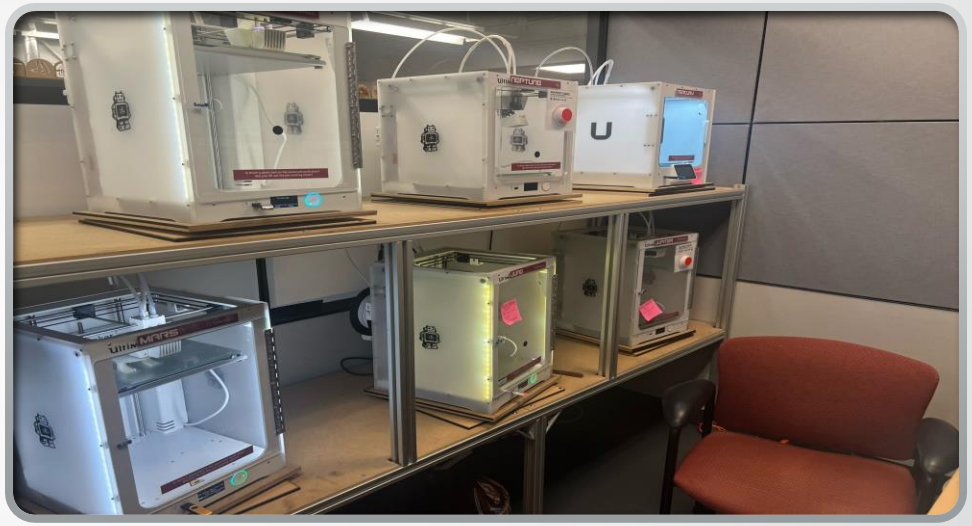

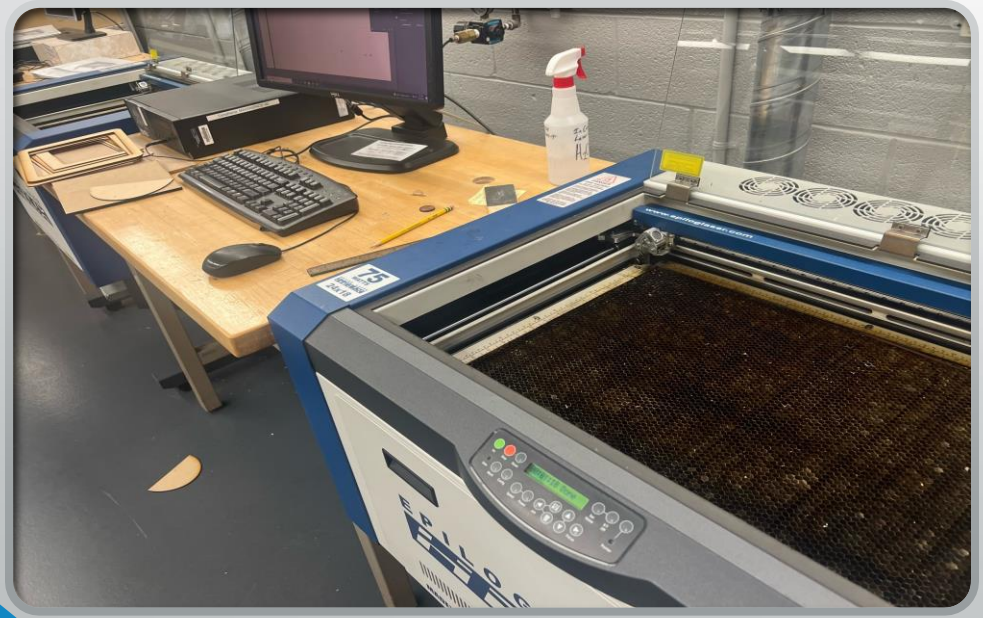

And laser cutting for the gears and frame

CAD Images & Computations

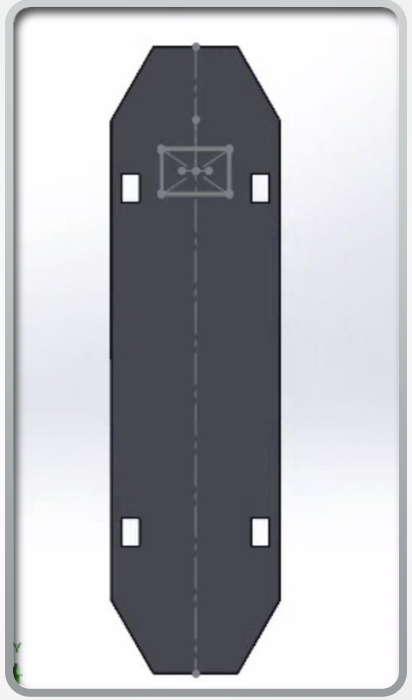

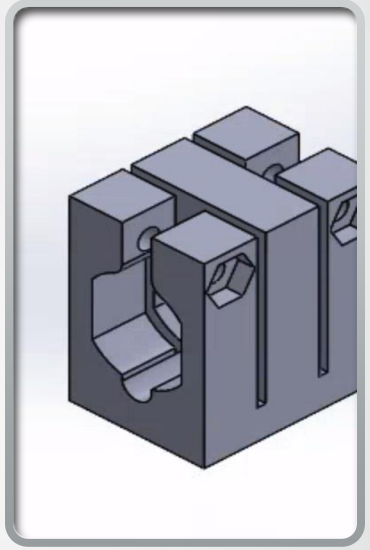

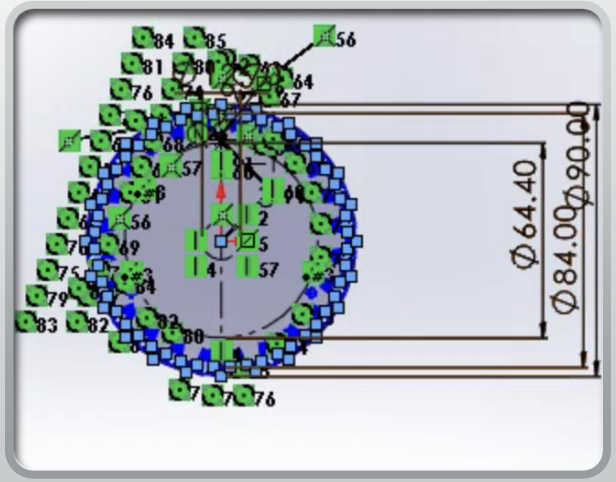

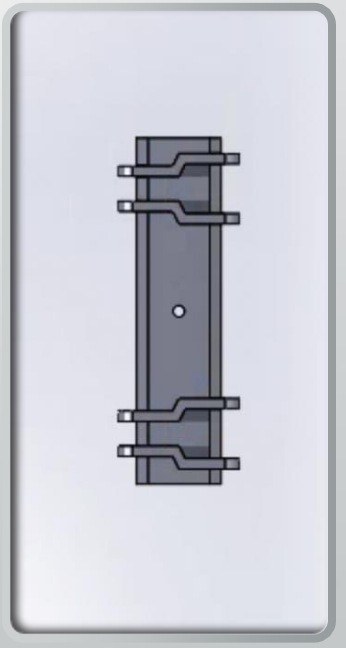

Final Product

- Does it work?

Our final product was successful, our tread like design is working and the entire frame moves on a flat surface and slightly inclined plane.

- Did we achieve our design goal?

Yes and no, we were able to stay true to the sleek and compact design we had intended, and it is able to climb the ladder but unfortunately the angle of the ladder watch much smaller than intended.

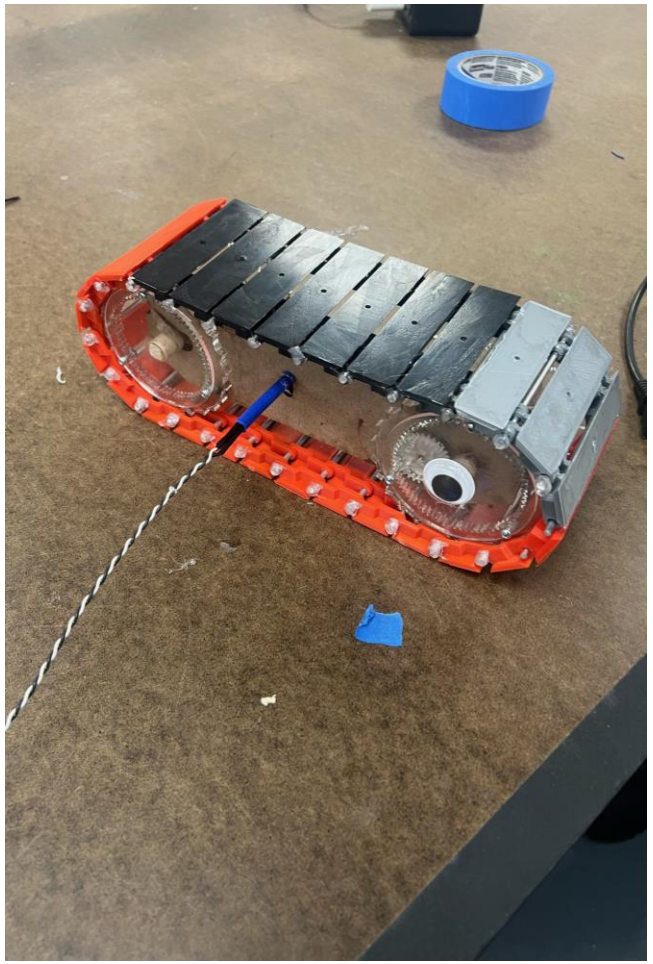

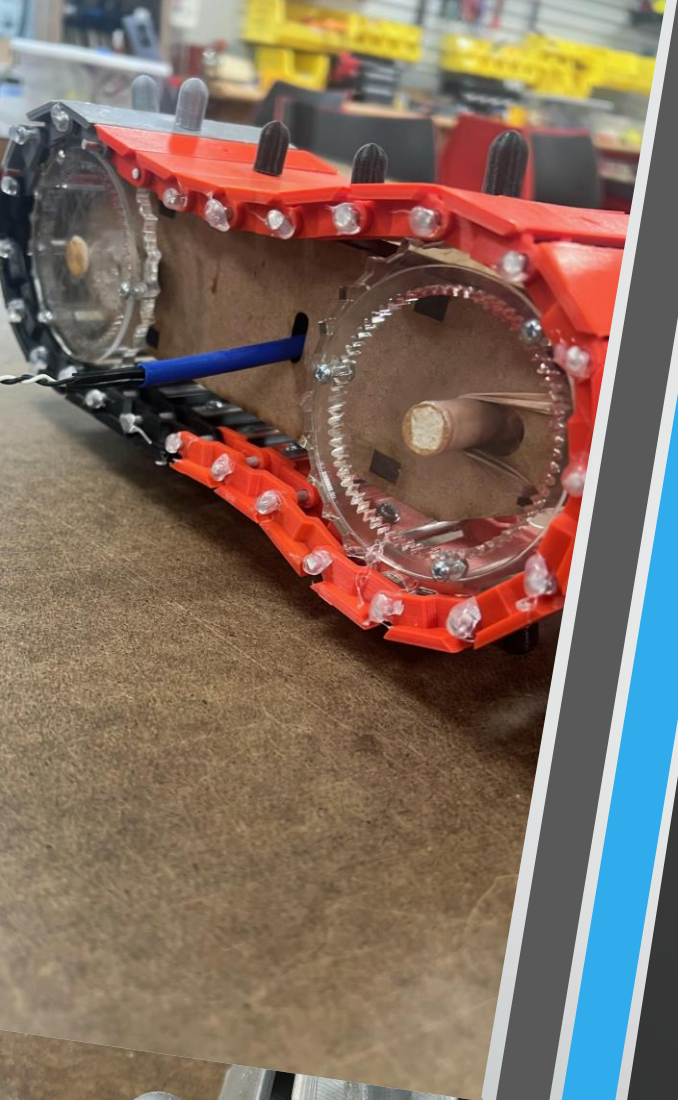

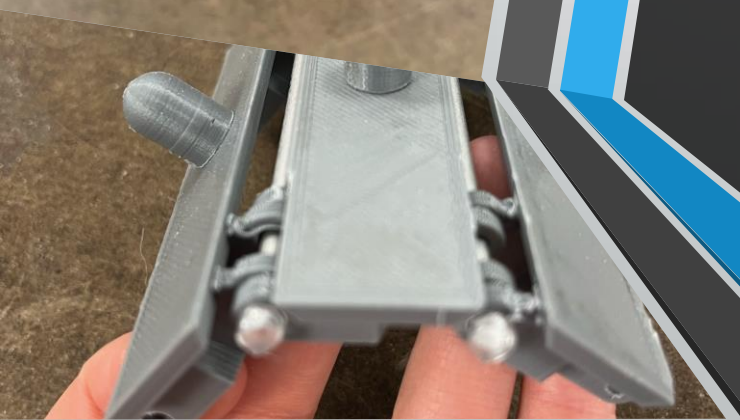

Limitations & Future Improvements

- Limitations
- Precision of measurements
- Motors
- Time for further adjustments
- If we were to continue…
- We would more than likely redesign how the treads interact with the rungs of the ladder and potentially shrink the size of our design as weight may have part of the issue with the climber's inability to scale higher the ladder at greater angles

Greg

Individual Contributions

How Did Our Team –Work?

- We generally picked an idea and once we were agreed on it, we all worked towards it.
- Due to our design, a lot of time was spent focused one aspect(gears, frame, etc.) forcing us to work in tandem rather than individually.
- Overall, we each did our best to take part in all aspects of the project and worked well as a group.

Collective Insights

- The importance and uses of different sized gears
  - Even a small change in the dimensions makes a difference in the functionality of the mechanism
- Smaller machines can climb easier
  - It's ideal to keep everything more compact in general
- The first attempt is never the last (trial and error)
  - Failure is normal and part of the process; it's very productive because you learn what to do differently from your mistakes
- Professor Ridley's always right