TRƯỜNG ĐẠI HỌC FPT

LAB211 Project Report

Homestay Booking Management

Student Name: Huynh Khac Kiet

Student Code: CE200178

Class: SE2047

Lecturer: Nguyen Tan Phuc

1. Introduction

This report presents the development of the Homestay Booking Management system. The application is implemented in Java using Object-Oriented Programming (OOP) principles and Computational Thinking (CT). The system supports managing homestays, tours, and bookings, including CRUD operations, searching, sorting, input validation, and data storage using text files.

2. Requirement Analysis

The project is based on the assignment J1.L.P0034 with the following requirements:

- Manage Tour information stored in Tours.txt
- Manage Homestay information stored in Homestays.txt
- Manage Booking information stored in Bookings.txt
- Provide 13 main functions:

1. Add a new Tour
2. Update a Tour by ID
3. List the Tours with departure dates earlier than the current date
4. List the total Booking amount for tours with departure dates later than the current date
5. Add a new Booking
6. Remove a Booking by bookingID
7. Update a Booking by bookingID
8. List all Booking by the fullName or a partial fullName
9. Statistics on the total number of tourists who have booked homestays
10. Quit program

3. Applying Computational Thinking

3.1. Decomposition

The system is divided into **4** main modules:

- HomestayManager: list, add, update, delete, display.
- TourManager: create, update, search, validate schedules, handle status.
- BookingManager: add, update, remove, search by name.
- FileHandler: read/write tour, homestay, booking data from text files.

3.2. Pattern Recognition

Common patterns include:

- Each entity (Homestay, Tour, Booking) has a unique ID.
- All entities support basic CRUD operations such as add, update, delete, and list.

- Input validation is consistently applied across entities to ensure data correctness.
- All data can be persisted by reading from and writing to text files.

3.3. Abstraction

Essential attributes are identified:
- Tour: id, name, time, price, homeId, departureDate, endDate, numberTourist.
- Homestay: id, name, roomNumber, address, maximumCapacity.
- Booking: id, fullName, tourId, bookingDate, phone.

Unnecessary details are omitted to focus on the core attributes and behaviors required for managing homestay bookings effectively.

3.4. Algorithm Design

3.4.1. Add New Tour

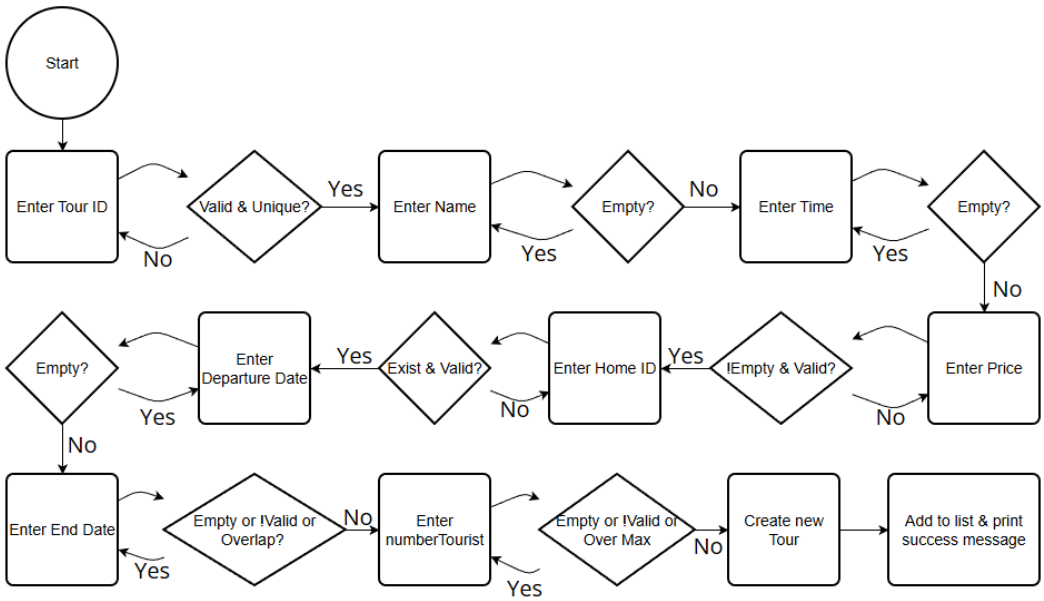

Step 1: Input tour information (ID, name, price, homestay ID, departure date, end date, number of tourists).
Step 2: Validate tour ID format and uniqueness.
Step 3: Validate homestay ID existence.
Step 4: Check date range validity and detect overlapping schedules for the same homestay.
Step 5: Validate number of tourists does not exceed homestay capacity.
Step 6: If valid, create a new Tour object and add it to the tour list.
Step 7: Display success message.

3.4.2. Update Tour

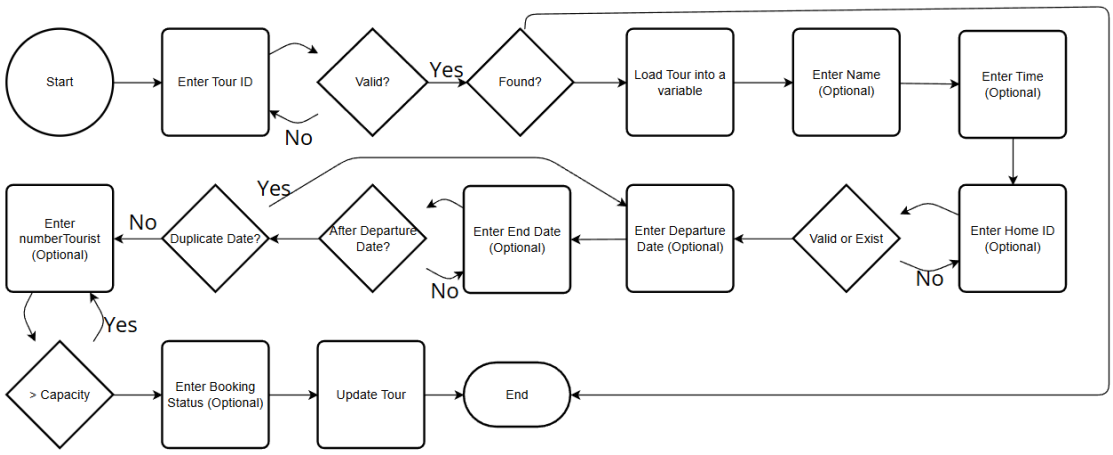

Step 1: Input tour ID to update.
Step 2: Check tour existence.
Step 3: Input new information (skip fields if empty).
Step 4: Validate updated homestay, dates, and capacity constraints.
Step 5: Update tour information in the system.
Step 6: Display success message.

3.4.3. Show Completed Tours

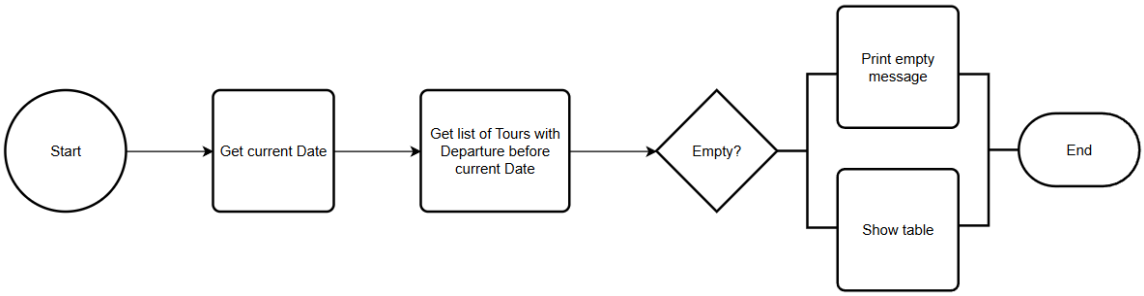

Step 1: Get the current system date.
Step 2: Retrieve tours whose departure date is before the current date.
Step 3: Display the list of completed tours.

3.4.4. Show Total Amount of Future Tours

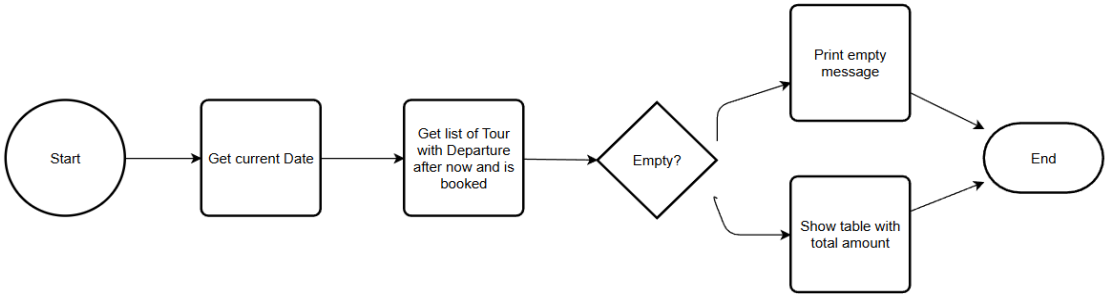

Step 1: Get the current system date.
Step 2: Retrieve future tours that have been booked.
Step 3: Calculate total amount for each tour.
Step 4: Sort tours by total amount in descending order.
Step 5: Display the result.

3.4.5. Add New Booking

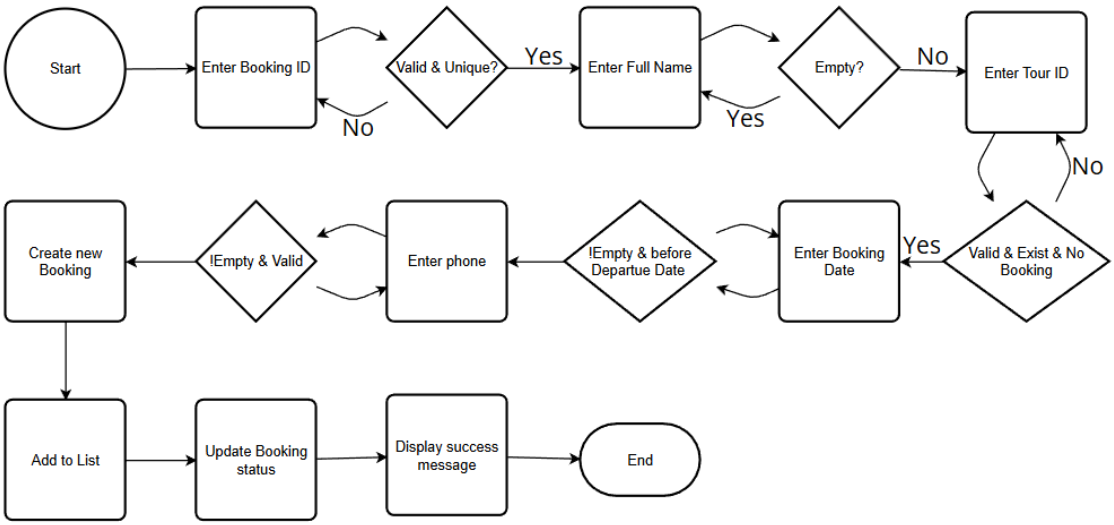

Step 1: Input booking information (ID, customer name, tour ID, booking date, phone).
Step 2: Validate booking ID format and uniqueness.
Step 3: Validate tour ID existence and booking availability.
Step 4: Validate booking date is before tour departure date.
Step 5: Create a Booking object and add it to the booking list.
Step 6: Update tour booking status.
Step 7: Display success message.

3.4.6. Delete Booking

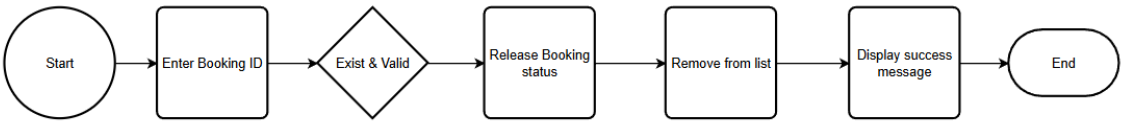

Step 1: Input booking ID to remove.
Step 2: Check booking existence.
Step 3: Release the booking status of the related tour.
Step 4: Remove booking from the list.
Step 5: Display success message.

3.4.7. Update Booking

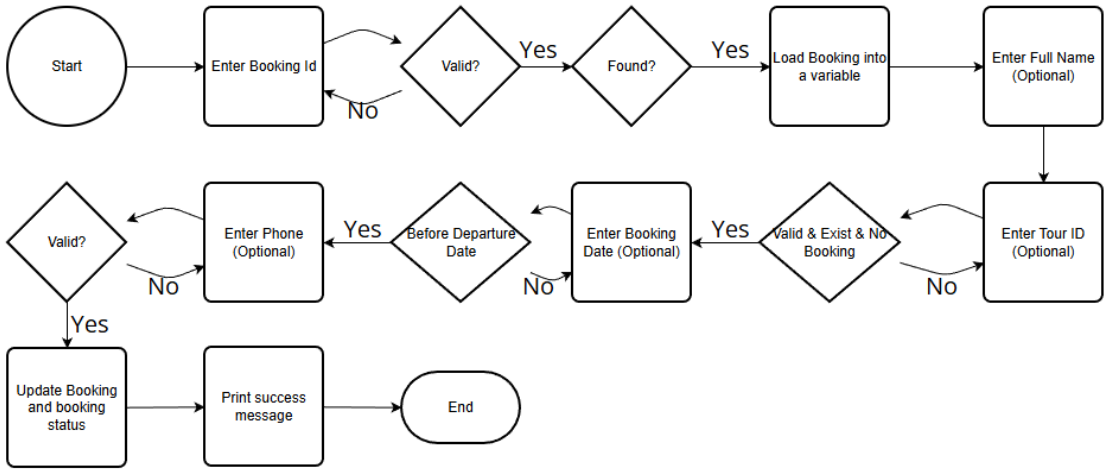

Step 1: Input booking ID to update.
Step 2: Check booking existence.
Step 3: Input new booking information (optional).
Step 4: Validate tour availability and booking date.
Step 5: Update booking and tour booking status.
Step 6: Display success message.

3.4.8. Search Booking by Full Name

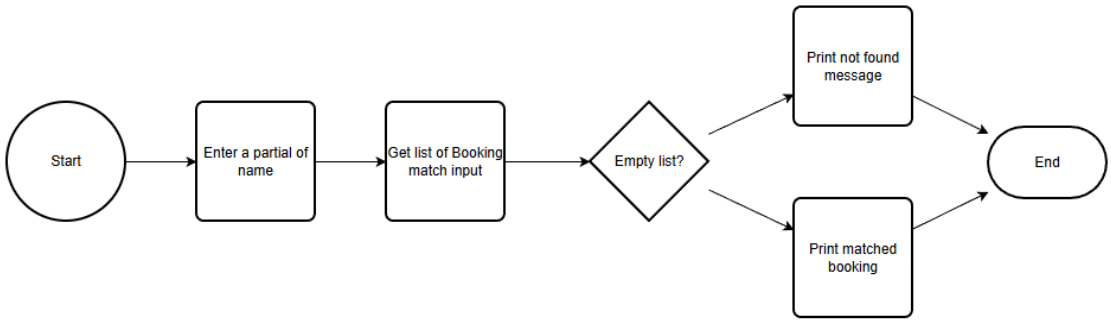

Step 1: Input customer name or keyword.
Step 2: Search bookings matching the input keyword.
Step 3: Display search results.

3.4.9. Show Statistics of Tourists per Homestay

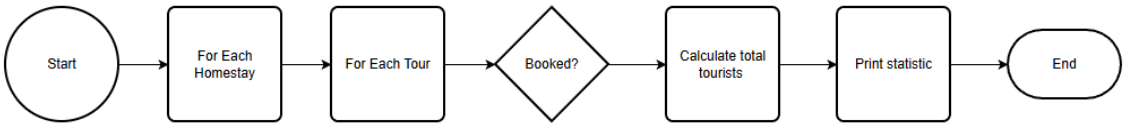

Step 1: Retrieve all homestays.
Step 2: For each homestay, calculate total tourists from booked tours.
Step 3: Display statistical information.

3.4.10. Save Data and Exit Program

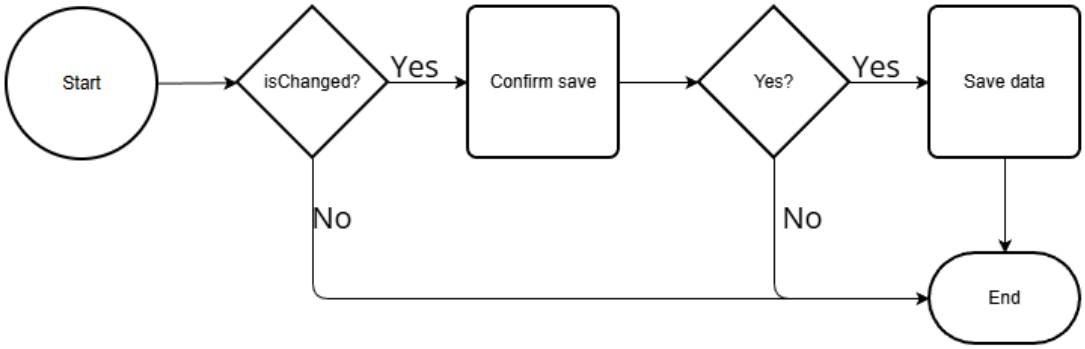

Step 1: Check whether data has been modified.
Step 2: Ask user to save changes before exiting.
Step 3: Save tour and booking data to files if confirmed.
Step 4: Exit the program.

4. System Design (UML)

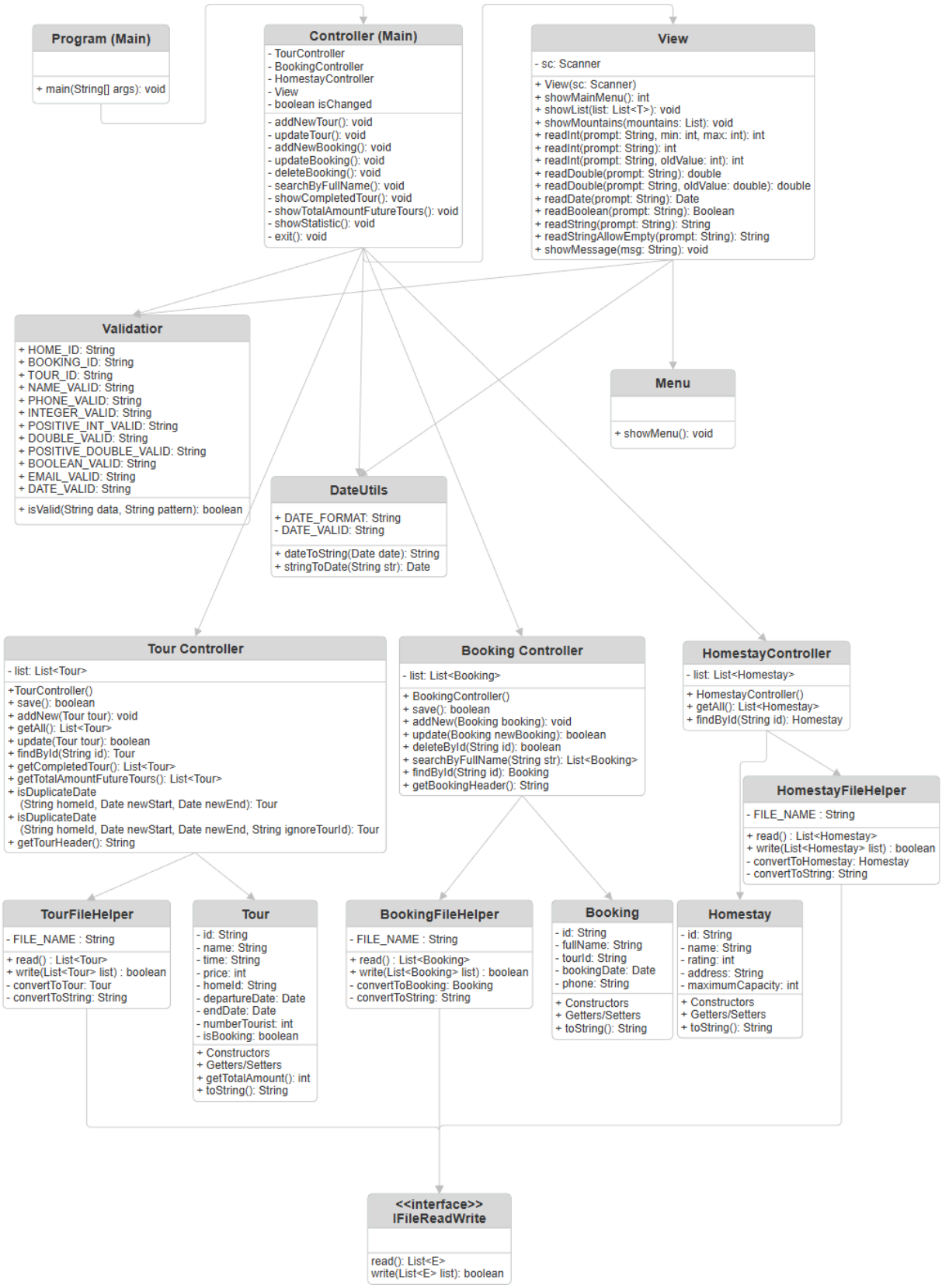

5. Implementation & Testing

The application is implemented in Java console application. Main test cases include:

5.1. Add a valid tour

Purpose: To verify that the system correctly adds a new tour when valid information is provided.

Preconditions:

- The tour ID does not already exist in the system.
- The homestay ID exists.
- The departure date is before the end date.
- The number of tourists does not exceed the homestay capacity.
- No overlapping tour exists for the same homestay within the given date range.

5.2. Update a tour

Purpose: To verify that the system allows updating tour information correctly based on the tour ID.

Preconditions:

- The tour ID to be updated already exists.
- Updated dates do not cause overlap with other tours of the same homestay.
- Updated number of tourists does not exceed homestay capacity.

5.3. Display completed tours

Purpose: To ensure that the system correctly lists tours that have already been completed.

Preconditions:

- The system date is later than the departure date of at least one tour.
- Tour data has been loaded successfully.

5.4. List future tours by total amount

Purpose: To verify that future tours are displayed and sorted in descending order based on total booking amount.

Preconditions:

- At least one tour has a departure date later than the current date.
- Tour data is available in the system.

5.5. Add a valid booking

Purpose: To confirm that the system can successfully add a new booking with valid data.

Preconditions:

- The booking ID does not already exist.
- The selected tour exists and has not been booked.
- The booking date is earlier than the tour's departure date.
- The phone number is in a valid format.

5.6. Remove a booking

Purpose: To verify that the system correctly removes a booking and updates the corresponding tour status.

Preconditions:

- The booking ID exists.
- The related tour is marked as booked before deletion.

5.7. Update a booking

Purpose: To ensure that booking information can be updated correctly.

Preconditions:

- The booking ID exists in the system.
- The updated tour ID exists and is not already booked by another booking.
- The updated booking date is earlier than the departure date of the selected tour.

5.8. Search booking by full name

Purpose: To verify that the system can search and display bookings using a partial or full customer name.

Preconditions:

- At least one booking exists in the system.
- The search keyword is provided.

5.9. Statistics of tourists per homestay

Purpose: To ensure that the system correctly calculates and displays the total number of tourists for each homestay.

Preconditions:

- Homestay and tour data are loaded.

- Some tours are booked and associated with homestays.

5.10. Save and reload data from files

Purpose: To verify that all tour and booking data are correctly saved to text files and reloaded upon restarting the program.

Preconditions:

- New data have been added, updated, or deleted.
- Files Tours.txt and Bookings.txt are accessible for reading and writing.

6. Experimental Results

6.1. Main Menu

- Displays all available system functions.
- Allows users to select operations from 1 to 10.

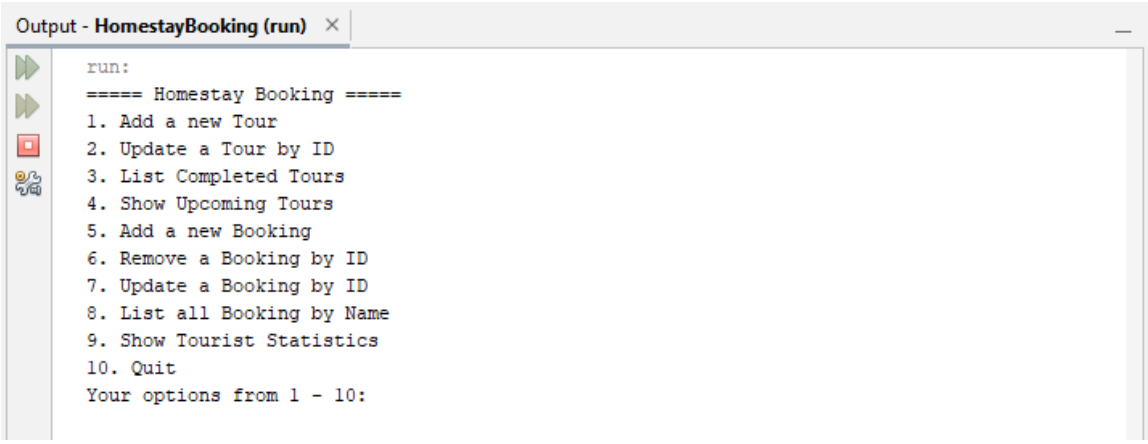

6.2. Add New Tour

- The system successfully adds a new tour when valid data is entered.
- Input validation is performed for tour ID, date range, homestay capacity, and overlap checking.

```
Your options from 1 - 10: 1
Enter Tour ID: T00007
ID already exists!
Enter Tour ID: T00008
Enter Name:
Name cannot by empty! Try again: TPHCM-Ha Giang
Enter Time: 3 days 4 nights
Enter Price: dfe
Price must be positive number integer!
Enter Price: 400
Enter Home ID: HS00006
Invalid ID format (e.g. HS0001)!
Enter Home ID: HS0006
Enter Departure Date: 24/2/2026
Enter End Date: 27/2/2026
The Homestay HS0006 is already occupied from 23/02/2026 to 26/02/2026. Please choose a different time range.
Enter Departure Date: 1/3/2026
Enter End Date: 5/3/2026
Enter Number of Tourist: 30
Capacity exceeded! This homestay can only host up to 14 tourists.
Enter Number of Tourist: 10
Add a new tour successfully!
```

6.3. Update Tour

- Tour information is updated correctly based on tour ID.
- The system prevents overlapping dates and capacity violations.

```
Your options from 1 - 10: 2
Enter Tour ID to update: T00008
Enter Name (Current: TPHCM-Ha Giang):
Enter Time (Current: 3 days 4 nights): 2 days 1 nights
Enter Price (Current: 400): 250
Enter Home ID (Current: HS0006):
Enter Departure (Current: 01/03/2026): 22/2/2026
Enter End Date (Current: 05/03/2026): 24/2/2026
Overlap detected! Homestay HS0006 is busy from 23/02/2026 to 26/02/2026
Enter Departure (Current: 01/03/2026): 2/3/2026
Enter End Date (Current: 05/03/2026): 4/3/2026
Enter Number of Tourist (Current: 10): 15
Exceeds capacity! Max is 14
Enter Number of Tourist (Current: 10): 9
Is Booked? (Current: false) [Y/N]: n
Update Tour with ID: T00008 successfully!
```

6.4. Display Completed Tours

- Completed tours are listed correctly based on the current date.

```
Your options from 1 - 10: 3
===== Completed Tours =====
```

ID	Tour Name	Duration	Price	HomeID	Start	End	Slots	Booked	Total
T00001	TPHCM-Da Lat	3 days 2 nights	300	HS0001	10/01/2026	12/01/2026	5	Yes	1500
T00002	TPHCM-Da Lat	3 days 2 nights	280	HS0002	10/01/2026	12/01/2026	6	Yes	1680
T00003	TPHCM-Moc Chau	4 days 3 nights	350	HS0003	14/01/2026	17/01/2026	3	No	1050
T00004	TPHCM-Moc Chau	4 days 3 nights	350	HS0003	19/01/2026	22/01/2026	3	No	1050
T00005	TPHCM-Moc Chau	4 days 3 nights	400	HS0004	19/01/2026	22/01/2026	3	No	1200
T00006	Dong Nai - Moc Chau	3 days 2 nights	300	HS0003	23/01/2026	25/01/2026	9	No	2700

6.5. List Future Tours by Total Amount

- Future tours are displayed and sorted in descending order of total booking amount.

```
10. Quit
Your options from 1 - 10: 4
===== Total Amount of Future Tours =====
-------------------------------------
| Tour ID  | Start        | Total  |
-------------------------------------
| T00007   | 23/02/2026   |   3500 |
| T00008   | 02/03/2026   |   2250 |
```

6.6. Add New Booking

- A booking is created successfully when all input conditions are satisfied.
- Invalid booking dates or booked tours are correctly rejected.

```
Your options from 1 - 10: 5
Enter Booking ID: B00002
ID already exists!
Enter Booking ID: B00003
Enter Full Name: Huynh Khac Kiet
Enter Tour ID: T00007
This tour has already been booked!
Enter Tour ID: T00006
Enter Booking Date: 24/1/2026
Booking Date must be before the Departure Date of your tour!
Enter Booking Date: 19/1/2026
Enter Phone: 0123456789
Add a new booking successfully!
```

6.7. Remove Booking

- The system successfully removes a booking.
- The related tour's booking status is updated accordingly.

```
Your options from 1 - 10: 6
Enter Booking ID to delete: Bfehv
Invalid ID format (e.g. B12345)!
Enter Booking ID to delete: B00004
Remove booking with ID: B00004 successfully!
```

6.8. Update Booking

- Booking information is updated correctly, including tour ID, booking date, and phone number.
- The system prevents updating to a tour that has already been booked.
- Booking date validation ensures it is earlier than the tour's departure date.

```
Your options from 1 - 10: 7
Enter Booking ID to update: B00004
Enter Full Name (Current: Le Thi C):
Enter Tour Id (Current: T00007): T00010
This Tour id does not exist!
Enter Tour Id (Current: T00007): T00006
Enter Booking Date (Current: 01/02/2026): 24/1/2026
Booking Date must be before the Departure Date of your tour!
Enter Booking Date (Current: 01/02/2026): 22/1/2026
Enter Phone (Current: 0123456789):
Update Booking with ID: B00004 successfully!
```

6.9. Search Booking by Full Name

- The system displays matching bookings based on partial or full customer names.

```
Your options from 1 - 10: 8
Enter a partial Full Name to search: an
===== Search Booking =====
-------------------------------------------------------------------------
| ID       | Full Name            | Tour ID  | Booking Date |      Phone |
-------------------------------------------------------------------------
| B00001   | Tran Thi Khanh Anh   | T00001   | 09/01/2026   | 0123456789 |
| B00002   | Le Van An            | T00002   | 01/01/2026   | 0123456789 |
```

6.10. Statistics of Tourists per Homestay

- The system correctly calculates and displays the total number of tourists for each homestay.

```
Your options from 1 - 10: 9
===== Statistics =====
---------------------------------------------
| Homestay                 | Number Tourist |
---------------------------------------------
| Alee DaLat Homestay      |              5 |
| Tournesol Villa Homestay |              6 |
| HomeStay Butter House    |              9 |
| Moc Chau Hill House      |              0 |
| Papa's Garden Homestay   |              0 |
| Dong Van CliffSide House |              9 |
```

6.11. Exit and Save Confirmation

- When the user selects the Exit function, the system checks whether there are unsaved changes.
- If data has been modified, the system prompts the user to confirm whether to save before exiting.
- Upon confirmation, the system saves all updated data to text files and exits safely.

```
Your options from 1 - 10: 10
You have unsaved changes. Save before exiting? (Y/N): y
Data saved successfully.
Exiting program...
BUILD SUCCESSFUL (total time: 49 minutes 23 seconds)
```

7. Appendix

Source files:

- Main.java
- Tour.java
- Booking.java
- Homestay.java
- TourController.java
- BookingController.java
- HomestayController.java
- View.java
- Menu.java
- Validator.java
- DateUtils.java
- IFileReadWrite.java
- TourFileHelper.java
- BookingFileHelper.java
- HomestayFileHelper.java

Sample data files:

- Tours.txt
- Bookings.txt
- Homestays.txt