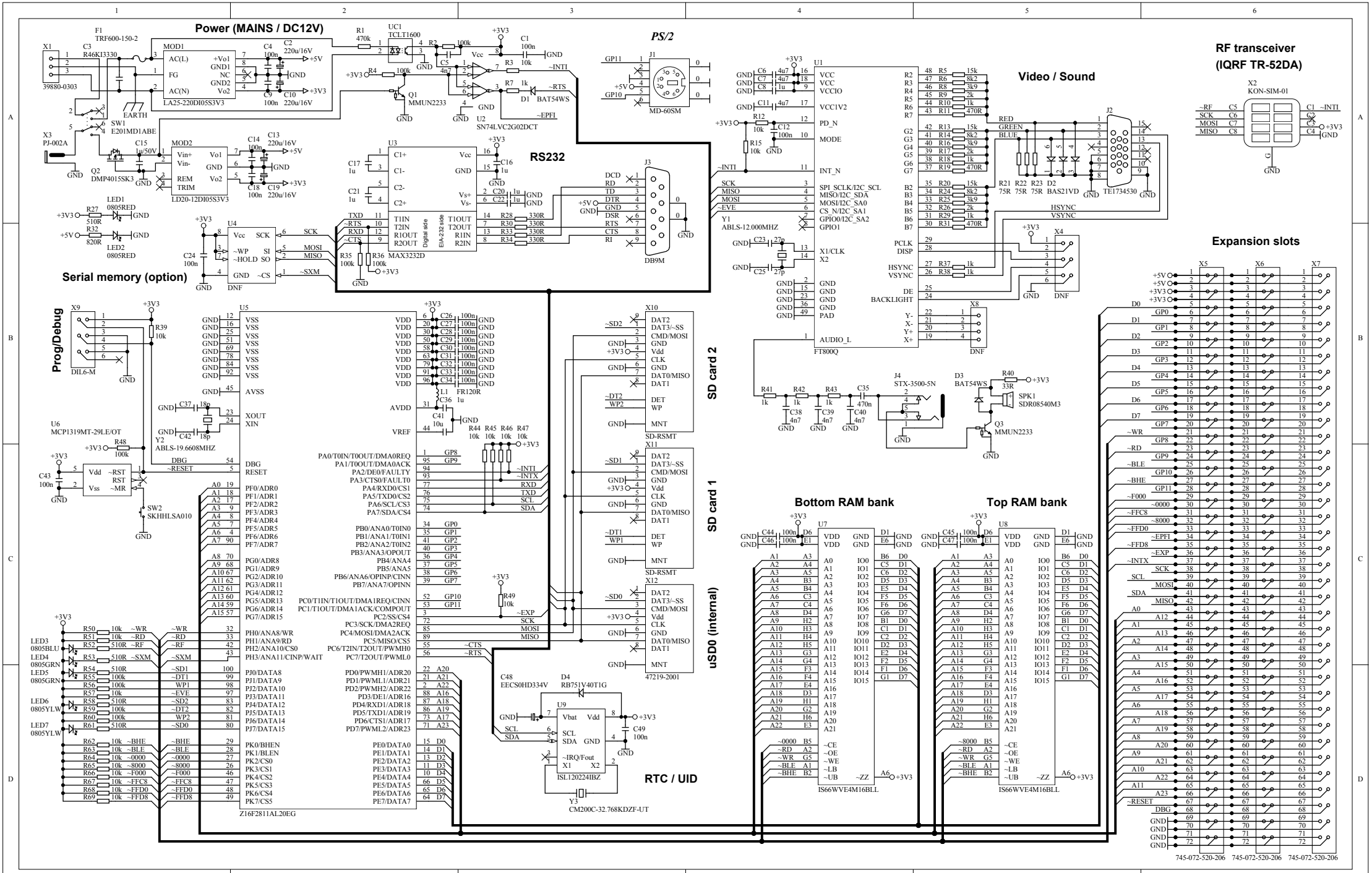
Power (MAINS / DC12V)
PS/2
RF transceiver
(IQRF TR-52DA)
Video / Sound
RS232
Serial memory (option)
Expansion slots
Prog/Debug
SD card 2
SD card 1
uSD0 (internal)
Bottom RAM bank
Top RAM bank
RTC / UID
F1
TRF600-150-2
X1
39880-0303
C3
R46K13330
MOD1
LA25-220DI05S3V3
EARTH
SW1
E201MD1ABE
X3
PJ-002A
Q2
DMP4015SK3
MOD2
LD20-12DI05S3V3
LED1
0805RED
LED2
0805RED
R27
510R
R32
820R
U4
DNF
R1
470k
UC1
TCLT1600
Q1
MMUN2233
U2
SN74LVC2G02DCT
D1
BAT54WS
~INTI
~RTS
~EPFI
U3
MAX3232D
Digital side
EIA-232 side
DB9M
J3
U1
FT800Q
Y1
ABLS-12.000MHZ
J1
MD-60SM
X2
KON-SIM-01
J2
TE1734530
BAS21VD
X4
DNF
X8
DNF
J4
STX-3500-5N
D3
BAT54WS
SPK1
SDR08540M3
Q3
MMUN2233
X9
DIL6-M
U5
Z16F2811AL20EG
U6
MCP1319MT-29LE/OT
Y2
ABLS-19.6608MHZ
SW2
SKHHLSA010
X10
SD-RSMT
X11
SD-RSMT
X12
47219-2001
U7
IS66WVE4M16BLL
U8
IS66WVE4M16BLL
U9
ISL120224IBZ
Y3
CM200C-32.768KDZF-UT
C48
EECS0HD334V
D4
RB751V40T1G
X5
X6
X7
745-072-520-206
745-072-520-206
745-072-520-206