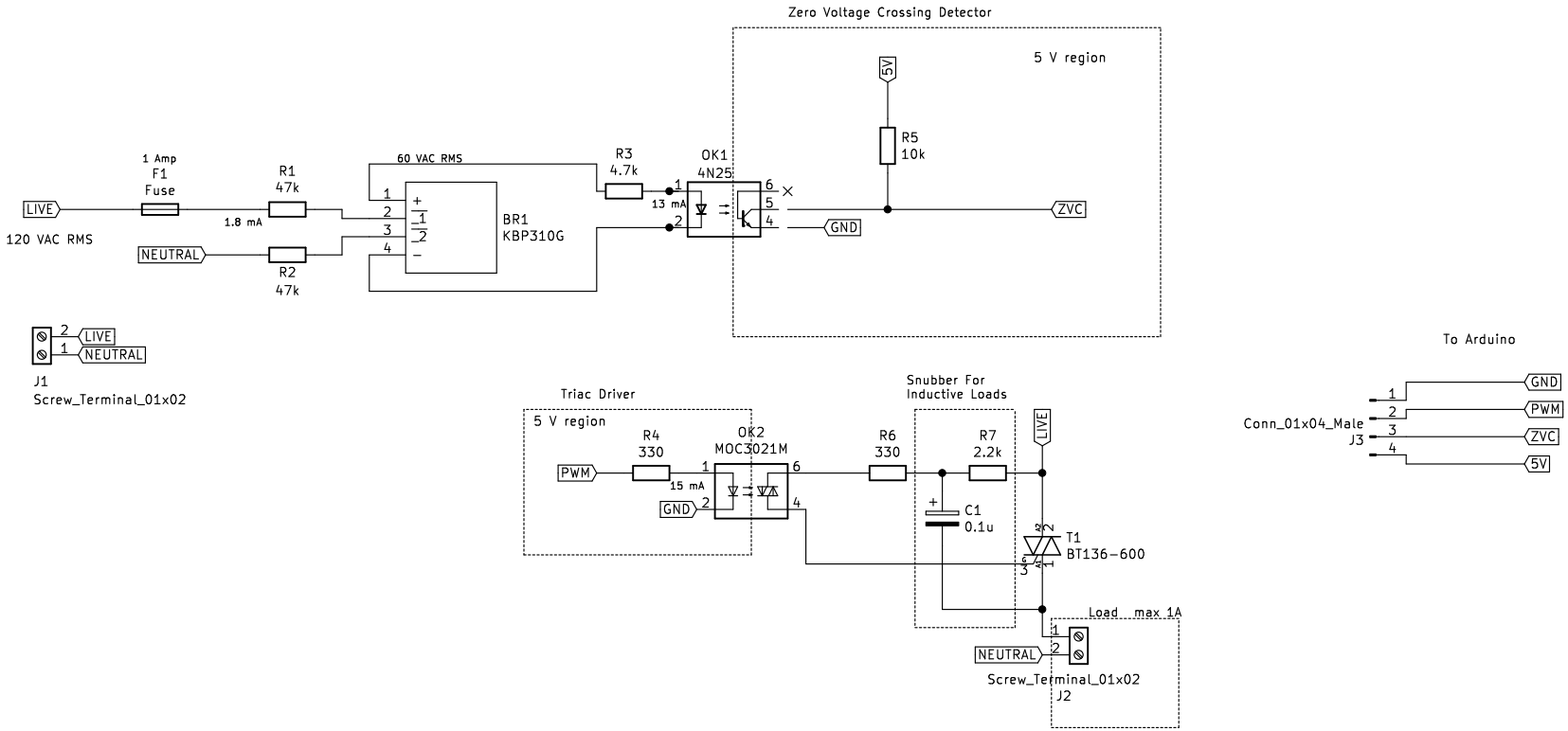

Stu Soorholtz

Sheet: /

File: SpeedControl.sch

Title: Sewing Speed Control

Size: USLetter	Date: 2021-03-16	**Rev: 1**
KiCad E.D.A. kicad (5.1.9)-1		Id: 1/1