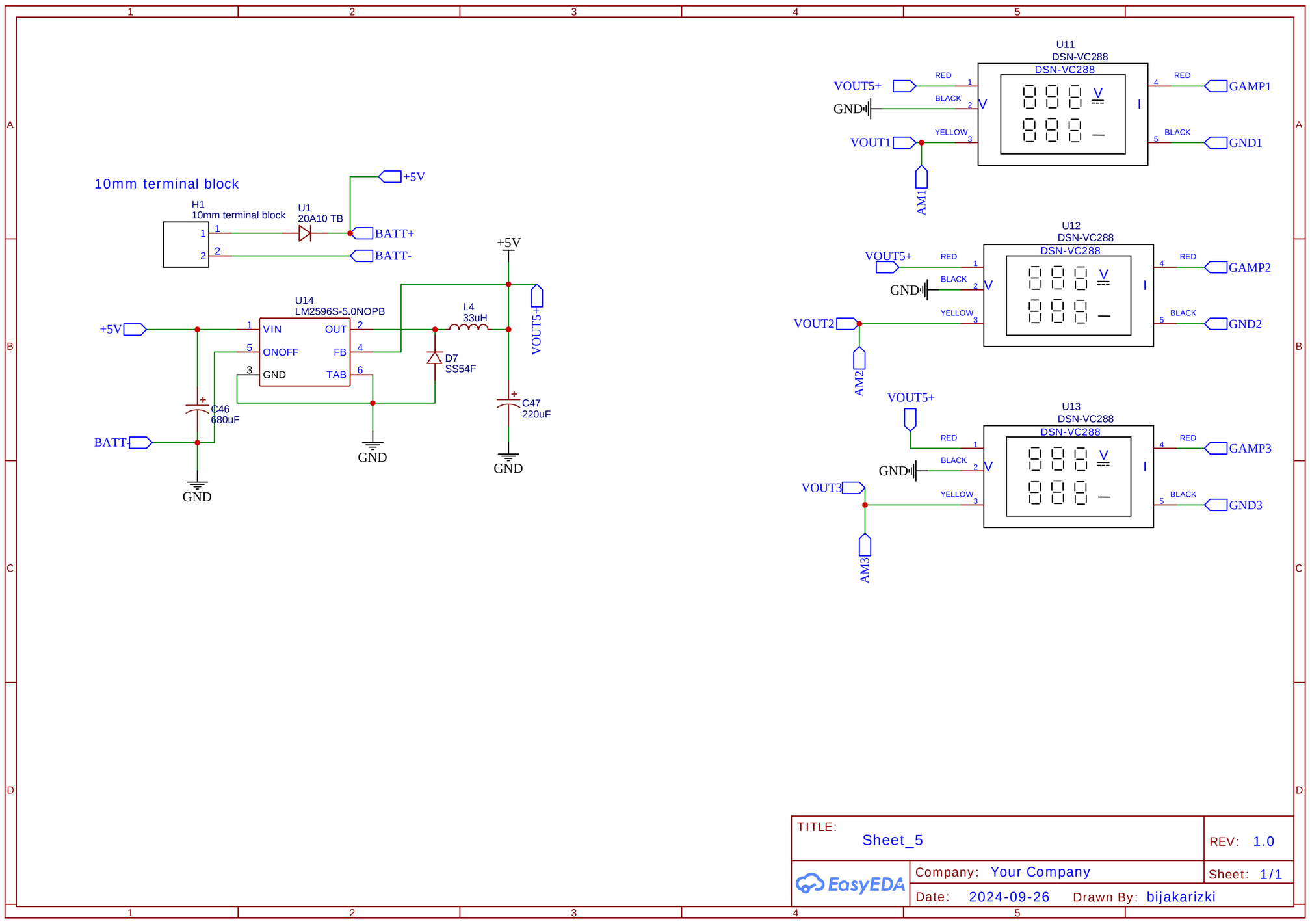
10mm terminal block
H1
10mm terminal block
U1
20A10 TB
BATT+
BATT-
+5V
U14
LM2596S-5.0NOPB
VIN
ONOFF
GND
OUT
FB
TAB
L4
33uH
D7
SS54F
C46
680uF
C47
220uF
VOUT5+
BATT-
GND
U11
DSN-VC288
U12
DSN-VC288
U13
DSN-VC288
RED
BLACK
YELLOW
VOUT5+
GND
VOUT1
VOUT2
VOUT3
AM1
AM2
AM3
GAMP1
GND1
GAMP2
GND2
GAMP3
GND3
TITLE:
Sheet_5
REV: 1.0
Company: Your Company
Sheet: 1/1
Date: 2024-09-26
Drawn By: bijakarizki
EasyEDA

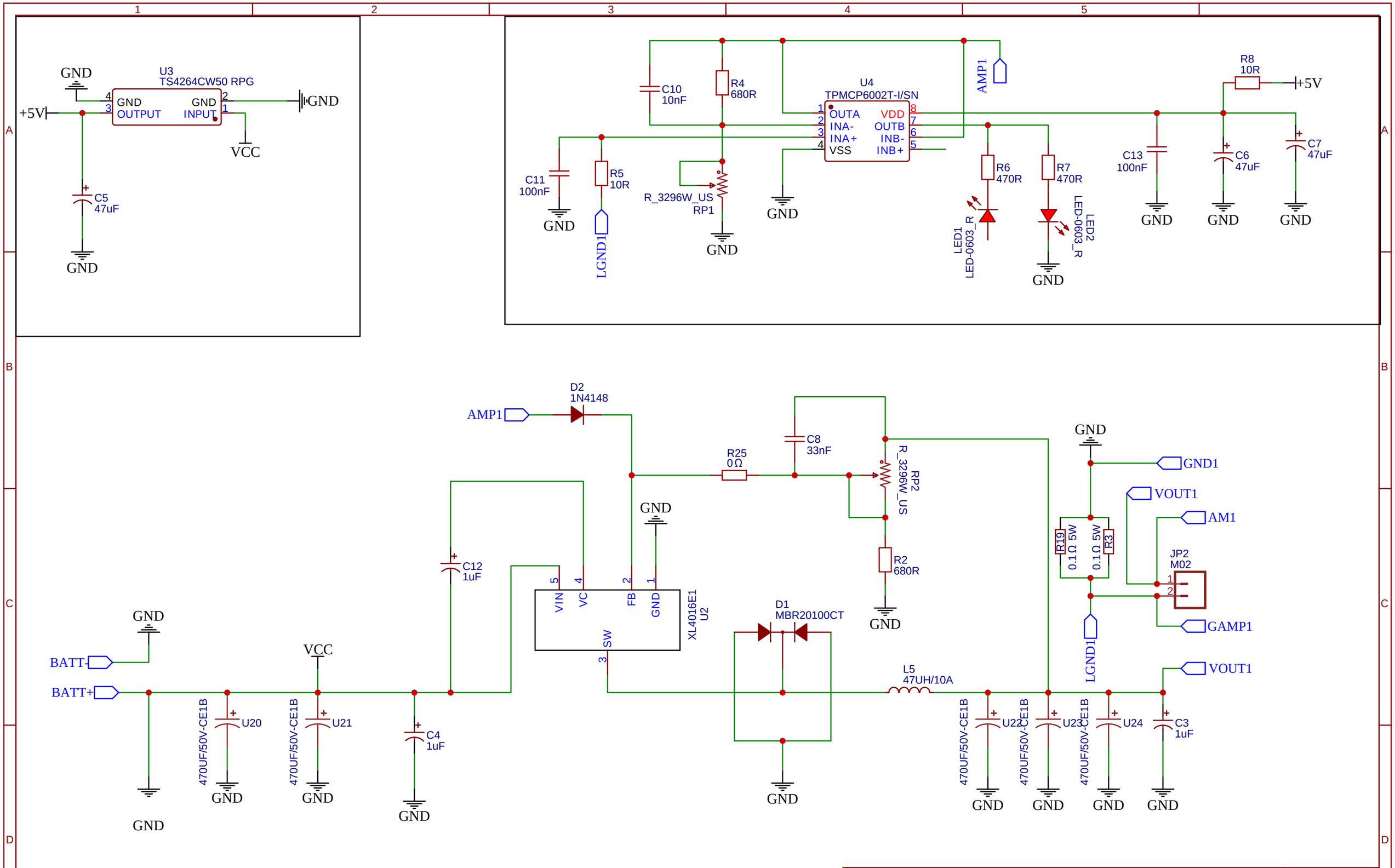

TITLE: Sheet_2	REV: 1.0
EasyEDA	Company: Your Company
	Sheet: 1/1
	Date: 2024-09-26 Drawn By: bijakarizki

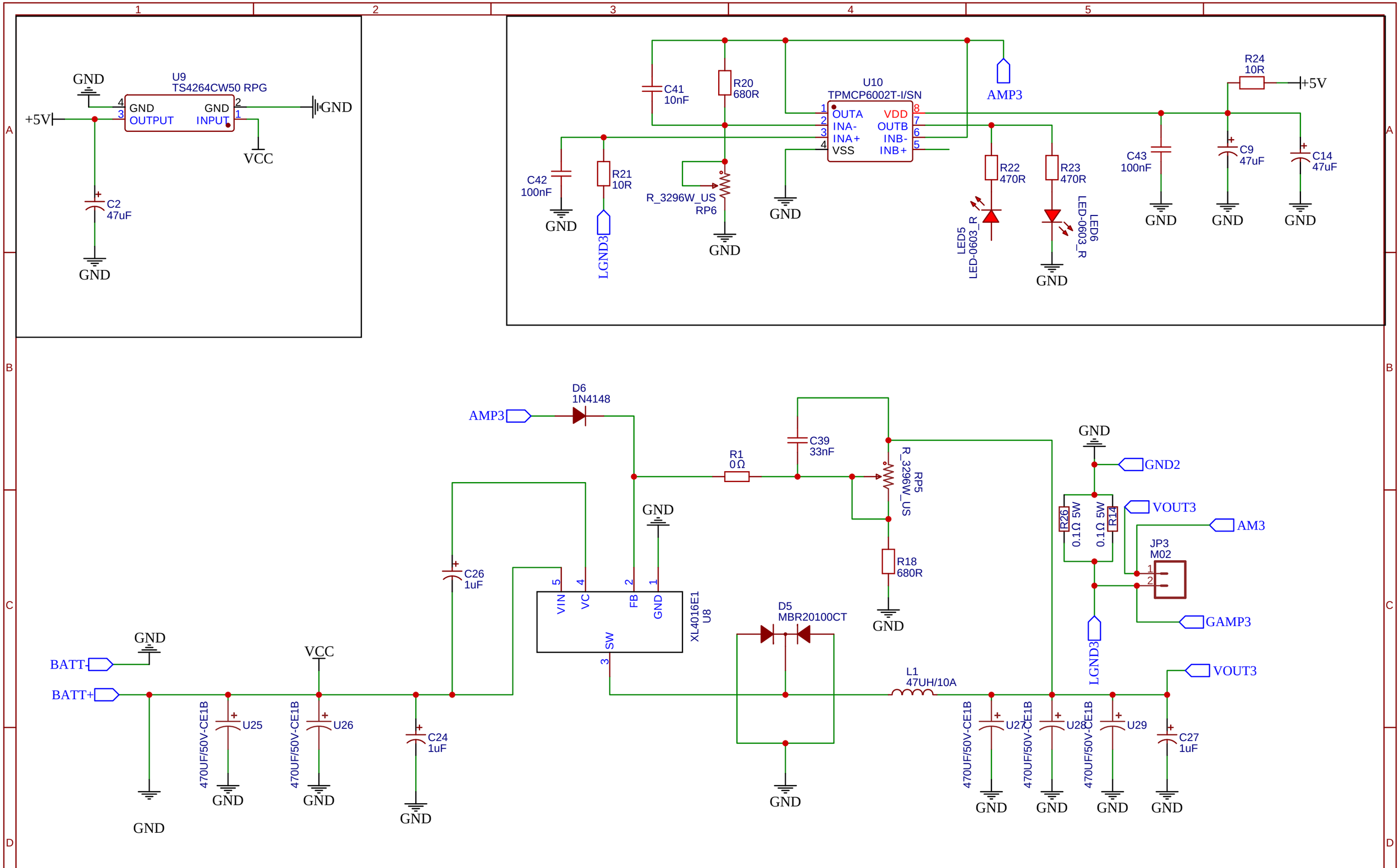

TITLE: Sheet_4	REV: 1.0
EasyEDA — Company: Your Company	Sheet: 1/1
Date: 2024-09-26	Drawn By: bijakarizki

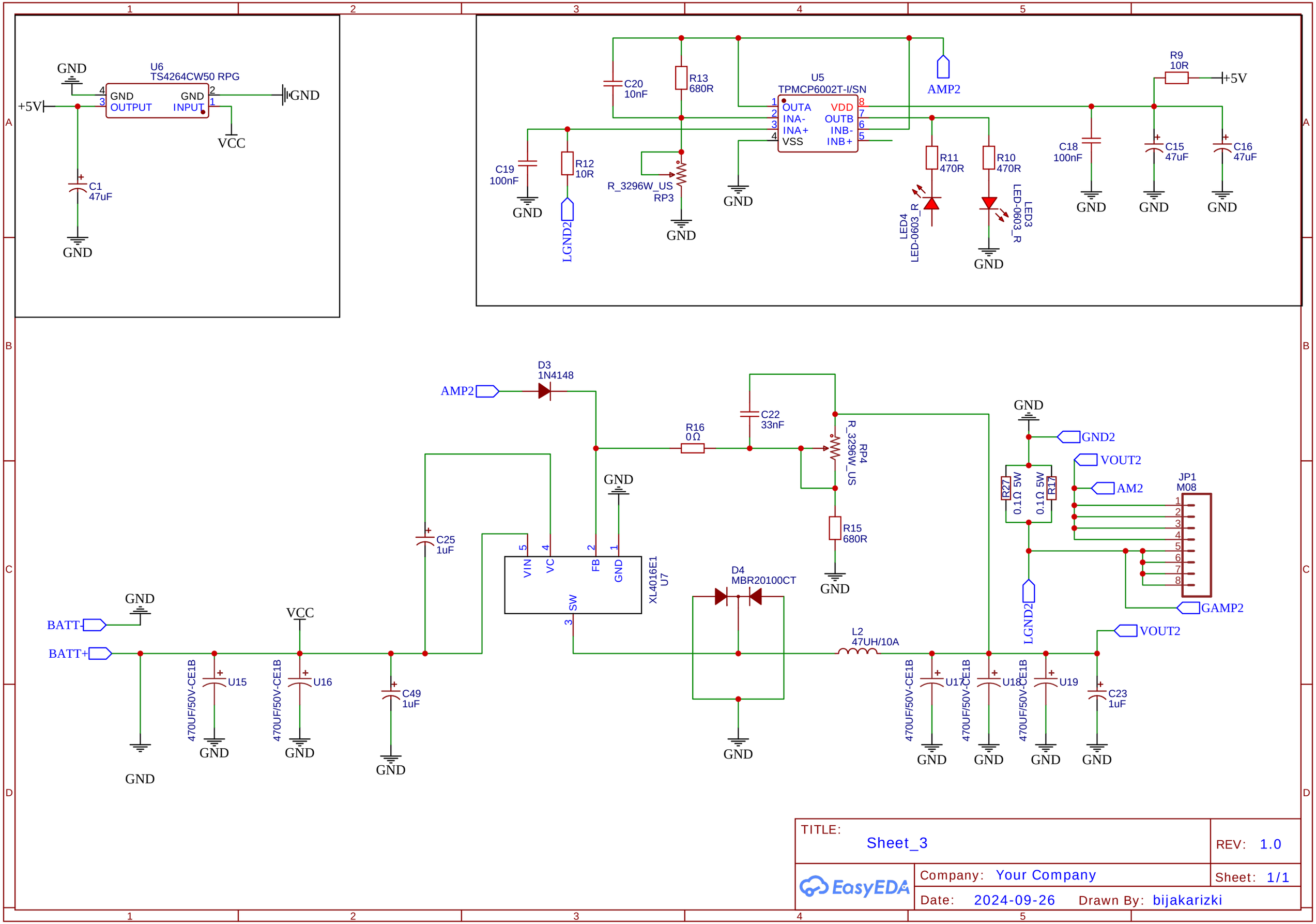

TITLE: Sheet_3	REV: 1.0
Company: Your Company	Sheet: 1/1
Date: 2024-09-26	Drawn By: bijakarizki