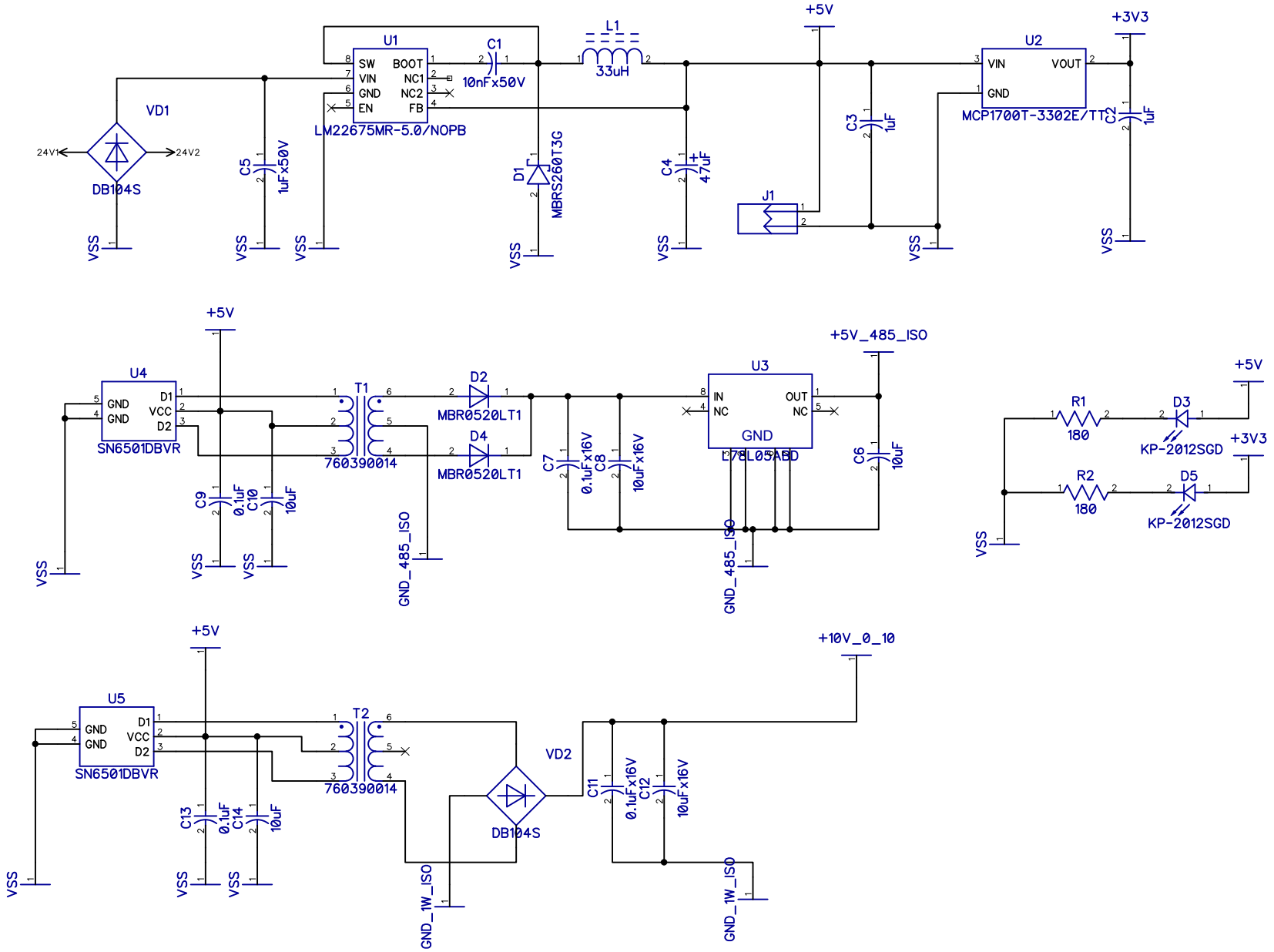
U1
SW
VIN
GND
EN
BOOT
NC1
NC2
FB
LM22675MR-5.0/NOPB
C1
10nFx50V
L1
33uH
+5V
U2
VIN
VOUT
GND
MCP1700T-3302E/TT
+3V3
C2
1uF
C3
1uF
C4
47uF
D1
MBRS260T3G
C5
1uFx50V
VD1
24V1
24V2
DB104S
J1
VSS
U4
GND
GND
D1
VCC
D2
SN6501DBVR
T1
760390014
D2
MBR0520LT1
D4
MBR0520LT1
C9
0.1uF
C10
10uF
GND_485_ISO
C7
0.1uFx16V
C8
10uFx16V
+5V_485_ISO
U3
IN
NC
OUT
NC
GND
L78L05ABD
C6
10uF
R1
180
D3
KP-2012SGD
R2
180
D5
KP-2012SGD
U5
SN6501DBVR
T2
760390014
C13
0.1uF
C14
10uF
VD2
DB104S
GND_1W_ISO
C11
0.1uFx16V
C12
10uFx16V
+10V_0_10

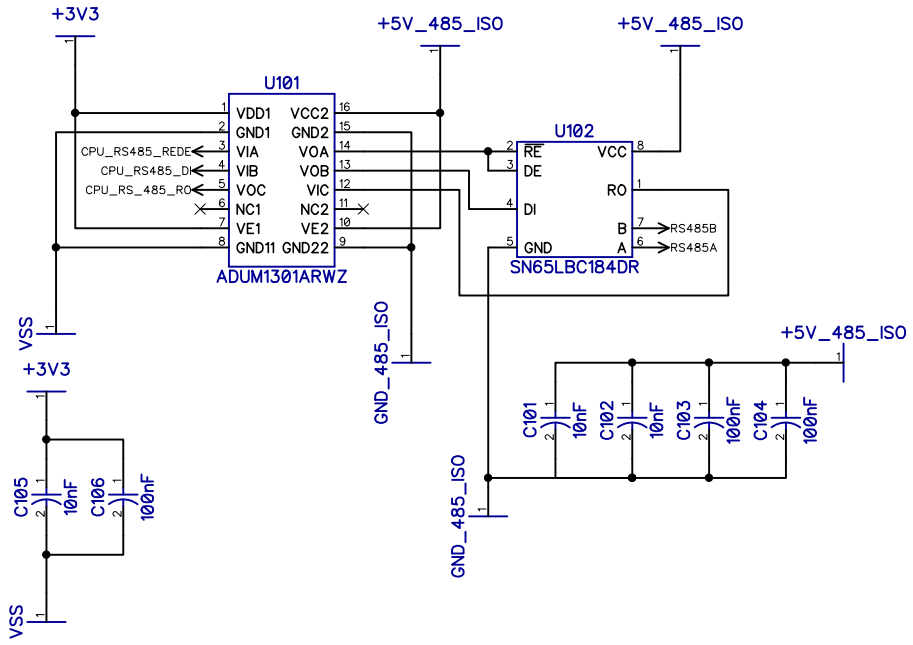
+3V3
+5V_485_ISO
+5V_485_ISO
U101
VDD1
GND1
VIA
VIB
VOC
NC1
VE1
GND11
VCC2
GND2
VOA
VOB
VIC
NC2
VE2
GND22
CPU_RS485_REDE
CPU_RS485_DI
CPU_RS_485_RO
ADUM1301ARWZ
U102
RE
DE
DI
GND
VCC
RO
B
A
RS485B
RS485A
SN65LBC184DR
VSS
GND_485_ISO
+5V_485_ISO
+3V3
C101
10nF
C102
10nF
C103
100nF
C104
100nF
GND_485_ISO
C105
10nF
C106
100nF
VSS

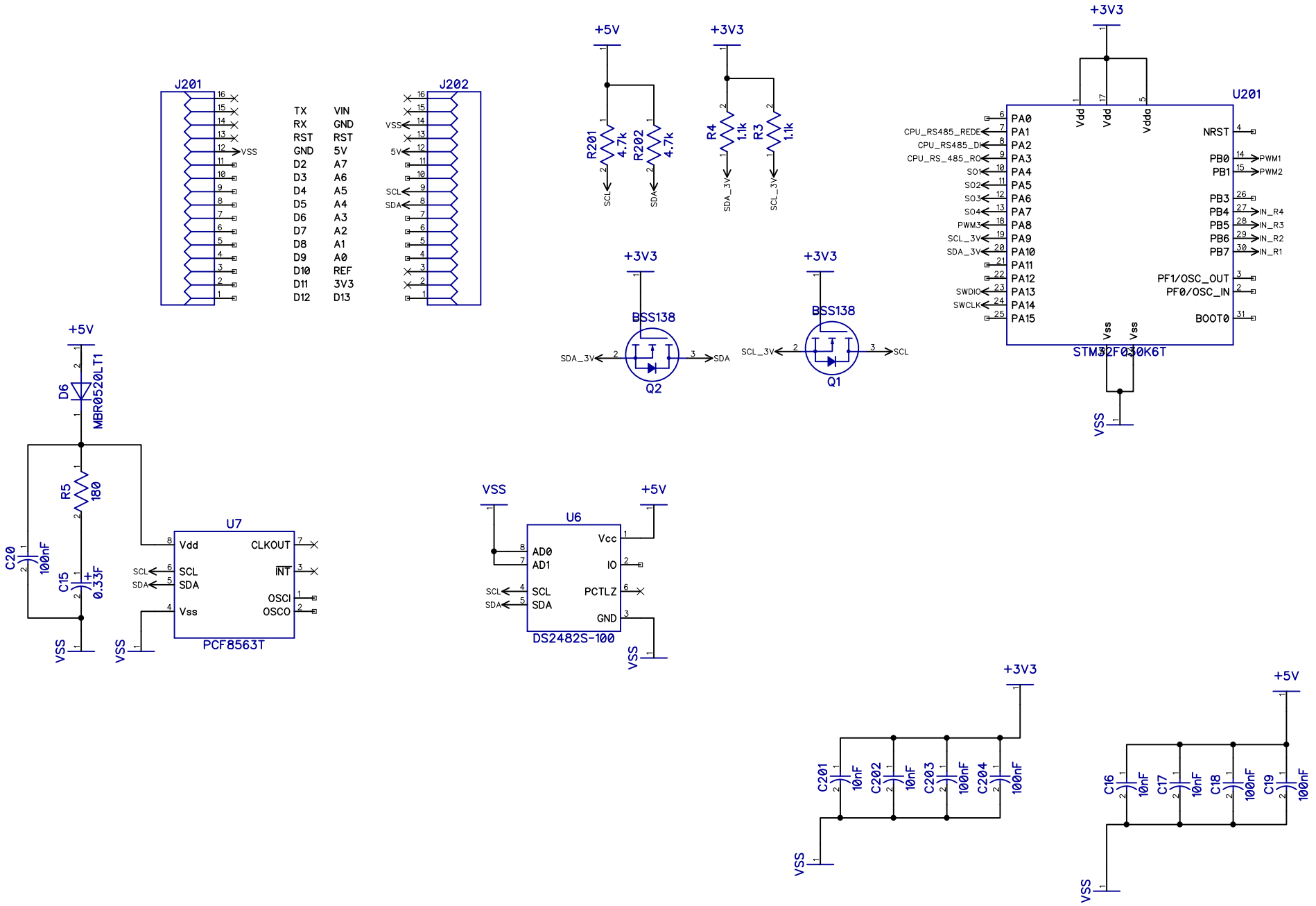
J201
J202
TX VIN
RX GND
RST RST
GND 5V
D2 A7
D3 A6
D4 A5
D5 A4
D6 A3
D7 A2
D8 A1
D9 A0
D10 REF
D11 3V3
D12 D13
VSS
5V
SCL
SDA
+5V
+3V3
R201 4.7k
R202 4.7k
R4 1.1k
R3 1.1k
SDA_3V
SCL_3V
BSS138
Q2
Q1
U201
STM32F030K6T
Vdd
Vdda
Vss
NRST
BOOT0
PF1/OSC_OUT
PF0/OSC_IN
PA0
PA1
PA2
PA3
PA4
PA5
PA6
PA7
PA8
PA9
PA10
PA11
PA12
PA13
PA14
PA15
CPU_RS485_REDE
CPU_RS485_DI
CPU_RS_485_RO
SO1
SO2
SO3
SO4
PWM3
SWDIO
SWCLK
PB0
PB1
PB3
PB4
PB5
PB6
PB7
PWM1
PWM2
IN_R4
IN_R3
IN_R2
IN_R1
D6
MBR0520LT1
R5
180
C20
100nF
C15
0.33F
U7
PCF8563T
CLKOUT
INT
OSCI
OSCO
U6
DS2482S-100
AD0
AD1
Vcc
IO
PCTLZ
GND
C201
10nF
C202
10nF
C203
100nF
C204
100nF
C16
10nF
C17
10nF
C18
100nF
C19
100nF

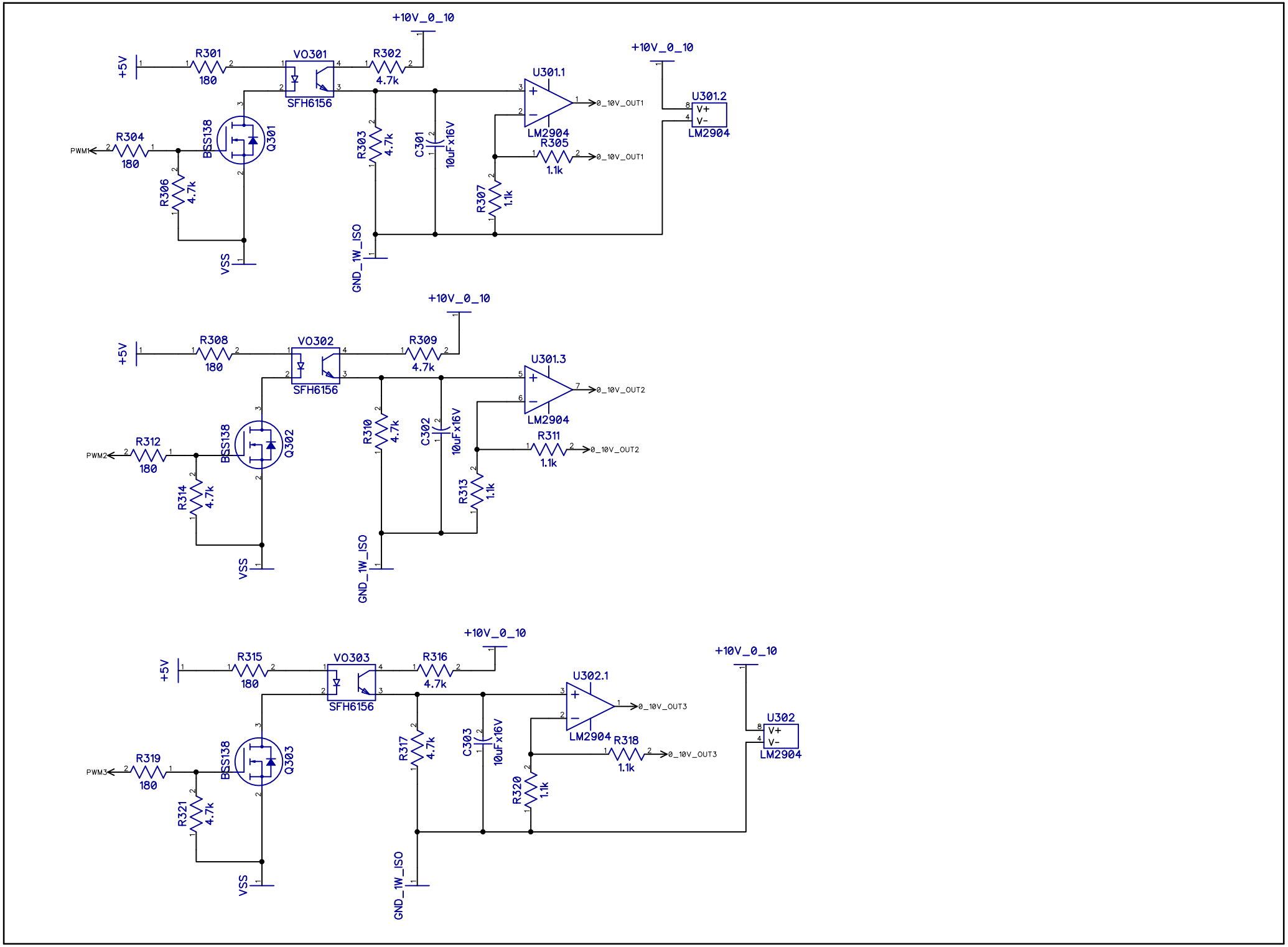
+10V_0_10
+5V
R301
180
VO301
SFH6156
R302
4.7k
U301.1
LM2904
0_10V_OUT1
U301.2
V+
V-
LM2904
PWM1
R304
180
BSS138
Q301
R306
4.7k
VSS
R303
4.7k
C301
10uFx16V
GND_1W_ISO
R305
1.1k
R307
1.1k
+10V_0_10
+5V
R308
180
VO302
SFH6156
R309
4.7k
U301.3
LM2904
0_10V_OUT2
PWM2
R312
180
BSS138
Q302
R314
4.7k
VSS
R310
4.7k
C302
10uFx16V
GND_1W_ISO
R311
1.1k
R313
1.1k
+10V_0_10
+5V
R315
180
VO303
SFH6156
R316
4.7k
U302.1
LM2904
0_10V_OUT3
U302
V+
V-
LM2904
PWM3
R319
180
BSS138
Q303
R321
4.7k
VSS
R317
4.7k
C303
10uFx16V
GND_1W_ISO
R318
1.1k
R320
1.1k

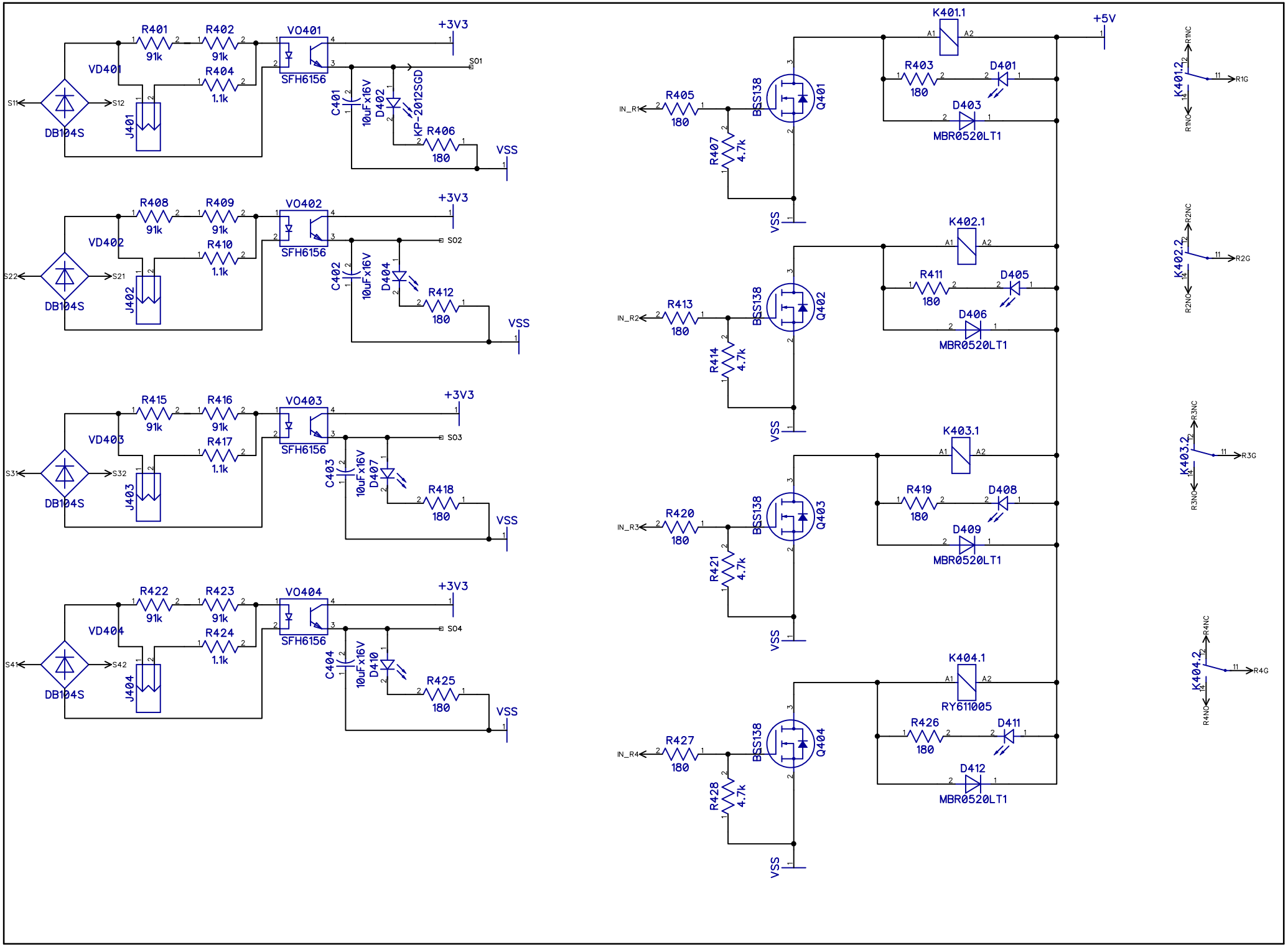
R401
91k
R402
91k
R404
1.1k
VO401
SFH6156
VD401
DB104S
J401
S11
S12
+3V3
SO1
C401
10uFx16V
D402
KP-2012SGD
R406
180
VSS
R408
91k
R409
91k
R410
1.1k
VO402
SFH6156
VD402
DB104S
J402
S22
S21
+3V3
SO2
C402
10uFx16V
D404
R412
180
VSS
R415
91k
R416
91k
R417
1.1k
VO403
SFH6156
VD403
DB104S
J403
S31
S32
+3V3
SO3
C403
10uFx16V
D407
R418
180
VSS
R422
91k
R423
91k
R424
1.1k
VO404
SFH6156
VD404
DB104S
J404
S41
S42
+3V3
SO4
C404
10uFx16V
D410
R425
180
VSS
K401.1
A1
A2
+5V
R403
180
D401
D403
MBR0520LT1
IN_R1
R405
180
R407
4.7k
BSS138
Q401
VSS
K401.2
R1NC
R1NO
R1G
K402.1
R411
180
D405
D406
MBR0520LT1
IN_R2
R413
180
R414
4.7k
BSS138
Q402
VSS
K402.2
R2NC
R2NO
R2G
K403.1
R419
180
D408
D409
MBR0520LT1
IN_R3
R420
180
R421
4.7k
BSS138
Q403
VSS
K403.2
R3NC
R3NO
R3G
K404.1
RY611005
R426
180
D411
D412
MBR0520LT1
IN_R4
R427
180
R428
4.7k
BSS138
Q404
VSS
K404.2
R4NC
R4NO
R4G

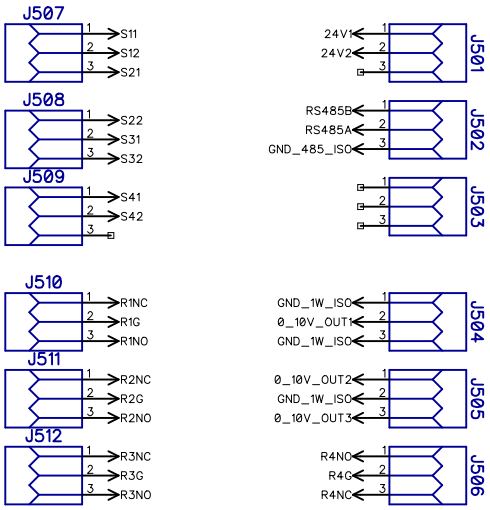
J507
1 S11
2 S12
3 S21
J508
1 S22
2 S31
3 S32
J509
1 S41
2 S42
3
J510
1 R1NC
2 R1G
3 R1NO
J511
1 R2NC
2 R2G
3 R2NO
J512
1 R3NC
2 R3G
3 R3NO
24V1 1
24V2 2
3
J501
RS485B 1
RS485A 2
GND_485_ISO 3
J502
1
2
3
J503
GND_1W_ISO 1
0_10V_OUT1 2
GND_1W_ISO 3
J504
0_10V_OUT2 1
GND_1W_ISO 2
0_10V_OUT3 3
J505
R4NO 1
R4G 2
R4NC 3
J506