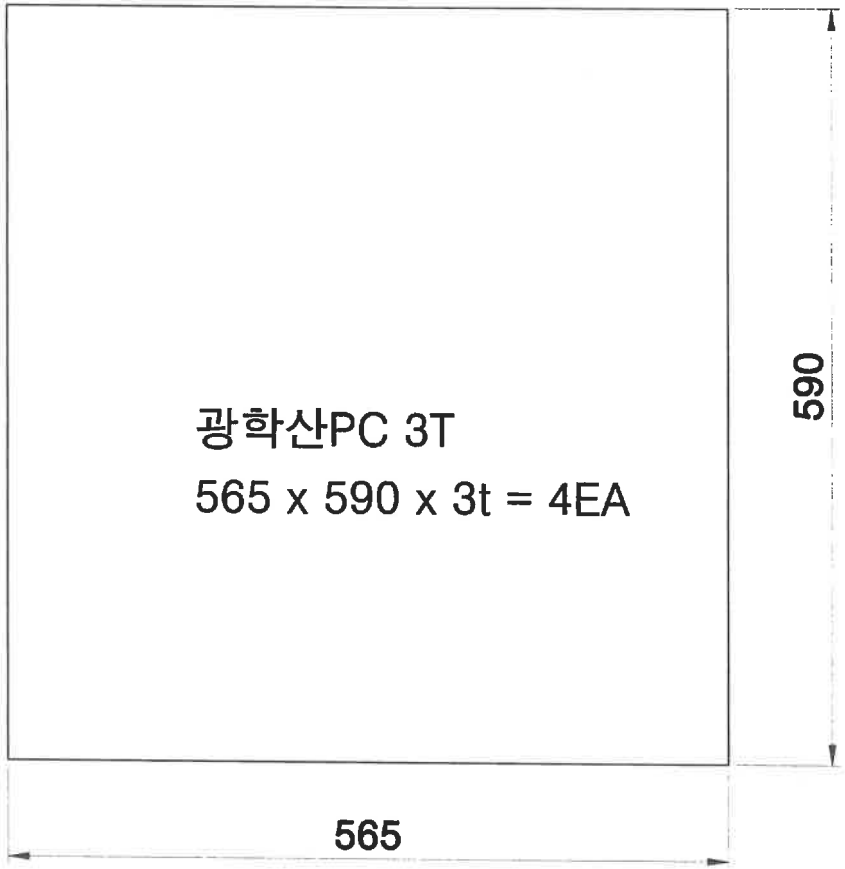

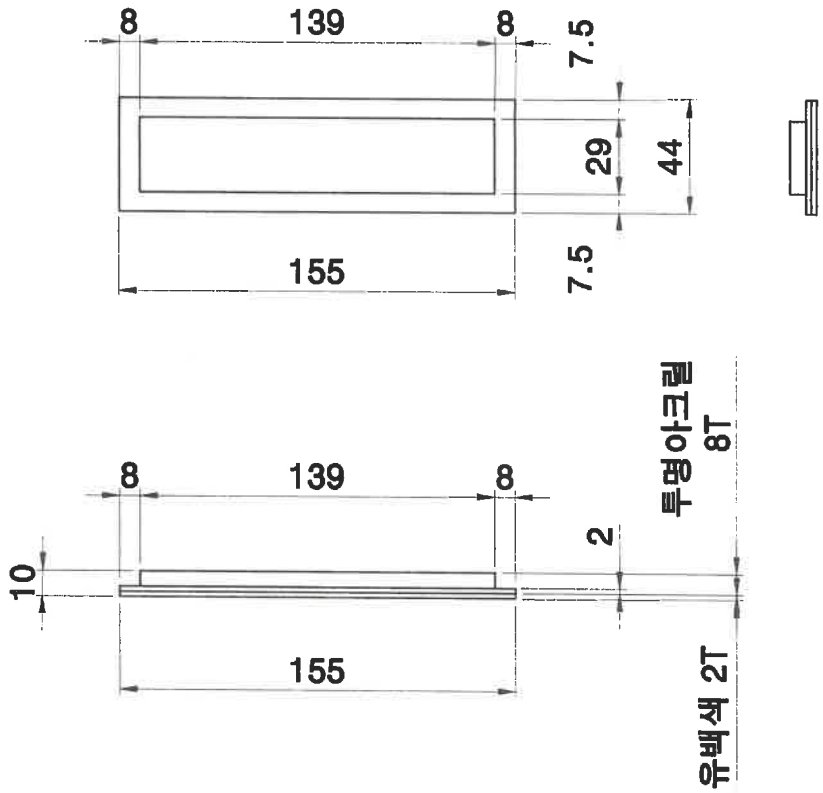

우성이크
1400x1350

Part Name : 조명판 아크릴
Mat.Spec : 광학산PC 3.0T
Size : 565 x 590 mm
Quantity : 4 EA

Part Name : 아크릴 블록 렌즈
Mat.Spec : 10T
Size : 155 x 44mm
Quantity : 6 EA

22

NO	DATE	REVISIONS	DEN	CHK	APR
△					
△					
△					
△					

TRACED BY	DRAWN BY	DESIGNED BY	CHECKED BY	REVIEWED BY	APPROVED BY

(주) 미래기업

SCALE	1 / 5
DATE	2024. 11. 13
ANGLE	
PROJECT	인도네시아 수출용
DWG. NAME	Light Case Ass'y
DWG. NO	MR-20241113-LC-05
SHEET	0