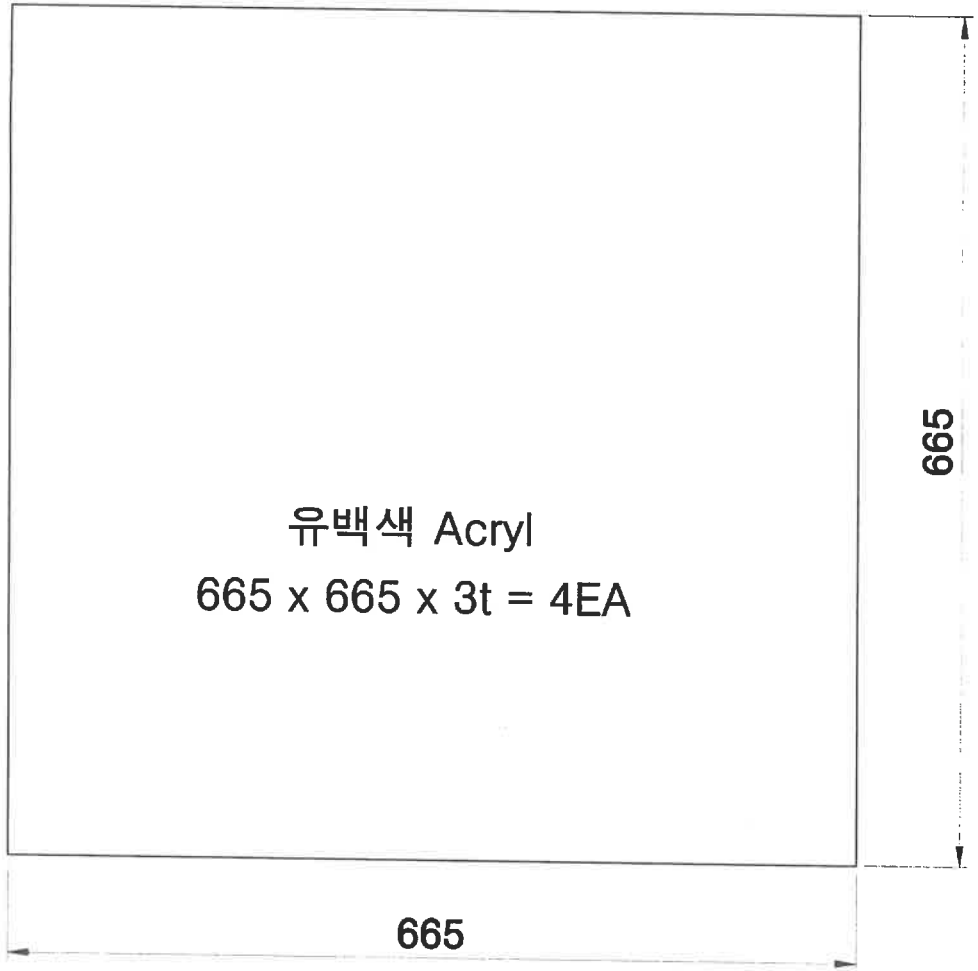

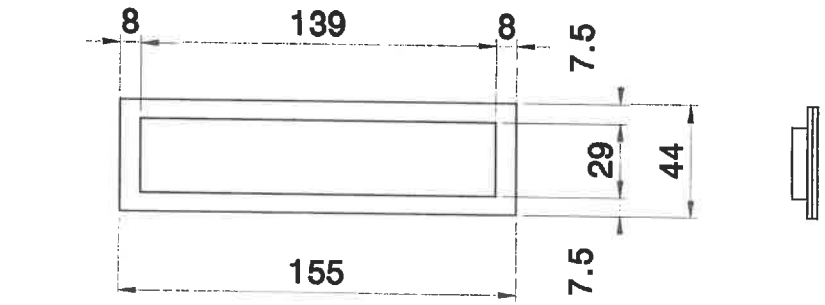

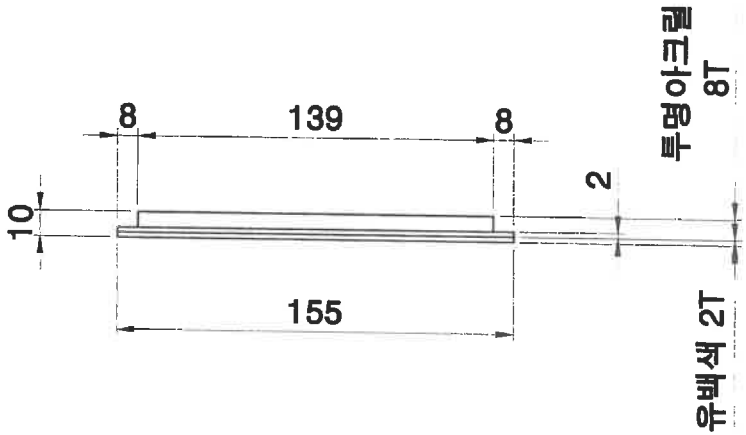

(ICES)
~~EST~~ 013
1600X1500

Part Name : 조명판 아크릴
Mat.Spec : 유백아크릴 3.0T
Size : 665 x 665 mm
Quantity : 4 EA

Part Name : 아크릴 블록 렌즈
Mat.Spec : 10T
Size : 155 x 44mm
Quantity : 6 EA

NO	DATE	REVISIONS	DEN	CHK	APR
△					
△					
△					
△					

TRACED BY	DRAWN BY	DESIGNED BY	CHECKED BY	REVIEWED BY	APPROVED BY

(주) 미래기업

SCALE	1 / 5
DATE	2024. 08. 14
ANGLE	
PROJECT	에코플랜트
DWG. NAME	Light Case Ass"y
DWG. NO	MR-20240814-LC-05
SHEET	0