M74 Ballast Water Management Systems

(Sept 2015)
(Rev.1
May 2016)
(Rev.2
June 2021)

1. Application

In addition to the requirements contained in BWM Convention (2004), the following requirements are applied to the installation of Ballast Water Management Systems.

This UR is not applied to ship's ballast water systems including piping valves, pumps, etc. where the BWMS is not fitted.

This UR is to be read in conjunction with IACS UR F45 - Installation of BWMS on-board ships.

2. Definitions

2.1 Ballast Water Management System (hereinafter referred to as ‘BWMS’) means any system which processes ballast water such that it meets or exceeds the Ballast Water Performance Standard in Regulation D-2 of the BWM Convention. The BWMS includes ballast water equipment, all associated piping arrangements as specified by the manufacturer, control and monitoring equipment and sampling facilities. The categorization of BWMS technologies is given in Table 1. Applicability of the requirements for each BWMS technology is in accordance with Table 2.

Notes:

1. This UR is to be uniformly implemented by IACS Societies for BWMS:

   i) For existing ships, where an application for approval for the plans of BWMS is made on or after 1 January 2017; or

   ii) For new ships contracted for construction on or after 1 January 2017.

2. Rev.1 of this UR is to be uniformly implemented by IACS Societies for BWMS:

   i) For existing ships, where an application for approval for the plans of BWMS is made on or after 1January 2017; or

   ii) For new ships contracted for construction on or after 1 January 2017.

3. The “contracted for construction” date means the date on which the contract to build the vessel is signed between the prospective owner and the shipbuilder. For further details regarding the date of “contract for construction”, refer to IACS Procedural Requirement (PR) No. 29.

4. Rev.2 of this UR is to be uniformly implemented by IACS Societies for BWMS:

   i) For existing ships, where an application for approval for the plans of BWMS is made on or after 1 July 2022; or

   ii) For new ships contracted for construction on or after 1 July 2022.

M74
(cont)

Table 1 - Categorization of BWMS technologies

BWMS's Technology category (informative Annex II should be referred to) →		**1**	**2**	**3a**	**3b**	**3c**	**4**	**5**	**6**	**7a**	**7b**	**8**
Characteristics ↓		In-line UV or UV + Advanced Oxidation Technology (AOT) or UV + TiO_2 or UV + Plasma	In-line Flocculation	In-line membrane separation and de-oxygenation (injection of N_2 from a N_2 Generator)	In-line de-oxygenation (injection of Inert Gas from Inert Gas Generator)	In-tank de-oxygenation with Inert Gas Generator	In-line full flow electrolysis	In-line side stream electrolysis (2)	In-line (stored) chemical injection	In-line side-stream ozone injection without gas/liquid separation tank and without Discharge treatment tank	In-line side-stream ozone injection with gas/liquid separation tank and Discharge water treatment tank	In-tank pasteurization and de-oxygenation with N_2 generator
Des-infection when ballasting	Making use of active substance		X			In-tank technology: No treatment when ballasting or de-ballasting	X	X	X	X	X	In-tank technology: No treatment when ballasting or de-ballasting
	Full flow of ballast water is passing through the BWMS	X	X	X	X		X				X	
	Only a small part of ballast water is passing through the BWMS to generate the active substance							X				
After-treatment de-when ballasting	Full flow of ballast water is passing through the BWMS	X									X	
	Injection of neutralizer						X	X	X	X	X	
	Not required by the Type Approval Certificate issued by the Administration		X	X								
Examples of dangerous gas as defined in UR M74 §2.3			(1)	O_2 N_2	CO_2 CO		H_2 Cl_2	H_2 Cl_2	(1)	O_2 O_3 N_2		O_2 N_2

Note:
(1) To be investigated on a case by case basis based on the result of the IMO (GESAMP) MEPC report for Basic and Final approval in accordance with the G9 Guideline.
(2) In-line side stream electrolysis may also be applied in-tank in circulation mode (no treatment when ballasting or de-ballasting)

Taking into consideration future developments of BWMS technologies, some additional technologies may be considered in this Table 1 by identifying their characteristics in the same manner as for the above BWMS categories 1, 2, 3a, 3b, 3c, 4, 5, 6, 7a, 7b and 8.

2.2 Cargo area of tankers is defined in:

- for tankers to which regulation 1.6.1 of SOLAS Chapter II-2 as amended by IMO resolutions up to MSC.421(98) (hereinafter the same) applies, regulation 3.6 of SOLAS Chapter II-2;

- for chemical tankers, Paragraph 1.3.6 of the IBC Code as amended by IMO resolutions up to MSC.460(101);

- for gas carriers, Paragraph 1.2.7 of the IGC Code as amended by IMO resolutions up to MSC.441(99); and

- for offshore support vessels, Paragraph 1.3.1 of the IMO Resolution A.673(16) as amended by Resolution MSC.236(82) or Paragraph 1.2.7 of the IMO Resolution A.1122(30), as applicable.

M74
(cont)

Table 2 - Applicability of the requirements for each BWMS technology

BWMS's Technology category (informative Annex II should be referred to)→	**1**	**2**	**3a**	**3b**	**3c**	**4**	**5**	**6**	**7a**	**7b**	**8**
UR M74 requirement ↓	In-line UV or UV + Advanced Oxidation Technology (AOT) or UV + TiO_2 or UV + Plasma	In-line Flocculation	In-line membrane separation and de-oxygenation (injection of N_2 from a N_2 Generator)	In-line de-oxygenation (injection of Inert Gas from Inert Gas Generator)	In-tank de-oxygenation with Inert Gas Generator	In-line full flow electrolysis	In-line side stream electrolysis	In-line (stored) chemical injection	In-line side-stream ozone injection without gas/liquid separation tank and without Discharge treatment tank	In-line side-stream ozone injection with gas/liquid separation tank and Discharge water treatment tank	In-tank pasteurization and de-oxygenation with N_2 generator
1. and 2.	x	x	x	x	x	x	x	x	x	x	x
3.1.1 to 3.1.4	x	x	x	x	x	x	x	x	x	x	x
3.1.5			x	x	x						x
3.1.6	x	x	x	x	x	x	x	x	x	x	x
3.1.7			x	x	x						x
3.1.8				x						x	
3.1.9	x	x	x	x	x	x	x	x	x	x	x
3.2.1.1				x	x				x	x	
3.2.1.2						x	x	x			
3.2.2	x	x	x	x		x	x	x	x	x	
3.2.3	x	x	x	x	x	x	x	x	x	x	x
3.2.4	x	x	x	x		x	x	x	x	x	
3.3.1.1		x	x			x	x	x	x	x	x
3.3.1.2			x	x	x				x	x	x
3.3.1.3									x	x	
3.3.1.4						x	x	x	x	x	
3.3.1.5						x	x	x			
3.3.1.6			x	x	x				x	x	x
3.3.2.1 to 3.3.2.4		x	x	x	x	x	x	x	x	x	x
3.3.2.5			x			x	x	x	x	x	x
3.3.2.6			x						x	x	x
3.3.2.7			x			x	x	x	x	x	x
3.3.3		x				x	x	x	x	x	
3.3.4						x	x	x	x	x	

M74
(cont)

2.3 Dangerous gas means any gas which may develop an atmosphere being hazardous to the crew and/or the ship due to flammability, explosivity, toxicity, asphyxiation, corrosivity or reactivity and for which due consideration of the hazards is required, e.g. hydrogen (H_2), hydrocarbon gas, oxygen (O_2), carbon dioxide (CO_2), carbon monoxide (CO), ozone (O_3), chlorine (Cl_2) and chlorine dioxide (ClO_2), etc.

2.4 Dangerous liquid means any liquid that is identified as hazardous in the Material Safety Data Sheet or other documentation relating to this liquid.

2.5 Hazardous area is defined in IEC 60092-502:1999 and means an area in which an explosive gas atmosphere is or may be expected to be present, in quantities such as to require special precautions for the construction, installation and use of electrical apparatus. When a gas atmosphere is present, the following hazards may also be present: toxicity, asphyxiation, corrosivity and reactivity.

2.6 Non-hazardous area means an area which is not a hazardous area as defined in above 2.5.

3. Installation

3.1 General requirements

3.1.1 All valves, piping fittings and flanges are to comply with the relevant requirements of IACS UR P2 and P4. In addition, special consideration can be given to the material used for this service with the agreement of Society.

3.1.2 The BWMS is to be provided with by-pass or override arrangement to effectively isolate it from any essential ship system to which it is connected. For new installation or retrofit to existing ships, under normal operating conditions of ballasting and de-ballasting given in the Ballast Water Management Plan (BWMP) the adequacy of the generating plant capacity installed on the vessel is to be demonstrated by an electrical load analysis.

For retrofit installation to exiting ships, a revised electrical load analysis with preferential trips of non-essential services can be accepted.

3.1.3 The BWMS is to be operated in accordance with the requirements specified in the Type Approval Certificate (TAC) issued by the Flag Administration. BWMS should be operated within its Treatment Rated Capacity (TRC) as per the TAC. This may require limiting of ship's ballast pump flowrates.

The arrangement of the bypasses or overrides of the BWMS is to be consistent with the approved Operation Maintenance and Safety Manual by the Flag Administration's Type Approval.

In case the maximum capacity of the ballast pump(s) exceeds the maximum treatment rated Capacity (TRC) of the BWMS specified in the TAC issued by the Flag Administration, there should be a limitation on the BWMP giving a maximum allowable flow rate for operating the ballast pump(s) that shall not exceed the maximum TRC of the BWMS.

3.1.4 BWMS should be subject to design review by the Classification Society to verify the compliance of the BWMS's manufacturer package with the Classification Rules. Manufacturers of the BWMS may apply for this design review at the type approval process.

In general, monitoring functions of BWMS belongs to system category I under the application of the UR E22 Rev. 2. However, in case a by-pass valve is integrated in the valve remote

M74
(cont)

control system, the by-pass valve belongs to the system category II Ballast transfer remote control system.

The BWMS's components are required to be inspected and certified by the Classification Society at the manufactory (Society Certificate (SC) as defined in UR M72) including pressure vessels, piping class I or II, filters, switchboards, etc.

3.1.5 Where a vacuum or overpressure may occur in the ballast piping or in the ballast piping or in the ballast tanks due to the height difference or injection of inert gas or nitrogen (N_2), a suitable protection device is to be provided (i.e. P/V valves, P/V breakers, P/V breather valves or pressure safety relief valve or high/low pressure alarms).
The pressure and vacuum settings of the protection device should not exceed the design pressure of the ballast piping (BWMS categories 3a and 3b) or ballast tank (BWMS categories 3a, 3b and 3c), as relevant.

For BWMS categories 3a, 3b and 3c, the inert gas or nitrogen product enriched air from the inert gas system and from the protection devices installed on the ballast tanks (i.e. P/V valves, P/V breakers or P/V breather valves) are to be discharged to a safe location*(1) & (2) on the open deck.

When the concerned ballast tanks are hazardous areas, an extension of hazardous area is to be considered at the outlet of the protection devices: with reference to IEC 60092-502:1999 §4.2.2.9 the areas on open deck, or semi-enclosed spaces on open deck, within 1.5 m of their outlets are to be categorized hazardous zone 1 and with reference to IEC 60092-502:1999 §4.2.3.1, an additional 1.5 m surrounding the 1.5 m hazardous zone 1 is to be categorized hazardous zone 2. Any source of ignition such as anchor windlass or opening into chain locker should be located outside the hazardous areas.

Footnotes **safe location*(1)** and **safe location*(2)**

Safe location needs to address the specific types of discharges separately.

Signboards or similar warnings at the discharge areas are to be provided.

Safe location*(1): inert gas or nitrogen product enriched air from:

- in-line (categories 3a and 3b) and in-tank (categories 3c and 8) de-oxygenation BWMS: the protection devices installed on the ballast tanks, nitrogen or inert gas generators, nitrogen buffer tank (if any); or
- in-line ozone injection BWMS (categories 7a and 7b): the oxygen generator;

safe locations on the open deck are:

- not within 3 m of areas traversed by personnel; and
- not within 6 m of air intakes for machinery (engines and boilers) and all ventilation inlets/outlets.

Safe location*(2): oxygen-enriched air from:

- in-line and in-tank de-oxygenation BWMS (categories 3a and 8): the nitrogen generator; or
- in-line ozone injection BWMS (categories 7a and 7b): the protection devices or vents from oxygen generator, compressed oxygen vessel, the ozone generator and ozone destructor devices;

safe locations on the open deck are:

- outside of hazardous area;
- not within 3 m of any source of ignition and from deck machinery, which may include anchor windlass and chain locker openings, and equipment which may constitute an ignition hazard;
- not within 3 m of areas traversed by personnel; and
- not within 6 m of air intakes for machinery (engines and boilers) and all ventilation inlets.

M74 (cont)

Where products covered by IEC 60092-502:1999 are stored on-board or generated during operation of the BWMS, the requirements of this standard shall be followed in order to:

- Define hazardous areas and acceptable electrical equipment, and

- Design ventilation systems.

3.1.6 Electric and electronic components are not to be installed in a hazardous area unless they are of certified safe type for use in the area. Cable penetrations of decks and bulkheads are to be sealed when a pressure difference between the areas is to be maintained.

3.1.7 Inert gas systems installed for de-oxygenation BWMS (categories 3a, 3b, 3c and 8) are to be designed in accordance with the following requirements:

3.1.7.1 FSS Code Ch 15 requirements

- 2.1.2, 2.1.3

- 2.2.1.3, 2.2.1.4, 2.2.2.1, 2.2.2.2, 2.2.2.3, 2.2.2.6, 2.2.4.1, 2.2.4.2, 2.2.4.3, 2.2.4.4, 2.2.4.5 except 2.2.4.5.1.3 and 2.2.4.5.3

- 2.3.1.1.2, 2.3.1.2, 2.3.1.4.2, 2.3.1.5, 2.3.1.6, 2.3.2 except 2.3.2.2.1

- 2.4.1.3, 2.4.1.4 and 2.4.2

- For inert gas systems installed for in-tank de-oxygenation BWMS (category 8): 2.2.3.1, 2.2.3.2 except 2.2.3.2.6, 2.2.3.2.7 and 2.2.3.2.10

In general, when applying FSS Code Ch.15 requirements to inert-gas based BWMS, the following modifications are to be considered:

- The terms "cargo tank" and "cargo piping" are to be replaced by "ballast water tank" or "ballast water piping" as relevant.

- The term "cargo control room" is to be replaced by "BWMS control station" as relevant

- Requirements for slop tanks on combination carriers are to be disregarded

- When applying FSS Code / 15.2.2.4.5.1.1, the acceptable oxygen content is to be specified by the manufacturer, 5% oxygen content need not necessarily be applied.

3.1.7.2 IACS UR F20 requirements F20.1.1.1, F20.1.1.3, F20.3.1, F20.3.3, F20.3.7, F20.3.8, F20.4.4, F20.4.5 and F20.4.6. In applying F20.4.6, the terms “cargo tanks” and “cargo piping” are to be understood as “ballast tanks” and “ballast piping” respectively. For de-oxygenation BWMS (categories 3a, 3b, 3c and 8), the requirements in 3.1.7.1 prevail.

3.1.8 When cavitation is the BWMS treatment process (for example by use of pressure vacuum reactor working in combination with a vertical ballast water drop line) or part of the BWMS treatment process (for example by use of “smart pipe” or “special pipe” in BWMS category 7b or by use of “venturi pipe” in BWMS technology 3b) or by use other means, the design and the wall thickness or grade of materials or inside coating or surface treatment of the part of the piping where the cavitation is taking place is to be specifically considered.

M74 (cont)

3.1.9 When it is required to have an automatic shutdown of the BWMS for safety reasons, this must be initiated by a safety system independent of the BWM control system.

3.2 Additional requirements for tankers:

3.2.1 Hazardous area classification is to be in accordance with IEC 60092-502:1999 with due consideration of IACS UI SC274.

.1 BWMS using ozone generators (categories 7a and 7b) and de-oxygenation BWMS using inert gas generator by treated flue gas from main or auxiliary boilers or gas from an oil or gas-fired gas generator (categories 3b and 3c) are to be located outside the cargo area in accordance with FSS Code Ch 15 §2.3.1.1.2.

Note: this requirement does not apply to inert gas generators for which FSS Code Ch 15/2.4.1 and IACS UR F20.3 and F20.4 apply.

.2 In-line full flow electrolysis BWMS (category 4), in-line side-stream electrolysis BWMS (category 5) and in-line injection BWMS using chemical which is stored onboard (category 6) can be located inside the hazardous areas with due consideration of the requirement of 3.1.6 but should not be located inside the cargo pump room unless it is demonstrated by the BWMS manufacturer that the additional hazards that could be expected from dangerous liquids and dangerous gases stored or evolved from the BWMS (for example H_2 generation):

- do not lead to an upgrade of the hazardous area categorization of the cargo pump room,
- are not reactive with the cargo vapours expected to be present in the cargo pump room,
- are not reactive with the fire-extinguishing medium provided inside the cargo pump room,
- are not impacting the performance of the existing fire-fighting systems provided inside the cargo pump room, and
- are not introducing additional hazards inside the cargo pump room such as toxicity hazards that would not have been prior addressed by suitable counter measures.

Notes:
1) In-line full flow electrolysis BWMS (category 4) could be accepted in cargo compressor rooms of liquefied gas carriers and inside cargo pump rooms of oil tankers or chemical tankers if that cargo pump room is located above the cargo tank deck.
2) For submerged cargo pumps, the room containing the hydraulic power unit or electric motors is not to be considered as the “cargo pump room”.
3) Ballast pump rooms and other pump rooms not containing the cargo pumps are not to be considered as the “cargo pump room”.

3.2.2 In general, two independent BWMS should be required i.e. one for ballast tanks located within the cargo area and the other one for ballast tanks located outside cargo area. Specific arrangements where only one single In-line BWMS (categories 1, 2, 3a, 3b, 4, 5, 6, 7a and 7b) could be accepted are given in Annex I.

M74
(cont)

Note: When the Fore Peak Tank is ballasted with the piping system serving the other ballast tanks within the cargo area in accordance with IACS UR F44, the ballast water of the Fore Peak tank is to be processed by the BWMS processing the ballast water of the other ballast tanks within the cargo area.

3.2.3 Isolation between ballast piping serving the ballast tanks inside and outside of the cargo area is to be in accordance with the following requirements:

3.2.3.1 Interconnection in between the ballast piping serving the ballast tanks located within the cargo area and the ballast piping serving the ballast tanks located outside the cargo area may be accepted if appropriate isolation arrangement is provided in accordance with Annex I is applied.

Note 1: The means of appropriate isolation described in Paragraph 3.2.3.1 is necessary for the interconnection specified in said Paragraph regardless of the diameter of the piping.

Note 2: As indicated in Annex I, the means of appropriate isolation described in Paragraph 3.2.3.1 is necessary for the interconnection specified in said Paragraph in the case of the active substance piping such as N2 gas piping, inert gas piping, neutralizer piping, fresh water piping for filter cleaning, compressed air piping for remaining water purge and sea water piping for adjusting the salinity etc. At the discretion of the Classification Society and for active substance piping and neutralizer piping (both up to 2 inches) only, alternative isolation arrangements, provided preferably on the open deck, offering enhanced safety and gastightness may be considered for penetration of the bulkhead separating the non-hazardous machinery space from a hazardous area (such as the cargo pump room) at as high an elevation in the machinery space as possible, preferably, just below the main deck. The arrangements are to provide suitable protection measures in addressing the pollution hazards and safety concerns due to the potential migration of hydrocarbon or flammable or toxic liquids or vapours from the hazardous areas.

Note 3: The means of appropriate isolation described in this Paragraph 3.2.3.1 for the interconnection specified in said Paragraph need not be applied to the sampling lines described in Paragraph 3.2.4.

The means of appropriate isolation is to be one of the following :

.1 Two non-return valves with positive means of closing in series with a spool piece (also mentioned “means of dis-connection” in Annex I), or

Note: As an alternative to positive means of closure, an additional valve having such means of closure may be provided between the non-return valve and the spool piece.

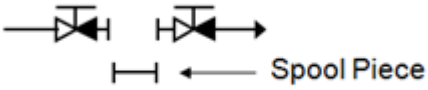

.2 Two non-return valves with positive means of closing in series with a liquid seal at least 1.5 m in depth, or

Note 1: As an alternative to positive means of closure, an additional valve having such means of closure may be provided between the non-return valve and the liquid seal.

Note 2: For ships operating in cold weather conditions, freeze protection should be provided in the water seal. A portable heating system can be accepted for this purpose.

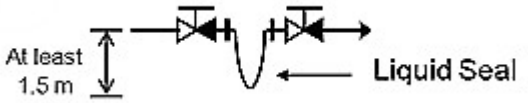

.3 Automatic double block and bleed valves and a non-return valve with positive means of closing.

Note: As an alternative to positive means of closure, an additional valve having such means of closure may be provided after the non-return valve.

M74
(cont)

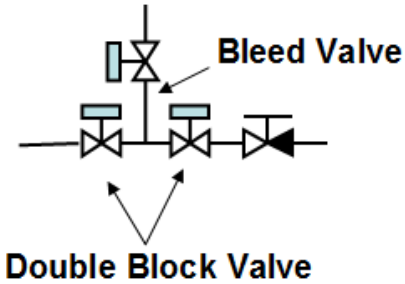

3.2.3.2 The above-mentioned means of appropriate isolation is to be provided on the open deck in the cargo area.

Note: When the Fore Peak Tank is ballasted with the piping system serving the other ballast tanks within the cargo area in accordance with IACS UR F44, the means of appropriate isolation described in Paragraphs 3.2.3.1 and 3.2.3.2 is not required in between the Fore Peak Tank and the common ballast water piping serving the other ballast water tanks within the cargo area.

3.2.4 Sampling lines which are connected to the ballast water piping system serving the tanks in the cargo area and provided for the purpose of the following:

- for any BWMS: ballast water sampling required by the G2 Guideline of the BWM Convention (2004), or

- for BWMS technologies categories 4, 5, 6, 7a and 7b: total residual oxidant (TRO) analysis in closed loop system;

are not to be led into a non-hazardous enclosed space outside the cargo area.

However, the sampling lines may lead into a non-hazardous enclosed space outside the cargo area provided the following requirements are fulfilled:

.1 The sampling facility (for BWMS monitoring/control) is to be located within a gas tight enclosure (hereinafter, referred to as a ‘cabinet’), and the following i) through iv) are to be complied.

i) In the cabinet, a stop valve is to be installed on each sampling line.

ii) Gas detection equipment is to be installed in the cabinet and the valves specified in i) above are to be automatically closed upon activation of the gas detection equipment.

iii) Audible and visual alarm signals are to be activated both locally and at the BWMS control station when the concentration of explosive gases reaches a pre-set value, which should not be higher than 30% of the lower flammable limit (LFL). Upon an activation of the alarm, all electrical power to the cabinet is to be automatically disconnected.

Note: when the electrical equipment is of a certified safety type, the automatic disconnection of power supply is not required.

iv) The cabinet is to be vented to a safe location in non-hazardous area on open deck and the vent is to be fitted with a flame arrester.

.2 The standard internal diameter of sampling pipes is to be the minimum necessary in order to achieve the functional requirements of the sampling system.

M74
(cont)

.3 The cabinet is to be installed as close as possible to the bulkhead facing the cargo area, and the sampling lines located outside the cargo area are to be routed on their shortest ways.

.4 Stop valves are to be located in the non-hazardous enclosed space outside the cargo area, in both the suction and return lines close to the penetrations through the bulkhead facing the cargo area. A warning plate stating "Keep valve closed when not performing measurements" is to be posted near the valves. Furthermore, in order to prevent backflow, a water seal or equivalent arrangement is to be installed on the hazardous area side of the return pipe.

.5 A stop valve is to be installed on the cargo area for each sampling line (i.e. both the suction and return lines).

.6 The samples which are extracted from the ballast water piping system serving the tanks within the cargo area are not to be discharged to a tank located outside the cargo area and not to discharge to a piping line supplying the spaces located outside the cargo area.

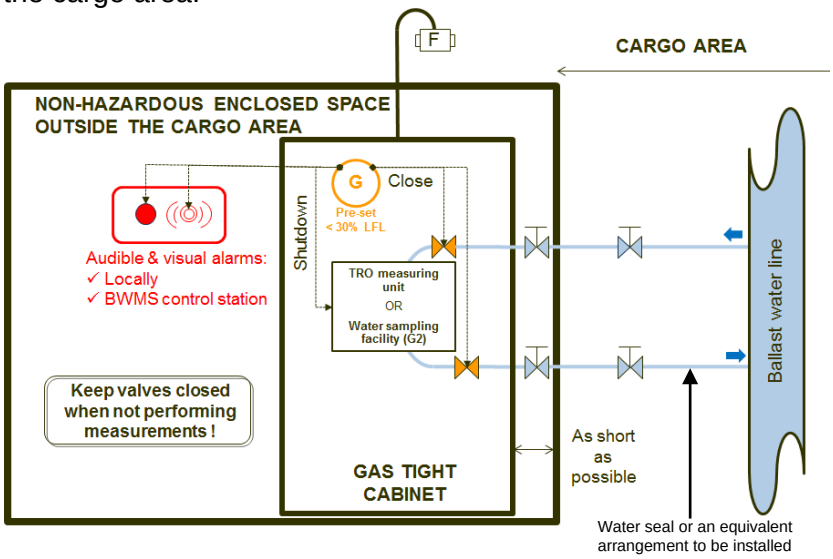

3.3 Special requirements for BWMS categories 2, 3a, 3b, 3c, 4, 5, 6, 7a, 7b and 8 generating dangerous gas or dealing with dangerous liquids.

3.3.1 Where the operating principle of the BWMS involves the generation of a dangerous gas, the following requirements are to be satisfied:

.1 Gas detection equipment is to be fitted in the spaces where dangerous gas could be present, and an audible and visual alarm is to be activated both locally and at the BWMS control station in the event of leakage.

The gas detectors should be located as close as possible to the BWMS components where the dangerous gas may accumulate.

For flammable gases and explosive atmosphere including but not limited to H_2, the construction, testing and performance of the gas detection devices is to be in accordance with IEC 60079-29-1:2016, IEC 60079-29-2:2015, IEC 60079-29-3:2014 and/or IEC 60079-29-4:2009, as applicable.

M74
(cont)

Where other hazards are considered like toxicity, asphyxiation, corrosive and reactivity hazards, a recognized standard acceptable to the Society is to be selected with due consideration of the specific gases to be detected and due consideration of the performance of the detection device with regards to the specific atmosphere where it is used.

.2 In spaces where inert gas generator systems are fitted (BWMS categories 3b and 3c) or nitrogen generators are fitted (BWMS categories 3a and 8), at least two oxygen sensors shall be positioned at appropriate locations (as required by Paragraph 2.2.4.5.4 of Chapter 15 of the FSS Code as amended by IMO resolutions up to MSC.410(97)) to alarm when the oxygen level falls below 19%. The alarms shall be both audible and visual and shall be activated:

- inside the space;
- at the entry into the space; and
- inside the BWMS control station.

For BWMS categories 7a and 7b, at least two oxygen sensors shall be positioned at appropriate locations in the following spaces:

- spaces where ozone generators are fitted, or
- spaces where ozone destructors are fitted, or
- spaces where ozone piping is routed;

to alarm when the oxygen level raises above 23 %. The alarms shall be both audible and visual and shall be activated at the following locations:

- inside the space; and
- at the entry into the space; and
- inside the BWMS control station.

Automatic shut-down of the BWMS is to be arranged when the oxygen level raises above 25%. Audible and visual alarms independent from those specified in the preceding paragraph are to be activated prior to this shut-down.

.3 For BWMS categories 7a and 7b, at least one ozone sensor shall be provided at the vicinity of the discharge outlet to the open deck from the ozone destructors addressed in Footnote *(4) to alarm when the ozone concentration level raises above 0.1 ppm. The alarms shall be both audible and visual and shall be activated in the BWMS control room. In addition, at least two ozone sensors shall be positioned at appropriate location in the following spaces:

For ***(4)**, refer to footnotes to Paragraph 3.3.2.3.

M74
(cont)

- spaces where ozone generators are fitted, or
- spaces where ozone destructors are fitted, or
- spaces where ozone piping is routed;

to alarm when the ozone concentration level raises above 0.1 ppm. The alarms shall be both audible and visual and shall be activated at the following locations:

- inside the space;
- at the entry into the space; and
- inside the BWMS control station.

Automatic shut-down of the BWMS is to be arranged when the ozone concentration measured from one of the two sensors inside the space raises above 0.2 ppm.

.4 Inside double walled spaces or pipe ducts constructed for the purpose of 3.3.2.1 Note 1), sensors are to be provided for the detection of H_2 leakages (BWMS categories 4, 5 and 6 when relevant) or O_2 leakages (BWMS categories 7a and 7b) or O_3 leakages (BWMS categories 7a and 7b). The sensors are to activate an alarm at the high level settings and automatic shut-down of the BWMS at the high-high level settings described in above 3.3.1.1 to 3.3.1.3.

Note: As an alternative to the sensor for the gas detection, monitored under-pressurization inside the double walled spaces or pipe ducts could be provided with an automatic alarm and shut-down of the BWMS in case of loss of the under-pressurization. The monitoring can be achieved either by monitoring the pressure inside the double walled spaces or pipe ducts or by monitoring the exhaust fan.

.5 For in-line full flow electrolysis BWMS (category 4), in-line side-stream electrolysis BWMS (category 5) and in-line injection BWMS using chemical which is stored onboard (category 6): the hydrogen de-gas arrangement (when provided) is to be provided with redundant ventilation fans and redundant monitoring of the ventilation system.

In addition the ventilation fan shall be certified explosion proof and have spark arrestor to avoid ignition sources to enter the ventilation systems whereas remaining H2 gas may be present in dangerous concentrations.

Audible and visual alarms and automatic shut-down of the BWMS are to be arranged for respectively high and high-high levels of H_2 concentration. The open end of the hydrogen by-product enriched gas relieving device is to be led to a safe location*(3) on open deck.

.6 The open end of inert gas or nitrogen gas enriched air (BWMS categories 3a, 3b, 3c and 8) or oxygen-enriched air (BWMS categories 3a, 7a, 7b and 8) are to be led to a safe location*(1) & (2) on open deck.

For **safe location*(3)**, refer to footnotes to Paragraph 3.3.2.3.
For **safe location*(1)** and **safe location*(2)**, refer to footnotes to Paragraph 3.1.5.

M74
(cont)

3.3.2 Where the piping is conveying active substances, by-products or neutralizers that are containing dangerous gas or dangerous liquids as defined respectively in 2.3 and 2.4, the following requirements are to be satisfied:

Notes:
1) This requirement is applicable to the injection lines conveying the dangerous gas or dangerous liquids but not applicable to the ballast water lines where the dangerous gas or dangerous liquids are diluted.

2) The IMO reports issued during the basic and final approval procedures of the BWMS that make use of active substances (G9 Guideline) could be used for assessing the hazards that could be expected from the media conveyed by the BWMS piping.

.1 Irrespective of design pressure and temperature, the piping is to be either of Class I (without special safeguard) or Class II (with special safeguard) as required by IACS UR P2 table 1. The selected materials, the testing of the material, the welding, the non-destructive tests of the welding, the type of connections, the hydrostatic tests and the pressure tests after assembly on-board are to be as required in IACS UR P2. Mechanical joints, where allowed, are to be selected in accordance with IACS UR P2 Table 8.

Notes:
1) For piping class II with special safeguards conveying dangerous gas like hydrogen (H_2), oxygen (O_2) or ozone (O_3), the special safeguards are to be either double walled pipes or pipe duct.

2) For piping class II with special safeguards conveying dangerous liquids, other special safeguards could be considered like shielding, screening, etc.

3) Plastic pipes may be accepted after due assessment of the dangerous gas or dangerous liquids conveyed inside. When plastic pipes are accepted, the requirements of UR P4 apply.

.2 The length of pipe and the number of connections are to be minimised.

.3 Inside double walled space or pipe ducts constructed as the special safeguard for the purpose of 3.3.2.1 Note 1) are to be equipped with mechanical exhaust ventilation leading to a safe location*(3) & (4) on open deck.

Footnotes **safe location*(3)** and **safe location*(4)**:

Safe location*(3): hydrogen by-product enriched gas from:
- in-line full flow electrolysis BWMS (category 4), in-line side-stream electrolysis BWMS (category 5) and in-line injection BWMS using chemical which is stored onboard (category 6): the hydrogen de-gas arrangement (when provided);

safe locations on the open deck are:

- not within 5 m of any source of ignition and from deck machinery, which may include anchor windlass and chain locker openings, and equipment which may constitute an ignition hazard;
- not within 3 m of areas traversed by personnel; and
- not within 5 m of air intakes from non-hazardous enclosed spaces.

The areas on open deck, or semi-enclosed spaces on open deck, within 3 m of the outlets are to be categorized hazardous zone 1 plus an additional 1,5 m surrounding the 3 m hazardous zone 1 is to be categorized hazardous zone 2.

Electrical apparatus located in the above hazardous areas zone 1 and zone 2 is to be suitable for at least IIC T1.

Safe location*(4): For in-line ozone injection BWMS (categories 7a and 7b), vent outlet from O_3 destructor device (ODS) can be considered as oxygen-enriched air provided that:

- the ODS are duplicated; and
- the manufacturer justified that the quantity of consumable (activated carbon) used by the ODS is sufficient for the considered life cycle of the BWMS; and
- ozone detection is arranged in the vicinity of the discharge outlet from the vent outlet of the ODS to alarm the crew in case the ODS is not working.

If one of the above 3 conditions is not fulfilled, the safe location from ODS on open deck are:

- outside of hazardous area;
- not within 3 m of any source of ignition;
- not within 6 m of areas traversed by personnel; and
- not within 6 m of air intakes for machinery (engines and boilers) and all ventilation inlets.

M74
(cont)

.4 The routing of the piping system is to be kept away from any source of heating, ignition and any other source that could react hazardously with the dangerous gas or liquid conveyed inside. The pipes are to be suitably supported and protected from mechanical damage.

.5 Pipes carrying acids are to be arranged so as to avoid any projection on crew in case of a leakage.

.6 H_2 by-product enriched air vent pipes (BWMS categories 4, 5 and 6) or O_2 enriched air vent pipes (BWMS categories 3a, 7a, 7b and 8) or O_3 piping (BWMS categories 7a and 7b) shall not be routed through accommodation spaces, services spaces and control stations.

.7 O_2 enriched air vent pipes (BWMS categories 3a, 7a, 7b and 8) shall not be routed through hazardous areas unless it is arranged inside double walled pipes or pipe ducts constructed as the special safeguard for the purpose of 3.3.2.1 Note 1) and provided with suitable gas detection as described in 3.3.1.4 and mechanical exhaust ventilation as described in 3.3.2.3.

.8 The routing of H_2 by-product enriched air vent pipes (BWMS categories 4, 5 and 6) or O_2 enriched air vent pipes (BWMS categories 3a, 7a, 7b and 8) is to be as short and as straight as possible. When necessary, horizontal portions may be arranged with a minimum slope in accordance with the manufacturer's recommendation.

3.3.3 For BWMS using chemical substances or dangerous gas which are stored on-board for either:

- storage or preparation of the active substances (BWMS categories 2 and 6), or
- storage or preparation of the neutralizers (BWMS categories 4, 5, 6, 7a and 7b), or
- recycling the wastes produced by the BWMS (BWMS category 2),

procedures are to be in accordance with the Material Safety Data Sheet and BWM.2/Circ.20 "Guidance to ensure safe handling and storage of chemicals and preparations used to treat ballast water and the development of safety procedures for risks to the ship and crew resulting from the treatment process", and the following measures are to be taken as appropriate:

.1 The materials, inside coating used for the chemical storage tanks, piping and fittings are to be resistant to such chemicals substances.

.2 Chemical substances (even if they are not defined as dangerous liquid in the sense of 2.4) and gas storage tanks are to be designed, constructed, tested, inspected, certified and maintained in accordance with:

- for independent tanks permanently fixed onboard containing dangerous liquids (eg. sulfuric acid H_2SO_4) or dangerous gas (eg. oxygen O_2): the Classification Rules as applicable to pressure vessels
- for independent tanks permanently fixed onboard not containing dangerous liquid (eg. sodium sulphite, sodium biosulphite or sodium thiosulfphate neutralizers) and not containing dangerous gas (eg. nitrogen N_2): the Classification Rules or other industry standard recognized by the Classification Society
- for portable tanks: the IMDG Code or other industry standard recognized by the Classification Society.

M74
(cont)

.3 When the chemical substances are stored inside integral tanks, the ship's shell plating shall not form any boundary of the tank.

.4 Dangerous liquids and dangerous gas storage tank air pipes are to be led to a safe location*(1) & (2) on open deck.

.5 An operation manual containing chemical injection procedures, alarm systems, measures in case of emergency, etc. is to be kept onboard.

.6 Dangerous liquid storage tanks and their associated components like pumps and filters, are to be provided with spill trays or secondary containment system of sufficient volume to contain potential leakages from tank openings, gauge glasses, pumps, filters and piping fittings.

Further to the safety and/or pollution assessment of the concerned chemical substances, consideration should be provided for segregation of the drains from such spill trays (or secondary containment system) or piping systems from engine room bilge system or from cargo pump room bilge system, as applicable. When necessary, arrangement should be provided within the spill trays (or within the secondary containment system) for the detection of dangerous liquid or dangerous gas as defined respectively in 2.3 and 2.4.

Note: The IMO reports issued during the basic and final approval procedures of the BWMS that make use of active substances (G9 Guideline) could be used for this assessment.

3.3.4 A risk assessment is to be conducted in a generic manner during the design review mentioned in 3.1.4 and submitted to the Classification Society for approval for the following BWMS categories:

- BWMS category 4: in all cases;
- BWMS category 5: in all cases;
- BWMS category 6: when one of the MSDS indicates that the chemical substance stored on-board is either flammable, toxic, corrosive or reactive;
- BWMS category 7a and 7b: in all cases.

Note: The IMO reports issued during the basic and final approval procedures of the BWMS that make use of active substances (G9 Guideline) could be used as a reference for this assessment.

.1 The recommended risk assessment techniques for BWMS and other guidances are listed below but not limited to:

- FMEA, FMECA, HAZID, HAZOP, etc.
- ISO 31010 – Risk Assessment Techniques
- IACS Recommendation Rec. 146
- Rules of the Classification Society for risk assessment techniques

.2 The risk assessment should ensure that the package supplied by the BWMS's manufacturer is intrinsically safe and/or provides mitigation measures to the hazards created by the BWMS which have been identified during the design review mentioned in 3.1.4 but that need to be implemented during the installation on-board.

For **safe location*(1)** and **safe location*(2)**, refer to footnotes to Paragraph 3.1.5.

M74 (cont)

Annex I - Installation of one single BWMS on tankers

Table 1: In-line BWMS's technlogies categorization

Note: This Annex does not cover In-tank technologies categories 3c and 8.

		1	2	3a	3b	4	5	6	7a	7b
BWMS's Technology category →		In-line UV or UV + Advanced Oxidation Technology (AOT) or UV + TiO2 or UV + Plasma	In-line Flocculation	In-line membrane separation and de-oxygenation (injection of N2 from a N2 Generator)	In-line de-oxygenation (injection of Inert Gas from Inert Gas Generator)	In-line full flow electrolysis	In-line side stream electrolysis (3)	In-line (stored) chemical injection	In-line side-stream ozone injection without gas/liquid separation tank and without Discharge treatment tank	In-line side-stream ozone injection with gas/liquid separation tank and Discharge water treatment tank
Characteristics ↓										
Des-infection when ballasting	Making use of active substance		X			X	X	X	X	X
	Full flow of ballast water is passing through the BWMS	X	X	X	X	X				X
	Only a small part of ballast water is passing through the BWMS to generate the active substance						X			
After-treatment de-when ballasting	Full flow of ballast water is passing through the BWMS	X								X
	Injection of neutralizer					X	X	X	X	X
	Not required by the Type Approval Certificate issued by the Administration		X	X						
Examples of dangerous gas as defined in UR M74 §2.3			(1)	O2 N2	CO2, CO	H2, Cl2	H2, Cl2	(1)	O2, O3, N2	
Arrangement of one single BWMS	BWMS is located in the outside the cargo area	Not Acceptable	Case 1.2 (2)	Case 1.3a (2)	Case 1.3b	Case 1.4 (2)	Case 1.5	Case 1.6	Case 1.7a	Case 1.7b (2)

Notes:
(1) To be investigated on a case by case basis based on the result of the IMO (GESAMP) MEPC report for Basic and Final approval in accordance with the G9 Guideline.
(2) Only « Means of dis-connection » as described in 3.2.3.1 are to be applied.
(3) In-line side stream electrolysis may also be applied in-tank in circulation mode (no treatment when ballasting or deballasting)

M74
(cont)

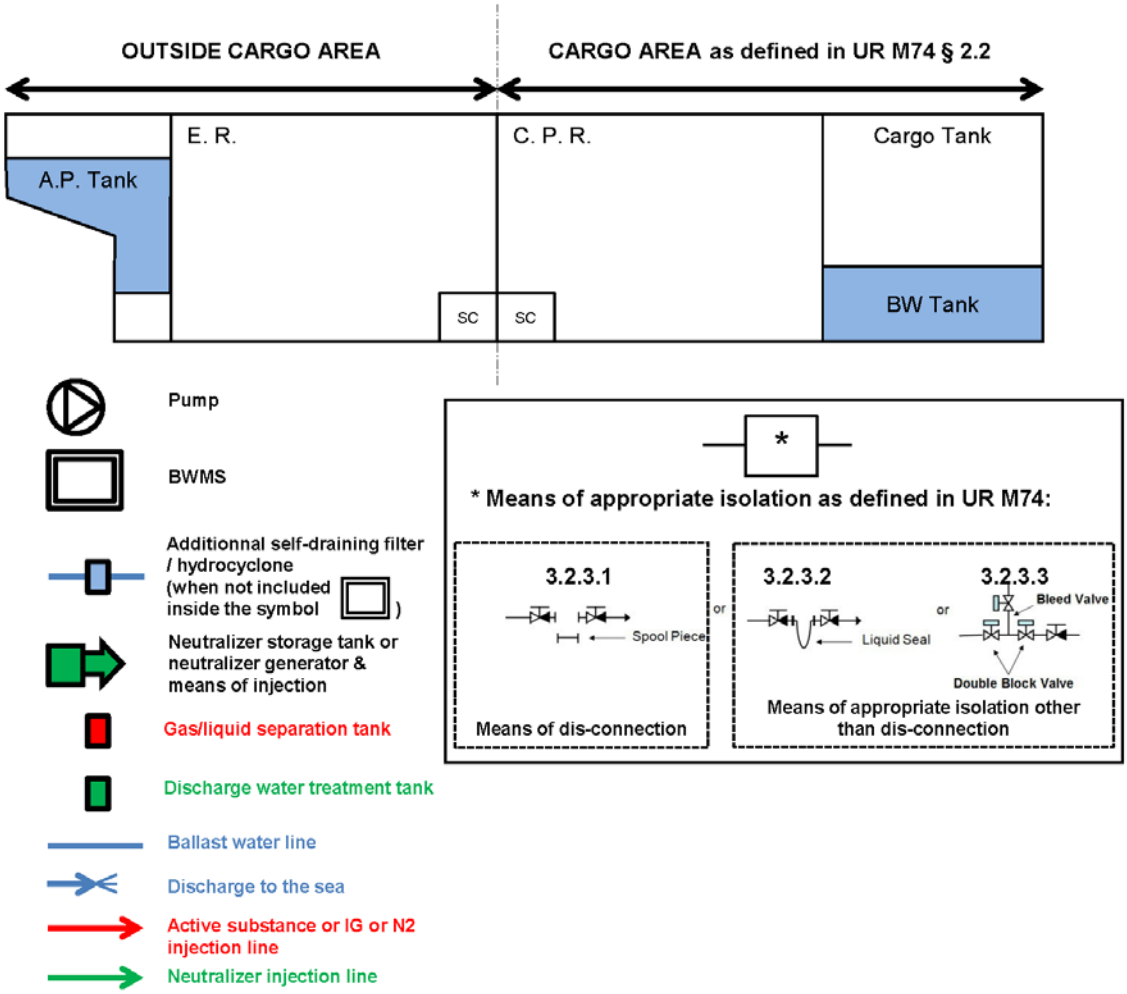
OUTSIDE CARGO AREA
CARGO AREA as defined in UR M74 § 2.2
E. R.
C. P. R.
Cargo Tank
A.P. Tank
SC
SC
BW Tank
Pump
BWMS
Additionnal self-draining filter / hydrocyclone (when not included inside the symbol)
Neutralizer storage tank or neutralizer generator & means of injection
Gas/liquid separation tank
Discharge water treatment tank
Ballast water line
Discharge to the sea
Active substance or IG or N2 injection line
Neutralizer injection line
*
* Means of appropriate isolation as defined in UR M74:
3.2.3.1
Spool Piece
Means of dis-connection
or
3.2.3.2
Liquid Seal
or
3.2.3.3
Bleed Valve
Double Block Valve
Means of appropriate isolation other than dis-connection

M74
(cont)

BWMS installed outside the cargo area
Case 1.2 (Technology category 2, Flocculation); and
Case 1.3a (Technology category 3a De-oxygenation with N2 Generator)

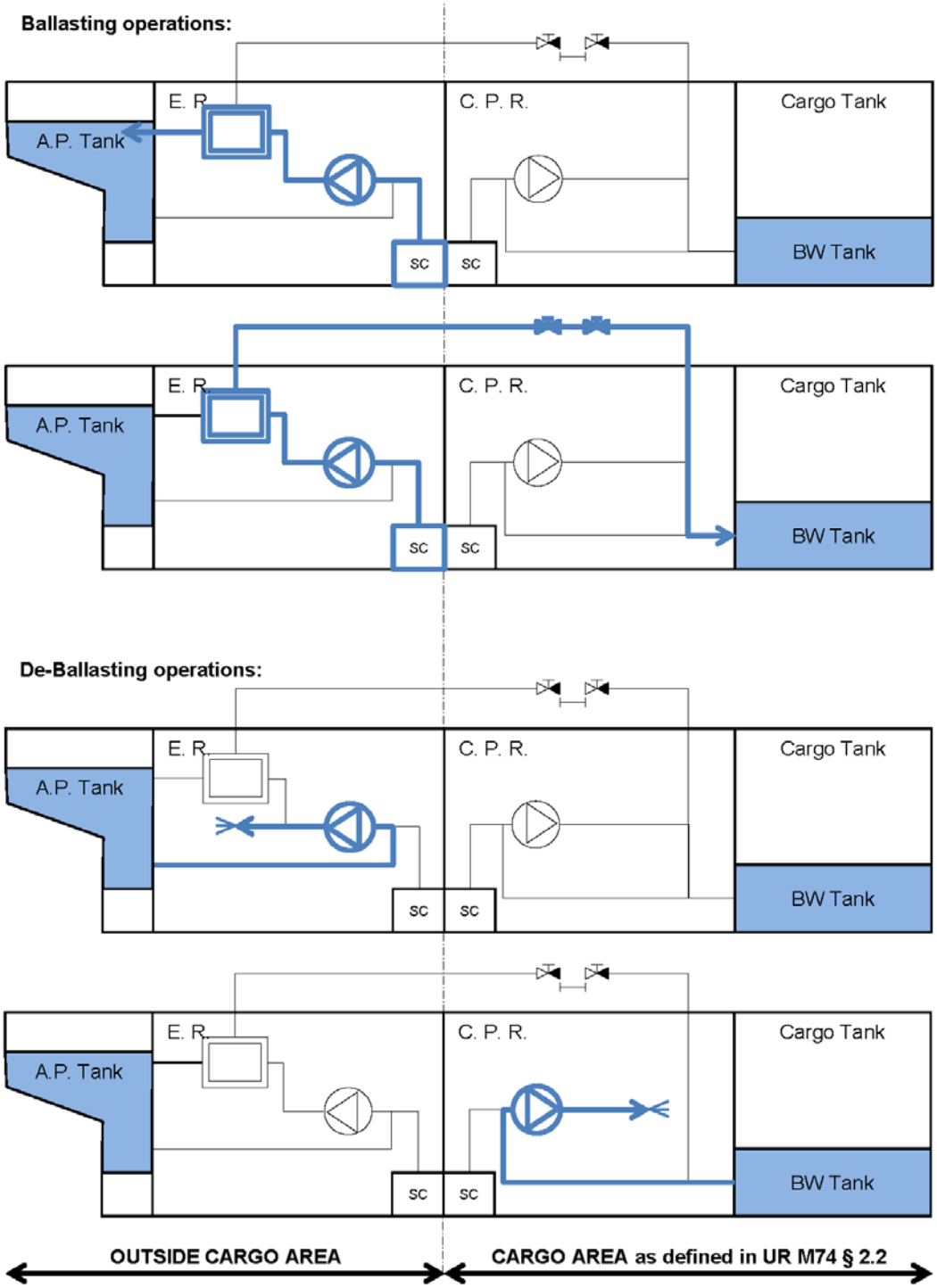

M74
(cont)

BWMS installed outside the cargo area
Case 1.3b (Technology category 3b, De-oxygenation with Inert Gas Generator):

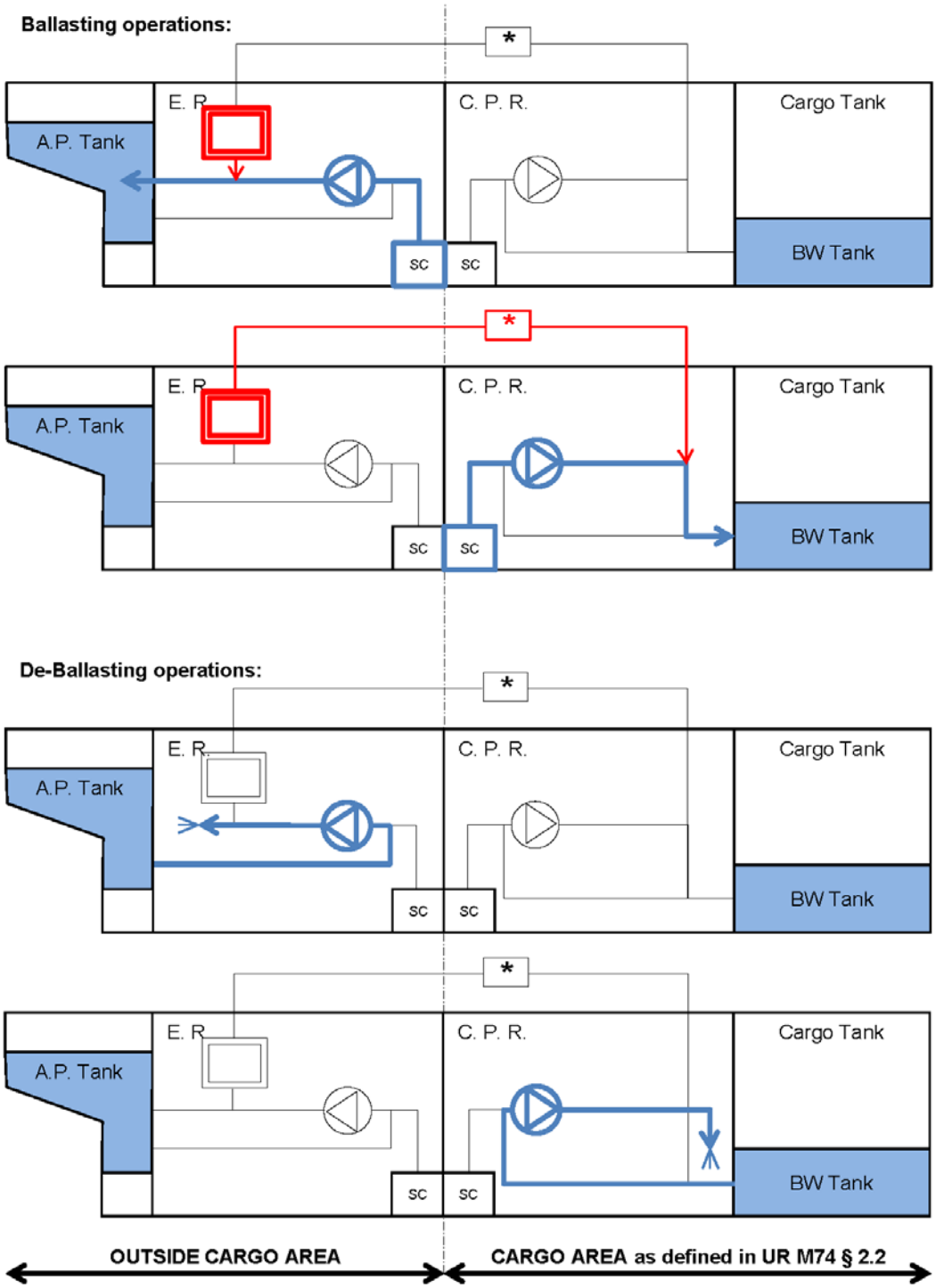

M74
(cont)

BWMS installed outside the cargo area
Case 1.4 (Technology category 4, Full-flow electrolysis):

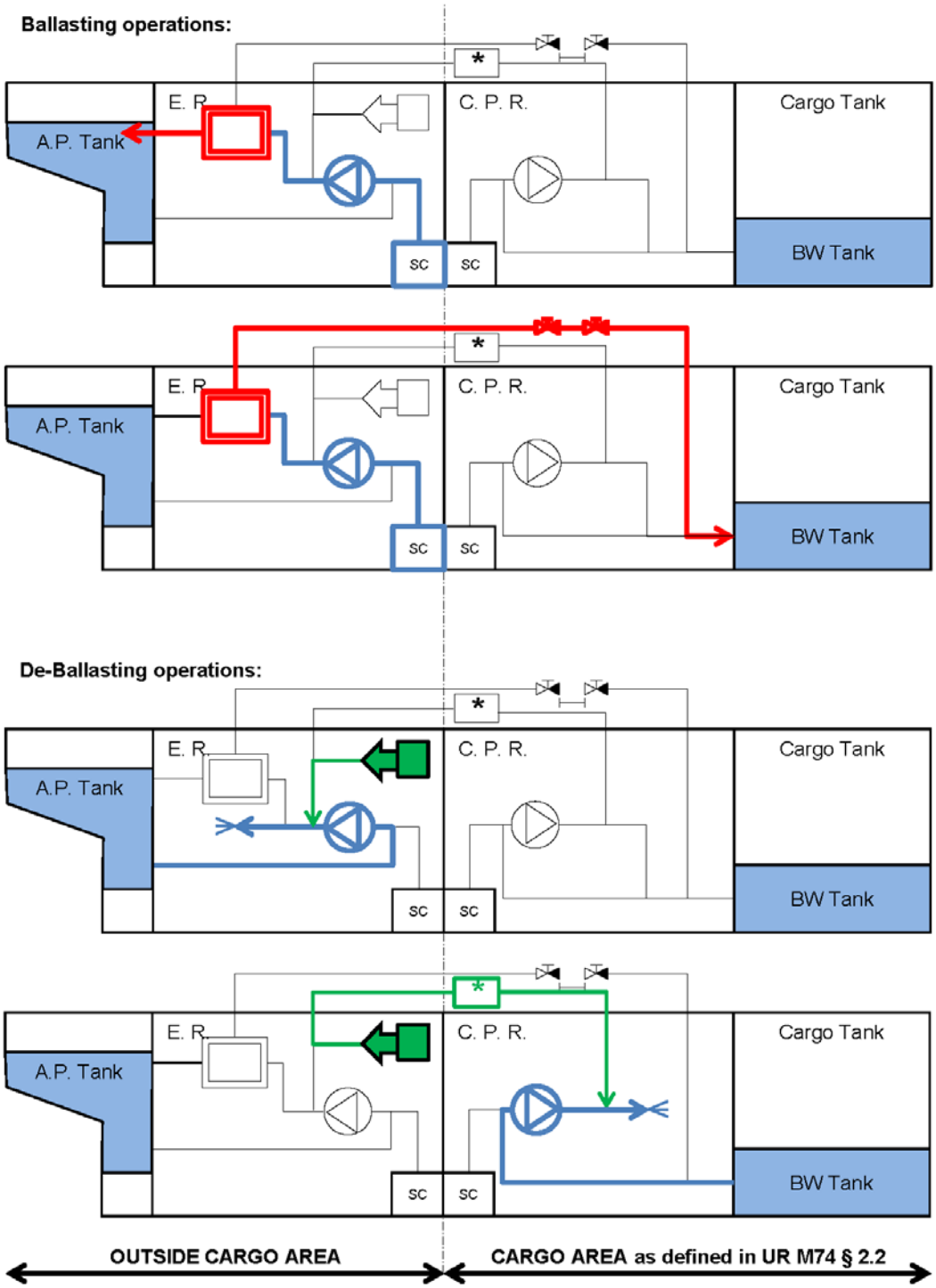

M74
(cont)

BWMS installed outside the cargo area
Case 1.5 (Technology category 5, Side-stream electrolysis):

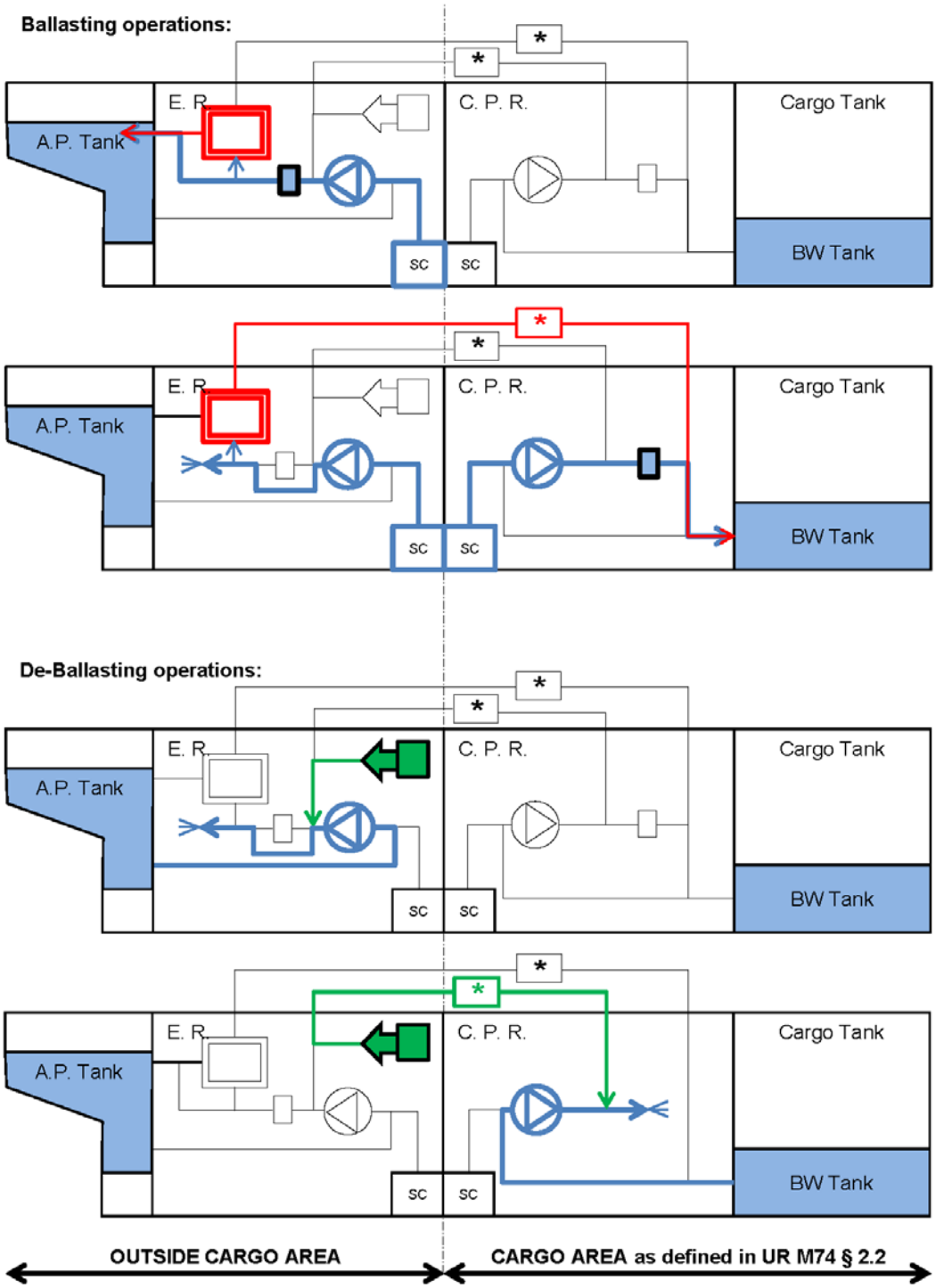

M74
(cont)

BWMS installed outside the cargo area
Case 1.6 (Technology category 6, Stored chemical injection)

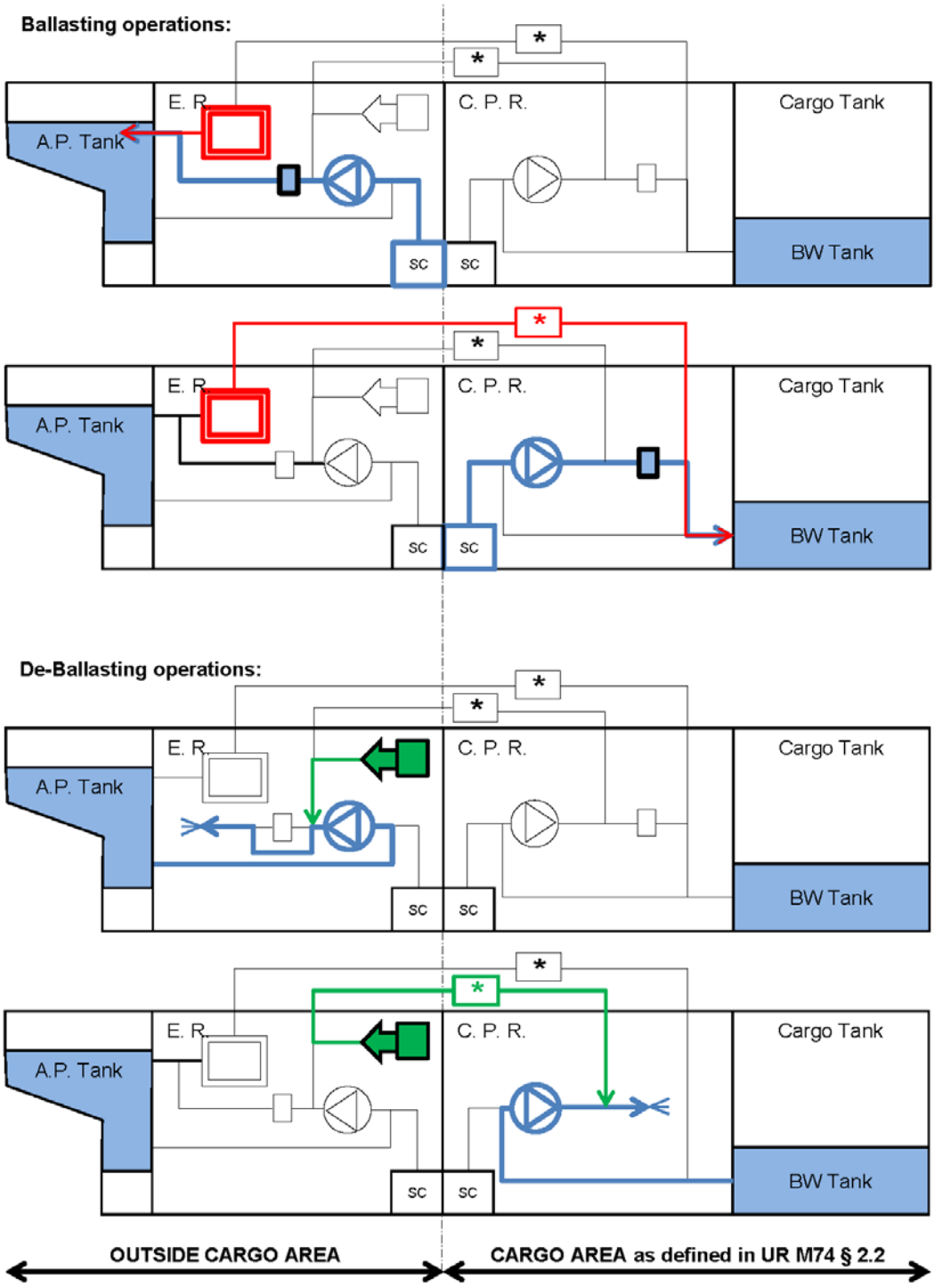

M74
(cont)

BWMS installed outside the cargo area

Case 1.7a (Technology category 7a, Side-stream ozone injection without gas/liquid separation tank and without discharge water treatment tank):

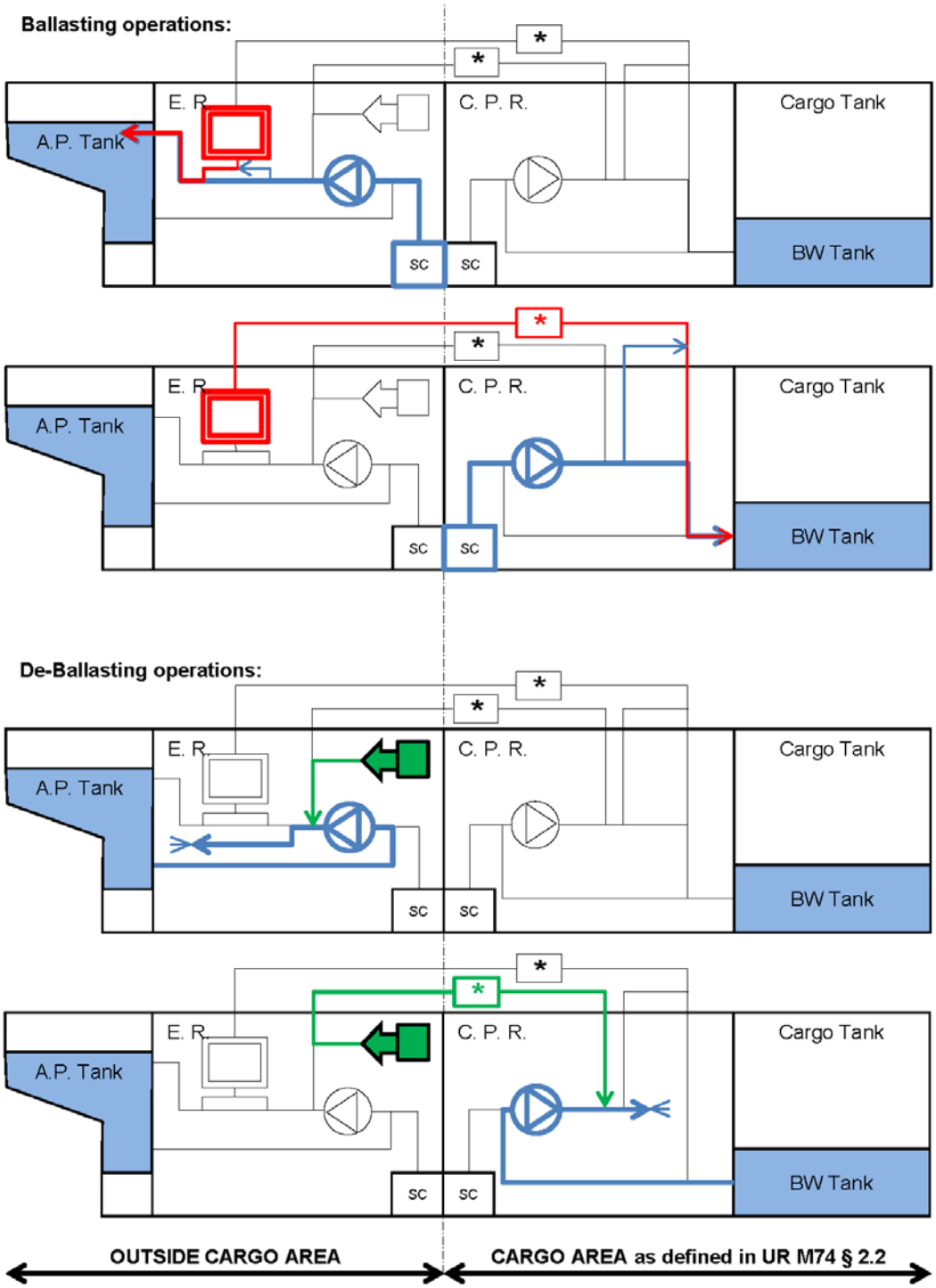

M74
(cont)

BWMS installed outside the cargo area

Case 1.7b (Technology category 7b, Side-stream ozone injection with gas/liquid separation tank and discharge water treatment tank):

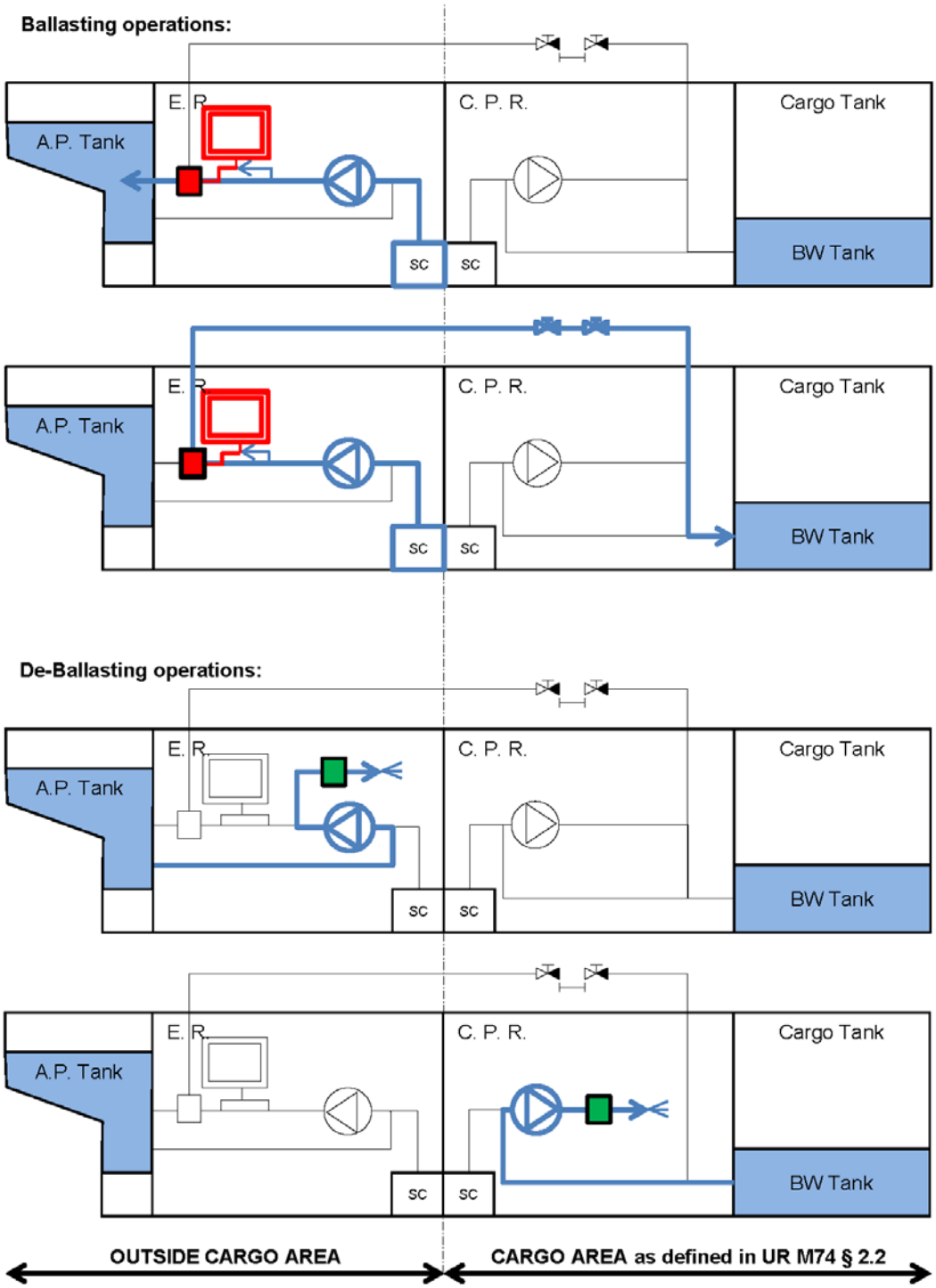

M74
(cont)

Annex II (INFORMATIVE)
BWMS Technologies categorization

BWMS Technology Group no. 1
In-Line UV
including UV + AOT
Including UV+TiO2)

Ballasting operation:

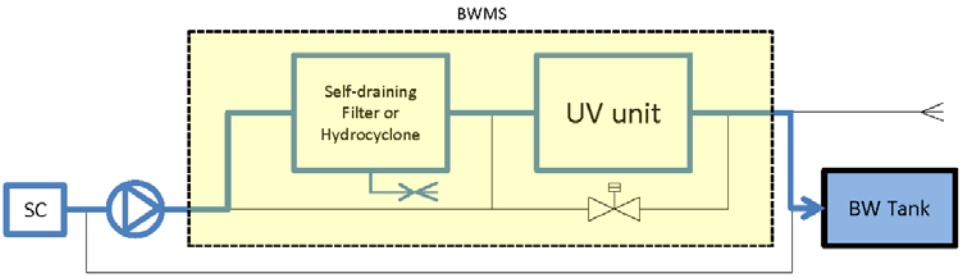

De-ballasting operation:

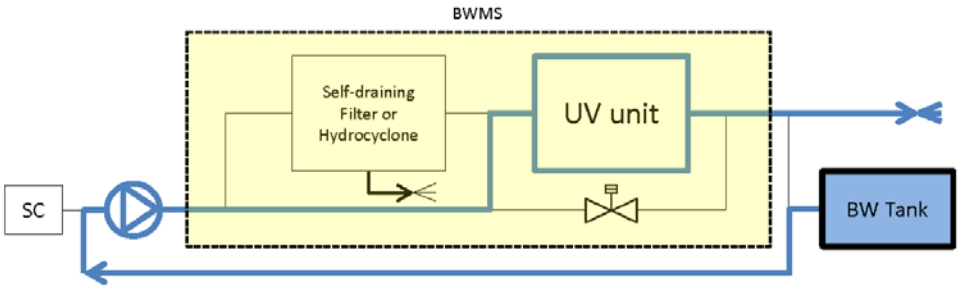

M74
(cont)

BWMS Technology Group no. 2
In-Line Flocculation

Ballasting operation:

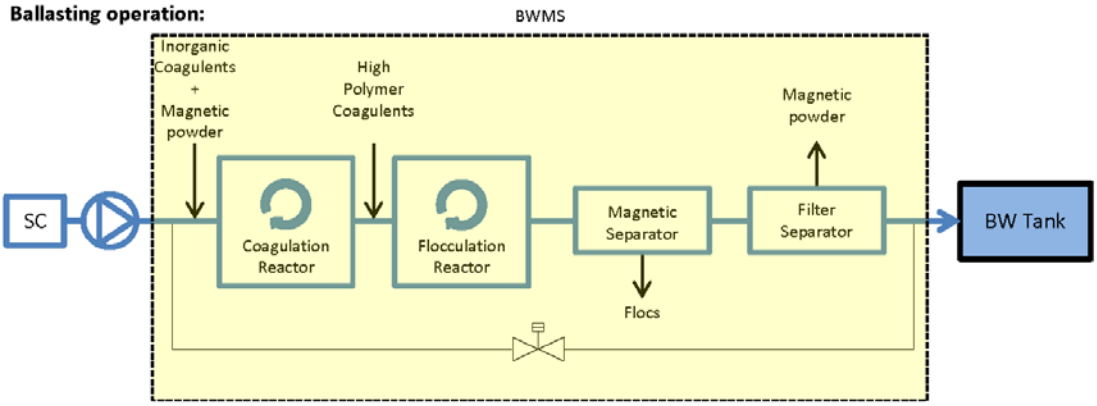

De-ballasting operation: no requirement for after-treatment

M74
(cont)

BWMS Technology Group no. 3a
In-Line membrane separation and de-oxygenation
(injection of N2 from N2 Generator)

Ballasting operation:

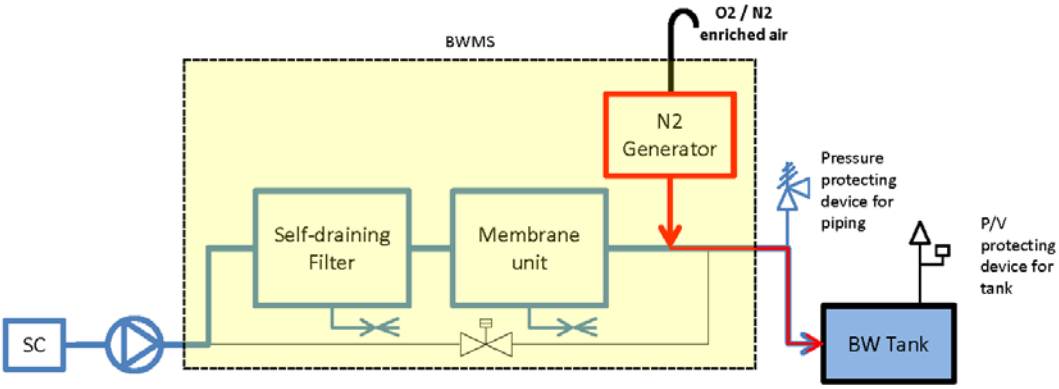

De-ballasting operation: no requirement for after-treatment

M74
(cont)

BWMS Technology Group no. 3b
In-Line de-oxygenation
(injection of inert gas from either an oil fired inert gas generator or inert gas from treatment of the flue gas from main or auxiliary boilers)

Ballasting operation:

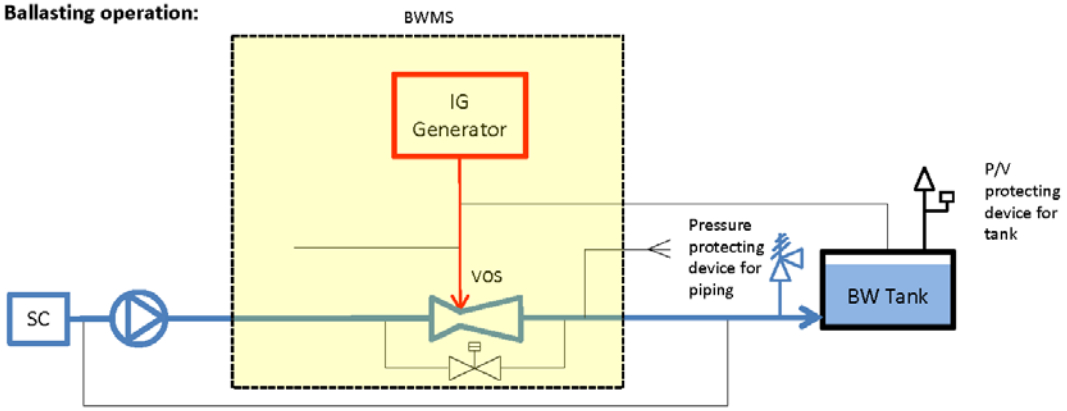

De-ballasting operation:

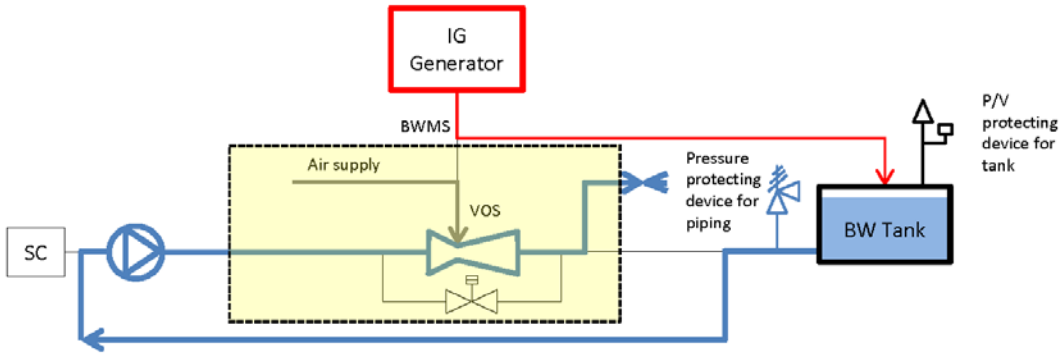

M74
(cont)

BWMS Technology Group no. 3c
In-tank de-oxygenation with IGG

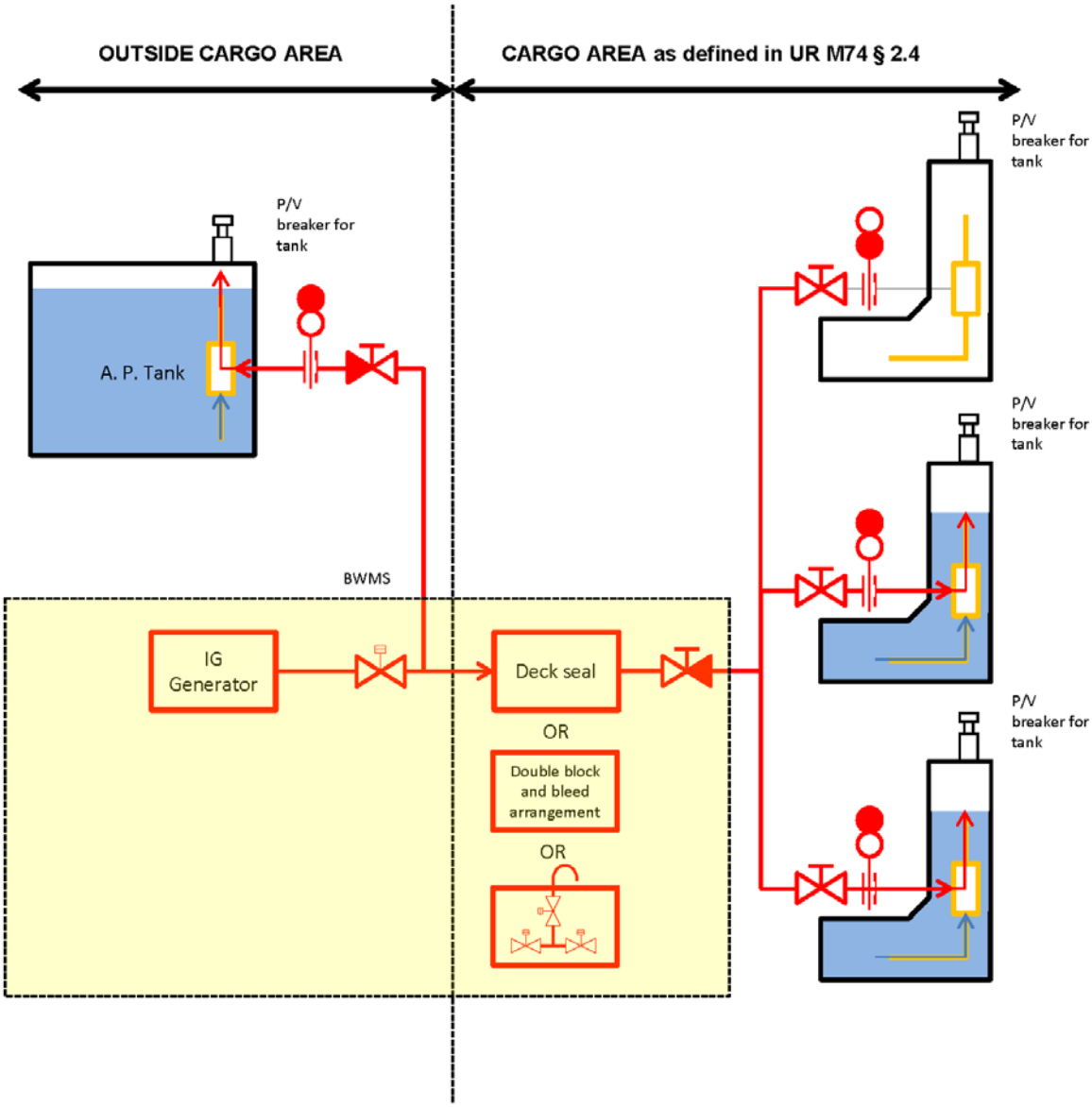

M74
(cont)

BWMS Technology Group no. 4
In-Line Full flow electrolysis

Ballasting operation:

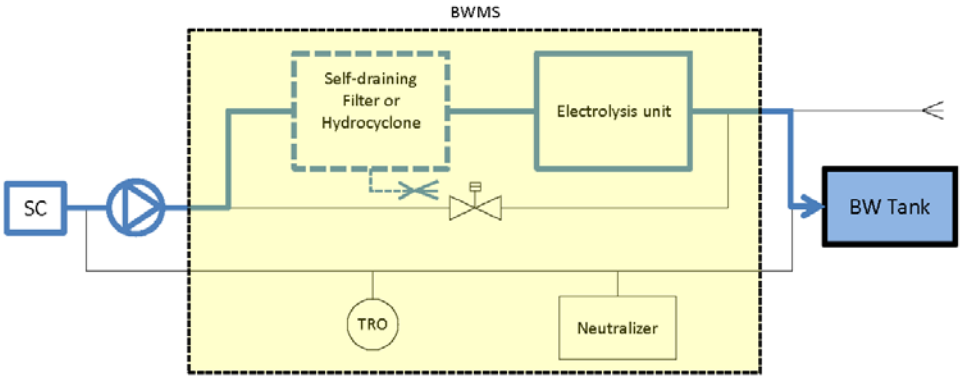

De-ballasting operation:

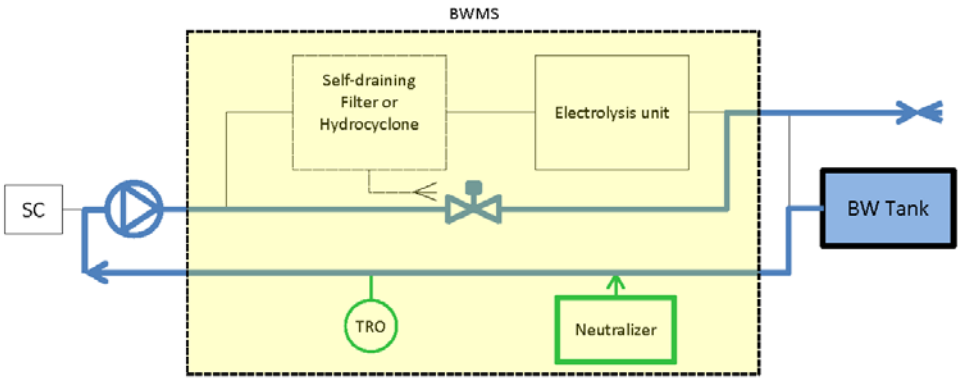

M74
(cont)

BWMS Technology Group no. 5
In-Line Side-Stream electrolysis (electro-chlorinization)

Note: In-line side stream electrolysis may also be applied in-tank in circulation mode (no treatment when ballasting or de-ballasting)

Ballasting operation:

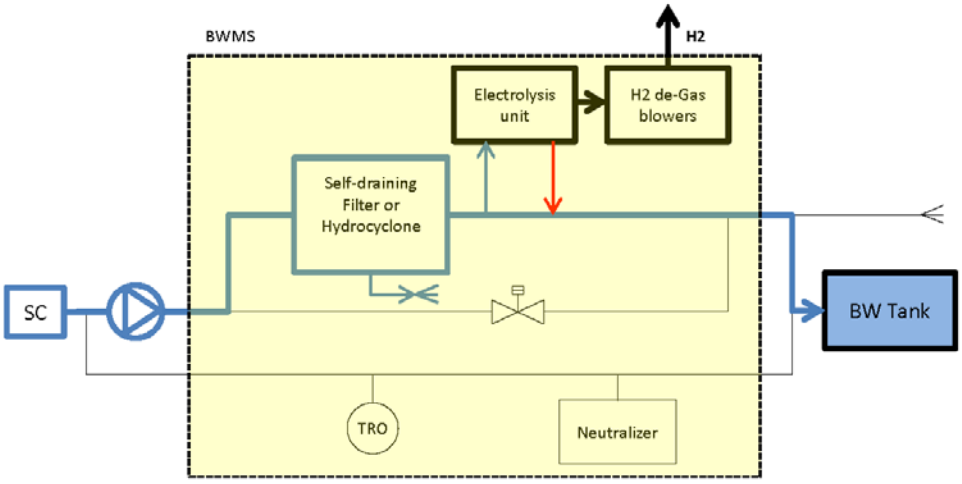

De-ballasting operation:

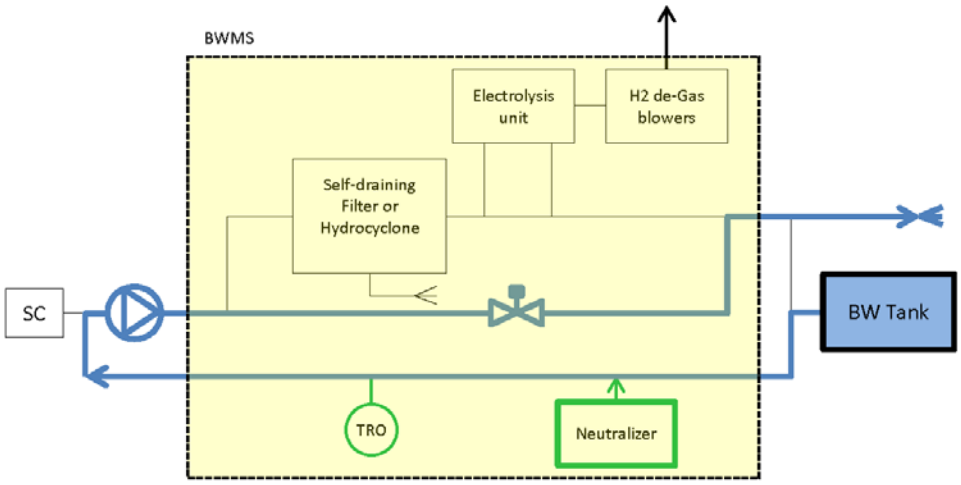

M74
(cont)

BWMS Technology Group no. 6
In-Line Chemical injection

Ballasting operation:

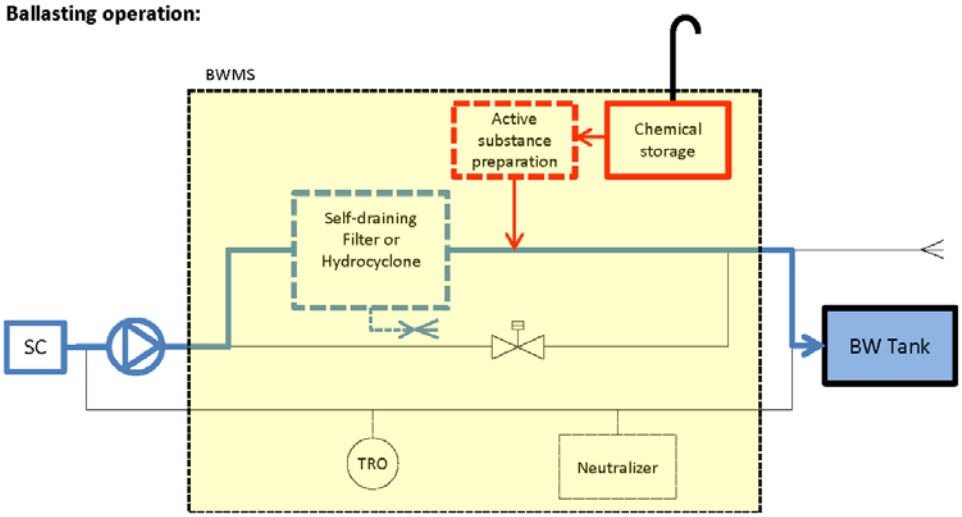

De-ballasting operation (when netralization is required by the Type Approval certificate):

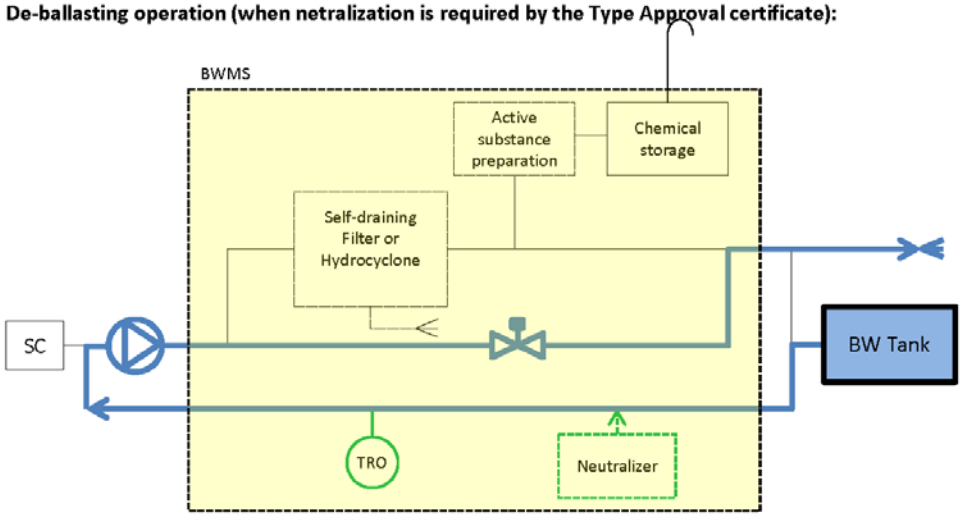

M74
(cont)

BWMS Technology Group no. 7a
In-Line Side-stream Ozone injection without gas/liquid separation tank and without discharge water treatment tank

Ballasting operation:

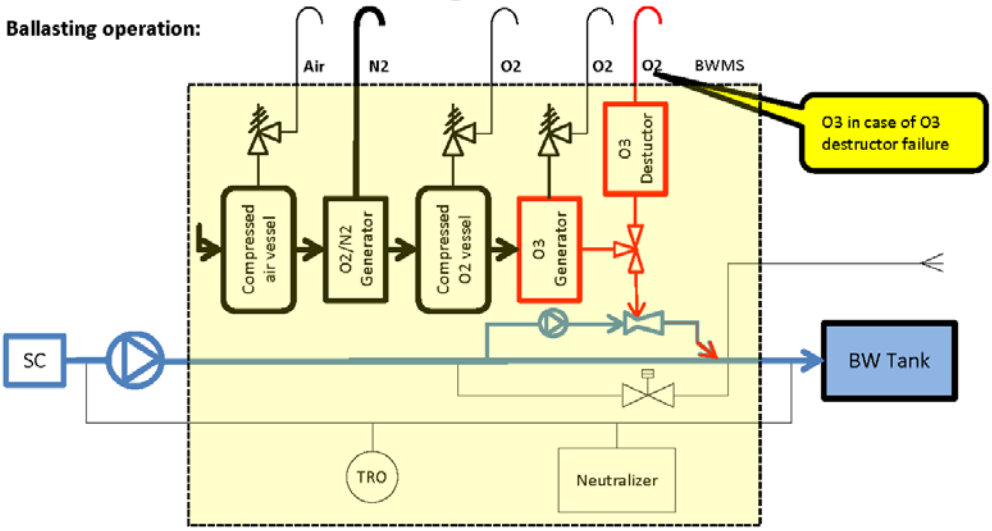

De-ballasting operation:

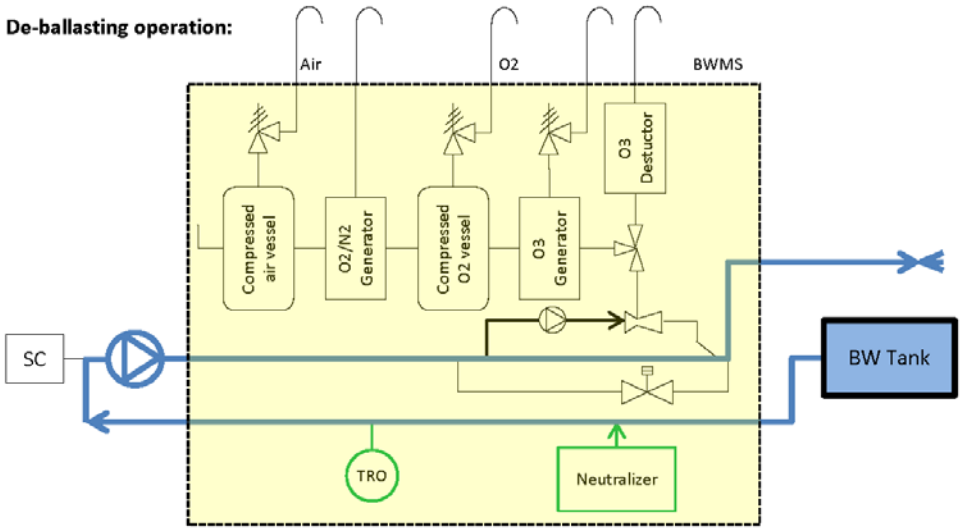

M74
(cont)

BWMS Technology Group no. 7b
In-Line Side-stream Ozone injection with gas/liquid separation tank and with discharge water treatment tank

Ballasting operation:

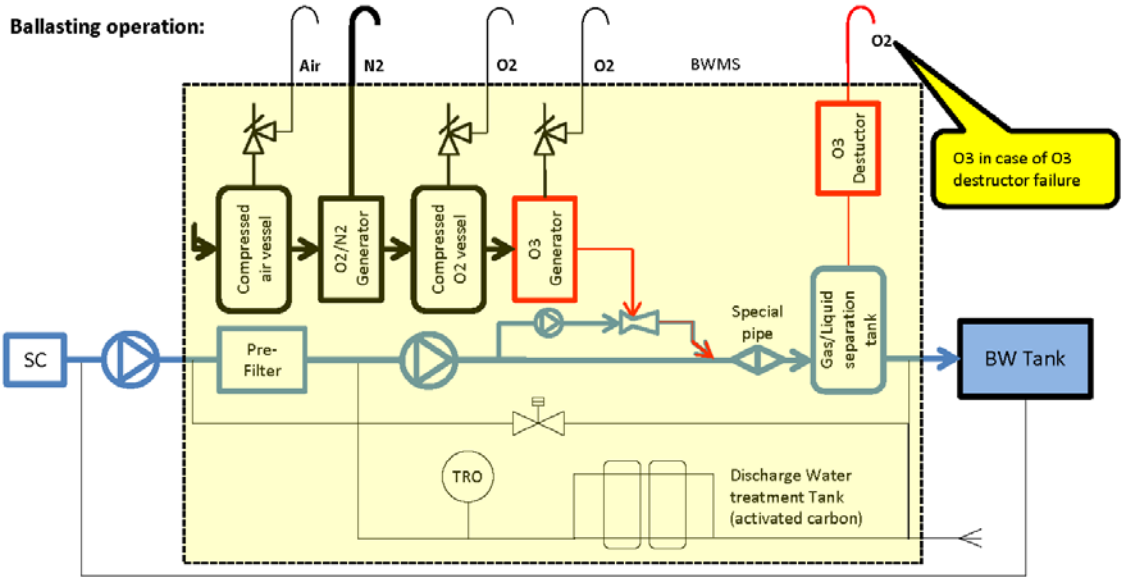

De-ballasting operation:

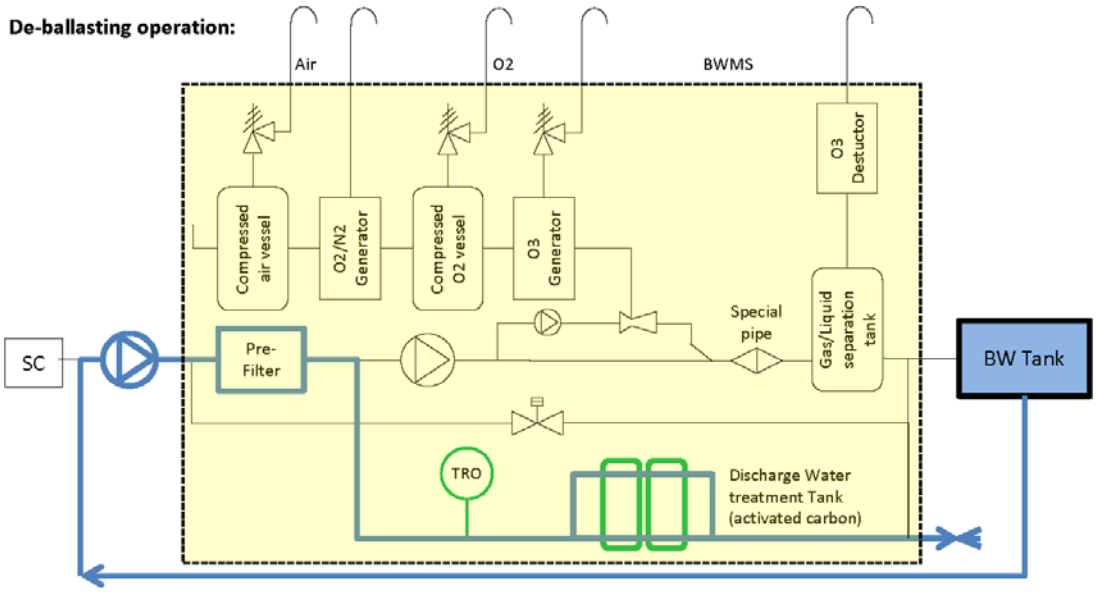

M74
(cont)

BWMS Technology Group no. 8
In-tank Pasteurization + de-oxygenation with N2 Generator

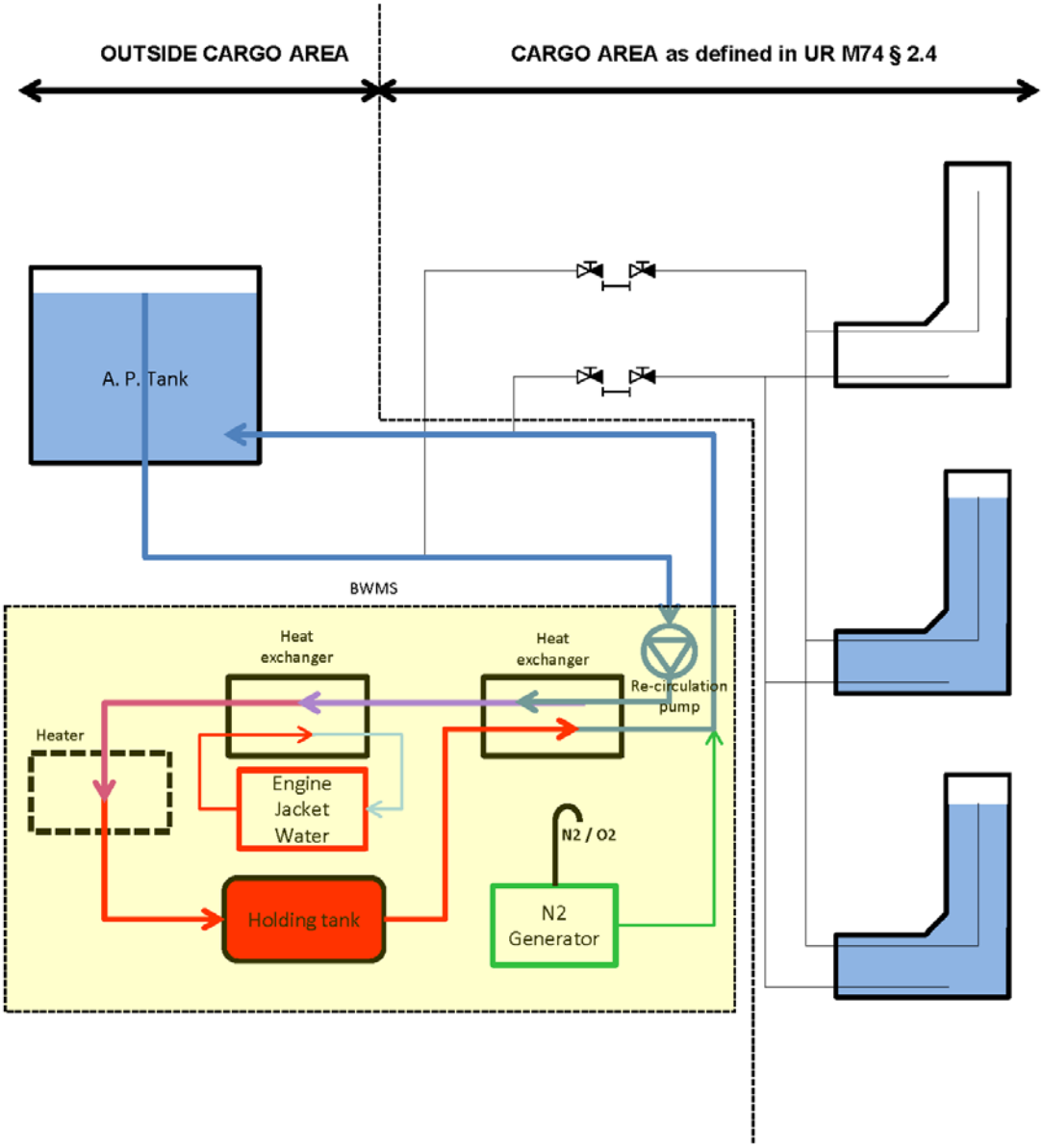

End of Document