S26
(Nov 2002)
(Rev.1
Nov 2003)
(Rev.2
July 2004)
(Rev.3
Aug 2006)
(Rev.4
May 2010)
(Rev.5
May 2023)

Strength and Securing of Small Hatches on the Exposed Fore Deck

1. General

1.1 The strength of, and securing devices for, small hatches fitted on the exposed fore deck are to comply with the requirements of this UR.

1.2 Small hatches in the context of this UR are hatches designed for access to spaces below the deck and are capable of being closed weather-tight or watertight, as applicable. Their opening is normally 2.5 square metres or less.

1.3 Hatches designed for emergency escape need not comply with the requirements 5.1 (i) and (ii), 6.3 and 7 of this UR.

1.4 Securing devices of hatches designed for emergency escape are to be of a quick-acting type (e.g., one action wheel handles are provided as central locking devices for latching/unlatching of hatch cover) operable from both sides of the hatch cover.

2. Application

2.1 For ships that are contracted for construction on or after 1 January 2004 on the exposed deck over the forward 0.25L, applicable to:

All ship types of sea going service of length 80 m or more, where the height of the exposed deck in way of the hatch is less than 0.1L or 22 m above the summer load waterline, whichever is the lesser.

2.2 For ships that are contracted for construction prior to 1 January 2004 only for hatches on the exposed deck giving access to spaces forward of the collision bulkhead, and to spaces which extend over this line aft-wards, applicable to:

Bulk carriers, ore carriers, and combination carriers (as defined in UR Z11) and general dry cargo ships (excluding container vessels, vehicle carriers, Ro-Ro ships and woodchip carriers), of length 100 m or more.

2.3 The ship length L is as defined in UR S2.

2.4 This UR does not apply to CSR Bulk Carriers and Oil Tankers.

2.5 This UR does not apply to small hatches on container ship giving access to a cargo hold which comply with UI LL64 except the requirement of clause 4 & 5. Such hatch covers are considered non-weathertight regardless of whether it is actually weathertight or not. However, for scantlings of small hatches, the strength requirements in clause 4 of this UR could be applied instead of clause 6 of UI LL64.

Note:
1. The “contracted for construction” date means the date on which the contract to build the vessel is signed between the prospective owner and the shipbuilder. For further details regarding the date of “contract for construction”, refer to IACS PR No. 29.

2. Changes introduced in Rev.5 are to be uniformly implemented by IACS Members for ships contracted for construction on or after 1 July 2024.

S26 (cont)

3. Implementation * (see footnote)

3.1 Ships that are described in paragraph 2.1 that are contracted for construction on or after 1 January 2004 are to comply by the time of delivery.

3.2 Ships described in paragraph 2.2 that are contracted for construction prior to 1 January 2004 are to comply:

i) for ships which will be 15 years of age or more on 1 January 2004 by the due date of the first intermediate or special survey after that date;

ii) for ships which will be 10 years of age or more on 1 January 2004 by the due date of the first special survey after that date;

iii) for ships which will be less than 10 years of age on 1 January 2004 by the date on which the ship reaches 10 years of age.

4. Strength

4.1 For small rectangular steel hatch covers, the plate thickness, stiffener arrangement and scantlings are to be in accordance with Table 1, and Figure 1. Stiffeners, where fitted, are to be aligned with the metal-to-metal contact points, required in 6.1, see Figure 1. Primary stiffeners are to be continuous. All stiffeners are to be welded to the inner edge stiffener, see Figure 2.

4.2 The upper edge of the hatchway coamings is to be suitably reinforced by a horizontal section, normally not more than 170 to 190 mm from the upper edge of the coamings.

4.3 For small hatch covers of circular or similar shape, the cover plate thickness and reinforcement is to be according to the requirements of each Society.

4.4 For small hatch covers constructed of materials other than steel, the required scantlings are to provide equivalent strength.

---

* The requirements in 1.4, introduced in Rev. 3 of this UR, are to be uniformly applied by IACS Members and Associates:

(a) to new vessels, contracted for construction on or after 1 July 2007, by the time of delivery;

(b) to vessels contracted for construction prior to 1 July 2007, by the compliance date specified in Section 3 of this UR, or by the due date of the first special survey after 1 July 2007, whichever is later. Completion prior to 1 July 2007 of a special survey with a due date after 1 July 2007 cannot be used to postpone compliance.

S26 (cont)

5. Primary Securing Devices

5.1 Small hatches located on exposed fore deck subject to the application of this UR are to be fitted with primary securing devices such that their hatch covers can be secured in place and weather-tight by means of a mechanism employing any one of the following methods:

i) Butterfly nuts tightening onto forks (clamps),

ii) Quick acting cleats, or

iii) Central locking device.

5.2 Dogs (twist tightening handles) with wedges are not acceptable.

6. Requirements for Primary Securing

6.1 The hatch cover is to be fitted with a gasket of elastic material. This is to be designed to allow a metal to metal contact at a designed compression and to prevent over compression of the gasket by green sea forces that may cause the securing devices to be loosened or dislodged. The metal-to-metal contacts are to be arranged close to each securing device in accordance with Figure 1, and of sufficient capacity to withstand the bearing force.

6.2 The primary securing method is to be designed and manufactured such that the designed compression pressure is achieved by one person without the need of any tools.

6.3 For a primary securing method using butterfly nuts, the forks (clamps) are to be of robust design. They are to be designed to minimize the risk of butterfly nuts being dislodged while in use; by means of curving the forks upward, a raised surface on the free end, or a similar method. The plate thickness of unstiffened steel forks is not to be less than 16 mm. An example arrangement is shown in Figure 2.

6.4 For small hatch covers located on the exposed deck forward of the fore-most cargo hatch, the hinges are to be fitted such that the predominant direction of green sea will cause the cover to close, which means that the hinges are normally to be located on the fore edge.

6.5 On small hatches located between the main hatches, for example between Nos. 1 and 2, the hinges are to be placed on the fore edge or outboard edge, whichever is practicable for protection from green water in beam sea and bow quartering conditions.

7. Secondary Securing Device

Small hatches on the fore deck are to be fitted with an independent secondary securing device e.g. by means of a sliding bolt, a hasp or a backing bar of slack fit, which is capable of keeping the hatch cover in place, even in the event that the primary securing device became loosened or dislodged. It is to be fitted on the side opposite to the hatch cover hinges.

S26 (cont)

Table 1: Scantlings for Small Steel Covers on the Fore Deck

Nominal size (mm x mm)	Cover plate thickness (mm)	Primary stiffeners	Secondary stiffeners
		Flat Bar (mm x mm); number	
630 x 630	8	-	-
630 x 830	8	100 x 8 ; 1	-
830 x 630	8	100 x 8 ; 1	-
830 x 830	8	100 x 10 ; 1	-
1030 x 1030	8	120 x 12 ; 1	80 x 8 ; 2
1330 x 1330	8	150 x 12 ; 2	100 x 10 ; 2

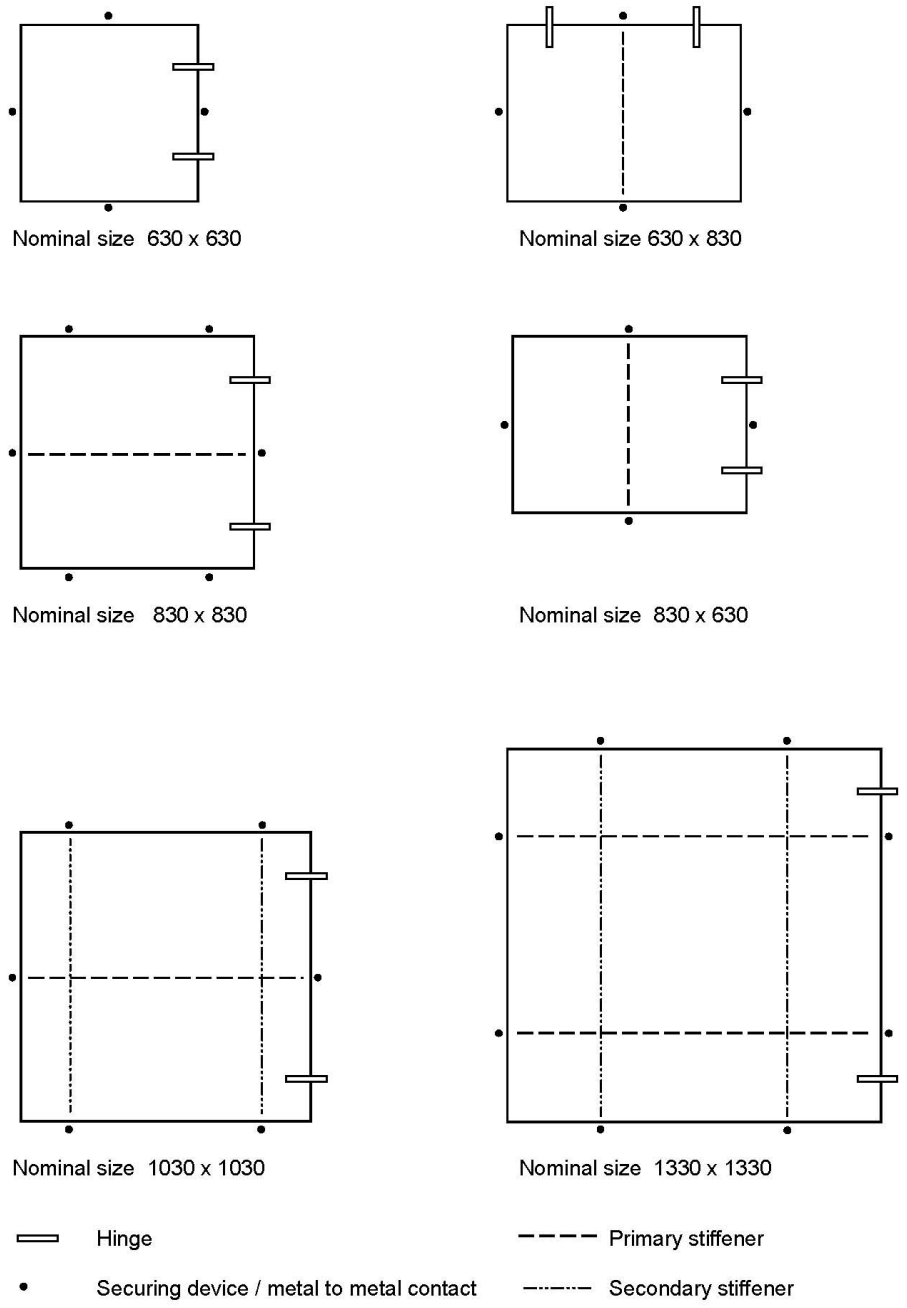

Figure 1. Arrangement of Stiffeners

S26
(cont)

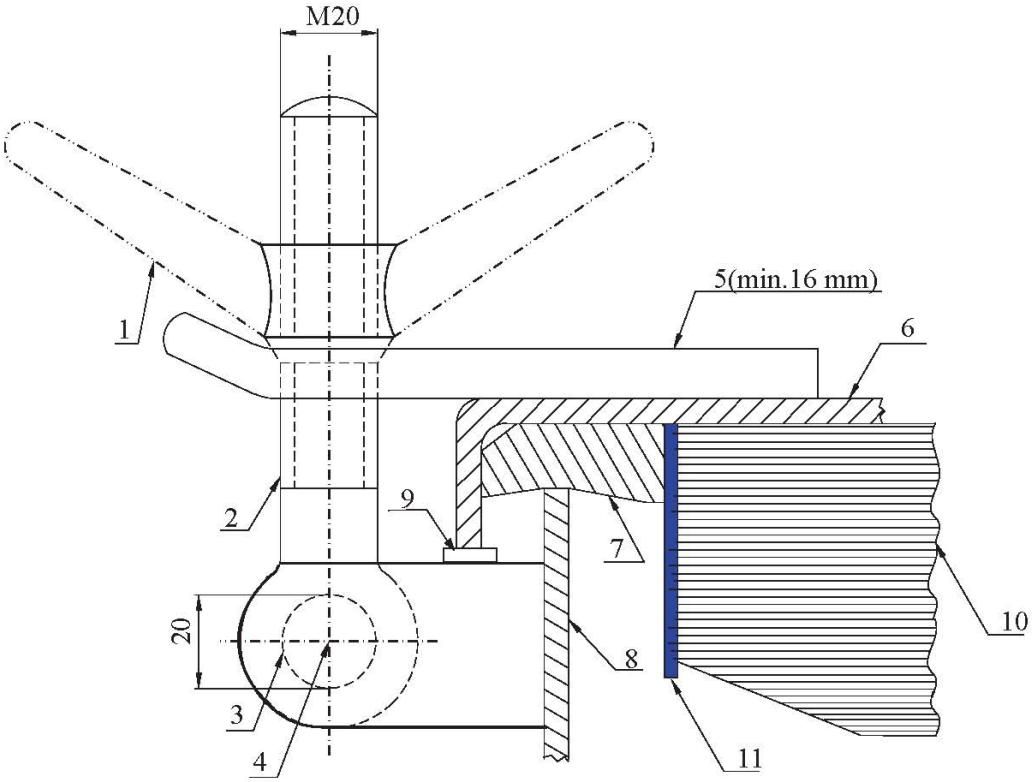

(Note: Dimensions in millimeters)

1: butterfly nut
2: bolt
3: pin
4: center of pin
5: fork (clamp) plate
6: hatch cover
7: gasket
8: hatch coaming
9: bearing pad welded on the bracket of a toggle bolt for metal to metal contact
10: stiffener
11: inner edge stiffener

Figure 2. Example of a Primary Securing Device

End of Document