Z10.1
(cont'd)

2.2 Minimum Requirements
However, these guidelines may not be used to reduce the requirements pertaining to thickness measurement, close-up survey and tank testing contained in Tables I, II and III, respectively, of Z10.1; which are, in all cases, to be complied with as a minimum.

2.3 Timing
As with other aspects of survey planning, the technical assessments described in these guidelines are to be worked out by the Owner or operator in cooperation with the Classification Society well in advance of the commencement of the Special Survey, i.e., prior to commencing the survey and normally at least 12 to 15 months before the survey's completion due date.

2.4 Aspects to be Considered
Technical assessments, which may include quantitative or qualitative evaluation of relative risks of possible deterioration, of the following aspects of a particular ship may be used as a basis for the nomination of tanks and areas for survey:

* Design features such as stress levels on various structural elements, design details and extent of use of high tensile steel.
* Former history with respect to corrosion, cracking, buckling, indents and repairs for the particular ship as well as similar vessels, where available.
* Information with respect to types of cargo carried, use of different tanks for cargo/ballast, protection of tanks and condition of coating, if any.

Technical assessments of the relative risks of susceptibility to damage or deterioration of various structural elements and areas are to be judged and decided on the basis of recognised principles and practices, such as may be found in publications of the Tanker Structure Cooperative Forum (TSCF), (Refs. 1 and 2).

3. TECHNICAL ASSESSMENT

3.1 General
There are three basic types of possible failure which may be the subject of technical assessment in connection with planning of surveys; corrosion, cracks and buckling. Contact damages are not normally covered by the survey plan since indents are usually noted in memoranda and assumed to be dealt with as a normal routine by Surveyors.
Technical assessments performed in conjunction with the survey planning process are, in principle to be as shown schematically in Figure 1 depicts, schematically, how technical assessments can be carried out in conjunction with the survey planning process.

The approach is basically an evaluation of the risk based on the knowledge and experience related to design and corrosion.

The design is to be considered with respect to structural details which may be susceptible to buckling or cracking as a result of vibration, high stress levels or fatigue.
Corrosion is related to the ageing process, and is closely connected with the quality of corrosion protection at newbuilding, and subsequent maintenance during the service life. Corrosion may also lead to cracking and/or buckling.

3.2 Methods

3.2.1 Design Details
Damage experience related to the ship in question and similar ships, where available, is the main source of information to be used in the process of planning. In addition, a selection of structural details from the design drawings is to be included.

Z10.1
(cont'd)

Typical damage experience to be considered will consist of:

- Number, extent, location and frequency of cracks;
- Location of buckles.

This information may be found in the survey reports and/or the Owner's files, including the results of the Owner's own inspections. The defects should be analyzed, noted and marked on sketches.
In addition, general experience is to be utilized. For example, reference should be made to TSCF's "Guidance Manual for the Inspection and Condition Assessment of Tanker Structures," (Ref. 1), which contains a catalogue of typical damages and proposed repair methods for various tanker structural details.

Such figures are to be used together with a review of the main drawings, in order to compare with the actual structure and search for similar details which may be susceptible to damage. An example is shown in Figure 2.

The review of the main structural drawings, in addition to using the above mentioned figures, should include checking for typical design details where cracking has been experienced. The factors contributing to damage are to be carefully considered.

The use of high tensile steel (HTS) is an important factor. Details showing good service experience where ordinary, mild steel has been used may be more susceptible to damage when HTS, and its higher associated stresses, are utilized. There is extensive and, in general, good experience, with the use of HTS for longitudinal material in deck and bottom structures. Experience in other locations, where the dynamic stresses may be higher, is less favourable, e.g. side structures.

In this respect, stress calculations of typical and important components and details, in accordance with the latest Rules or other relevant methods, may prove useful and are to be considered.
The selected areas of the structure identified during this process are to be recorded and marked on the structural drawings to be included in the Survey Programme.

3.2.2 Corrosion
In order to evaluate relative corrosion risks, the following information is generally to be considered:

- Usage of Tanks and Spaces
- Condition of Coatings
- Cleaning Procedures
- Previous Corrosion Damage
- Ballast use and time for Cargo Tanks
- Corrosion Risk Scheme (See Ref. 2, Table 3.1)
- Location of Heated Tanks

Ref. 2 gives definitive examples which can be used for judging and describing coating condition, using typical pictures of conditions.

The evaluation of corrosion risks is to be based on information in Ref. 2, together with relevant information on the anticipated condition of the ship as derived from the information collected in order to prepare the Survey Programme and the age of the ship.

The various tanks and spaces are to be listed with the corrosion risks nominated accordingly.

Z10.1
(cont'd)

3.2.3 Locations for Close-up Survey and Thickness Measurement

On the basis of the table of corrosion risks and the evaluation of design experience, the locations for initial close-up survey and thickness measurement (sections) may be nominated.

The sections subject to thickness measurement are to normally be nominated in tanks and spaces where corrosion risk is judged to be the highest.

The nomination of tanks and spaces for close-up survey should, initially, be based on highest corrosion risk, and should always include ballast tanks. The principle for the selection is to be that the extent is increased by age or where information is insufficient or unreliable.

Z10.1
(cont'd)

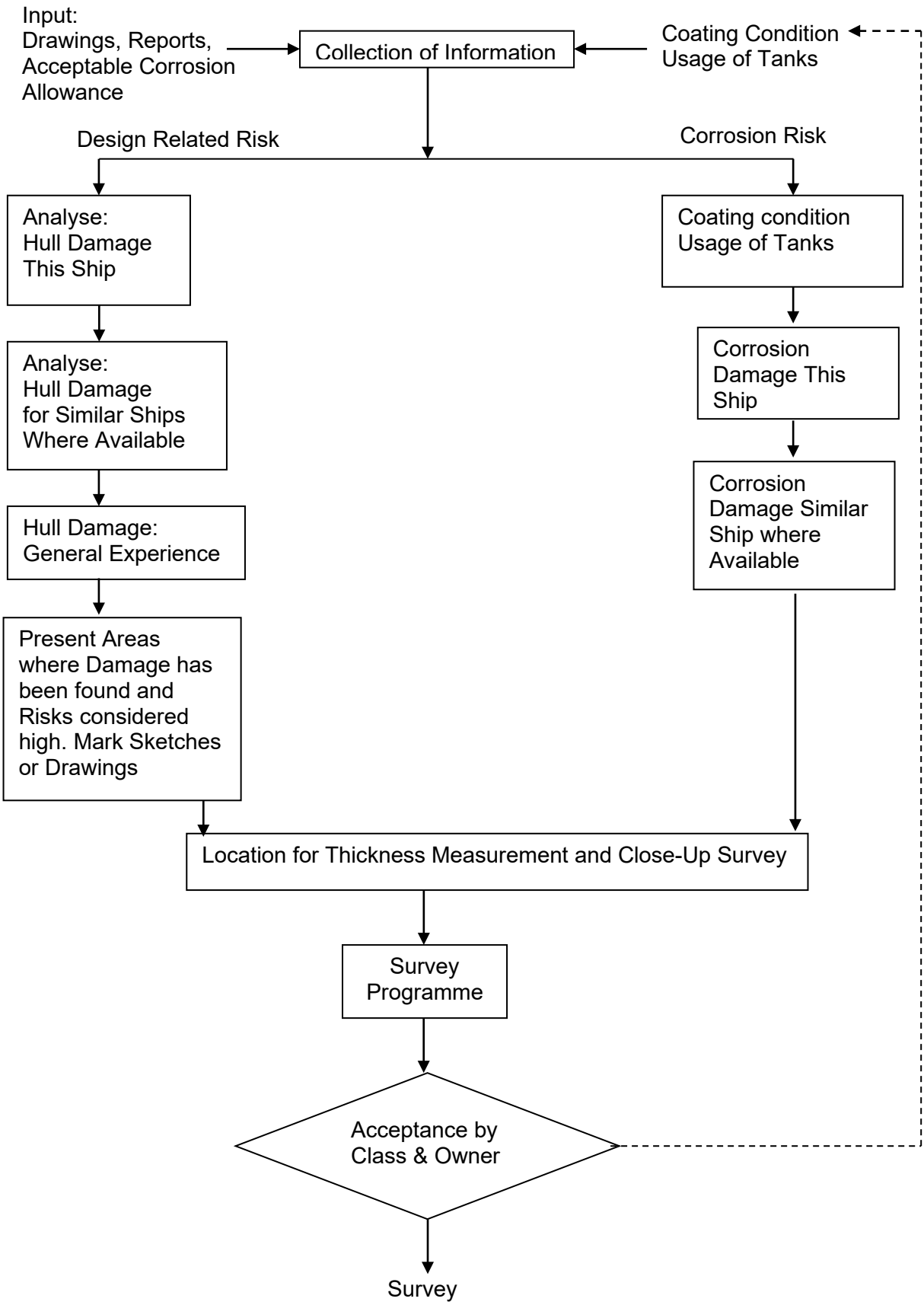

Figure 1: Technical Assessment and the Survey Planning Process

Z10.1
(cont'd)

LOCATION: Connection of longitudinals to transverse webs

EXAMPLE No. 1 : Web and flat bar fractures at cut-outs for longitudinal stiffener connections

TYPICAL DAMAGE | **PROPOSED REPAIR**

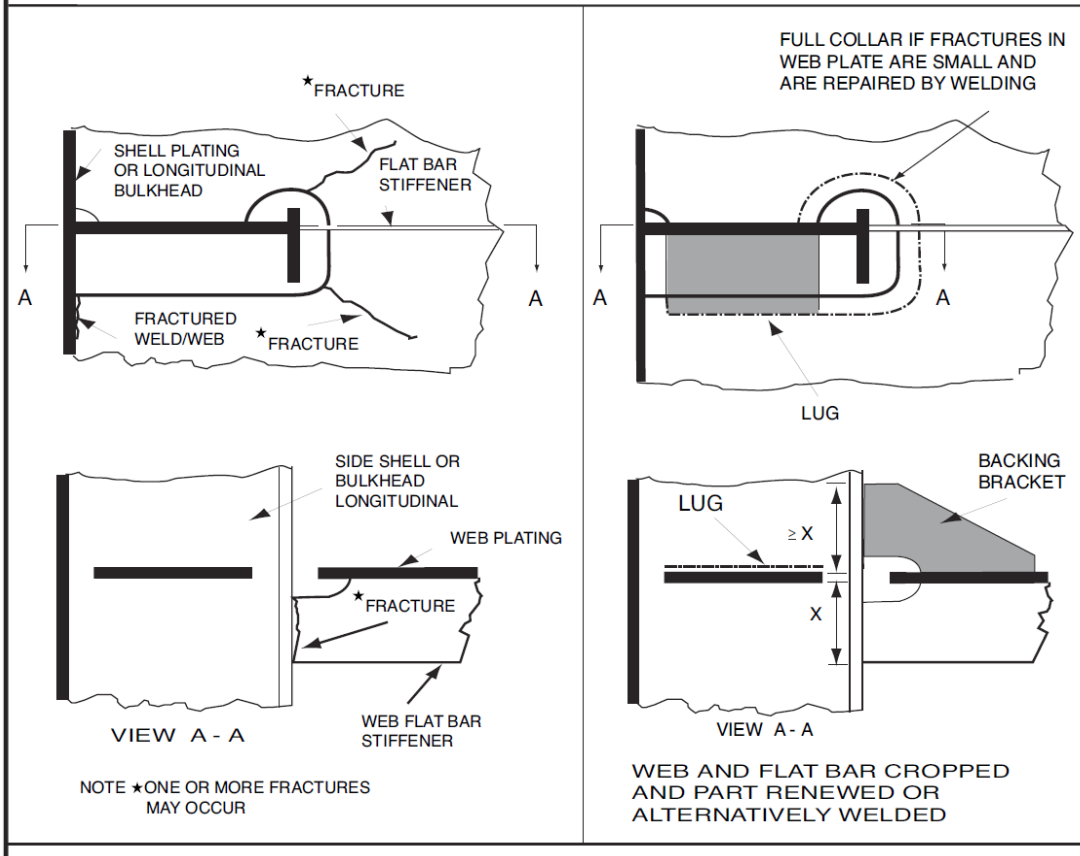

FACTORS CONTRIBUTING TO DAMAGE

1. Asymmetrical connection of flat bar stiffener resulting in high peak stresses at the heel of the stiffener under fatigue loading.
2. Insufficient area of connection of longitudinal to web plate.
3. Defective weld at return around the plate thickness.
4. High localised corrosion at areas of stress concentration such as flat bar stiffener connections, corners of cut-out for the longitudinal and connection of web to shell at cut-outs.
5. High stress in the web of the transverse.
6. Dynamic sea way load/ship motions.

FIGURE 1	TANKER STRUCTURE CO-OPERATIVE FORUM SUBJECT: CATALOGUE OF STRUCTURAL DETAILS	FIGURE 1

Figure 2: Typical Damage and Repair Example (Reproduced from Ref. 1)

End of Annex I

Z10.1
(cont'd)

ANNEX II

Recommended Procedures for Thickness Measurements of Oil Tankers, Ore/Oil Ships and etc.*

*
Note: Annex II is recommendatory.

Z10.1
(cont'd)

Sheet 1

CONTENTS

Sheet 1	-	Contents
Sheet 2	-	Instructions
Sheet 3	-	General Particulars

REPORTS

Sheet 4	-	Report TM1-T for recording the thickness measurements of all deck plating, all bottom shell plating and side shell plating
Sheet 5	-	Report TM2-T (i) for recording the thickness measurement of shell and deck plating at transverse sections - strength deck and sheerstrake plating
Sheet 6	-	Report TM2-T (ii) for recording the thickness measurement of shell and deck plating at transverse sections - shell plating
Sheet 7	-	Report TM3-T for recording the thickness measurement of longitudinal members at transverse sections
Sheet 8	-	Report TM4-T recording the thickness measurement of transverse structural members
Sheet 9	-	Report TM5-T for recording the thickness measurement of W.T./O.T. transverse bulkheads
Sheet 10	-	Report TM6-T for recording the thickness measurement of miscellaneous structural members

GUIDANCE

Sheet 11	-	Oil tanker typical transverse sections. The diagram includes details of the items to be measured and the report forms to be used.
Sheet 12	-	Ore/Oil ship typical transverse section. The diagram includes details of the items to be measured and the report forms to be used.
Sheet 13	-	Transverse section outline. The diagram may be used for those ships where the diagrams on sheet 11 and sheet 12 are not suitable
Sheet 14	-	Oil tank and Ore/Oil Ship, diagrams showing the typical longitudinal members in a transverse section
Sheet 15	-	Transverse sections of oil tankers and ore/oil ships showing typical areas for thickness measurement in association with close-up survey requirements

Z10.1
(cont'd)

Sheet 2

INSTRUCTIONS

Recommended Procedures for Thickness Measurements of Oil Tankers, Ore/Oil Ships, etc.

1. This document is to be used for recording thickness measurements as required by IACS Unified Requirement Z10.1.

2. Reporting forms TM1-T, TM2-T, TM3-T, TM4-T, TM5-T and TM6-T (sheets 4-10) are to be used for recording thickness measurements and the maximum allowable diminution is to be stated.

   The maximum allowable diminution could be stated in an attached document.

3. The remaining sheets 11-15 are guidance diagrams and notes relating to the reporting forms and the procedure for the thickness measurements.

Sheet 3

Z10.1
(cont'd)

GENERAL PARTICULARS

Ship's name:-

IMO Number:-

Class Identification number:-

Port of registry:-

Gross tons:-

Deadweight:-

Date of build:-

Classification society:-

Name of Firm performing thickness measurement:-

Thickness measurement firm certified by:-

Certificate No.:-

Certificate valid from.....to.....

Place of measurement:-

First date of measurement:-

Last date of measurement:-

Special survey/intermediate survey due:-*

Details of measurement equipment:-

Qualification of operator:-

Report Number:- consisting of.....Sheets

Names of operator:-	.....	Name of surveyor:-	.....
Signature of operator:-	.....	Signature of surveyor:-	.....
Firm official stamp:-	.....	Classification Society Official Stamp:-	.....

* Delete as appropriate

Z10.1 (cont'd) **TM1-T**

Report on THICKNESS MEASUREMENT of ALL DECK PLATING, ALL BOTTOM SHELL PLATING or SIDE SHELL PLATING* (* - delete as appropriate)

Sheet 4

Ship's name..... Class Identity No. ..... Report No. .....

STRAKE POSITION																	
PLATE POSITION	No. or Letter	Org. Thk. mm	Forward Reading						Aft Reading						Mean Diminution %		Maximum Allowable Diminution
			Gauged		Diminution P		Diminution S		Gauged		Diminution P		Diminution S				
			P	S	mm	%	mm	%	P	S	mm	%	mm	%	P	S	mm
12th forward																	
11th																	
10th																	
9th																	
8th																	
7th																	
6th																	
5th																	
4th																	
3rd																	
2nd																	
1st																	
Amidships																	
1st aft																	
2nd																	
3rd																	
4th																	
5th																	
6th																	
7th																	
8th																	
9th																	
10th																	
11th																	
12th																	

Operators Signature..... NOTES – See Reverse

Z10.1
(cont'd)

NOTES

1. This report is to be used for recording the thickness measurement of:-

   A - All strength deck plating within the cargo area.

   B - All keel, bottom shell plating and bilge plating within the cargo area.

   C - Side shell plating including selected wind and water strakes outside cargo area.

   D - All wind and water strakes within cargo area.

2. The strake position is to be clearly indicated as follows:-

   2.1 For strength deck indicate the number of the strake of plating inboard from the stringer plate.

   2.2 For bottom plating indicate the number of the strake of plating outboard from the keel plate.

   2.3 For side shell plating give number of the strake of plating below sheerstrake and letter as shown on shell expansion.

3. For oil tankers all deck plating strakes are to be recorded, for ore/oil ships only the deck plating strakes outside line of openings are to be recorded.

4. Measurements are to be taken at the forward and aft areas of all and where plates cross ballast/cargo tank boundaries separate measurements for the area of plating in way of each type of tank are to be recorded.

5. The single measurements recorded are to represent the average of multiple measurements.

6. The maximum allowable diminution could be stated in an attached document.

Z10.1 (cont'd) **TM2-T (i)**

Report on THICKNESS MEASUREMENT OF SHELL AND DECK PLATING (one, two or three transverse sections)

Sheet 5

Ship's name..... Class Identity No. ..... Report No. .....

STRENGTH DECK AND SHEERSTRAKE PLATING																												
	FIRST TRANSVERSE SECTION AT FRAME NUMBER									SECOND TRANSVERSE SECTION AT FRAME NUMBER									THIRD TRANSVERSE SECTION AT FRAME NUMBER								
STRAKE POSITION	No. or Letter	Org. Thk.	Max. Alwb. Dim.	Gauged		Diminution P		Diminution S		No. or Letter	Org. Thk.	Max. Alwb. Dim.	Gauged		Diminution P		Diminution S		No. or Letter	Org. Thk.	Max. Alwb. Dim.	Gauged		Diminution P		Diminution S	
		mm	mm	P	S	mm	%	mm	%		mm	mm	P	S	mm	%	mm	%		mm	mm	P	S	mm	%	mm	%
Stringer Plate																												
1st strake inboard																												
2nd																												
3rd																												
4th																												
5th																												
6th																												
7th																												
8th																												
9th																												
10th																												
11th																												
12th																												
13th																												
14th																												
centre strake																												
sheer strake																												
TOPSIDE TOTAL																												

Operators Signature..... NOTES – See Reverse

Z10.1
(cont'd)

NOTES

1. This report form is to be used for recording the thickness measurements of:

   Strength deck plating and sheerstrake plating transverse sections:

   One, two or three sections within the cargo area comprising of the structural items (1), (2) and (3) as shown on the diagrams of typical transverse sections.

2. For oil tankers all deck plating strakes are to be recorded and for ore/oil ships only the deck plating strakes outside the line of openings are to be recorded.

3. The topside area comprises deck plating, stringer plate and sheerstrake (including rounded gunwales).

4. The exact frame station of measurement is to be stated.

5. The single measurements recorded are to represent the average of multiple measurements.

6. The maximum allowable diminution could be stated in an attached document.

Z10.1 TM2-T (ii) (cont'd)

Report on THICKNESS MEASUREMENT OF SHELL AND DECK PLATING (one, two or three transverse sections)

Sheet 6

Ship's name..... Class Identity No. ..... Report No. .....

SHELL PLATING																												
	FIRST TRANSVERSE SECTION AT FRAME NUMBER									SECOND TRANSVERSE SECTION AT FRAME NUMBER									THIRD TRANSVERSE SECTION AT FRAME NUMBER								
STRAKE POSITION	No. or Letter	Org. Thk.	Max. Alwb. Dim.	Gauged		Diminution P		Diminution S		No. or Letter	Org. Thk.	Max. Alwb. Dim.	Gauged		Diminution P		Diminution S		No. or Letter	Org. Thk.	Max. Alwb. Dim.	Gauged		Diminution P		Diminution S	
		mm	mm	P	S	mm	%	mm	%		mm	mm	P	S	mm	%	mm	%		mm	mm	P	S	mm	%	mm	%
1st below sheer strake																												
2nd																												
3rd																												
4th																												
5th																												
6th																												
7th																												
8th																												
9th																												
10th																												
11th																												
12th																												
13th																												
14th																												
15th																												
16th																												
17th																												
18th																												
19th																												
20th																												
keel strake																												
BOTTOM TOTAL																												

Operators Signature..... NOTES – See Reverse

Z10.1
(cont'd)

NOTES

1. This report form is to be used for recording the thickness measurements of:

   Shell plating transverse sections:

   One, two or three sections within the cargo area comprising of the structural items (4), (5) and (6) and (7) as shown on the diagrams of typical transverse sections.

2. The bottom area comprises keel, bottom and bilge plating.

3. The exact frame station of measurement is to be stated.

4. The single measurements recorded are to represent the average of multiple measurements.

5. The maximum allowable diminution could be stated in an attached document.

Z10.1 (cont'd) **TM3-T**

Report on THICKNESS MEASUREMENT OF LONGITUDINAL MEMBERS (one, two or three transverse sections)

Sheet 7

Ship's name..... Class Identity No. ..... Report No. .....

	FIRST TRANSVERSE SECTION AT FRAME NUMBER									SECOND TRANSVERSE SECTION AT FRAME NUMBER									THIRD TRANSVERSE SECTION AT FRAME NUMBER								
STRUCTURAL MEMBER	Item No.	Org. Thk.	Max. Alwb. Dim.	Gauged		Diminution P		Diminution S		Item No.	Org. Thk.	Max. Alwb. Dim.	Gauged		Diminution P		Diminution S		Item No.	Org. Thk.	Max. Alwb. Dim.	Gauged		Diminution P		Diminution S	
		mm	mm	P	S	mm	%	mm	%		mm	mm	P	S	mm	%	mm	%		mm	mm	P	S	mm	%	mm	%

Operators Signature..... NOTES – See Reverse

Z10.1
(cont'd)

NOTES

1. This report is to be used for recording the thickness measurements of:

   Longitudinal Members at transverse sections:

   One, two or three sections within the cargo area comprising of the appropriate structural items (8) to (20) as shown on the diagrams of typical transverse sections.

2. The exact frame station of measurement is to be stated.

3. The single measurements recorded are to represent the average of multiple measurements.

4. The maximum allowable diminution could be stated in an attached document.

Z10.1 (cont'd) **TM4-T**

Report on THICKNESS MEASUREMENT OF TRANSVERSE STRUCTURAL MEMBERS
In the cargo oil and water ballast tanks within the cargo tank length

Sheet 8

Ship's name..... Class Identity No. ..... Report No. .....

TANK DESCRIPTION:

LOCATION OF STRUCTURE:

STRUCTURAL MEMBER	ITEM	Original Thickness mm	Max. Alwb. Dim. mm	Gauged		Diminution P		Diminution S	
				P	S	mm	%	mm	%

Operators Signature.....

NOTES – See Reverse

Z10.1
(cont'd)

NOTES

1. This report is to be used for recording the thickness measurements of transverse structural members, comprising of the appropriate structural items (25) to (33) as shown on diagrams of typical transverse section.

2. Guidance for areas of measurement is indicated on sheet 15 of this document.

3. The single measurements recorded are to represent the average of multiple measurements.

4. The maximum allowable diminution could be stated in an attached document.

Z10.1 TM5-T (cont'd)

Report on THICKNESS OF W.T./O.T. TRANSVERSE BULKHEADS within the cargo tank or cargo hold spaces

Sheet 9

Ship's name..... Class Identity No. ..... Report No. .....

TANK/HOLD DESCRIPTION:

LOCATION OF STRUCTURE: FRAME NO.:

STRUCTURAL COMPONENT (PLATING/STIFFENER)	Original Thickness mm	Max. Alwb. Dim. mm	Gauged		Diminution P		Diminution S	
			Port	Starboard	mm	%	mm	%

Operators Signature..... NOTES – See Reverse