TM1-BC(CSR)

Z10.2
(cont'd)

Report on THICKNESS MEASUREMENT of ALL DECK PLATING, ALL BOTTOM PLATING or SIDE SHELL PLATING* (* - delete as appropriate)

Sheet 4

Ship's name..... Class Identity No..... Report No.....

STRAKE POSITION																		
PLATE POSITION	No. or Letter	As Built Thk. mm	Voluntary Thickness Addition mm	Renewal Thickness mm (a)	Forward Reading						Aft Reading						Mean Remaining Corr. Addition, mm [(c1)+(c2)]/2	
					Gauged Thk. mm (b1)		Remaining Corr. Addition, mm (c1)=(b1)-(a)				Gauged Thk. mm (b2)		Remaining Corr. Addition, mm (c2)=(b2)-(a)					
					P	S	P		S		P	S	P		S		P	S
12th forward																		
11th																		
10th																		
9th																		
8th																		
7th																		
6th																		
5th																		
4th																		
3rd																		
2nd																		
1st																		
Amidships																		
1st aft																		
2nd																		
3rd																		
4th																		
5th																		
6th																		
7th																		
8th																		
9th																		
10th																		
11th																		
12th																		

Operators Signature..... NOTES – See Reverse

Z10.2
(cont'd)

NOTES TO REPORT TM1-BC(CSR)

1. This report is to be used for recording the thickness measurement of:-

   A - All strength deck plating within cargo length area.

   B - Keel, bottom shell plating and bilge plating within the cargo length area.

   C - Side shell plating that is all wind and water strakes within the cargo length area.

   D - Side shell plating that is selected wind and water strakes outside the cargo length area.

2. The strake position is to be clearly indicated as follows:-

   2.1 For strength deck indicate the number of the strake of plating inboard from the stringer plate.

   2.2 For bottom plating indicate the number of the strake of plating outboard from the keel plate.

   2.3 For side shell plating give number of the strake of plating sheerstrake and letter as shown on shell expansion.

3. Only the deck plating strakes outside line of openings are to be recorded.

4. Measurements are to be taken at the forward and aft areas of all plates and the single measurements recorded are to represent the average of multiple measurements.

5. The remaining corrosion addition is to be recorded with result of gauged thickness minus renewal thickness. If the result is negative, the structure in way shall be renewed, and the mark "R" is to be indicated in the right-hand column. If the result is between 0 and 0.5 mm (0 included), the structure in way shall be additional gauged, and the mark "S" is to be indicated in the right-hand column.

Z10.2
(cont'd)

TM2-BC(CSR) (i) **Report on THICKNESS MEASUREMENT OF SHELL AND DECK PLATING (one, two or three transverse sections)**

Sheet 5

Ship's name..... Class Identity No. ..... Report No. .....

STRENGTH DECK AND SHEERSTRAKE PLATING

STRAKE POSITION	FIRST TRANSVERSE SECTION AT FRAME NUMBER										SECOND TRANSVERSE SECTION AT FRAME NUMBER										THIRD TRANSVERSE SECTION AT FRAME NUMBER									
	No. or Letter	As Built Thk. mm	Vol. Thk. Add. mm	Ren. Thk. mm (a)	Gauged Thk. mm (b)		Remaining Corr. Addition, mm (b)-(a)				No. or Letter	As Built Thk. mm	Vol. Thk. Add. mm	Ren. Thk. mm (a)	Gauged Thk. mm (b)		Remaining Corr. Addition, mm (b)-(a)				No. or Letter	As Built Thk. mm	Vol. Thk. Add. mm	Ren. Thk. mm (a)	Gauged Thk. mm (b)		Remaining Corr. Addition, mm (b)-(a)			
					P	S	P		S						P	S	P		S						P	S	P		S	
Stringer Plate																														
1st strake inboard																														
2nd																														
3rd																														
4th																														
5th																														
6th																														
7th																														
8th																														
9th																														
10th																														
11th																														
12th																														
13th																														
14th																														
centre strake																														
sheer strake																														
TOPSIDE TOTAL																														

Operators Signature..... NOTES – See Reverse

Z10.2
(cont'd)

NOTES TO REPORT TM2-BC(CSR) (i)

1. This report is to be used for recording the thickness measurement of:-

   Strength deck plating and sheerstrake plating transverse sections:-

   One, two or three sections within the cargo length area, comprising of the structural items (1), (2) and (3) as shown on the diagram of typical transverse section.

2. Only the deck plating strakes outside the line of openings are to be recorded.

3. The topside area comprises deck plating, stringer plate and sheerstrake (including rounded gunwales).

4. The exact frame station of measurement is to be stated.

5. The single measurements recorded are to represent the average of multiple measurements.

6. The remaining corrosion addition is to be recorded with result of gauged thickness minus renewal thickness. If the result is negative, the structure in way shall be renewed, and the mark "R" is to be indicated in the right-hand column. If the result is between 0 and 0.5 mm (0 included), the structure in way shall be additional gauged, and the mark "S" is to be indicated in the right-hand column.

Z10.2
(cont'd)

TM2-BC(CSR) (ii) **Report on THICKNESS MEASUREMENT OF SHELL PLATING (one, two or three transverse sections)**

Sheet 6

Ship's name..... Class Identity No. ..... Report No. .....

SHELL PLATING																																
	FIRST TRANSVERSE SECTION AT FRAME NUMBER										SECOND TRANSVERSE SECTION AT FRAME NUMBER										THIRD TRANSVERSE SECTION AT FRAME NUMBER									
STRAKE POSITION	No. or Letter	As Built Thk. mm	Vol. Thk. Add. mm	Ren. Thk. mm (a)	Gauged Thk. mm (b)		Remaining Corr. Addition, mm (b)-(a)				No. or Letter	As Built Thk. mm	Vol. Thk. Add. mm	Ren. Thk. mm (a)	Gauged Thk. mm (b)		Remaining Corr. Addition, mm (b)-(a)				No. or Letter	As Built Thk. mm	Vol. Thk. Add. mm	Ren. Thk. mm (a)	Gauged Thk. mm (b)		Remaining Corr. Addition, mm (b)-(a)			
					P	S	P		S						P	S	P		S						P	S	P		S	
1st below sheer strake																														
2nd																														
3rd																														
4th																														
5th																														
6th																														
7th																														
8th																														
9th																														
10th																														
11th																														
12th																														
13th																														
14th																														
15th																														
16th																														
17th																														
18th																														
19th																														
20th																														
Keel strake																														
BOTTOM TOTAL																														

Operators Signature..... NOTES – See Reverse

Z10.2
(cont'd)

NOTES TO REPORT TM2-BC(CSR) (ii)

1. This report is to be used for recording the thickness measurement of:-

   Shell plating transverse sections:-

   One, two or three sections within cargo length area comprising of the structural items (4), (5), (6) and (7) as shown on the diagram of typical transverse section.

2. The bottom area comprises keel, bottom and bilge plating.

3. The exact frame station of measurement is to be stated.

4. The single measurements recorded are to represent the average of multiple measurements.

5. The remaining corrosion addition is to be recorded with result of gauged thickness minus renewal thickness. If the result is negative, the structure in way shall be renewed, and the mark "R" is to be indicated in the right-hand column. If the result is between 0 and 0.5 mm (0 included), the structure in way shall be additional gauged, and the mark "S" is to be indicated in the right-hand column.

Z10.2
(cont'd)

TM3-BC(CSR) **Report on THICKNESS MEASUREMENT OF LONGITUDINAL MEMBERS**
(one, two or three transverse sections)

Sheet 7

Ship's name..... Class Identity No. ..... Report No. .....

	FIRST TRANSVERSE SECTION AT FRAME NUMBER										SECOND TRANSVERSE SECTION AT FRAME NUMBER										THIRD TRANSVERSE SECTION AT FRAME NUMBER									
STRUCTURAL MEMBER	Item No.	As Built Thk. mm	Vol. Thk. Add. mm	Ren. Thk. mm (a)	Gauged Thk. mm (b)		Remaining Corr. Addition, mm (b)-(a)				Item No.	As Built Thk. mm	Vol. Thk. Add. mm	Ren. Thk. mm (a)	Gauged Thk. mm (b)		Remaining Corr. Addition, mm (b)-(a)				Item No.	As Built Thk. mm	Vol. Thk. Add. mm	Ren. Thk. mm (a)	Gauged Thk. mm (b)		Remaining Corr. Addition, mm (b)-(a)			
					P	S	P		S						P	S	P		S						P	S	P		S	

Operators Signature..... NOTES – See Reverse

Z10.2
(cont'd)

NOTES TO REPORT TM3-BC(CSR)

1. This report is to be used for recording the thickness measurement of:-

   Longitudinal Members at transverse sections:-

   One, two, or three sections within the cargo length area, comprising of the appropriate structural items (8) to (20) as shown on diagram of typical transverse section.

2. The exact frame station of measurement is to be stated.

3. The single measurements recorded are to represent the average of multiple measurements.

4. The remaining corrosion addition is to be recorded with result of gauged thickness minus renewal thickness. If the result is negative, the structure in way shall be renewed, and the mark "R" is to be indicated in the right-hand column. If the result is between 0 and 0.5 mm (0 included), the structure in way shall be additional gauged, and the mark "S" is to be indicated in the right-hand column.

Z10.2
(cont'd)

TM4-BC(CSR) **Report on THICKNESS MEASUREMENT OF TRANSVERSE STRUCTURAL MEMBERS**
In the double bottom, hopper side and topside water ballast tanks

Sheet 8

Ship's name..... Class Identity No. ..... Report No. .....

TANK DESCRIPTION:

LOCATION OF STRUCTURE

STRUCTURAL MEMBER	ITEM	As Built Thickness mm	Voluntary Thickness Addition mm	Renewal Thickness mm (a)	Gauged Thickness mm (b)		Remaining Corr. Addition mm (b)-(a)			
					P	S	P		S	

Operators Signature..... NOTES – See Reverse

Z10.2
(cont'd)

NOTES TO REPORT TM4-BC(CSR)

1. This report is to be used for recording the thickness measurement of transverse structural members, comprising of the appropriate structural items (23) to (25) as shown on diagram of typical transverse section.

2. Guidance for areas if measurement is indicated on the diagrams shown on sheet 14 of this document.

3. The single measurements recorded are to represent the average of multiple measurements.

4. The remaining corrosion addition is to be recorded with result of gauged thickness minus renewal thickness. If the result is negative, the structure in way shall be renewed, and the mark "R" is to be indicated in the right-hand column. If the result is between 0 and 0.5 mm (0 included), the structure in way shall be additional gauged, and the mark "S" is to be indicated in the right-hand column.

Z10.2
(cont'd)

TM5-BC(CSR) **Report on THICKNESS OF CARGO HOLD TRANSVERSE BULKHEADS**

Sheet 9

Ship's name..... Class Identity No. ..... Report No. .....

HOLD DESCRIPTION:

LOCATION OF STRUCTURE: FRAME NO.:

STRUCTURAL COMPONENT (PLATING/STIFFENER)	As Built Thickness mm	Voluntary Thickness Addition mm	Renewal Thickness mm (a)	Gauged Thickness mm (b)		Remaining Corr. Addition mm (b)-(a)			
				P	S	P		S	

Operators Signature..... NOTES – See Reverse

Z10.2
(cont'd)

NOTES TO REPORT TM5-BC(CSR)

1. This report form is to be used for recording the thickness measurement of cargo hold transverse bulkheads.

2. Guidance for areas of measurement is indicated on the diagrams shown on sheet 14 of this document.

3. The single measurements recorded are to represent the average of multiple measurements.

4. The remaining corrosion addition is to be recorded with result of gauged thickness minus renewal thickness. If the result is negative, the structure in way shall be renewed, and the mark "R" is to be indicated in the right-hand column. If the result is between 0 and 0.5 mm (0 included), the structure in way shall be additional gauged, and the mark "S" is to be indicated in the right-hand column.

Z10.2
(cont'd)

TM6-BC(CSR) **Report on THICKNESS MEASUREMENT OF MISCELLANEOUS STRUCTURAL MEMBERS**

Sheet 10

Ship's name..... Class Identity No. ..... Report No. .....

STRUCTURAL MEMBER:										SKETCH
LOCATION OF STRUCTURE:										
Description	As Built Thk. mm	Voluntary Thickness Addition mm	Renewal Thickness mm (a)	Gauged Thickness mm (b)		Remaining Corr. Addition mm (b)-(a)				
				P	S	P		S		

Operators Signature..... NOTES – See Reverse

Z10.2
(cont'd)

NOTES TO REPORT TM6-BC(CSR)

1. This report is to be used for recording the thickness measurement of miscellaneous structural members including the structural items (28), (29) and (30) as shown on diagram of typical transverse section, sheet 12 of this document.

2. Guidance for areas of measurement is indicated on sheet 14 of this document.

3. The single measurements recorded are to represent the average of multiple measurements.

4. The remaining corrosion addition is to be recorded with result of gauged thickness minus renewal thickness. If the result is negative, the structure in way shall be renewed, and the mark "R" is to be indicated in the right-hand column. If the result is between 0 and 0.5 mm (0 included), the structure in way shall be additional gauged, and the mark "S" is to be indicated in the right-hand column.

Z10.2
(cont'd)

TM7-BC(CSR) **Report on THICKNESS MEASUREMENT OF CARGO HOLD TRANSVERSE FRAMES**

Sheet 11

Ship's name..... Class Identity No. ..... Report No. .....

CARGO HOLD NO.																														
	UPPER PART									MID PART										LOWER PART									
FRAME NUMBER	As Built Thk mm	Volun. Thk. Add. mm	Renewal Thickness mm (a)	Gauged Thickness mm (b)		Remaining Corr. Addition mm (b)-(a)				As Built Thk mm	Volun. Thk. Add. mm	Renewal Thickness mm (a)	Gauged Thickness mm (b)		Remaining Corr. Addition mm (b)-(a)				As Built Thk mm	Volun. Thk. Add. mm	Renewal Thickness mm (a)	Gauged Thickness mm (b)		Remaining Corr. Addition mm (b)-(a)			
				P	S	P		S					P	S	P		S						P	S	P		S	

Operators Signature..... NOTES – See Reverse

Z10.2
(cont'd)

NOTES TO REPORT TM7-BC(CSR)

Sheet 11 bis

1. This report is to be used for recording the thickness measurement of:-

   Cargo Hold Transverse Frames

   Structural item number 34 as shown on the diagram of typical transverse section.

2. Guidance for areas of measurement is indicated on the diagrams shown on sheet 14 of this document.
   The single measurement recorded are to represent the average of multiple measurements.

3. The location and pattern of measurements is to be indicated on the sketches of hold frames shown below.

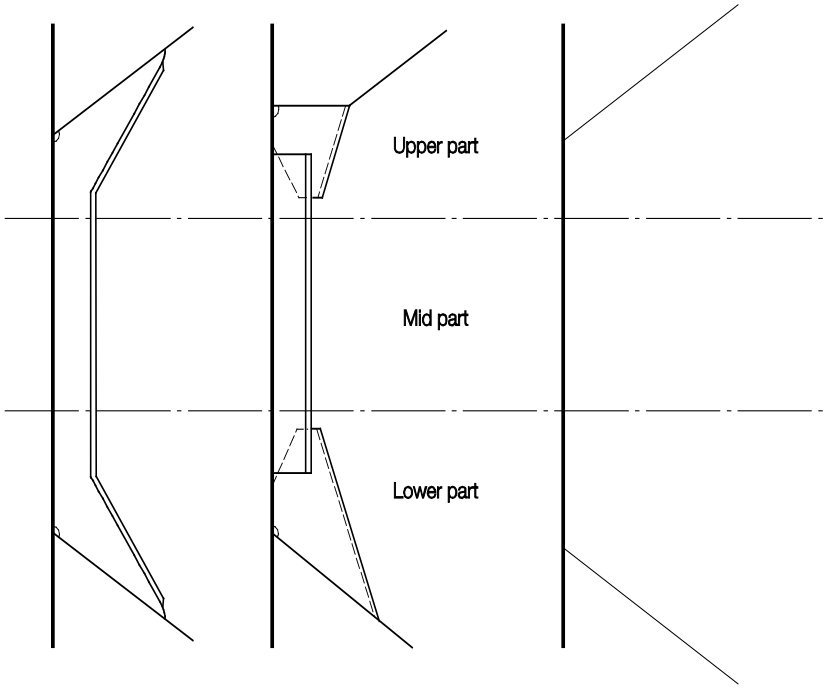

Typical transverse frames in cargo hold
Thickness gauging area Ⓐ

Non - typical transverse
frame in cargo hold
Thickness gauging area Ⓐ

4. The remaining corrosion addition is to be recorded with result of gauged thickness minus renewal thickness. If the result is negative, the structure in way shall be renewed, and the mark "R" is to be indicated in the right-hand column. If the result is between 0 and 0.5 mm (0 included), the structure in way shall be additional gauged, and the mark "S" is to be indicated in the right-hand column.

Z10.2
(cont'd)

Sheet 12

Thickness Measurement - Bulk Carriers

Typical transverse section including longitudinal and transverse members

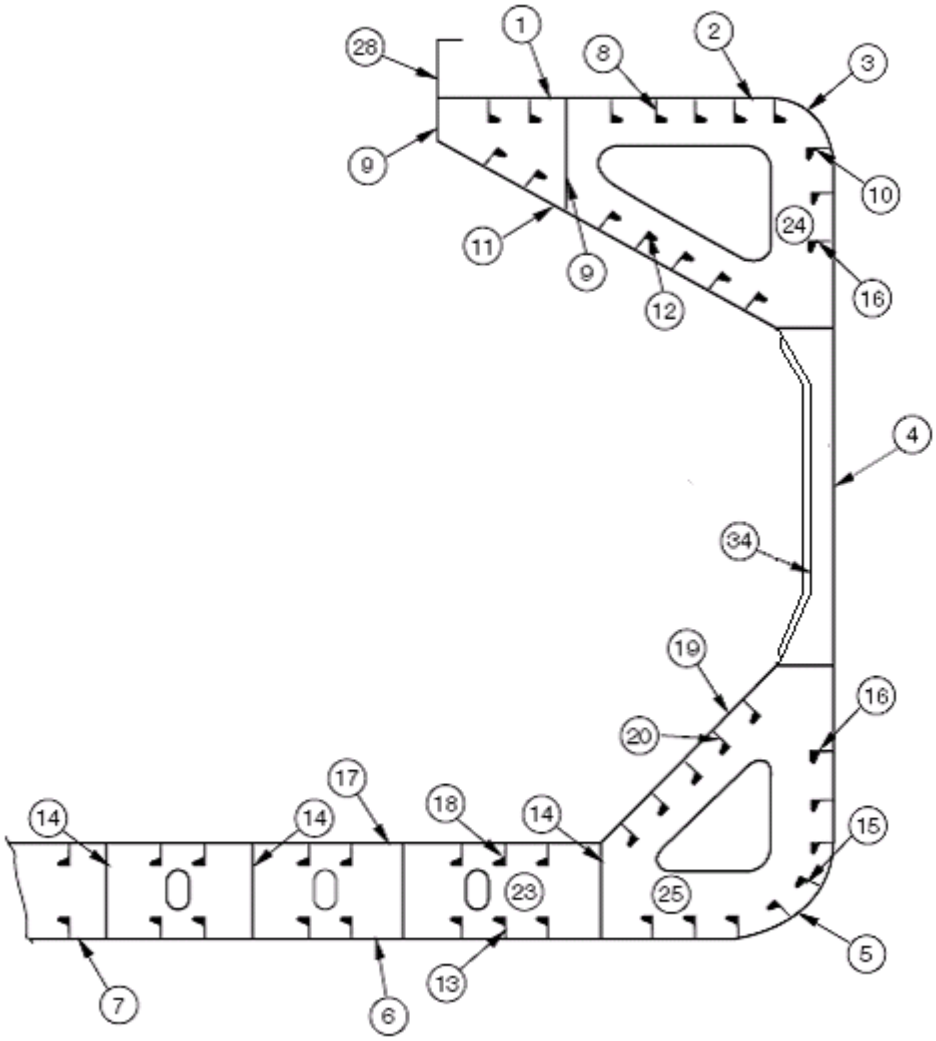

Report on TM2-BC(CSR) (i) & (ii)
1. Strength deck plating
2. Stringer plate
3. Sheerstrake
4. Side shell plating
5. Bilge plating
6. Bottom plating
7. Keel plate

Report on TM3-BC(CSR)	
8. Deck longitudinals	17. Inner bottom plating
9. Deck girders	18. Inner bottom longitudinals
10. Sheerstrake longitudinals	19. Hopper plating
11. Topside tank sloping plating	20. Hopper longitudinals
12. Topside tank sloping plating longitudinals	21.
13. Bottom longitudinals	22.
14. Bottom girders	**Report on TM4-BC(CSR)**
15. Bilge longitudinals	23. Double bottom tank floors
16. Side shell longitudinals, if any	24. Top side tank transverses
	25. Hopper side tank transverses
	26.
	27.

Report on TM6-BC(CSR)
28. Hatch coamings
29. Deck plating between hatches
30. Hatch covers
31.
32.
33.
Report on TM7-BC(CSR)
34.Cargo hold frames

Sheet 13

Z10.2
(cont'd)

Thickness Measurement - Bulk Carriers

Transverse section outline: The diagram may be used for those ships where the diagrams on sheet 12 are not suitable.

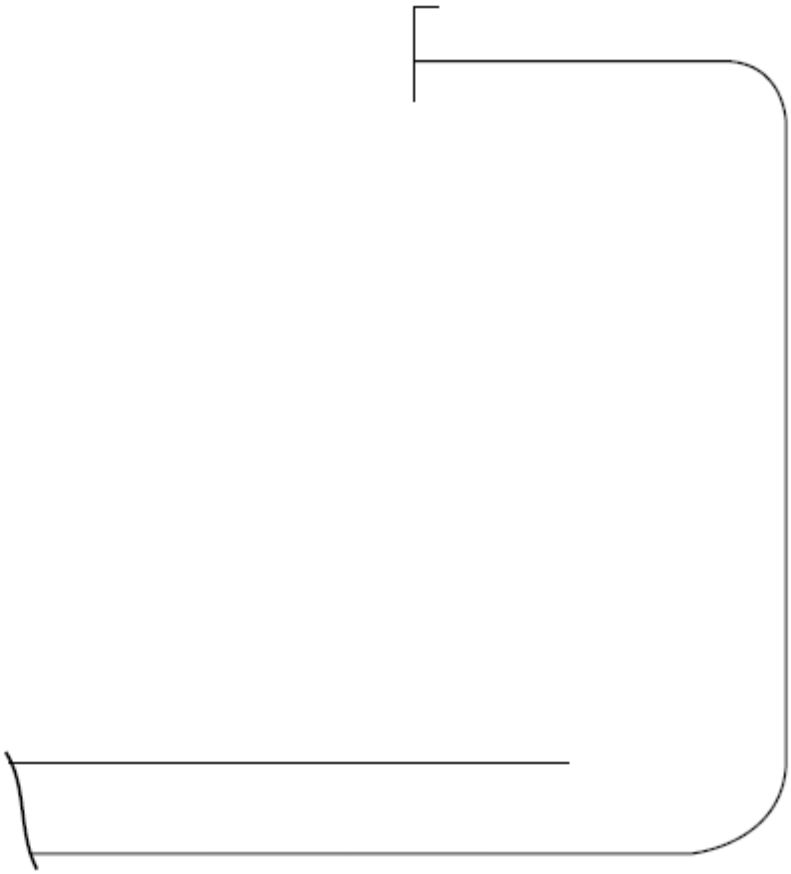

Report on TM2-BC(CSR) (i) & (ii)
1. Strength deck plating
2. Stringer plate
3. Sheerstrake
4. Side shell plating
5. Bilge plating
6. Bottom plating
7. Keel plate

Report on TM3-BC(CSR)	
8. Deck longitudinals	17. Inner bottom plating
9. Deck girders	18. Inner bottom longitudinals
10. Sheerstrake longitudinals	19. Hopper plating
11. Topside tank sloping plating	20. Hopper longitudinals
12. Topside tank sloping plating longitudinals	21.
13. Bottom longitudinals	22.
14. Bottom girders	**Report on TM4-BC(CSR)**
15. Bilge longitudinals	23. Double bottom tank floors
16. Side shell longitudinals, if any	24. Top side tank transverses
	25. Hopper side tank transverses
	26.
	27.

Report on TM6-BC(CSR)
28. Hatch coamings
29. Deck plating between hatches
30. Hatch covers
31.
32.
33.
Report on TM7-BC(CSR)
34.Cargo hold frames

Z10.2 (cont'd)

Close-up Survey and Thickness Measurement Areas

Sheet 14

Typical transverse section

Areas A, B and D

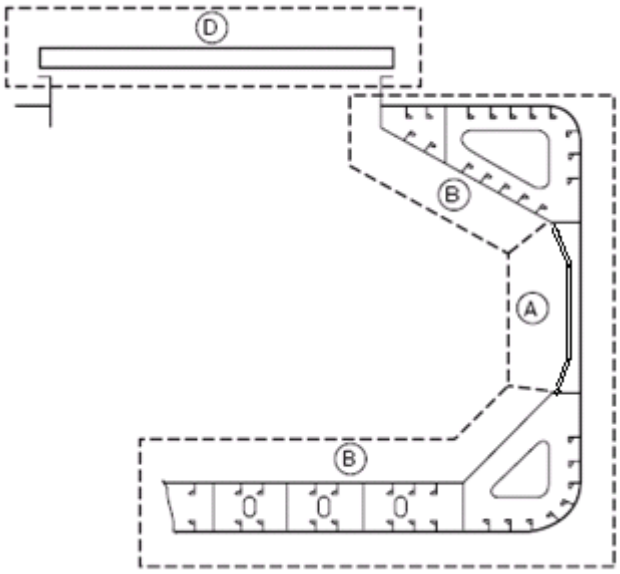

Thickness to be reported on TM3-BC(CSR), TM4-BC(CSR), TM6-BC(CSR) and TM7-BC(CSR) as appropriate

A cargo hold, transverse bulkhead

Area C

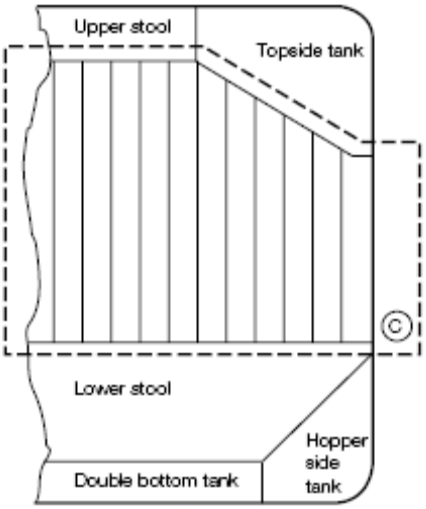

Thickness to be reported on TM5-BC(CSR)

Typical areas of deck plating inside line of hatch openings between cargo hold hatches

Area E

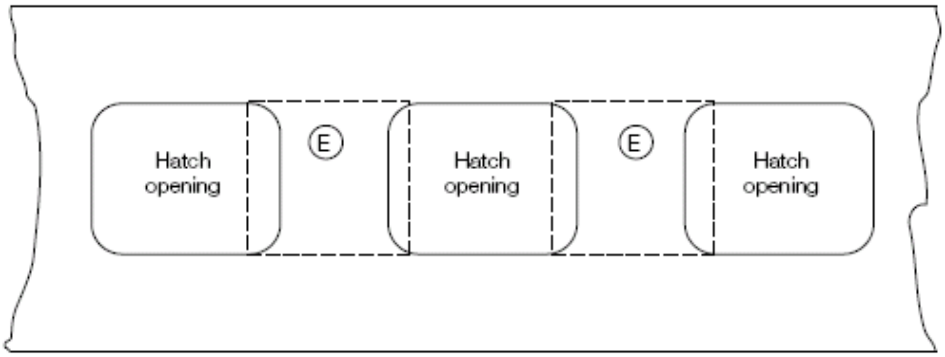

Thickness to be reported on TM6-BC(CSR)

End of Annex II

Z10.2
(cont'd)

ANNEX III

GUIDELINES FOR THE GAUGING OF THE VERTICALLY CORRUGATED TRANSVERSE WATERTIGHT BULKHEAD BETWEEN HOLDS NOS. 1 AND 2

1. Gauging is necessary to determine the general condition of the structure and to define the extent of possible repairs and/or reinforcements of the vertically corrugated transverse watertight bulkhead for verification of the compliance with UR S19.

2. Taking into account the buckling model applied in UR S19 in the evaluation of strength of the bulkhead, it is essential to determine the thickness diminution at the critical levels shown in Figures 1 and 2.

3. The gauging is to be carried out at the levels as described below. To adequately assess the scantlings of each individual vertical corrugation, each corrugation flange, web, shedder plate and gusset plate within each of the levels given below are to be gauged.

Level (a) Ships without lower stool (see Figure 1):

Locations:
- The mid-breadth of the corrugation flanges at approximately 200 mm above the line of shedder plates;
- The middle of gusset plates between corrugation flanges, where fitted;
- The middle of the shedder plates;
- The mid-breadth of the corrugation webs at approximately 200 mm above the line of shedder plates.

Level (b) Ships with lower stool (see Figure 2):

Locations:
- The mid-breadth of the corrugation flanges at approximately 200 mm above the line of shedder plates;
- The middle of gusset plates between corrugation flanges, where fitted;
- The middle of the shedder plates;
- The mid-breadth of the corrugation webs at approximately 200 mm above the line of shedder plates.

Level (c) Ships with or without lower stool (see Figures 1 and 2):

Locations:
- The mid-breadth of the corrugation flanges and webs at about the mid-height of the corrugation.

4. Where the thickness changes within the horizontal levels, the thinner plate is to be gauged.

5. Steel renewal and/or reinforcement is to comply with S19.