Z10.2
(cont'd)

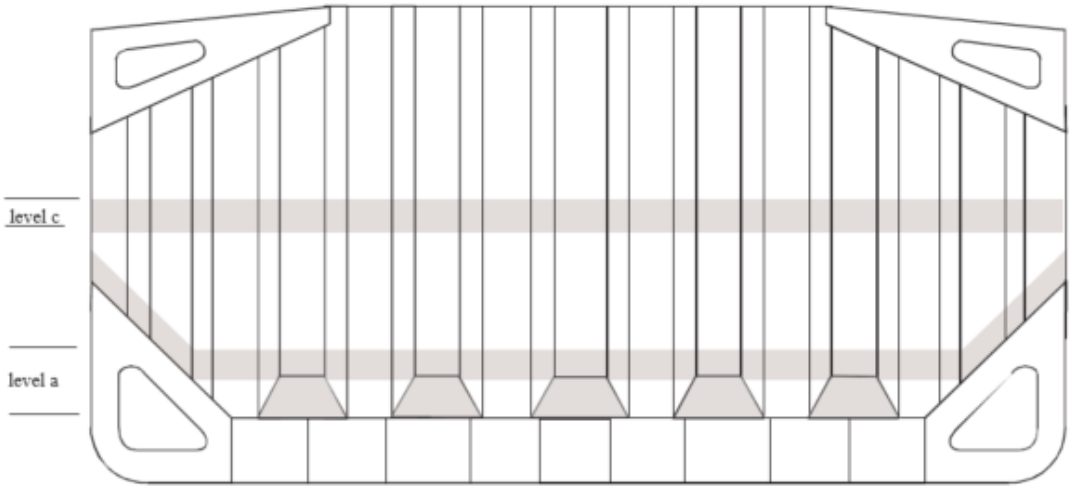

Figure 1

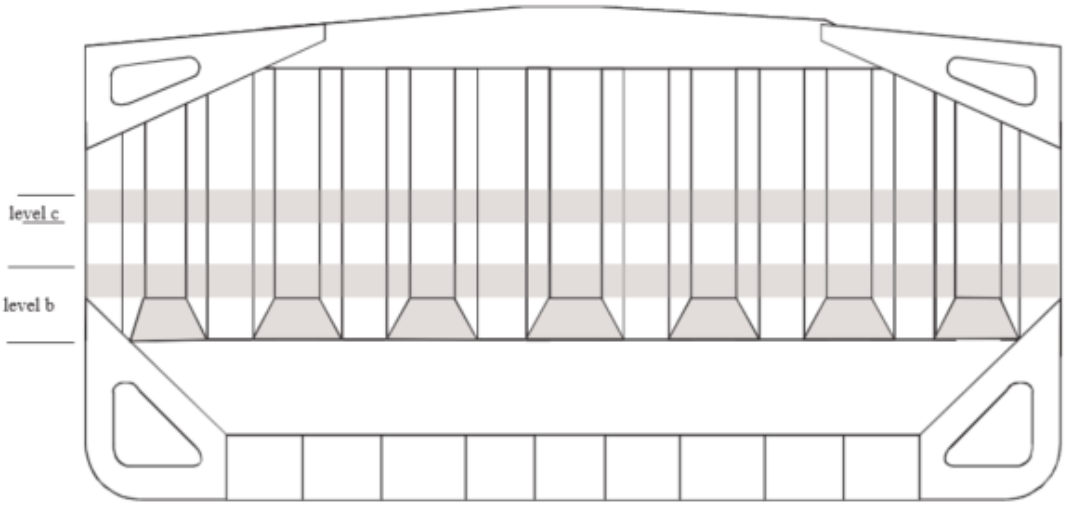

Figure 2

End of
Annex III

Z10.2
(cont'd)

ANNEX IV

ADDITIONAL ANNUAL SURVEY REQUIREMENTS FOR THE FOREMOST CARGO HOLD OF SHIPS SUBJECT TO SOLAS XII/9.1

1 General

1.1 In the case of Bulk Carrier over 5 years of age, the Annual Survey is to include, in addition to the requirements of the Annual Surveys prescribed in chapter 3, an examination of the following items:

1.2 Extent of Survey

1.2.1 For bulk carriers of 5 - 15 years of age:

a) An Overall Survey of the foremost cargo hold, including Close-up Survey of sufficient extent, minimum 25% of frames, is to be carried out to establish the condition of:

- Shell frames including their upper and lower end attachments, adjacent shell plating, and transverse bulkheads.

- Suspect areas identified at previous surveys (see 1.2.9 of UR Z10.2).

b) Where considered necessary by the surveyor as a result of the Overall and Close-up Survey as described in a) above, the survey is to be extended to include a Close-up Survey of all of the shell frames and adjacent shell plating of the cargo hold.

1.2.2 For bulk carriers exceeding 15 years of age:

a) An Overall Survey of the foremost cargo hold, including Close-up Survey is to be carried out to establish the condition of:

- All shell frames including their upper and lower end attachments, adjacent shell plating, and transverse bulkheads.

- Suspect areas identified at previous surveys (see 1.2.9 of UR Z10.2).

1.3 Extent of Thickness Measurement

1.3.1 Thickness measurement is to be carried out to an extent sufficient to determine both general and local corrosion levels at areas subject to Close-up Survey, as described in 1.2.1 a) and 1.2.2. a) above.
The minimum requirement for thickness measurements are suspect areas identified at previous surveys (see 1.2.9 of UR Z10.2).

Where Substantial Corrosion as defined in chapter 1.2.9 is found, the extent of thickness measurements should be increased with the requirements of Table VIII.

1.3.2 The thickness measurement may be dispensed with provided the surveyor is satisfied by the Close-up Survey, that there is no structural diminution and the Protective Coating where fitted remains effective.

Z10.2 (cont'd)

1.4 Special Consideration

1.4.1 Where the protective coating in the foremost cargo hold, as defined by Z.9 is found to be in GOOD condition, the extent of close-up surveys and thickness measurements may be specially considered.

Explanatory note:

For existing bulk carriers, where owners may elect to coat or recoat cargo holds as noted above, consideration may be given to the extent of the close-up and thickness measurement surveys. Prior to the coating of cargo holds of existing ships, scantlings should be ascertained in the presence of a surveyor.

End of Annex IV

Z10.2
(cont'd)

ANNEX V

GUIDELINES FOR THE GAUGING OF SIDE SHELL FRAMES AND BRACKETS IN SINGLE SIDE SKIN BULK CARRIERS REQUIRED TO COMPLY WITH UR S31

1. General

Gauging is necessary to determine the general condition of the structure and to define the extent of possible steel renewals or other measures for the webs and flanges of side shell frames and brackets for verification of the compliance with UR S31.

2. Zones of Side Shell Frames and Brackets

For the purpose of steel renewal, sand blasting and coating, four zones A, B, C and D are defined, as shown in Figure 1.
Zones A & B are considered to be the most critical zones.

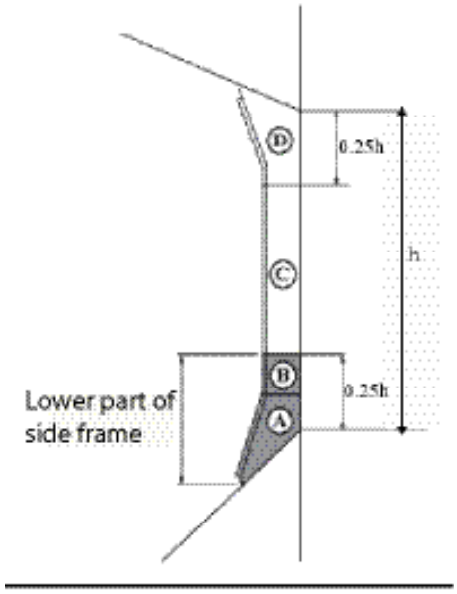

Figure 1 Zones of Side Shell Frames and Brackets

3. Pitting and grooving

Pits can grow in a variety of shapes, some of which would need to be ground before assessment.

Pitting corrosion may be found under coating blisters, which must be removed before inspection.

To measure the remaining thickness of pits or grooving the normal ultrasonic transducer (generally 10mm diameter) will not suffice. A miniature transducer (3 to 5 mm diameter) must be used. Alternatively the gauging firm must use a pit gauge to measure the depth of the pits and grooving and calculate the remaining thickness.

Z10.2 (cont'd)

3.1 Assessment based upon Area

This is the method specified in S31.2.5 and is based upon the intensity determined from Figure 2 below.

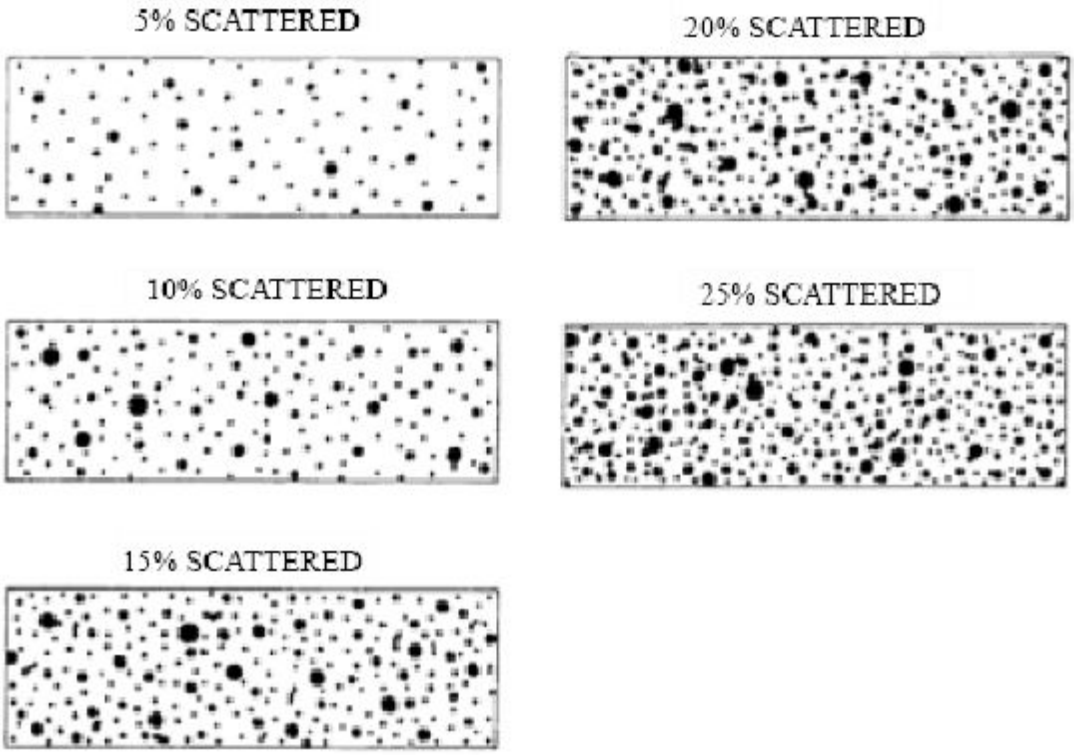

Figure 2 Pitting intensity diagrams (from 5% to 25% intensity)

If pitting intensity is higher than 15% in an area (see Figure 2), then thickness measurements are to be taken to check the extent of the pitting corrosion. The 15% is based upon pitting or grooving on only one side of the plate.

In cases where pitting is evident as defined above (exceeding 15 %) then an area of 300mm diameter or more (or, where this is impracticable on the frame flange or the side shell, hopper tank plating or topside tank plating attached to the side frame, an equivalent rectangular area), at the most pitted part, is to be cleaned to bare metal, and the thickness measured in way of the five deepest pits within the cleaned area. The least thickness measured in way of any of these pits is to be taken as the thickness to be recorded.

The minimum acceptable remaining thickness in any pit or groove is equal to:

- 75% of the as built thickness, for pitting or grooving in the cargo hold side frame webs and flanges.
- 70% of the as built thickness, for pitting or grooving in the side shell, hopper tank and topside tank plating attached to the cargo hold side frame, over a width up to 30mm from each side of it.

Z10.2 (cont'd)

4. Gauging methodology

Numbers of side frames to be measured are equivalent to those of Special Survey or Intermediate Survey corresponding to the ship's age. Representative thickness measurements are to be taken for each zone as specified below.

Special consideration to the extent of the thickness measurements may be given by the Classification Society, if the structural members show no thickness diminution with respect to the as built thicknesses and the coating is found in "as-new" condition (i.e., without breakdown or rusting).

Where gauging readings close to the criteria are found, the number of hold frames to be measured is to be increased.

If renewal or other measures according to S31 are to be applied on individual frames in a hold, then all frames in that hold are to be gauged.

There is a variety of construction methods used for side shell frames in bulk carriers. Some have faceplates (T sections) on the side shell frames, some have flanged plates and some have bulb plates. The use of faceplates and flanged sections is considered similar for gauging purposes in that both the web and faceplate or web and flange plate are to be gauged. If bulb plate has been used, then web of the bulb plate is to be gauged in the normal manner and the sectional modulus has to be specially considered if required.

4.1 Gaugings for Zones A, B & D

Web plating

The gauging pattern for Zones A, B & D are to be a five point pattern. See Figure 3. The 5 point pattern is to be over the depth of the web and the same area vertically. The gauging report is to reflect the average reading.

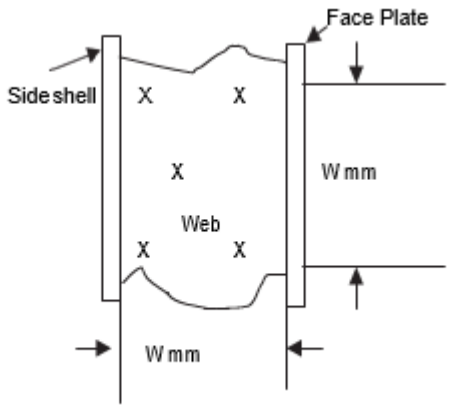

Figure 3 Typical 5 point pattern on the web plate

Z10.2 (cont'd)

4.2 Gaugings for Zone C

Web plating

Depending upon the condition of the web in way of Zone C, the web may be measured by taking 3 readings over the length of Zone C and averaging them. The average reading is to be compared with the allowable thickness. If the web plating has general corrosion then this pattern should be expanded to a five point pattern as noted above.

4.3 Gaugings for section a) and b) (flanges and side shell plating)

Where the lower bracket length or depth does not meet the requirements in UR S12(Rev.3), gaugings are to be taken at sections a) and b) to calculate the actual section modulus required in UR S31.3.4. See Figure 4. At least 2 readings on the flange/faceplate are to be taken in way of each section. At least one reading of the attached shell plating is to be taken on each side of the frame (i.e. fore and aft) in way of section a) and section b).

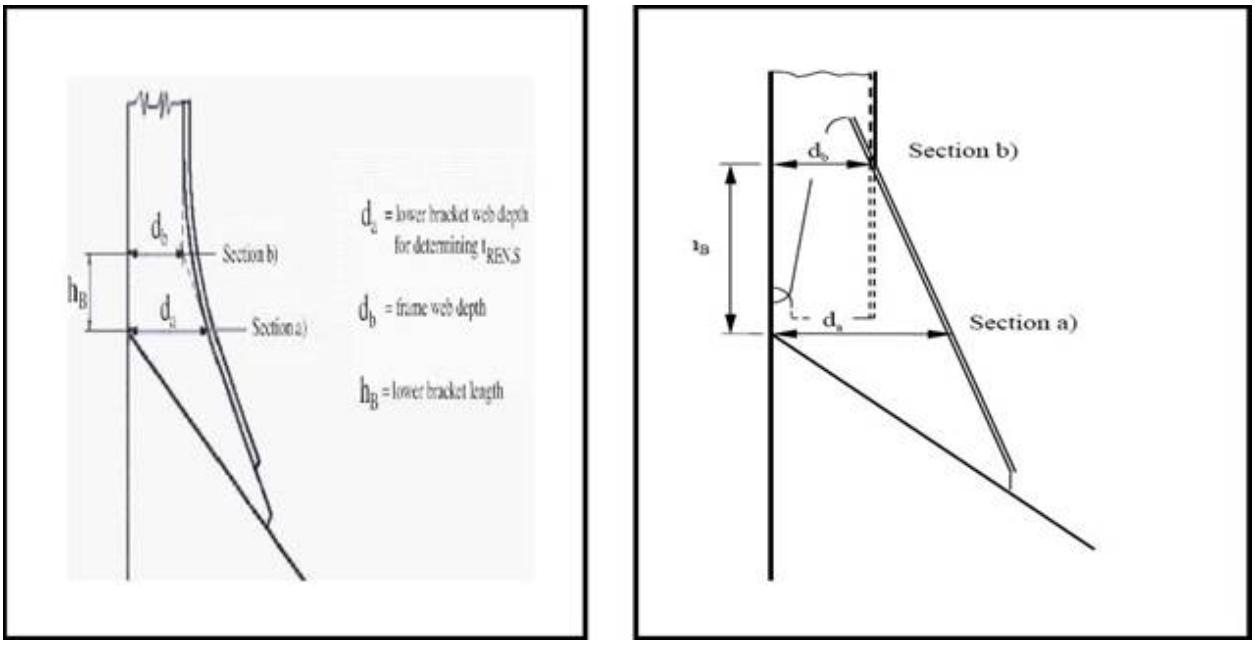

Figure 4 Sections a) and b)

5 Report on Thickness Measurement of Cargo Hold Frames

See form TM7-BC S31 (sheet 11 bis).

End of Annex V

Z10.2
(cont'd)

ANNEX VI

Z10.2
(cont'd)

ANNEX VIA

SURVEY PROGRAMME

Basic information and particulars

Name of ship:
IMO number:
Flag State:
Port of registry:
Gross tonnage:
Deadweight (metric tonnes):
Length between perpendiculars (m):
Shipbuilder:
Hull number:
Classification Society:
Class ID:
Date of build of the ship:
Owner:
Thickness measurement firm:

1 Preamble

1.1 Scope

1.1.1 The present survey programme covers the minimum extent of overall surveys, close-up surveys, thickness measurements and pressure testing within the cargo length area, cargo holds, ballast tanks, including fore and aft peak tanks, required by UR Z10.2.

1.1.2 The arrangements and safety aspects of the survey are to be acceptable to the attending surveyor(s).

1.2 Documentation

All documents used in the development of the survey programme are to be available onboard during the survey as required by section 6.

2 Arrangement of cargo holds, tanks and spaces

This section of the survey programme is to provide information (either in the form of plans or text) on the arrangement of cargo holds, tanks and spaces that fall within the scope of the survey.

3 List of cargo holds, tanks and spaces with information on their use, extent of coatings and corrosion prevention system

Z10.2 (cont'd)

This section of the survey programme is to indicate any changes relating to (and is to update) the information on the use of the holds and tanks of the ship, the extent of coatings and the corrosion prevention system provided in the Survey Planning Questionnaire.

4 Conditions for survey

This section of the survey programme is to provide information on the conditions for survey, e.g. information regarding cargo hold and tank cleaning, gas freeing, ventilation, lighting, etc.

5 Provisions and method of access to structures

This section of the survey programme is to indicate any changes relating to (and is to update) the information on the provisions and methods of access to structures provided in the Survey Planning Questionnaire.

6 List of equipment for survey

This section of the survey programme is to identify and list the equipment that will be made available for carrying out the survey and the required thickness measurements.

7 Survey requirements

7.1 Overall survey

This section of the survey programme is to identify and list the spaces that should undergo an overall survey for this ship in accordance with 2.3.1.

7.2 Close-up survey

This section of the survey programme is to identify and list the hull structures that are to undergo a close-up survey for this ship in accordance with 2.3.2.

8 Identification of tanks for tank testing

This section of the survey programme is to identify and list the cargo holds and tanks that are to undergo tank testing for this ship in accordance with 2.5.

9 Identification of areas and sections for thickness measurements

This section of the survey programme is to identify and list the areas and sections where thickness measurements are to be taken in accordance with 2.2.4.4 and 2.4.1.

10 Minimum thickness of hull structures

This section of the survey programme is to specify the minimum thickness for hull structures of this ship that are subject to survey, (indicate either (a) or preferably (b), if such information is available):

(a) Determined from the attached wastage allowance table and the original thickness to the hull structure plans of the ship;

(b) Given in the following table(s):