Z10.2
(cont'd)

TABLE VIII
Sheet 2

REQUIREMENTS FOR EXTENT OF THICKNESS MEASUREMENT AT THOSE AREAS OF SUBSTANTIAL CORROSION
SPECIAL SURVEY OF BULK CARRIERS WITHIN THE CARGO AREA

TRANSVERSE BULKHEADS IN CARGO HOLDS

STRUCTURAL MEMBER	EXTENT OF MEASUREMENT	PATTERN OF MEASUREMENT
1. Lower Stool	a. Transverse band within 25mm of welded connection to inner bottom	a. 5 point between stiffeners over 1 metre length
	b. Transverse band within 25 mm of welded connection to shelf plate	b. Ditto
2. Transverse Bulkhead	a. Transverse band at approximately mid height	a. 5 point pattern over 1 sq. metre of plating
	b. Transverse band at part of bulkhead adjacent to upper deck or below upper stool shelf plate (for those ships fitted with upper stools)	b. 5 point pattern over 1 sq. metre of plating

Z10.2
(cont'd)

TABLE VIII
Sheet 3

REQUIREMENTS FOR EXTENT OF THICKNESS MEASUREMENT AT THOSE AREAS OF SUBSTANTIAL CORROSION SPECIAL SURVEY OF BULK CARRIERS WITHIN THE CARGO AREA

DECK STRUCTURE INCLUDING CROSS STRIPS, MAIN CARGO HATCHWAYS, HATCH COVERS, COAMINGS AND TOPSIDE TANKS

STRUCTURAL MEMBER	EXTENT OF MEASUREMENT	PATTERN OF MEASUREMENT
1. Cross Deck Strip plating	Suspect cross deck strip plating	a. 5 point pattern between underdeck stiffeners over 1 metre length
2. Underdeck Stiffeners	a. Transverse members	a. 5 point pattern at each end and mid span
	b. Longitudinal member	b. 5 point pattern on both web and flange
3. Hatch Covers	a. Side and end skirts, each 3 locations	a. 5 point pattern at each location
	b. 3 longitudinal bands outboard strakes (2) and centreline strake (1)	b. 5 point measurement each band
4. Hatch Coamings	Each side and end coaming, one band lower 1/3, one band upper 2/3 of coaming	5 point measurement each band i.e. end or side coaming
5. Topside Water Ballast Tanks	a. Watertight transverse bulkheads	
	i. lower 1/3 of bulkhead	i. 5 point pattern over 1 sq. metre of plating
	ii. upper 2/3 of bulkhead	ii. 5 point pattern over 1 sq. metre of plating
	iii. stiffeners	iii 5 point pattern over 1 metre length
	b. 2 representative swash transverse bulkheads	
	i. lower 1/3 of bulkhead	i. 5 point pattern over 1 sq. metre of plating
	ii. upper 2/3 of bulkhead	ii. 5 point pattern over 1 sq. metre of plating
	iii. stiffeners	iii. 5 point pattern over 1 metre length
	c. 3 representative bays of slope plating	
	i. lower 1/3 of tank	i. 5 point pattern over 1 sq. metre of plating
	ii. upper 2/3 of tank	ii. 5 point pattern over 1 sq. metre of plating
	d. Longitudinals, suspect and adjacent	d. 5 point pattern both web and flange over 1 metre length
6. Main Deck Plating	Suspect plates and adjacent (4)	5 point pattern over 1 sq. metre of plating
7. Main Deck Longitudinals	Minimum of 3 longitudinals where plating measured	5 point pattern on both web and flange over 1 metre length
8. Web frames/Transverses	Suspect plates	5 point pattern over 1 sq. metre

Z10.2
(cont'd)

TABLE VIII
Sheet 4

REQUIREMENTS FOR EXTENT OF THICKNESS MEASUREMENT AT THOSE AREAS OF SUBSTANTIAL CORROSION
SPECIAL SURVEY OF BULK CARRIERS WITHIN THE CARGO AREA

DOUBLE BOTTOM AND HOPPER STRUCTURE

STRUCTURAL MEMBER	EXTENT OF MEASUREMENT	PATTERN OF MEASUREMENT
1. Inner/Double Bottom Plating	Suspect plate plus all adjacent plates	5 point pattern for each panel between longitudinals over 1 metre length
2. Inner/Double Bottom Longitudinals	Three longitudinals where plates measured	+3 measurements in line across web and 3 measurements on flange
3. Longitudinal Girders or Transverse floors	b. Suspect plates	b. 5 point pattern over about 1 sq. metre
4. Watertight Bulkheads (WT Floors)	a. lower 1/3 of tank	a. 5 point pattern over 1 sq. metre of plating
	b. upper 2/3 of tank	b. 5 point pattern alternate plates over 1 sq. metre of plating
5. Web Frames	Suspect plate	5 point pattern over 1 sq. metre of plating
6. Bottom/side shell longitudinals	Minimum of three longitudinals in way of suspect areas	3 measurements in line across web 3 measurements on flange

Z10.2
(cont'd)

TABLE VIII
Sheet 5

REQUIREMENTS FOR EXTENT OF THICKNESS MEASUREMENT AT THOSE AREAS OF SUBSTANTIAL CORROSION
SPECIAL SURVEY OF BULK CARRIERS WITHIN THE CARGO AREA

CARGO HOLDS

STRUCTURAL MEMBER	EXTENT OF MEASUREMENT	PATTERN OF MEASUREMENT
1. Side Shell frames	Suspect frame and each adjacent	a. At each end and mid span: 5 point pattern of both web and flange b. 5 point pattern within 25 mm of welded attachment to both shell and lower slope plate

End of
Main Section

Z10.2
(cont'd)

ANNEX I

GUIDELINES FOR TECHNICAL ASSESSMENT IN CONJUNCTION WITH PLANNING FOR ENHANCED SURVEYS OF BULK CARRIERS SPECIAL SURVEY - HULL

Contents:

1. INTRODUCTION

2. PURPOSE AND PRINCIPLES

2.1 Purpose

2.2 Minimum Requirements

2.3 Timing

2.4 Aspects to be Considered

3. TECHNICAL ASSESSMENT

3.1 General

3.2 Methods

3.2.1 Design Details

3.2.2 Corrosion

3.2.3 Locations for Close-up Survey and Thickness Measurement

REFERENCES

1.TSCF, "Guidance Manual for the Inspection and Condition Assessment of Tanker Structures, 1986."

2.TSCF, "Condition Evaluation and Maintenance of Tanker Structures, 1992."

3. IACS Recommendation 76, Guidelines for Surveys, Assessment and Repair of Hull Structures – Bulk Carriers, 2007.

1. INTRODUCTION

These guidelines contain information and suggestions concerning technical assessments which may be of use in conjunction with the planning of enhanced special surveys of bulk carriers. As indicated in section 5.1.5 of IACS Unified Requirement Z10.2, "Hull Surveys of Bulk Carriers,", the guidelines are a recommended tool which may be invoked at the discretion of an IACS Member Society, when considered necessary and appropriate, in conjunction with the preparation of the required Survey Programme.

Z10.2
(cont'd)

2. PURPOSE AND PRINCIPLES

2.1 Purpose

The purpose of the technical assessments described in these guidelines is to assist in identifying critical structural areas, nominating suspect areas and in focusing attention on structural elements or areas of structural elements which may be particularly susceptible to, or evidence a history of, wastage or damage. This information may be useful in nominating locations, areas, holds and tanks for thickness measurement, close-up survey and tank testing.

Critical Structural Areas are locations which have been identified from calculations to require monitoring or from the service of the subject ship or from similar or sister ships (if available) to be sensitive to cracking, buckling or corrosion which would impair the structural integrity of the ship.

2.2 Minimum Requirements

However, these guidelines may not be used to reduce the requirements pertaining to thickness measurement, close-up survey and tank testing contained in Tables I, II and paragraph 2.5, respectively, of Z10.2; which are, in all cases, to be complied with as a minimum.

2.3 Timing

As with other aspects of survey planning, the technical assessments described in these guidelines should be worked out by the Owner or operator in cooperation with the Classification Society well in advance of the commencement of the Special Survey, i.e., prior to commencing the survey and normally at least 12 to 15 months before the survey's completion due date.

2.4 Aspects to be Considered

Technical assessments, which may include quantitative or qualitative evaluation of relative risks of possible deterioration, of the following aspects of a particular ship may be used as a basis for the nomination of holds, tanks and areas for survey:

*Design features such as stress levels on various structural elements, design details and extent of use of high tensile steel.

*Former history with respect to corrosion, cracking, buckling, indents and repairs for the particular ship as well as similar vessels, where available.

*Information with respect to types of cargo carried, protection of tanks, and condition of coating, if any, of holds and tanks.

Technical assessments of the relative risks of susceptibility to damage or deterioration of various structural elements and areas are to be judged and decided on the basis of recognized principles and practices, such as may be found in the IACS publication "Bulk Carriers: Guidelines for Surveys, Assessment and Repair of Hull Structure," (Ref. 3).

3. TECHNICAL ASSESSMENT

3.1 General

There are three basic types of possible failure which may be the subject of technical assessment in connection with planning of surveys; corrosion, cracks and buckling. Contact damages are not normally covered by the survey plan since indents are usually noted in memoranda and assumed to be dealt with as a normal routine by Surveyors.

Z10.2
(cont'd)

Technical assessments performed in conjunction with the survey planning process are, in principle, to be as shown schematically in Figure 1 depicts, schematically, how technical assessments can be carried out in conjunction with the survey planning process.

The approach is basically an evaluation of the risk based on the knowledge and experience related to design and corrosion.

The design is to be considered with respect to structural details which may be susceptible to buckling or cracking as a result of vibration, high stress levels or fatigue.
Corrosion is related to the ageing process, and is closely connected with the quality of corrosion protection at newbuilding, and subsequent maintenance during the service life. Corrosion may also lead to cracking and/or buckling.

3.2 Methods

3.2.1 Design Details

Damage experience related to the ship in question and similar ships, where available, is the main source of information to be used in the process of planning. In addition, a selection of structural details from the design drawings is to be included.

Typical damage experience to be considered will consist of:

- Number, extent, location and frequency of cracks.

- Location of buckles.

This information may be found in the survey reports and/or the Owner's files, including the results of the Owner's own inspections. The defects are to be analyzed, noted and marked on sketches.

In addition, general experience is to be utilized. For example, Figure 2 shows typical locations in bulk carriers which experience has shown may be susceptible to structural damage. Also, reference is to be made to IACS's "Bulk Carriers: Guidelines for Survey, Assessment and Repair," (Ref. 3) which contains a catalogue of typical damages and proposed repair methods for various bulk carrier structural details.

Such figures are to be used together with a review of the main drawings, in order to compare with the actual structure and search for similar details which may be susceptible to damage. An example is shown in Figure 3.

The review of the main structural drawings, in addition to using the above mentioned figures, is to include checking for typical design details where cracking has been experienced. The factors contributing to damage are to be carefully considered.

The use of high tensile steel (HTS) is an important factor. Details showing good service experience where ordinary, mild steel has been used may be more susceptible to damage when HTS, and its higher associated stresses are utilized. There is extensive and, in general, good experience, with the use of HTS for longitudinal material in deck and bottom structures. Experience in other locations, where the dynamic stresses may be higher, is less favorable, e.g. side structures.

In this respect, stress calculations of typical and important components and details, in accordance with the latest Rules or other relevant methods, may prove useful and are to be considered.

Z10.2
(cont'd)

The selected areas of the structure identified during this process are to be recorded and marked on the structural drawings to be included in the Survey Programme.

3.2.2 Corrosion

In order to evaluate relative corrosion risks, the following information is generally to be considered:

- Usage of Tanks, Holds and Spaces
- Condition of Coatings
- Cleaning Procedures
- Previous Corrosion Damage
- Ballast use and time for Cargo Holds
- Risk of Corrosion in Cargo Holds and Ballast Tanks
- Location of Ballast Tanks Adjacent to Heated Fuel Oil Tanks

Ref. 2 gives definitive examples which can be used for judging and describing coating condition, using typical pictures of conditions.
For bulk carriers, Ref. 3 is to be used as the basis for the evaluation, together with relevant information on the anticipated condition of the ship as derived from the information collected in order to prepare the Survey Programme and the age of the ship.

The various tanks, holds and spaces are to be listed with the corrosion risks nominated accordingly.

3.2.3 Locations for Close-up Survey and Thickness Measurement

On the basis of the table of corrosion risks and the evaluation of design experience, the locations for initial close-up survey and thickness measurement (sections) may be nominated.

The sections subject to thickness measurement are to normally be nominated in tanks, holds and spaces where corrosion risk is judged to be the highest.

The nomination of tanks, holds and spaces for close-up survey is to, initially, be based on highest corrosion risk, and is to always include ballast tanks. The principle for the selection should be that the extent is increased by age or where information is insufficient or unreliable.

Z10.2
(cont'd)

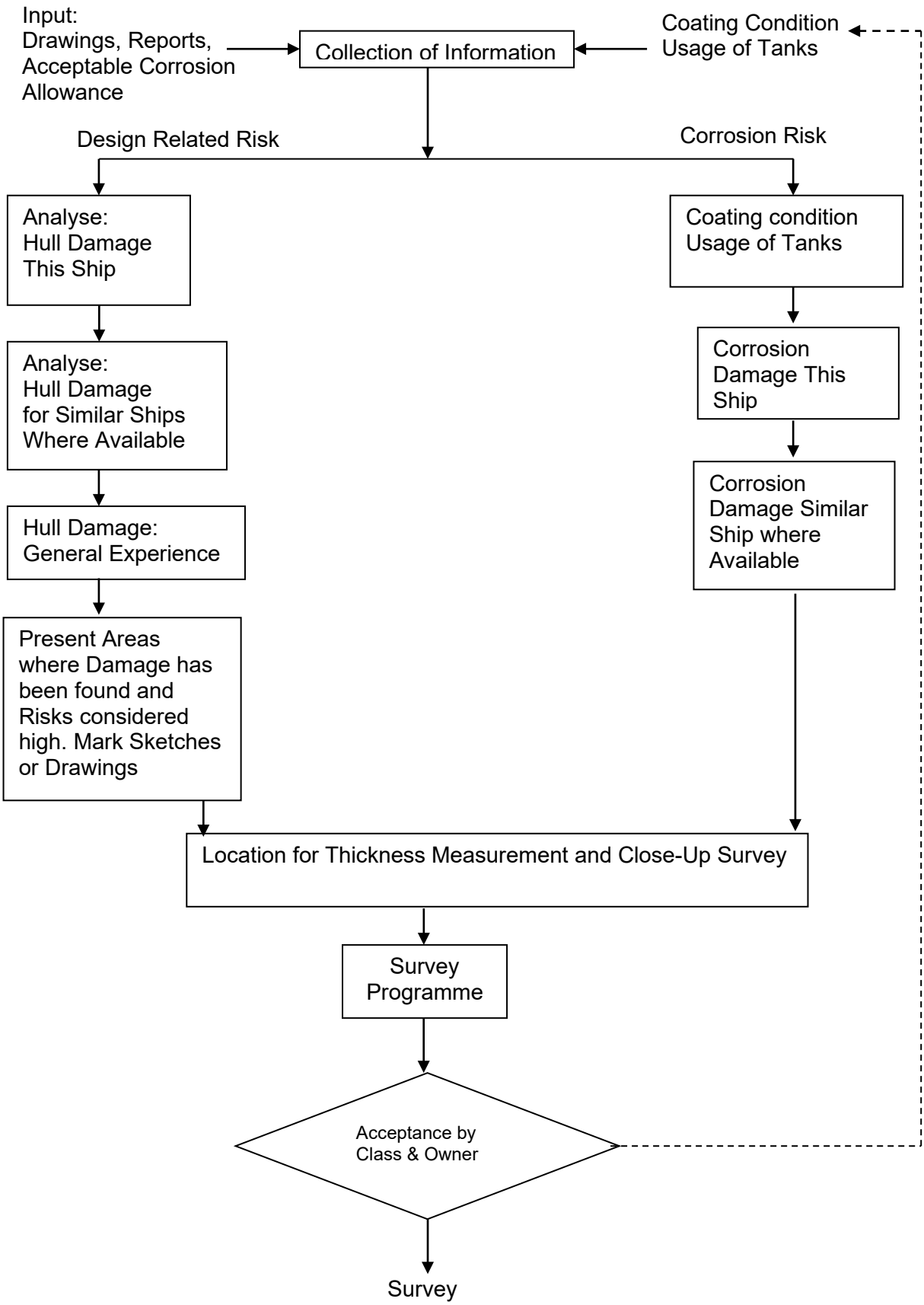

Figure 1: Technical Assessment & the Survey Planning Process

Z10.2
(cont'd)

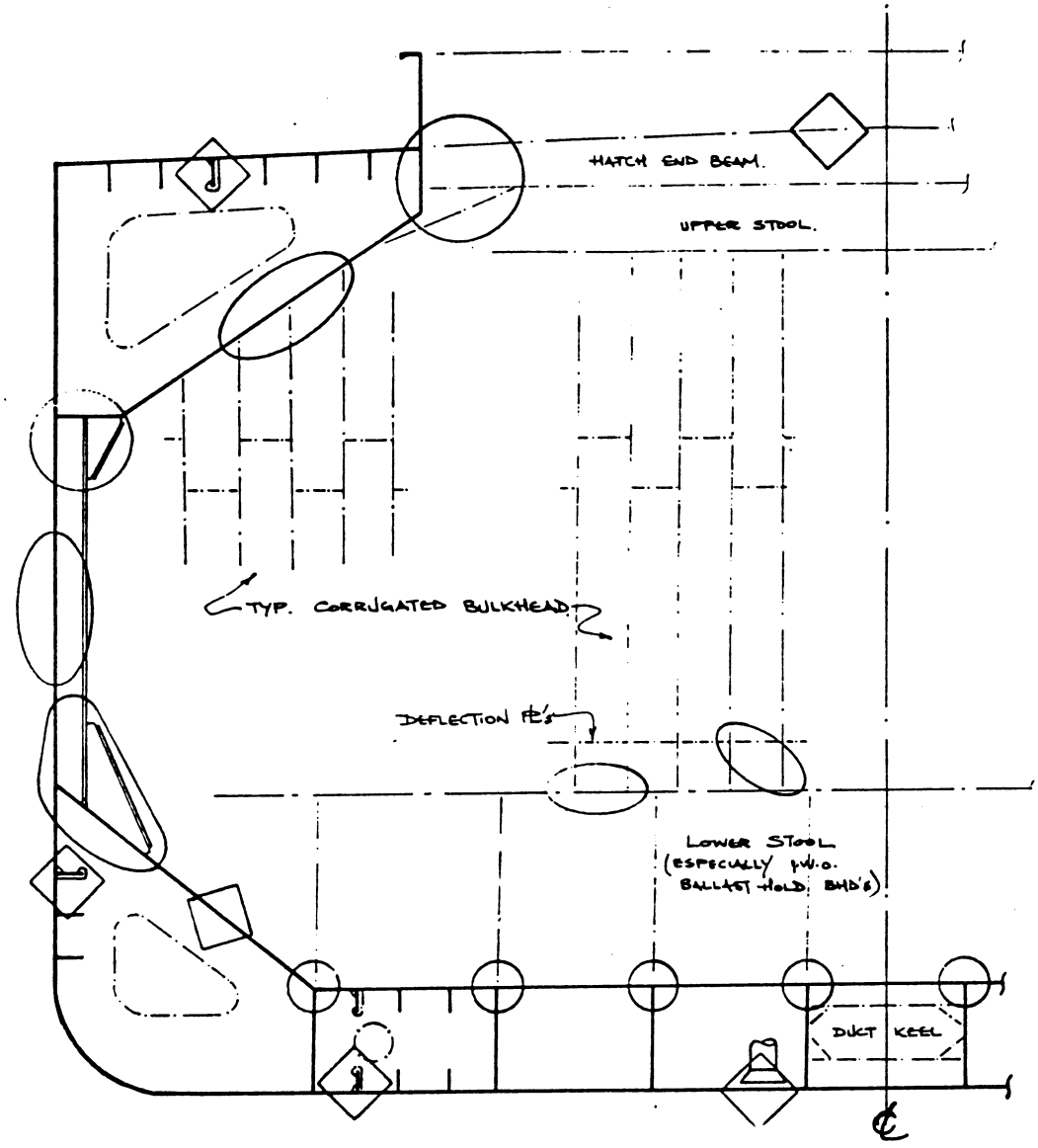

Figure 2: Typical Locations Susceptible to Structural Damage or Corrosion

Z10.2
(cont'd)

AREA 1	Structural item	Side shell frames and end brackets (separate bracket configuration)	EXAMPLE 1
Detail of damage		Fractures in brackets at termination of frame	

Sketch of damage

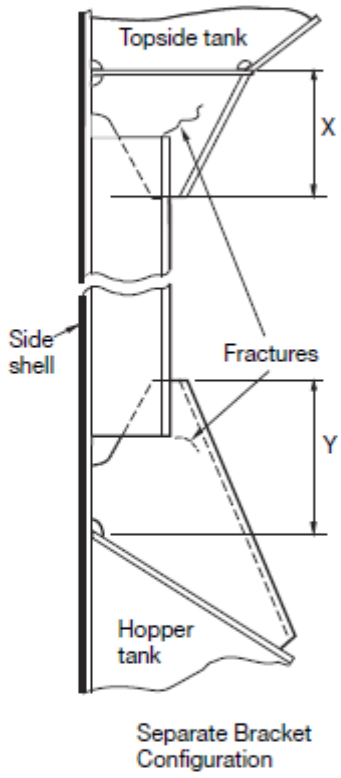

Sketch of repair

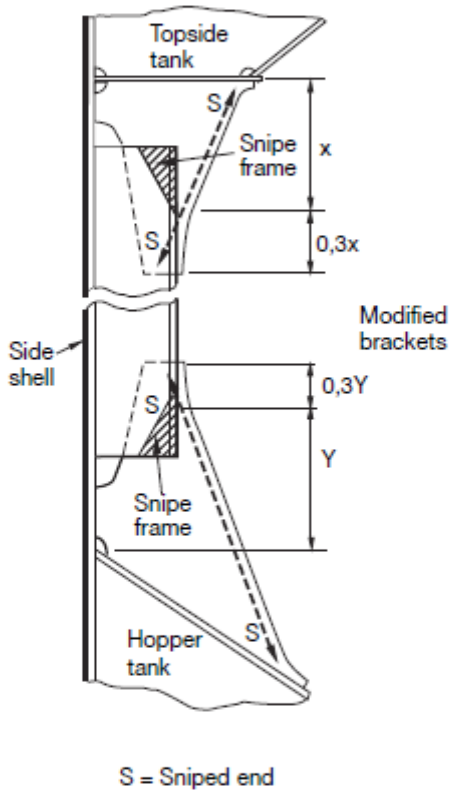

Notes on possible cause of damage

1. This type of damage is due to stress concentration.

Notes on repairs

1. For small fractures e.g. hairline fractures, the fracture can be 'veed' out, welded up, ground and examined by NDT for fractures.
2. For larger/significant fractures consideration is to be given to cropping and partly renewing/renewing the frame brackets. If renewing the brackets, ends of frames can be sniped to soften them.
3. If felt prudent, soft toes are to be incorporated at the boundaries of the bracket to the wing tanks.
4. Attention to be given to the structure in wing tanks in way of the extended bracket arm i.e. reinforcement provided in line with the bracket arm.

Figure 3: Typical Damage and Repair Example (Reproduced from Ref: 3)

End of Annex I

Z10.2
(cont'd)

Sheet 1

ANNEX II

IACS RECOMMENDED PROCEDURES FOR THICKNESS MEASUREMENTS OF BULK CARRIERS*

*

Note: Annex II is recomendatory.

Z10.2
(cont'd)

1. This document is to be used for recording thickness measurements as required by the IACS Unified Requirement Z10.2.

2. Reporting forms TM1-BC, TM2-BC, TM3-BC, TM4-BC, TM5-BC, TM6-BC and TM7-BC (sheets 4-11) are to be used for recording thickness measurements and the maximum allowable diminution is to be stated.
The maximum allowable diminution could be stated in an attached document.

3. The remaining sheets 12-14 are guidance diagrams and notes relating to the reporting forms and the IACS Unified Requirements for thickness measurement.

4. The reporting forms shall where appropriate, be supplemented by data presented on structural sketches.

Z10.2
(cont'd)

Sheet 2

CONTENTS

Sheet 1	-	Front cover
Sheet 2	-	Contents
Sheet 3	-	General particulars

REPORTS

Sheet 4	-	Report TM1-BC for recording the thickness measurement of all deck plating, all bottom shell plating and side shell plating.
Sheet 5	-	Report TM2-BC (i) for recording the thickness measurement of shell and deck plating at transverse sections - strength deck and sheerstrake plating.
Sheet 6	-	Report TM2-BC (ii) for recording the thickness measurement of shell and deck plating at transverse sections - shell plating.
Sheet 7	-	Report TM3-BC for recording the thickness measurement of longitudinal members at transverse sections.
Sheet 8	-	Report TM4-BC for recording the thickness measurement of transverse structural members.
Sheet 9	-	Report TM5-BC for recording the thickness measurement of cargo hold transverse bulkheads.
Sheet 10	-	Report TM6-BC for recording the thickness measurement of miscellaneous structural members.
Sheet 11	-	Report TM7-BC for recording the thickness measurement of cargo hold transverse frames.
Sheet 11 bis	-	Report TM7-BC S31 for recording thickness measurement of cargo hold side shell frames under UR S31.

GUIDANCE

Sheet 12	-	Bulk Carrier typical transverse section. The diagram includes details of the items to be measured and the report forms to be used.
Sheet 13	-	Transverse section outline. This diagram may be used for those ships where the diagram on sheet 12 is not suitable.
Sheet 14	-	Sketches of bulk carrier showing typical areas for thickness measurement of cargo hold frames, structural members and transverse bulkheads in association with close-up survey requirements.

Z10.2
(cont'd)

Sheet 3

GENERAL PARTICULARS

Ship's name:-

IMO number:-

Class identity number:-

Port of registry:-

Gross tons:-

Deadweight:-

Date of build:-

Classification Society:-

Name of Firm performing thickness measurement:-

Thickness measurement firm certified by:-

Certificate No:-

Certificate valid from.....to.....

Place of measurement:-

First date of measurement:-

Last date of measurement:-

Special survey/intermediate survey due:-*

Details of measurement equipment:-

Qualification of operators:-

Report Number:- consisting of Sheets

Names of operator:-..... Name of surveyor:-.....

Signature of operator:-..... Signature of surveyor:-.....

Firm official stamp:- Classification Society Official Stamp:-

* Delete as appropriate

Z10.2 (cont'd)

TM1-BC

Report on THICKNESS MEASUREMENT of ALL DECK PLATING, ALL BOTTOM SHELL PLATING or SIDE SHELL PLATING* (* - delete as appropriate)

Sheet 4

Ship's name..... Class Identity No. ..... Report No. .....

STRAKE POSITION																	
PLATE POSITION	No. or Letter	Org. Thk. mm	Forward Reading						Aft Reading						Mean Diminution %		Maximum Allowable Diminution
			Gauged		Diminution P		Diminution S		Gauged		Diminution P		Diminution S				
			P	S	mm	%	mm	%	P	S	mm	%	mm	%	P	S	mm
12th forward																	
11th																	
10th																	
9th																	
8th																	
7th																	
6th																	
5th																	
4th																	
3rd																	
2nd																	
1st																	
Amidships																	
1st aft																	
2nd																	
3rd																	
4th																	
5th																	
6th																	
7th																	
8th																	
9th																	
10th																	
11th																	
12th																	

Operators Signature..... NOTES – See Reverse

Z10.2
(cont'd)

NOTES

1. This report is to be used for recording the thickness measurement of:-

   A - All strength deck plating within cargo length area.

   B - Keel, bottom shell plating and bilge plating within the cargo length area.

   C - Side shell plating that is all wind and water strakes within the cargo length area.

   D - Side shell plating that is selected wind and water strakes outside the cargo length area.

2. The strake position is to be cleared indicates as follows:-

   2.1 For strength deck indicate the number of the strake of plating inboard from the stringer plate.

   2.2 For bottom plating indicate the number of the strake of plating outboard from the keel plate.

   2.3 For side shell plating give number of the strake of plating sheerstrake and letter as shown on shell expansion.

3. Only the deck plating strakes outside line of openings are to be recorded.

4. Measurements are to be taken at the forward and aft areas of all plates and the single measurements recorded are to represent the average of multiple measurements.

5. The maximum allowable diminution could be stated in an attached document.

Z10.2 (cont'd) **TM2-BC (I)**

Report on THICKNESS MEASUREMENT OF SHELL AND DECK PLATING (one, two or three transverse sections)

Sheet 5

Ship's name..... Class Identity No. ..... Report No. .....

STRENGTH DECK AND SHEERSTRAKE PLATING

STRAKE POSITION	FIRST TRANSVERSE SECTION AT FRAME NUMBER									SECOND TRANSVERSE SECTION AT FRAME NUMBER									THIRD TRANSVERSE SECTION AT FRAME NUMBER								
	No. or Letter	Org. Thk.	Max. Alwb. Dim.	Gauged		Diminution P		Diminution S		No. or Letter	Org. Thk.	Max. Alwb. Dim.	Gauged		Diminution P		Diminution S		No. or Letter	Org. Thk.	Max. Alwb. Dim.	Gauged		Diminution P		Diminution S	
		mm	mm	P	S	mm	%	mm	%		mm	mm	P	S	mm	%	mm	%		mm	mm	P	S	mm	%	mm	%
Stringer Plate																											
1st strake inboard																											
2nd																											
3rd																											
4th																											
5th																											
6th																											
7th																											
8th																											
9th																											
10th																											
11th																											
12th																											
13th																											
14th																											
centre strake																											
sheer strake																											
TOPSIDE TOTAL																											

Operators Signature..... NOTES – See Reverse

Z10.2
(cont'd)

NOTES

1. This report is to be used for recording the thickness measurement of:-

   Strength deck plating and sheerstrake plating transverse sections:-

   Two or three section within the cargo length area, comprising of the structural items (1), (2) and (3) as shown on the diagram of typical transverse section.

2. Only the deck plating strakes outside the line of openings are to be recorded.

3. The topside area comprises deck plating, stringer plate and sheerstrake (including rounded gunwales).

4. The exact frame station of measurement is to be stated.

5. The single measurements recorded are to represent the average of multiple measurements.

6. The maximum allowable diminution could be stated in an attached document.

Z10.2 TM2-BC (II) (cont'd)

Report on THICKNESS MEASUREMENT OF SHELL AND DECK PLATING (one, two or three transverse sections)

Sheet 6

Ship's name..... Class Identity No. ..... Report No. .....

SHELL PLATING																												
	FIRST TRANSVERSE SECTION AT FRAME NUMBER									SECOND TRANSVERSE SECTION AT FRAME NUMBER									THIRD TRANSVERSE SECTION AT FRAME NUMBER								
STRAKE POSITION	No. or Letter	Org. Thk.	Max. Alwb. Dim.	Gauged		Diminution P		Diminution S		No. or Letter	Org. Thk.	Max. Alwb. Dim.	Gauged		Diminution P		Diminution S		No. or Letter	Org. Thk.	Max. Alwb. Dim.	Gauged		Diminution P		Diminution S	
		mm	mm	P	S	mm	%	mm	%		mm	mm	P	S	mm	%	mm	%		mm	mm	P	S	mm	%	mm	%
1st below sheer strake																												
2nd																												
3rd																												
4th																												
5th																												
6th																												
7th																												
8th																												
9th																												
10th																												
11th																												
12th																												
13th																												
14th																												
15th																												
16th																												
17th																												
18th																												
19th																												
20th																												
keel strake																												
BOTTOM TOTAL																												

Operators Signature..... NOTES – See Reverse