Z10.2
(cont'd)

NOTES

1. This report is to be used for recording the thickness measurement of:-

   Shell plating transverse sections:-

   Two or three sections within cargo length area comprising of the structural items (4), (5), (6) and (7) as shown on the diagram of typical transverse section.

2. The bottom area comprises keel, bottom and bilge plating.

3. The exact frame station of measurement is to be stated.

4. The single measurements recorded are to represent the average of multiple measurements.

5. The maximum allowable diminution could be stated in an attached document.

Z10.2 TM3-BC (cont'd)

Report on THICKNESS MEASUREMENT OF LONGITUDINAL MEMBERS (one, two or three transverse sections)

Sheet 7

Ship's name..... Class Identity No. ..... Report No. .....

	FIRST TRANSVERSE SECTION AT FRAME NUMBER									SECOND TRANSVERSE SECTION AT FRAME NUMBER									THIRD TRANSVERSE SECTION AT FRAME NUMBER								
STRUCTURAL MEMBER	Item No.	Org. Thk.	Max. Alwb. Dim.	Gauged		Diminution P		Diminution S		Item No.	Org. Thk.	Max. Alwb. Dim.	Gauged		Diminution P		Diminution S		Item No.	Org. Thk.	Max. Alwb. Dim.	Gauged		Diminution P		Diminution S	
		mm	mm	P	S	mm	%	mm	%		mm	mm	P	S	mm	%	mm	%		mm	mm	P	S	mm	%	mm	%

Operators Signature..... NOTES – See Reverse

Z10.2
(cont'd)

NOTES

1. This report is to be used for recording the thickness measurement of:-

   Longitudinal Members at transverse sections:-

   Two, or three sections within the cargo length area, comprising of the appropriate structural items (8) to (20) as shown on diagram of typical transverse section.

2. The exact frame station of measurement is to be stated.

3. The single measurements recorded are to represent the average of multiple measurements.

4. The maximum allowable diminution could be stated in an attached document.

Z10.2 TM4-BC (cont'd)

Report on THICKNESS MEASUREMENT OF TRANSVERSE STRUCTURAL MEMBERS
In the double bottom, hopper side and topside water ballast tanks

Sheet 8

Ship's name..... Class Identity No. ..... Report No. .....

TANK DESCRIPTION:

LOCATION OF STRUCTURE:

STRUCTURAL MEMBER	ITEM	Original Thickness mm	Max. Alwb. Dim. mm	Gauged		Diminution P		Diminution S	
				P	S	mm	%	mm	%

Operators Signature..... NOTES – See Reverse

Z10.2
(cont'd)

NOTES

1. This report is to be used for recording the thickness measurement of transverse structural members, comprising of the appropriate structural items (23) to (25) as shown on diagram of typical transverse section, sheet 12 of this document.

2. Guidance for areas if measurement is indicated on the diagrams shown on sheet 14 of this document.

3. The single measurements recorded are to represent the average of multiple measurements.

4. The maximum allowable diminution could be stated in an attached document.

Z10.2 (cont'd) **TM5-BC** **Report on THICKNESS OF CARGO HOLD TRANSVERSE BULKHEADS** **Sheet 9**

Ship's name..... Class Identity No. ..... Report No. .....

LOCATION OF STRUCTURE: FRAME NO.:

STRUCTURAL COMPONENT (PLATING/STIFFENER)

	Original Thickness mm	Max. Alwb. Dim. mm	Gauged		Diminution P		Diminution S	
			Port	Starboard	mm	%	mm	%

Operators Signature..... NOTES – See Reverse

Z10.2
(cont'd)

NOTES

1. This report form is to be used for recording the thickness measurement of cargo hold transverse bulkheads.

2. Guidance for areas of measurement is indicated on the diagrams shown on sheet 14 of this document.

3. The single measurements recorded are to represent the average of multiple measurements.

4. The maximum allowable diminution could be stated in an attached document.

Z10.2 (cont'd) **TM6-BC** **Report on THICKNESS MEASUREMENT OF MISCELLANEOUS STRUCTURAL MEMBERS** **Sheet 10**

Ship's name..... Class Identity No. ..... Report No. .....

STRUCTURAL MEMBER:									SKETCH
LOCATION OF STRUCTURE:									
Description	Org. Thk. mm	Max. Alwb. Dim. mm	Gauged		Diminution P		Diminution S		
			P	S	mm	%	mm	%	

Operators Signature..... NOTES – See Reverse

Z10.2
(cont'd)

NOTES

1. This report is to be used for recording the thickness measurement of miscellaneous structural members including the structural items (28), (29) and (30) as shown on diagram of typical transverse section, sheet 12 of this document.

2. Guidance for areas of measurement is indicated on sheet 14 of this document.

3. The single measurements recorded are to represent the average of multiple measurements.

4. The maximum allowable diminution could be stated in an attached document.

Z10.2 TM7-BC

Report on THICKNESS MEASUREMENT OF CARGO HOLD TRANSVERSE FRAMES

Sheet 11

(cont'd)

Ship's name..... Class Identity No. ..... Report No. .....

CARGO HOLD NO.																								
	UPPER PART								MID PART								LOWER PART							
FRAME NUMBER	Org. Thk.	Max. Alwb. Dim.	Gauged		Diminution P		Diminution S		Org. Thk.	Max. Alwb. Dim.	Gauged		Diminution P		Diminution S		Org. Thk.	Max. Alwb. Dim.	Gauged		Diminution P		Diminution S	
	mm	mm	P	S	mm	%	mm	%	mm	mm	P	S	mm	%	mm	%	mm	mm	P	S	mm	%	mm	%

Operators Signature.....

NOTES – See Reverse

Z10.2
(cont'd)

NOTES

1. This report is to be used for recording the thickness measurement of:-

   Cargo Hold Transverse Frames

   Structural item number 34 as shown on the diagram of typical transverse section, sheet 12 of this document.

2. Guidance for areas of measurement is indicated on the diagrams shown on sheet 14 of this document.
   The single measurements recorded are to represent the average of multiple measurements.

3. The location and pattern of measurements is to be indicated on the sketches of hold frames shown below.

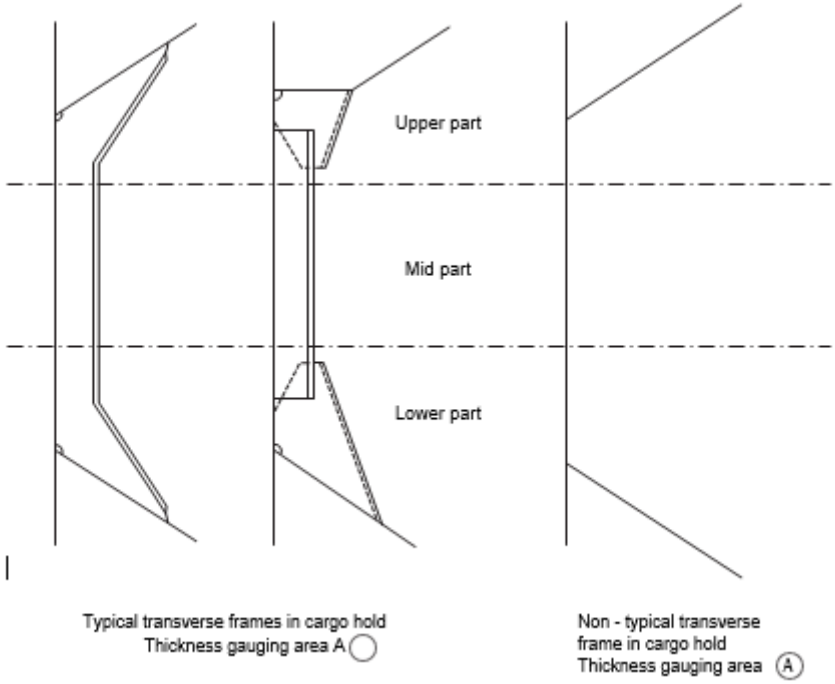

4. The maximum allowable diminution could be stated in an attached document.

Z10.2
(cont'd)

TM7-BC S31 Report on THICKNESS MEASUREMENT OF CARGO HOLD SIDE SHELL FRAMES

Sheet 11 bis

Ship's name..... Class Identity No. ..... Report No. .....

CARGO HOLD NO.: Side: (Port / stb.)

	ZONE A						ZONE B						ZONE C						ZONE D					
FRAME NO	Org. Thk.	t_{REN}	t_{COAT}	t_M	Diminution		Org. Thk.	t_{REN}	t_{COAT}	t_M	Diminution		Org. Thk.	t_{REN}	t_{COAT}	t_M	Diminution		Org. Thk.	t_{REN}	t_{COAT}	t_M	Diminution	
	mm	mm	mm	mm	mm	%	mm	mm	mm	mm	mm	%	mm	mm	mm	mm	mm	%	mm	mm	mm	mm	mm	%

Operators Signature..... NOTES – See Reverse

Z10.2
(cont'd)

NOTES

1. This report is to be used for recording the thickness measurement of:-

   Cargo Hold Transverse Frames for application of UR S31

2. Guidance for areas of measurement is provided in Annex V.

3. The maximum allowable diminution could be stated in an attached document.

Z10.2
(cont'd)

Sheet 12

THICKNESS MEASUREMENT - BULK CARRIERS

Typical transverse section indicating longitudinal and transverse members

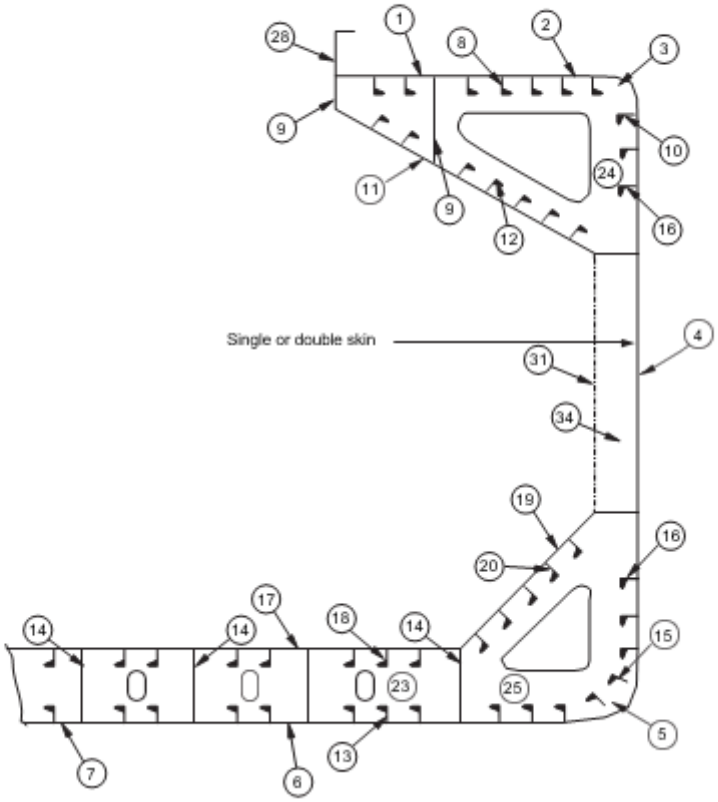

Report on TM2	
1	Strength deck plating
2	Stringer plate
3	Sheerstrake
4	Side shell plating
5	Bilge plating
6	Bottom shell plating
7	Keel plate

Report on TM3-BC			
8	Deck longitudinals	16	Side shell longitudinals
9	Deck girders	17	Inner bottom plating
10	Sheerstrake longitudinals	18	Inner botom longitudinals
11	Topside tank sloping plating	19	Hopper side plating
12	Topside tank sloping plating longitudinals	20	Hopper side longitudinals
13	Bottom longitudinals	21	
14	Bottom girders	22	
15	Bilge Longitudinals		

Report on TM4	
23	Double bottom tank floors
24	Topside tank transverses
25	Hopper side tank transverses
26	
27	

Report on TM6-BC	
28	Hatch coamings
29	Deck plating between hatches
30	Hatch covers
31	Inner bulkhead plating
32	
33	

Report on TM7-BC	
34	Hold frames or diaphragms

Z10.2
(cont'd)

Sheet 13

THICKNESS MEASUREMENT - BULK CARRIERS

Bulk Carriers : Typical transverse section outline

To be used for longitudinal and transverse members
where the typical Bulk Carrier section is not applicable

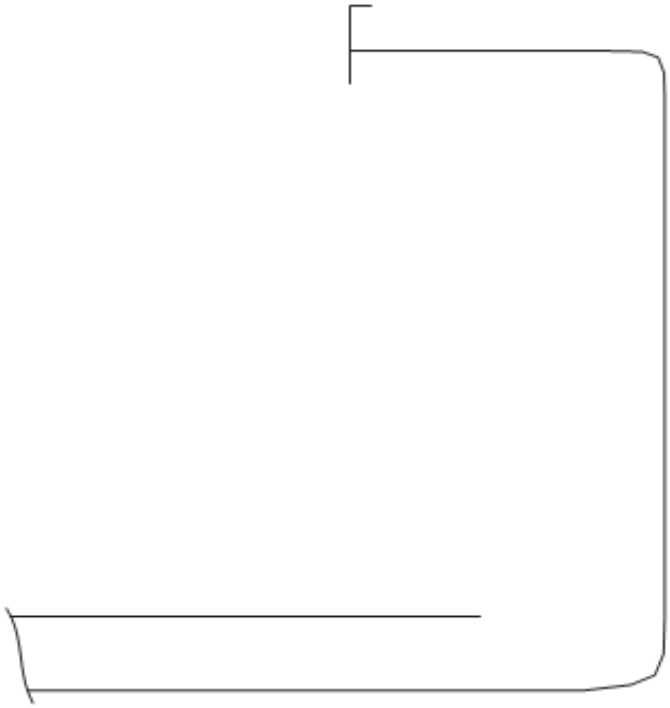

Report on TM2	
1	Strength deck plating
2	Stringer plate
3	Sheerstrake
4	Side shell plating
5	Bilge plating
6	Bottom shell plating
7	Keel plate

Report on TM3-BC			
8	Deck longitudinals	16	Side shell longitudinals
9	Deck girders	17	Inner bottom plating
10	Sheerstrake longitudinals	18	Inner botom longitudinals
11	Topside tank sloping plating	19	Hopper side plating
12	Topside tank sloping plating longitudinals	20	Hopper side longitudinals
13	Bottom longitudinals	21	
14	Bottom girders	22	
15	Bilge Longitudinals		

Report on TM4	
23	Double bottom tank floors
24	Topside tank transverses
25	Hopper side tank transverses
26	
27	

Report on TM6-BC	
28	Hatch coamings
29	Deck plating between hatches
30	Hatch covers
31	Inner bulkhead plating
32	
33	

Report on TM7-BC	
34	Hold frames or diaphragms

Z10.2
(cont'd)

Sheet 14

Close-up Survey and Thickness Measurement Areas

Typical transverse section

Areas (A), (B) and (D)

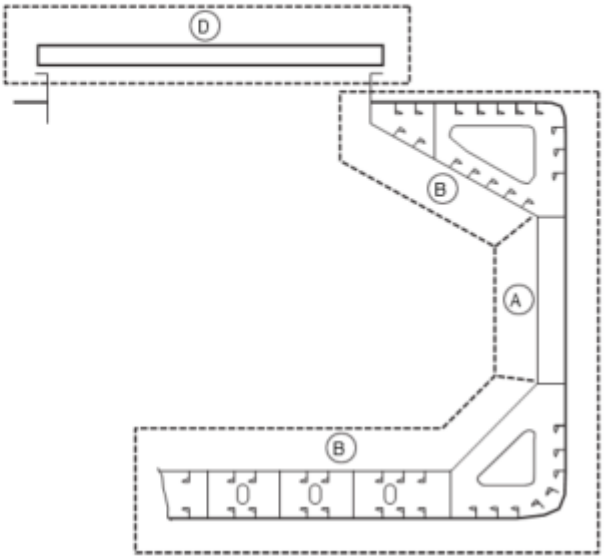

Thickness to be reported on TM3-BC, TM4-BC, TM6-BC and TM7-BC as appropriate

A cargo hold, transverse bulkhead

Area (C)

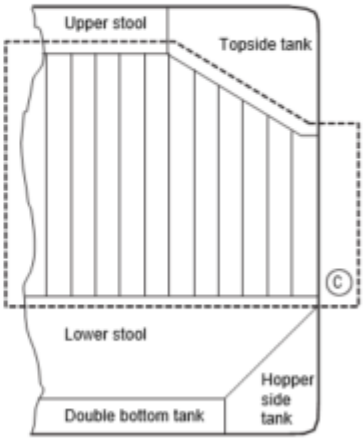

Thickness to be reported on TM5-BC

Typical areas of deck plating inside line of hatch openings between cargo hold hatches

Area (E)

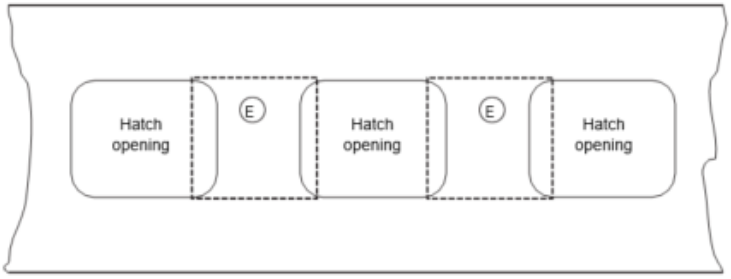

Thickness to be reported on TM6-BC

Z10.2
(cont'd)

Sheet 1

ANNEX II (CSR)

IACS RECOMMENDED PROCEDURES FOR THICKNESS MEASUREMENTS OF BULK CARRIERS BUILT UNDER IACS COMMON STRUCTURAL RULES*

*

Note: Annex II (CSR) is recomendatory.

Z10.2 (cont'd)

1. This document is to be used for recording thickness measurements of bulk carriers built under IACS Common Structural Rules as required by the IACS Unified Requirement Z10.2.

2. Reporting forms TM1-BC(CSR), TM2-BC(CSR) (i) and (ii), TM3-BC(CSR), TM4-BC(CSR), TM5-BC(CSR), TM6-BC(CSR) and TM7-BC(CSR) (sheets 4-11) are to be used for recording thickness measurements. The as-built thickness and the voluntary thickness addition and renewal thickness (minimum allowable thickness) are to be stated in the said forms.

3. The remaining sheets 12-14 are guidance diagrams and notes relating to the reporting forms and the IACS Unified Requirements for thickness measurement.

Z10.2
(cont'd)

Sheet 2

CONTENTS

Sheet 1	-	Front cover
Sheet 2	-	Contents
Sheet 3	-	General particulars

REPORTS

Sheet 4	-	Report TM1-BC(CSR) for recording the thickness measurement of all deck plating, all bottom plating and side shell plating.
Sheet 5	-	Report TM2-BC(CSR) (i) for recording the thickness measurement of shell and deck plating at transverse sections - strength deck and sheerstrake plating.
Sheet 6	-	Report TM2-BC(CSR) (ii) for recording the thickness measurement of shell plating at transverse sections.
Sheet 7	-	Report TM3-BC(CSR) for recording the thickness measurement of longitudinal members at transverse sections.
Sheet 8	-	Report TM4-BC(CSR) for recording the thickness measurement of transverse structural members.
Sheet 9	-	Report TM5-BC(CSR) for recording the thickness measurement of cargo hold transverse bulkheads.
Sheet 10	-	Report TM6-BC(CSR) for recording the thickness measurement of miscellaneous structural members.
Sheet 11	-	Report TM7-BC(CSR) for recording the thickness measurement of cargo hold transverse frames.

GUIDANCE

Sheet 12	-	Bulk Carrier typical transverse section. The diagram includes details of the items to be measured and the report forms to be used.
Sheet 13	-	Transverse section outline. This diagram may be used for those ships where the diagram on sheet 12 is not suitable.
Sheet 14	-	Sketches of bulk carrier showing typical areas for thickness measurement of cargo hold frames, structural members and transverse bulkheads in association with close-up survey requirements.

Z10.2
(cont'd)

Sheet 3

GENERAL PARTICULARS

Ships name:-

IMO number:-

Class identity number:-

Port of registry:-

Gross tons:-

Deadweight:-

Date of build:-

Classification Society:-

Name of Firm performing thickness measurement:-

Thickness measurement firm certified by:-

Certificate No:-

Certificate valid from.....to.....

Place of measurement:-

First date of measurement:-

Last date of measurement:-

Special survey/intermediate survey due:-*

Details of measurement equipment:-

Qualification of operators:-

Report Number:- consisting of Sheets

Names of operator:-..... Name of surveyor:-.....

Signature of operator:-..... Signature of surveyor:-.....

Firm official stamp:- Classification Society Official Stamp:-

* Delete as appropriate