Z10.5 (cont)

3.2.4 Examination of Cargo Holds.

3.2.4.1 Double Skin Bulk Carriers 10-15 years of age. The following is to apply:

a) Overall survey of two selected cargo holds.

b) When considered necessary by the Surveyor, or where extensive corrosion exists, thickness measurement is to be carried out. If the results of these thickness measurements indicate that Substantial Corrosion is found, the extent of thickness measurements is to be increased in accordance with Table IV. These extended thickness measurements are to be carried out before the annual survey is credited as complete. Suspect Areas identified at previous surveys are to be examined.
Areas of substantial corrosion identified at previous surveys are to have thickness measurements taken.

For vessels built under the IACS Common Structural Rules, the annual thickness gauging may be omitted where a protective coating has been applied in accordance with the coating manufacturer's requirements and is maintained in good condition.

c) All piping and penetrations in cargo holds, including overboard piping, are to be examined.

3.2.4.2 Double Skin Bulk Carriers over 15 years of age. The following is to apply:

a) Overall survey of all cargo holds.

b) When considered necessary by the Surveyor, or where extensive corrosion exists, thickness measurement is to be carried out. If the results of these thickness measurements indicate that Substantial Corrosion is found, the extent of thickness measurements is to be increased in accordance with Table IV. These extended thickness measurements are to be carried out before the annual survey is credited as complete. Suspect Areas identified at previous surveys are to be examined.
Areas of substantial corrosion identified at previous surveys are to have thickness measurements taken.

For vessels built under the IACS Common Structural Rules, the annual thickness gauging may be omitted where a protective coating has been applied in accordance with the coating manufacturer's requirements and is maintained in good condition.

c) All piping and penetrations in cargo holds, including overboard piping, are to be examined.

3.2.5 Examination of Ballast Tanks

3.2.5.1 Examination of Ballast Tanks when required as a consequence of the results of the Special Survey and Intermediate Survey is to be carried out. When considered necessary by the surveyor, or where extensive corrosion exists, thickness measurements are to be carried out. If the results of these thickness measurements indicate that Substantial Corrosion is found, the extent of thickness measurements is to be increased in accordance with Table IV. These extended thickness measurements are to be carried out before the survey is credited as complete.
Suspect Areas identified at previous surveys are to be examined. Areas of substantial corrosion identified at previous survey~~s~~ are to have thickness measurements taken.

Z10.5 (cont)

For vessels built under the IACS Common Structural Rules, the annual thickness gauging may be omitted where a protective coating has been applied in accordance with the coating manufacturer’s requirements and is maintained in good condition.

3.3 Additional annual survey requirements after determining compliance with SOLAS XII/12 and XII/13

3.3.1 For ships complying with the requirements of SOLAS XII/12 for hold, ballast and dry space water level detectors, the annual survey is to include an examination and a test, at random, of the water ingress detection systems and of their alarms.

3.3.2 For ships complying with the requirements of SOLAS XII/13 for the availability of pumping systems, the annual survey is to include an examination and a test, of the means for draining and pumping ballast tanks forward of the collision bulkhead and bilges of dry spaces any part of which extends forward of the foremost cargo hold, and of their controls.

3.4 Examination of double-side skin void spaces for bulk carriers exceeding 20 years of age and of 150 m in length and upwards

Examination of double-side skin void spaces, for bulk carriers exceeding 20 years of age and of 150 m in length and upwards, are to be carried out when required as a consequence of the results of the renewal survey (as required by para 2.2.3.3) and intermediate survey (as required by 4.2.4.1). When considered necessary by the Administration, or when extensive corrosion exists, thickness measurements should be carried out. If the results of these thickness measurements indicate that substantial corrosion is found, the extent of thickness measurements should be increased in accordance with table IV. These extended thickness measurements should be carried out before the survey is credited as completed. Suspect areas identified at previous surveys should be examined. Areas of substantial corrosion identified at previous surveys should have thickness measurements taken.
For bulk carriers built under the IACS Common Structural Rules, the annual thickness gauging may be omitted where a protective coating has been applied in accordance with the coating manufacturer's requirements and is maintained in good condition.

Z10.5 (cont)

4. INTERMEDIATE SURVEY

4.1 Schedule

4.1.1 The Intermediate Survey is to be held at or between either the 2nd or 3rd Annual Survey.

4.1.2 Those items, which are additional to the requirements of the Annual Survey, may be surveyed either at or between the 2nd and 3rd Annual Survey.

4.1.3 Concurrent crediting to both Intermediate Survey (IS) and Special Survey (SS) for surveys and thickness measurements of spaces are not acceptable.

4.2 Scope

4.2.1 General

4.2.1.1 The survey extent is dependent on the age of the vessel as specified in 4.2.2 to 4.2.4 and shown in Table V.

4.2.2 Double Skin Bulk Carriers 5 - 10 years of age. The following is to apply:

4.2.2.1 Ballast Tanks

a) For tanks used for water ballast, an overall survey of representative tanks selected by the Surveyor is to be carried out. The selection is to include fore and aft peak tanks and a number of other tanks, taking into account the total number and type of ballast tanks. If such overall survey reveals no visible structural defects, the examination may be limited to verification that the corrosion prevention system remains efficient.

b) Where a hard coating is found to be in less than GOOD condition, corrosion or other defects are found in water Ballast tanks or where a hard Protective Coating was not applied from the time of construction, the examination is to be extended to other Ballast tanks of the same type.

c) In ballast tanks other than double bottom tanks, where a hard Protective Coating is found to be in less than GOOD condition, and it is not renewed, or where soft or semi-hard coating has been applied, or where a hard protective coating was not applied from the time of construction, the tanks in question are to be examined and thickness measurements carried out as considered necessary at annual intervals. When such breakdown of hard protective coating is found in ballast double bottom tanks, or where a soft or semi-hard coating has been applied, or where a hard protective coating has not been applied, the tanks in question may be examined at annual intervals. When considered necessary by the Surveyor, or where extensive corrosion exists, thickness measurements are to be carried out.

d) In addition to the requirements above, suspect areas identified at previous surveys are to be overall and close-up surveyed.

Z10.5 (cont)

4.2.2.2 Cargo Holds

a) An overall survey of all cargo holds is to be carried out.

b) Where considered necessary by the Surveyor as a result of the overall survey as described in 4.2.2.2a, the survey is to be extended to include a close-up survey of those areas of structure in the cargo holds selected by the Surveyor.

4.2.2.3 Extent of Thickness Measurements

a) Thickness measurements are to be carried out to an extent sufficient to determine both general and local corrosion levels at areas subject to close-up survey, where required as per 4.2.2.2b), and as provided in 4.2.2.1c).

b) The extent of thickness measurement may be specially considered provided the Surveyor is satisfied by the close-up survey that there is no structural diminution and the hard protective coatings are found to be in a GOOD condition.

c) Where Substantial Corrosion is found, the extent of thickness measurements is to be increased in accordance with the requirements of Table IV. These extended thickness measurements are to be carried out before the survey is credited as completed. Suspect Areas identified at previous surveys are to be examined. Areas of substantial corrosion identified at previous surveys are to have thickness measurements taken.

For vessels built under IACS Common Structural Rules, the identified substantial corrosion areas may be:

a) protected by coating applied in accordance with the coating manufacturer's requirements and examined at annual intervals to confirm the coating in way is still in good condition, or alternatively

b) required to be measured at annual intervals.

d) Where the hard protective coating in cargo holds, as defined by Z9 is found to be in GOOD condition, the extent of close-up surveys and thickness measurements may be specially considered.

Explanatory note:
For existing bulk carriers, where owners may elect to coat or recoat cargo holds as noted above, consideration may be given to the extent of the close-up and thickness measurement surveys. Prior to the coating of cargo holds of existing ships, scantlings are to be ascertained in the presence of a surveyor.

4.2.3 Double Skin Bulk Carriers 10 – 15 years of age. The following is to apply:

4.2.3.1 The requirements of the Intermediate Survey are to the same extent as the previous Special Survey as required in 2 and 5.1. However, internal examination of fuel oil tanks and pressure testing of all tanks are not required unless deemed necessary by the attending Surveyor.

4.2.3.2 In application of 4.2.3.1, the intermediate survey may be commenced at the second annual survey and be progressed during the succeeding year with a view to completion at the third annual survey in lieu of the application of 2.1.4.

Z10.5 (cont)

4.2.3.3 In application of 4.2.3.1, an under water survey may be considered in lieu of the requirement of 2.2.2.

4.2.4 Double Skin Bulk Carriers over 15 years of age. The following is to apply:

4.2.4.1 The requirements of the Intermediate Survey are to be to the same extent as the previous Special Survey as required in 2 and 5.1.

However, internal examination of fuel oil tanks and pressure testing of all tanks are not required unless deemed necessary by the attending Surveyor.

4.2.4.2 In application of 4.2.4.1, the intermediate survey may be commenced at the second Annual Survey and be progressed during the succeeding year with a view to completion at the third Annual Survey in lieu of the application of 2.1.4.

4.2.4.3 In application of 4.2.4.1, a survey in dry dock is to be part of the Intermediate Survey. The overall and close-up surveys and thickness measurements, as applicable, of the lower portions of the cargo holds and ballast tanks are to be carried out in accordance with the applicable requirements for Intermediate Surveys, if not already performed.

Note: Lower portions of the cargo holds and ballast tanks are considered to be the parts below light ballast water line.

Z10.5 (cont)

5. PREPARATION FOR SURVEY

5.1 Survey Programme

5.1.1 The Owner in co-operation with the Classification Society is to work out a specific Survey Programme prior to the commencement of any part of:

- the Special Survey
- the Intermediate Survey for double skin bulk carriers over 10 years of age.

The Survey Programme is to be in a written format based on the information in Annex IIIA. The survey is not to commence until the Survey programme has been agreed.

5.1.1.1 Prior to the development of the survey programme, the survey planning questionnaire is to be completed by the owner based on the information set out in Annex IIIB, and forwarded to the Classification Society.

5.1.1.2 The Survey Programme at Intermediate Survey may consist of the Survey Programme at the previous Special Survey supplemented by the Executive Hull Summary of that Special Survey and later relevant survey reports.

The Survey Programme is to be worked out taking into account any amendments to the survey requirements implemented after the last Special Survey carried out.

5.1.2 In developing the Survey Programme, the following documentation is to be collected and consulted with a view to selecting holds, tanks, areas, and structural elements to be examined:

- survey status and basic ship information,
- documentation on-board, as described in 6.2 and 6.3,
- main structural plans (scantlings drawings), including information regarding use of high tensile steels (HTS),
- relevant previous survey and inspection reports from both Classification Society and the Owner,
- information regarding the use of the ship's holds and tanks, typical cargoes and other relevant data,
- information regarding corrosion prevention level on the new-building,
- information regarding the relevant maintenance level during operation.

5.1.3 The submitted Survey Programme is to account for and comply, as a minimum, with the requirements of Tables I and II and paragraph 2.5 for close-up survey, thickness measurement and tank testing, respectively, and is to include relevant information including at least:

- basic ship information and particulars,
- main structural plans (scantling drawings), including information regarding use of high tensile steels (HTS),

Z10.5
(cont)

- plan of holds and tanks,
- list of holds and tanks with information on use, protection and condition of coating,
- conditions for survey (e.g., information regarding hold and tank cleaning, gas freeing, ventilation, lighting, etc.),
- provisions and methods for access to structures,
- equipment for surveys,
- nomination of holds and tanks and areas for close-up survey (per 2.3),
- nominations of sections and areas for thickness measurement (per 2.4),
- nomination of tanks for tank testing (per 2.5),
- damage experience related to the ship in question.

5.1.4 The Classification Society will advise the Owner of the maximum acceptable structural corrosion diminution levels applicable to the vessel.

5.1.5 Use may also be made of the Guidelines for Technical Assessment in Conjunction with Planning for Enhanced Surveys of Double Skin Bulk Carriers - Special Survey - Hull, contained in Annex I. These guidelines are a recommended tool which may be invoked at the discretion of the Classification Society, when considered necessary and appropriate, in conjunction with the preparation of the required Survey Programme.

5.2 Conditions for survey

5.2.1 The Owner is to provide the necessary facilities for a safe execution of the survey.

5.2.1.1 In order to enable the attending surveyors to carry out the survey, provisions for proper and safe access, are to be agreed between the owner and the Classification society are to be in accordance with IACS PR 37.

5.2.1.2 Details of the means of access are to be provided in the survey planning questionnaire.

5.2.1.3 In cases where the provisions of safety and required access are judged by the attending surveyor(s) not to be adequate, the survey of the spaces involved is not to proceed.

5.2.2 Cargo holds, tanks and spaces are to be safe for access. Cargo holds, tanks and spaces are to be gas free and properly ventilated. Prior to entering a tank, void or enclosed space, it is to be verified that the atmosphere in the tank is free from hazardous gas and contains sufficient oxygen.

5.2.3 In preparation for survey and thickness measurements and to allow for a thorough examination, all spaces are to be cleaned including removal from surfaces of all loose accumulated corrosion scale. Spaces are to be sufficiently clean and free from water, scale, dirt, oil residues etc. to reveal corrosion, deformation, fractures, damages, or other structural deterioration as well as the condition of the coating. However, those areas of structure whose renewal has already been decided by the owner need only be cleaned and descaled to the extent necessary to determine the limits of the areas to be renewed.

Z10.5 (cont)

5.2.4 Sufficient illumination is to be provided to reveal corrosion, deformation, fractures, damages or other structural deterioration as well as the condition of the coating.

5.2.5 Where Soft or Semi-hard Coatings have been applied, safe access is to be provided for the Surveyor to verify the effectiveness of the coating and to carry out an assessment of the conditions of internal structures which may include spot removal of the coating. When safe access cannot be provided, the soft or semi-hard coating is to be removed.

5.3 Access to structures

5.3.1 For overall surveys, means are to be provided to enable the Surveyor to examine the hull structure in a safe and practical way.

5.3.2 For close-up surveys, one or more of the following means for access, acceptable to the Surveyor, is to be provided:

- permanent staging and passages through structures,
- temporary staging, e.g. ladders and passages through structures,
- hydraulic arm vehicles such as conventional cherry pickers, lifts and movable platforms,
- portable ladders,
- boats or rafts,
- other equivalent means.

5.4 Equipment for survey

5.4.1 Thickness measurement is normally to be carried out by means of ultrasonic test equipment. The accuracy of the equipment is to be proven to the Surveyor as required.

5.4.2 One or more of the following fracture detection procedures may be required if deemed necessary by the Surveyor:

- radiographic equipment,
- ultrasonic equipment,
- magnetic particle equipment,
- dye penetrant.

5.4.3 Explosimeter, oxygen-meter, breathing apparatus, lifelines, riding belts with rope and hook and whistles together with instructions and guidance on their use are to be made available during the survey. A safety check-list is to be provided.

5.4.4 Adequate and safe lighting is to be provided for the safe and efficient conduct of the survey.

5.4.5 Adequate protective clothing is to be made available and used (e.g. safety helmet, gloves, safety shoes, etc.) during the survey.

Z10.5 (cont)

5.5 Rescue and emergency response equipment

If breathing apparatus and/or other equipment is used as 'Rescue and emergency response equipment' then it is recommended that the equipment should be suitable for the configuration of the space being surveyed.

5.6 Survey at sea or at anchorage

5.6.1 Survey at sea or at anchorage may be accepted provided the Surveyor is given the necessary assistance from the personnel onboard. Necessary precautions and procedures for carrying out the survey are to be in accordance with 5.1, 5.2, 5.3 and 5.4.

5.6.2 A communication system is to be arranged between the survey party in the spaces under examination and the responsible officer on deck. This system is to also include the personnel in charge of ballast pump handling if boats or rafts are used.

5.6.3 Surveys of tanks or applicable holds by means of boats or rafts may only be undertaken with the agreement of the Surveyor, who is to take into account the safety arrangements provided, including weather forecasting and ship response under foreseeable conditions and provided the expected rise of water within the tank does not exceed 0.25m.

5.6.4 When rafts or boats will be used for close-up survey the following conditions are to be observed:

.1 only rough duty, inflatable rafts or boats, having satisfactory residual buoyancy and stability even if one chamber is ruptured, are to be used;

.2 the boat or raft is to be tethered to the access ladder and an additional person is to be stationed down the access ladder with a clear view of the boat or raft;

.3 appropriate lifejackets are to be available for all participants;

.4 the surface of water in the tank or hold is to be calm (under all foreseeable conditions the expected rise of water within the tank is not to exceed 0.25 m) and the water level stationary. On no account is the level of the water to be rising while the boat or raft is in use;

.5 the tank, hold or space must contain clean ballast water only. Even a thin sheen of oil on the water is not acceptable; and

.6 at no time is the water level to be allowed to be within 1 m of the deepest under deck web face flat so that the survey team is not isolated from a direct escape route to the tank hatch. Filling to levels above the deck transverses is only to be contemplated if a deck access manhole is fitted and open in the bay being examined, so that an escape route for the survey party is available at all times. Other effective means of escape to the deck may be considered.

5.6.5 Rafts or boats alone may be allowed for inspection of the under deck areas for tanks or spaces, if the depth of the webs is 1.5 m or less.

5.6.6 If the depth of the webs is more than 1.5 m, rafts or boats alone may be allowed only:

.1 when the coating of the under deck structure is in GOOD condition and there is no evidence of wastage; or

Z10.5 (cont)

.2 if a permanent means of access is provided in each bay to allow safe entry and exit. This means:

i. access direct from the deck via a vertical ladder and a small platform fitted approximately 2 m below the deck in each bay; or

ii. access to deck from a longitudinal permanent platform having ladders to deck in each end of the tank. The platform shall, for the full length of the tank, be arranged in level with, or above, the maximum water level needed for rafting of under deck structure. For this purpose, the ullage corresponding to the maximum water level is to be assumed not more than 3m from the deck plate measured at the midspan of deck transverses and in the middle length of the tank.

If neither of the above conditions are met, then staging or an "other equivalent means" is to be provided for the survey of the under deck areas.

5.6.7 The use of rafts or boats alone in paragraphs 5.6.5 and 5.6.6 does not preclude the use of boats or rafts to move about within a tank during a survey.

Reference is made to IACS Recommendation 39 - Guidelines for the use of Boats or Rafts for Close-up surveys.

5.7 Survey Planning Meeting

5.7.1 The establishment of proper preparation and the close co-operation between the attending surveyor(s) and the owner's representatives onboard prior to and during the survey are an essential part in the safe and efficient conduct of the survey. During the survey on board safety meetings are to be held regularly.

5.7.2 Prior to commencement of any part of the renewal and intermediate survey, a survey planning meeting is to be held between the attending surveyor(s), the owner's representative in attendance, the TM firm representative, where involved, and the master of the ship or an appropriately qualified representative appointed by the master or Company for the purpose to ascertain that all the arrangements envisaged in the survey programme are in place, so as to ensure the safe and efficient conduct of the survey work to be carried out. See also 7.1.2.

5.7.3 The following is an indicative list of items that are to be addressed in the meeting:

.1 schedule of the vessel (i.e. the voyage, docking and undocking manoeuvres, periods alongside, cargo and ballast operations, etc.);

.2 provisions and arrangements for thickness measurements (i.e. access, cleaning/de-scaling, illumination, ventilation, personal safety);

.3 extent of the thickness measurements;

.4 acceptance criteria (refer to the list of minimum thicknesses);

.5 extent of close-up survey and thickness measurement considering the coating condition and suspect areas/areas of substantial corrosion;

.6 execution of thickness measurements;

.7 taking representative readings in general and where uneven corrosion/pitting is found;

.8 mapping of areas of substantial corrosion; and

Z10.5 (cont)

.9 communication between attending surveyor(s) the thickness measurement firm operator(s) and owner representative(s) concerning findings.

Z10.5 (cont)

6. DOCUMENTATION ON BOARD

6.1 General

6.1.1 The Owner is to obtain, supply and maintain on board documentation as specified in 6.2 and 6.3, which is to be readily available for the Surveyor.

6.1.2 The documentation is to be kept on board for the life time of the ship.

6.1.3 For tankers and bulk carriers subject to SOLAS Chapter II-1 Part A-1 Regulation 3-10, the Owner is to arrange the updating of the Ship Construction File (SCF) throughout the ship's life whenever a modification of the documentation included in the SCF has taken place. Documented procedures for updating the SCF are to be included within the Safety Management System.

6.2 Survey report file

6.2.1 A Survey Report File is to be a part of the documentation on board consisting of

- reports of structural surveys,
- Executive Hull Summary,
- thickness measurement reports.

6.2.2 The Survey Report File is to be available also in the Owner's and the Classification Society's management offices.

6.3 Supporting documents

6.3.1 The following additional documentation is to be available onboard:

- Survey Programme as required by 5.1 until such time as the Special Survey or Intermediate Survey, as applicable, has been completed,
- Main structural plans of cargo holds and ballast tanks (for CSR ships these plans are to include for each structural element both the as-built and renewal thickness. Any thickness for voluntary addition is also to be clearly indicated on the plans. The midship section plan to be supplied on board the ship is to include the minimum allowable hull girder sectional properties for hold transverse section in all cargo holds),
- Previous repair history,
- Cargo and ballast history,
- Inspection by ship's personnel with reference to
  - Structural deterioration in general,
  - Leakage in bulkheads and piping,
  - Condition of corrosion prevention system, if any.
  - A guidance for reporting is shown in Table III
- Any other information that will help identify critical structural areas and/or Suspect Areas requiring inspection.

Z10.5 (cont)

6.3.2 For tankers and bulk carriers subject to SOLAS Chapter II-1 Part A-1 Regulation 3-10, the Ship Construction File (SCF), limited to the items to be retained on board, is to be available on board.

6.4 Review of documentation on board

6.4.1 Prior to survey, the Surveyor is to examine the completeness of the documentation onboard, and its contents as a basis for the survey.

6.4.2 For tankers and bulk carriers subject to SOLAS Chapter II-1 Part A-1 Regulation 3-10, on completion of the survey, the surveyor is to verify that the update of the Ship Construction File (SCF) has been done whenever a modification of the documentation included in the SCF has taken place.

6.4.2.1 For the SCF stored on board ship, the surveyor is to examine the information on board ship.
In cases where any major event, including, but not limited to, substantial repair and conversion, or any modification to the ship structures, the surveyor is to also verify that the updated information is kept on board the ship.
If the updating of the SCF onboard is not completed at the time of survey, the Surveyor records it and requires confirmation at the next periodical survey.

6.4.2.2 For the SCF stored on shore archive, the surveyor is to examine the list of information included on shore archive.
In cases where any major event, including, but not limited to, substantial repair and conversion, or any modification to the ship structures, the surveyor is to also verify that the updated information is stored on shore archive by examining the list of information included on shore archive or kept on board the ship.
In addition, the surveyor is to confirm that the service contract with of the Archive Center is valid.
If the updating of the SCF Supplement ashore is not completed at the time of survey, the Surveyor records it and requires confirmation at the next periodical survey.

6.4.3 For tankers and bulk carriers subject to SOLAS Chapter II-1 Part A-1 Regulation 3-10, on completion of the survey, the surveyor is to verify any addition and/or renewal of materials used for the construction of the hull structure are documented within the Ship Construction File inventory list.

Z10.5 (cont)

7. PROCEDURES FOR THICKNESS MEASUREMENT

7.1 General

7.1.1 The required thickness measurements, if not carried out by the Classification Society itself, are to be witnessed by a Surveyor of the Society. The Surveyor is to be on board to the extent necessary to control the process.

7.1.2 The thickness measurement firm is to be part of the survey planning meeting to be held prior to commencing the survey.

7.1.3 Thickness measurements of structures in areas where close-up surveys are required shall be carried out simultaneously with close-up surveys.

7.1.4 In all cases the extent of thickness measurements is to be sufficient as to represent the actual average condition.

7.2 Certification of thickness measurement firm

7.2.1 The thickness measurement is to be carried out by a qualified firm certified by the Classification Society according to principles stated in Table VI.

7.3 Number and locations of measurements

7.3.1 Application

The item 7.3 only applies to vessels built under the IACS Common Structural Rules[1]. For vessels not built under IACS Common Structural Rules, the requirements for number and locations of measurements are according to the Rules of the individual Classification Society and/or specific IACS URs depending on ship's age and structural elements concerned.

7.3.2 Number of measurements

Considering the extent of thickness measurements according to the different structural elements of the ship and surveys (special, intermediate and annual), the locations of the points to be measured are given for the most important items of the structure.

7.3.3 Locations of measurements

Table 1 provides explanations and/or interpretations for the application of those requirements indicated in the Rules, which refer to both systematic thickness measurements related to the calculation of global hull girder strength and specific measurements connected to close-up surveys.

Fig 4 to Fig 9 are provided to facilitate the explanations and/or interpretations given in Table 1, to show typical arrangements of double side skin bulk carriers.

[1] IACS Common Structural Rules mean IACS Common Structural Rules for Bulk Carriers (IACS CSR for Bulk Carriers) or IACS Common Structural Rules for Bulk Carriers and Oil Tankers (IACS CSR BC&OT).

Z10.5 (cont)

Table 1: Interpretations of rule requirements for the locations and number of points to be measured for CSR bulk carriers (double skin)

Item	Interpretation	Figure reference
Selected plates on deck, tank top, bottom, double bottom and wind-and-water area	«Selected» means at least a single point on one out of three plates, to be chosen on representative areas of average corrosion	
All deck, tank top and bottom plates and wind-and-water strakes	At least two points on each plate to be taken either at each 1/4 extremity of plate or at representative areas of average corrosion	
Transverse section	A transverse section includes all longitudinal members such as plating, longitudinals and girders at the deck, sides, bottom, inner bottom, hopper sides, inner sides and top wing inner sides.	Fig 4
All cargo hold hatch covers and coamings	Including plates and stiffeners	Locations of points are given in Fig 5
Transverse section of deck plating outside line of cargo hatch openings	Two single points on each deck plate (to be taken either at each 1/4 extremity of plate or at representative areas of average corrosion) between the ship sides and hatch coamings in the transverse section concerned	
All deck plating and underdeck structure inside line of hatch openings between cargo hold hatches	«All deck plating» means at least two points on each plate to be taken either at each 1/4 extremity of plate or at representative areas of average corrosion. “Under deck structure”: at each short longitudinal girder: three points for web plating (fwd/middle/aft), single point for face plate, one point for web plating and one point for face plating of transverse beam in way. At each ends of transverse beams, one point for web plating and one point for face plating	Extent of areas is shown in Fig 10 Locations of points are given in Fig 9

Z10.5 (cont)

Item	Interpretation	Figure reference
Transverse frame in double skin tank		Fig 4
Transverse bulkheads in cargo holds	Includes bulkhead plating, stiffeners and girders, including internal structure of upper and lower stools, where fitted. Two selected bulkheads: one is to be the bulkhead between the two foremost cargo holds and the second may be chosen in other positions	Areas of measurements are shown in Fig 10 Locations of points are given in Fig 7
One transverse bulkhead in each cargo hold	This means that the close-up survey and related thickness measurements are to be performed on one side of the bulkhead; the side is to be chosen based on the outcome of the overall survey of both sides. In the event of doubt, the Surveyor may also require (possibly partial) close-up survey on the other side	Areas of measurements are shown in Fig 10 Locations of points are given in Fig 7
Transverse bulkheads in one topside, hopper and double bottom ballast tank	Includes bulkhead and stiffening systems. The ballast tank is to be chosen based on the history of ballasting among those prone to have the most severe conditions	Locations of points are given in Fig 8
Transverse webs in ballast tanks	Includes web plating, face plates, stiffeners and associated plating and longitudinals. One of the representative tanks of each type (i.e. topside or hopper or side tank) is to be chosen in the forward part	Areas of measurements are shown in Fig 10 Locations of points are given in Fig 6

Z10.5
(cont)

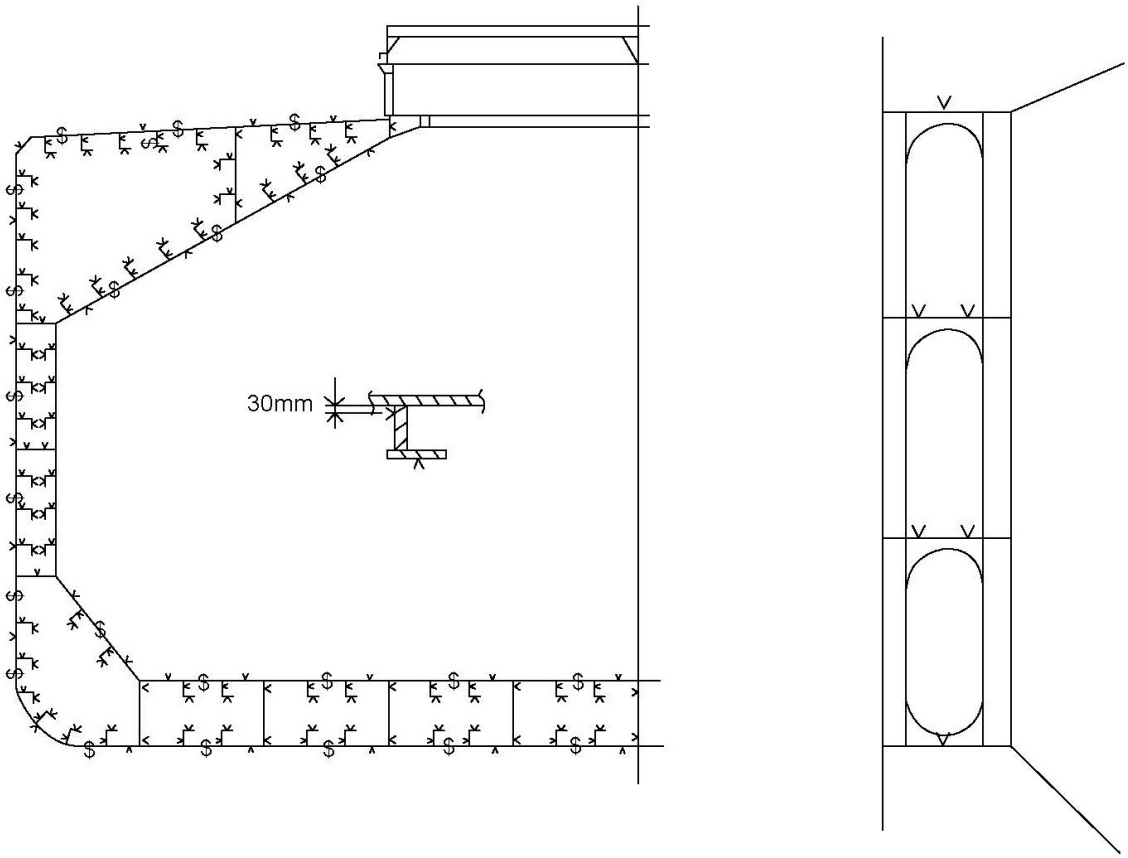

Double Skin Bulk Carrier

Note: Measurements are to be taken on both port and starboard sides of the selected transverse section.

Figure 4 - Transverse section of a double skin bulk carrier