Z24
(Nov 2010) (Corr.1 July 2011)

Survey Requirements for Shell and Inner Doors of Ro-Ro Ships

CONTENTS

1. Application
2. Definitions
3. Special Survey
4. Annual Survey

TABLE 1

Minimum Requirements for Close-Up Surveys of Doors, Locking, Securing and Supporting Devices and Fittings

---

Note:

This UR is to be uniformly implemented by IACS Societies for surveys commenced on or after 1 January 2012.

Z24
(cont)

1. Application

1.1 These requirements are applicable to the survey of bow, inner, side shell and stern doors of Ro-Ro passenger (Ro-Pax) and Ro-Ro cargo ships, to the extent appropriate to the arrangement and equipment of each ship.

The requirements are additional to the classification requirements applicable to the remainder of the ship. Refer to UR Z7.

1.2 Special consideration may be given in application of relevant sections of this Unified Requirement to commercial vessels owned or chartered by Governments, which are utilized in support of military operations or service.

2. Definitions

2.1 Ro-Ro Ship
Ro-Ro ship - For the purpose of this Unified Requirement, a Ro-Ro ship is a ship which utilizes a loading ramp to enable wheeled vehicles to be rolled-on and rolled-off the ship.

2.2 Ro-Ro passenger ship (Ro-Pax)
Ro-Ro passenger ship - a passenger ship with Ro-Ro spaces or special category spaces.

2.3 Ro-Ro spaces
Ro-Ro spaces - spaces not normally sub-divided in any way and normally extending to either a substantial length or the entire length of the ship, in which motor vehicles with fuel in their tanks for their own propulsion and / or goods (packaged or in bulk, in or on rail or road cars, vehicles (including road or rail tankers), trailers, containers, pallets, demountable tanks or in or on similar stowage units or, other receptacles) can be loaded and unloaded normally in a horizontal direction.

2.4 Special category spaces
Special category spaces - those enclosed vehicle spaces above or below the bulkhead deck, into and from which vehicles can be driven and to which passengers have access. Special category spaces may be accommodated on more than one deck provided that the total overall clear height for vehicles does not exceed 10m.

2.5 Securing device
Securing device - a device used to keep the door closed by preventing it from rotating about its hinges.

2.6 Supporting device
Supporting device - a device used to transmit external or internal loads from the door to a securing device and from the securing device to the ship’s structure, or a device other than a securing device, such as a hinge, stopper or other fixed device, that transmits loads from the door to the ship’s structure.

2.7 Locking device
Locking device - a device that locks a securing device in the closed position.

2.8 Close-Up Survey
Close-Up Survey - a survey where the details of structural components are within the close visual inspection range of the surveyor, i.e. normally within reach of hand.

Z24
(cont)

3. Special Survey

3.1 The Special Survey is to include, in addition to the requirements of the Annual Survey as required in 4.1, examination, tests and checks of sufficient extent to verify that the bow, inner, side shell and stern doors, are in satisfactory condition and considered able to remain in compliance with applicable requirements, subject to proper maintenance and operation in accordance with the Operation and Maintenance Manual (OMM) or manufacturer's recommendations and the periodical surveys being carried out at the due dates for the five year period until the next Special Survey.

3.2 The examinations of the doors are to be supplemented by thickness measurements and testing to verify compliance with applicable requirements so that the structural and weathertight integrity remain effective. The aim of the examination is to identify corrosion, significant deformation, fractures, damages or other structural deterioration, that may be present.

3.3 The bow, inner, side shell and stern doors are to be surveyed as follows:

3.3.1 A survey of the items listed in 4.4, including close-up survey of securing, supporting and locking devices, together with welding, is to be carried out, refer to Table 1.

3.3.2 Non-destructive testing and thickness measurements are to be carried out on securing, supporting and locking devices, including welding, to the extent considered necessary by the surveyor. Whenever a crack is found, an examination with NDT is to be carried out in the surrounding area and for similar items as considered necessary by the surveyor.

3.3.3 The maximum thickness diminution of hinging arms, securing, supporting and locking devices is to be treated according to the normal procedure for each Classification Society for primary structures, but is not to be more than 15% of the as-built thickness or the maximum corrosion allowance of that Society, whichever is less. Certain designs may be subject to individual Society's special consideration.

3.3.4 Checking the effectiveness of sealing arrangements by hose testing or equivalent is to be carried out.

3.3.5 Clearances of hinges, bearings and thrust bearings are to be taken. Unless otherwise specified in the OMM or by manufacturer's recommendation, the measurement of clearances on Ro-Ro cargo ships may be limited to representative bearings where dismantling is needed in order to measure the clearances.
If dismantling is carried out, a visual examination of hinge pins and bearings together with NDT of the hinge pin is to be carried out.

3.3.6 The non-return valves of the drainage system are to be dismantled and examined.

Z24
(cont)

4. Annual Survey

4.1 The survey is to consist of an examination to verify, as far as is practicable, that the bow, inner, side shell and stern doors are maintained in a satisfactory condition.

4.2 Confirmation is to be obtained that no unapproved changes have been made to the bow, inner, side shell and stern doors since the last survey.

4.3 Documents
If an Operating and Maintenance Manual (OMM) is required, it is to be verified that an approved copy is on board and any possible modifications are included.
It is to be verified that documented operating procedures for closing and securing doors are kept on board and posted at an appropriate place.
The surveyor shall examine the OMM with special attention to the register of inspections and its contents as a basis for the survey.

4.4 Structural examination
Bow, inner, side shell and stern doors are to be examined with particular attention paid to:

- Structural arrangement of doors including plating, secondary stiffeners, primary structure, hinging arms and welding;

- Shell structure surrounding the opening of the doors and the securing, supporting and locking devices including shell plating, secondary stiffeners, primary structure, and welding;

- Hinges and bearings, thrust bearings;

- Hull and door side supports for securing, supporting and locking devices;

- Close-up survey of securing, supporting and locking devices including welding, refer to Table 1.

Whenever a crack is found, an examination with NDT is to be carried out in the surrounding area and for similar items as considered necessary by the surveyor.

4.5 Measurement of clearances
Clearances of hinges, bearings and thrust bearings are to be taken, where no dismantling is required. Where the function test is not satisfactory, dismantling may be required to measure the clearances. If dismantling is carried out, a visual examination of hinge pins and bearings together with NDT of the hinge pin is to be carried out. Clearances of securing, supporting and locking devices are to be measured, where indicated in the OMM.

4.6 Sealing arrangement
An examination of packing material / rubber gaskets and retaining bars or channels, including welding is to be carried out.

4.7 Drainage arrangement
An examination of drainage arrangement, including bilge wells and drain pipes is to be carried out, where fitted. A test of the bilge system between the inner and outer doors is to be carried out.

4.8 Function test of doors
Checking of the satisfactory operation of the bow, inner, side shell and stern doors during a complete opening and closing operation is to be made, as applicable, including:

Z24 (cont)

- Proper working of the hinging arms and hinges;
- Proper engagement of the thrust bearings;
- Device for locking the door in the open position;
- Securing, supporting and locking devices;
- Proper sequence of the interlock system for the opening / closing system and the securing and locking devices;
- Mechanical lock of the securing devices;
- Proper locking of hydraulic securing devices in the event of a loss of the hydraulic fluid, according to the procedure provided by the OMM;
- Correct indication of open / closed position of doors and securing / locking devices at navigation bridge and other control stations;
- Isolation of the hydraulic securing / locking devices from other hydraulic systems;
- Confirmation that the operating panels are inaccessible to unauthorized persons;
- Verification that a notice plate giving instructions to the effect that all securing devices are to be closed and locked before leaving harbour is placed at each operating panel and supplemented by warning indicator lights;
- Examination of electrical equipment for opening, closing and securing the doors.

4.9 Function test of the indicator system

Checking of the satisfactory operation of the indicator system, where fitted, is to be carried out, as applicable, including:

- Proper visible indication and audible alarm on the navigation bridge panel, according to the selected function "harbour / sea voyage" and on the operating panel;
- Lamp test function on both panels;
- Verification that it is not possible to turn off the indicator light on both panels;
- Verification of fail safe performance, according to the procedure provided by the OMM;
- Confirmation that power supply for indicator system is supplied by the emergency source or other secure power supply and independent of the power supply for operating the doors;
- Proper condition of sensors and protection from water, ice formation and mechanical damage.

4.10 Test of water leakage detection system

Where fitted, the water leakage detection system is to be tested including proper audible alarm on the navigation bridge panel and on the engine control room panel, according to the procedure provided by the OMM.

Z24
(cont)

4.11 Test of television surveillance system
Where fitted, the television surveillance system is to be tested including proper indication on the navigation bridge monitor and on the engine control room monitor.

4.12 Tightness test
A hose test or equivalent is to be carried out. If the visual examination and function test have shown satisfactory results, the tightness test of shell doors on Ro-Ro cargo ships need not be carried out unless considered necessary by the attending surveyor.

4.13 NDT and Thickness Measurements
When considered necessary by the surveyor, NDT and thickness measurements may be required after visual examination and function test.

Z24
(cont)

Table 1

Minimum Requirements for Close-Up Surveys of Doors, Locking, Securing and Supporting Devices and Fittings

The following is a list of the devices and fittings and associated welding to be subject to close-up survey by the attending Surveyor.

- Cylinder securing pins, supporting brackets, back-up brackets (where fitted) and their welded connections;

- Hinge pins, supporting brackets, back-up brackets (where fitted) and their welded connections;

- Locking hooks, securing pins, supporting brackets, back-up brackets (where fitted) and their welded connections;

- Locking pins, supporting brackets, back-up brackets (where fitted) and their welded connections;

- Locating and stopper devices and their welded connections.

Z24
(cont)

Inner Bow Doors – double leaf side hinged

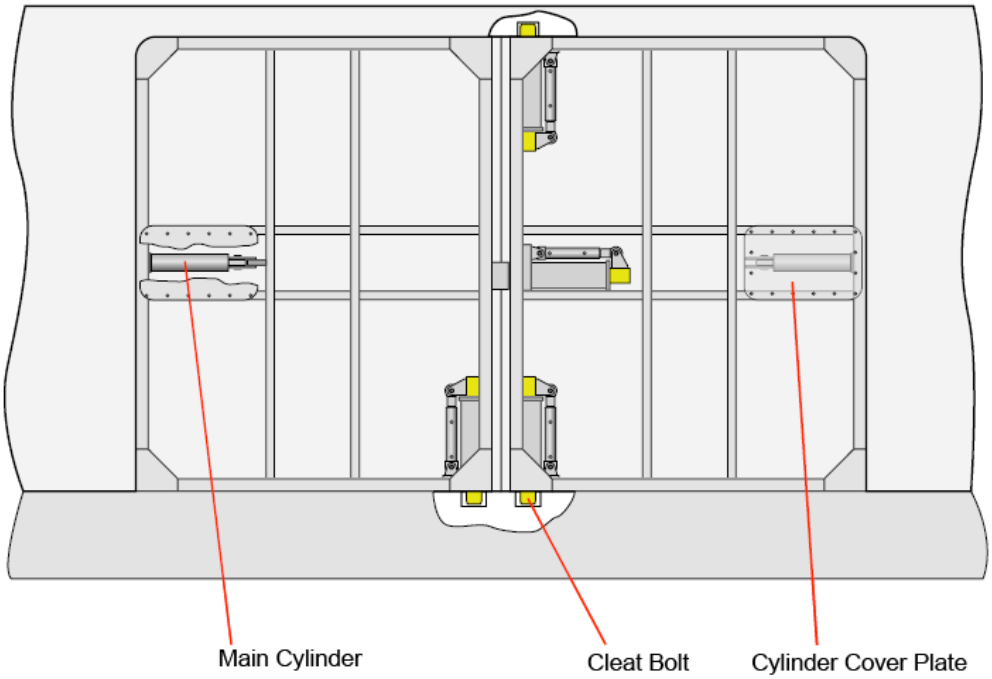

Illustration by courtesy of MacGREGOR Group

Bow Loading Ramp – stowed position, aft part (inner door) disconnected

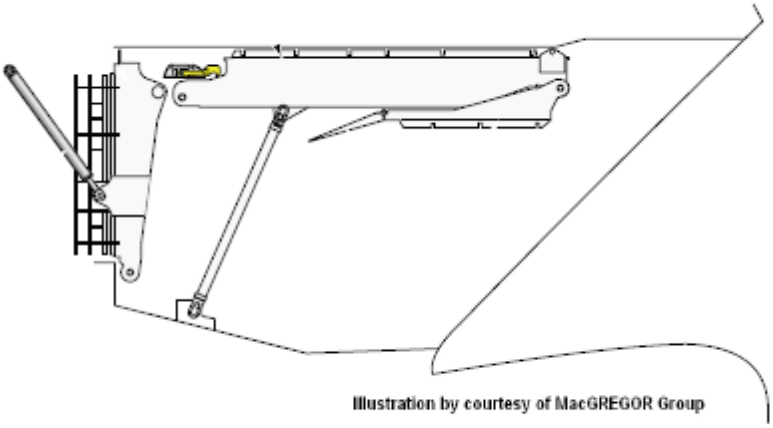

Illustration by courtesy of MacGREGOR Group

Z24
(cont)

Bow Loading Ramp – beginning of opening sequence, aft part (inner door) connected by hydraulic hinge pin

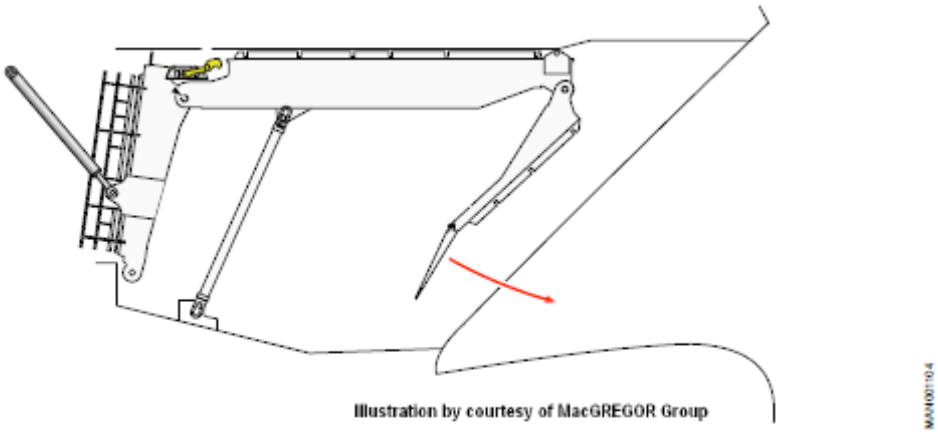

Bow Loading Ramp – ramp partly extended to quay

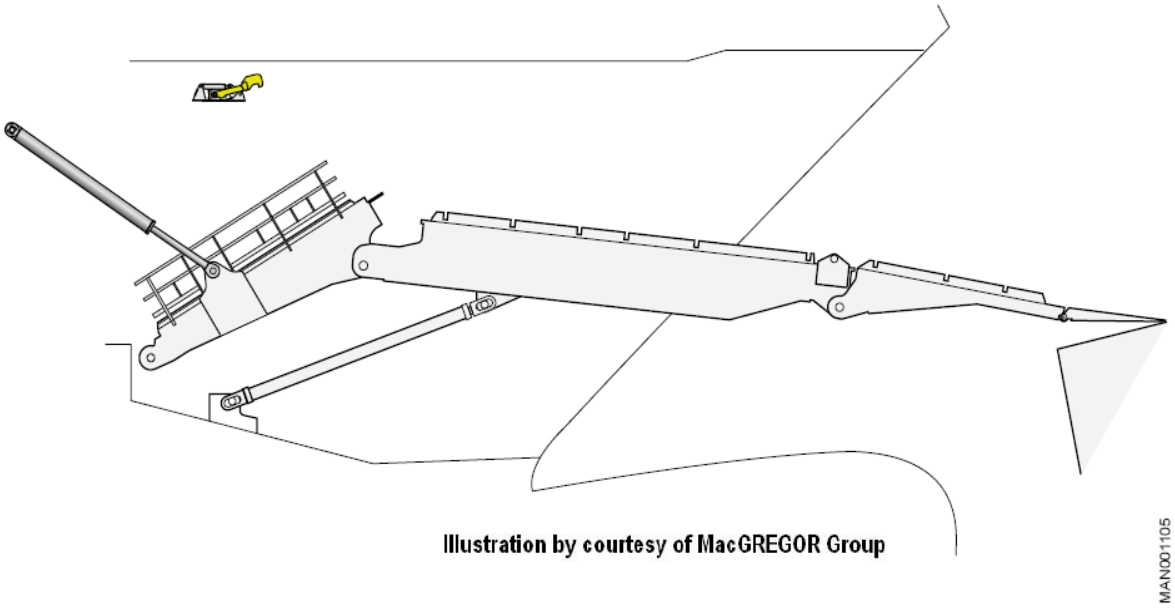

Z24
(cont)

Bow Loading Ramp – ramp fully extended to quay

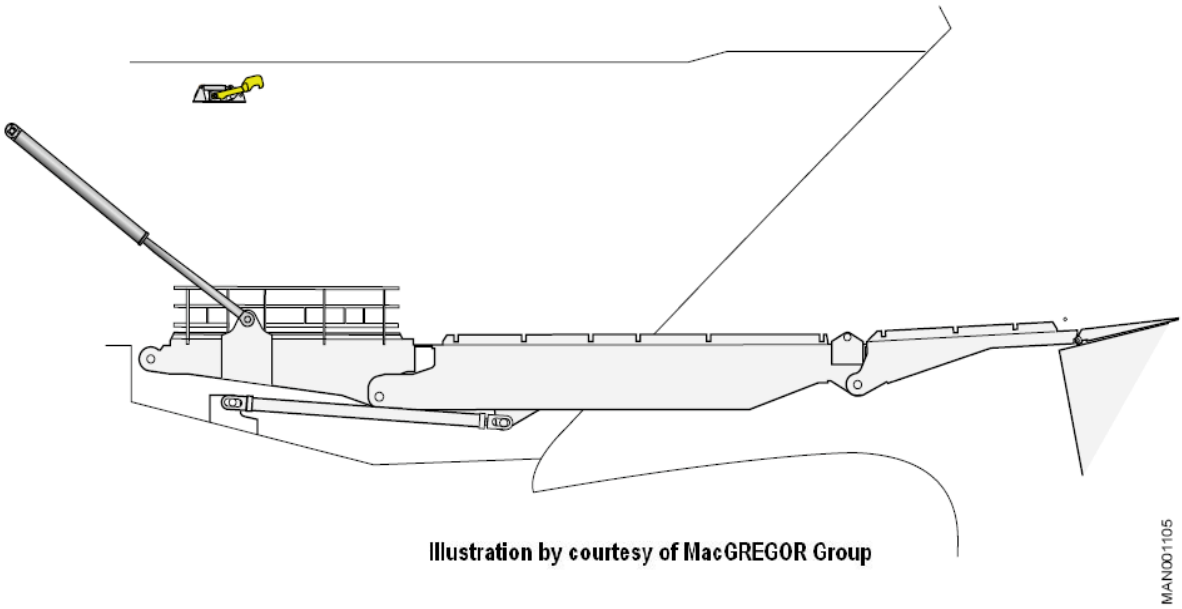

Inner Bow Door – single leaf top hinged, type 1

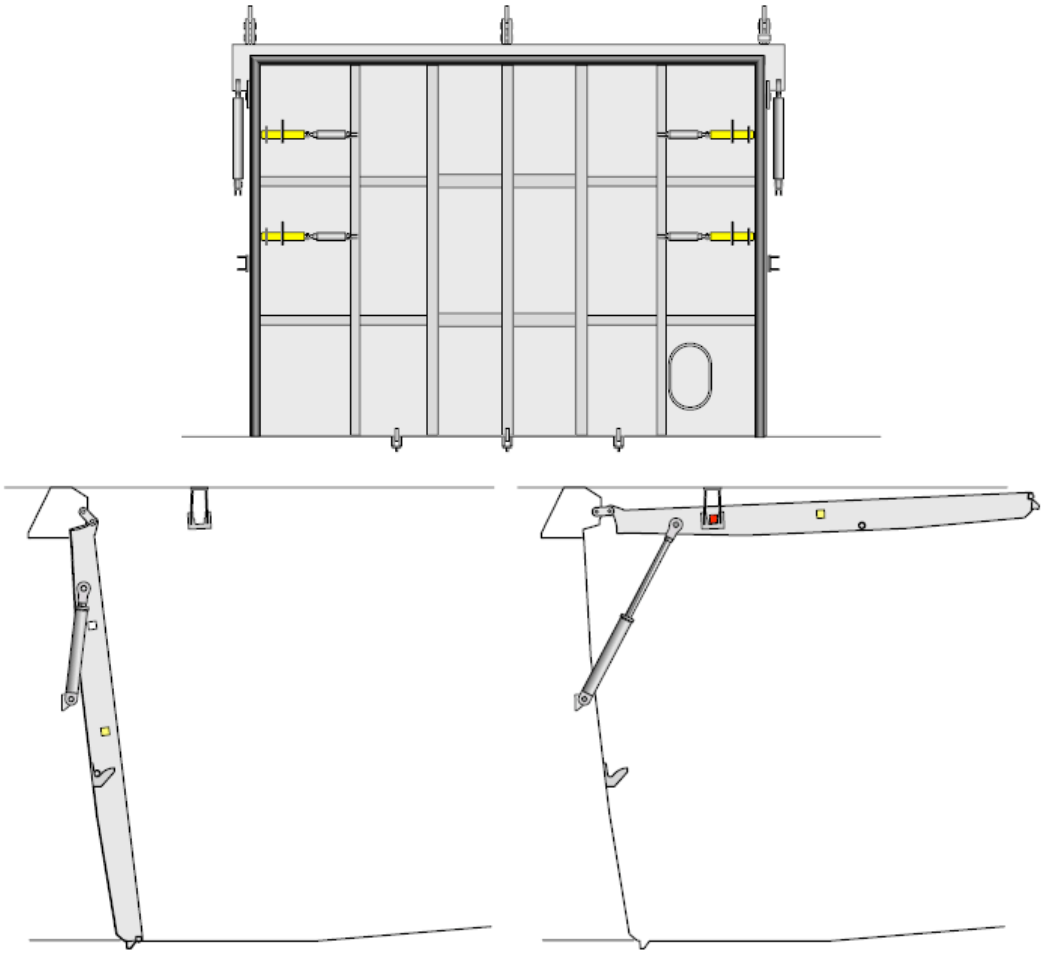

Z24
(cont)

Inner Bow Door – single leaf top hinged, type 2

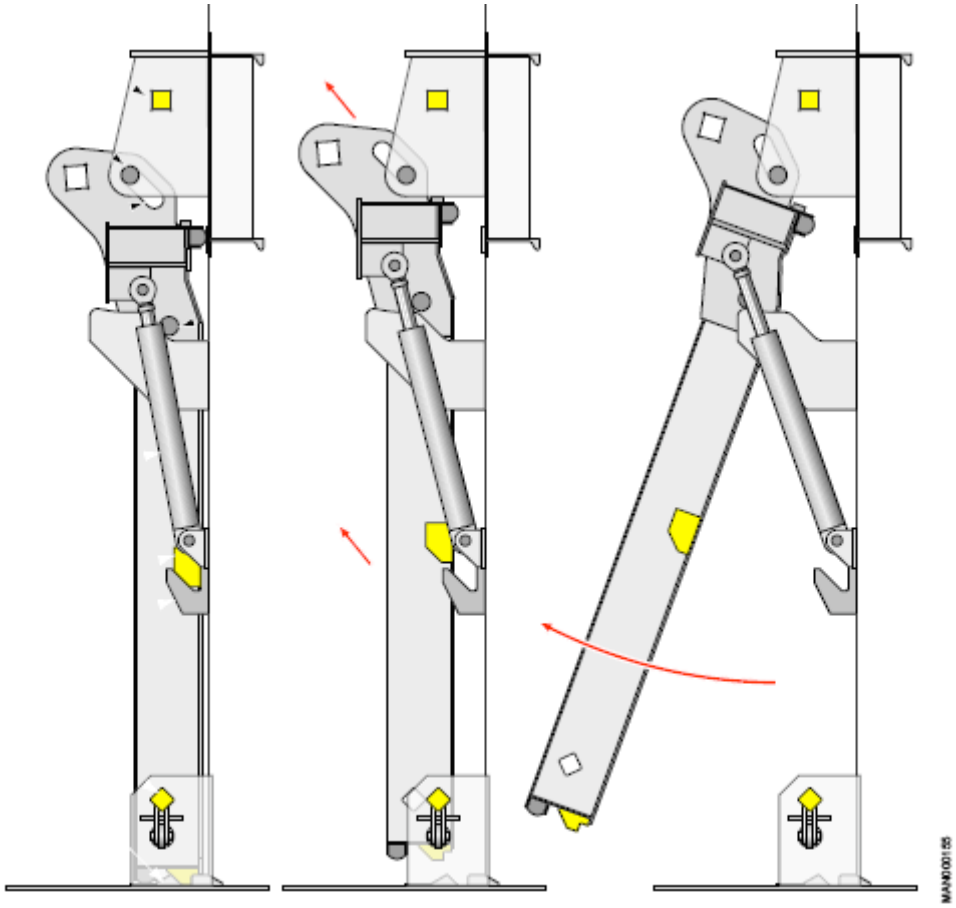

Illustration by courtesy of MacGREGOR Group

Bow Loading Ramp – side opening bow doors

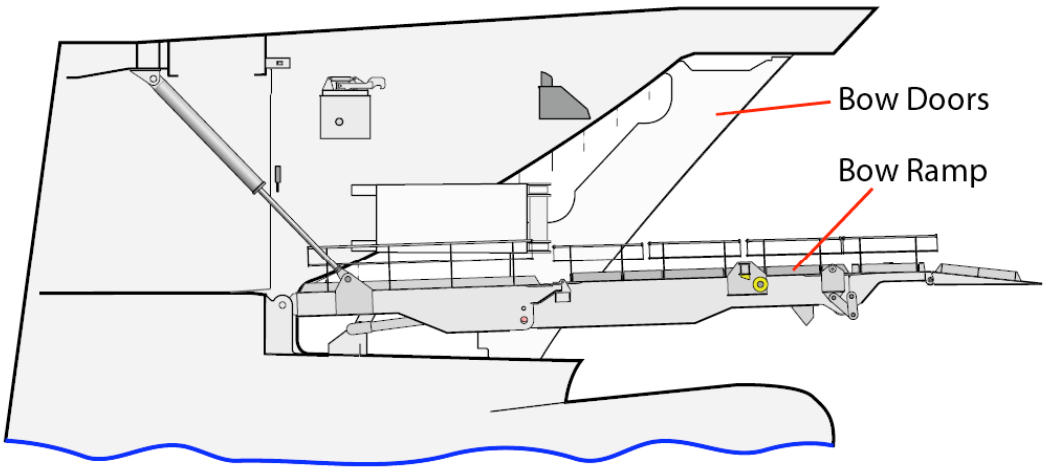

Illustration by courtesy of MacGREGOR Group

Z24
(cont)

Bow side opening door – closed, side view

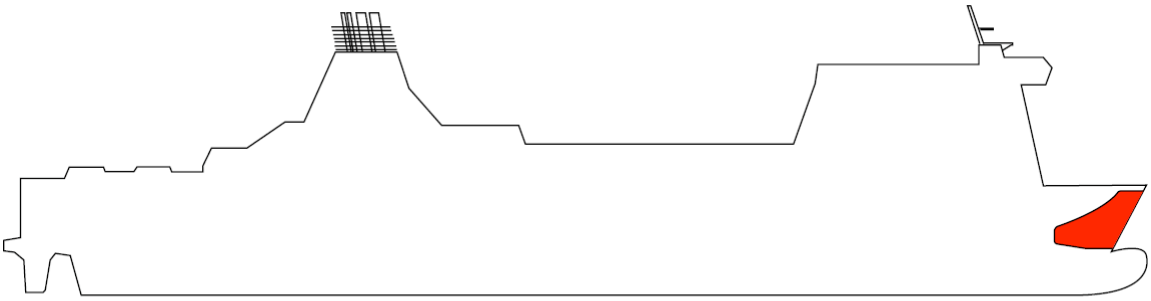

Illustration by courtesy of MacGREGOR Group

Bow side opening door – closed, top view

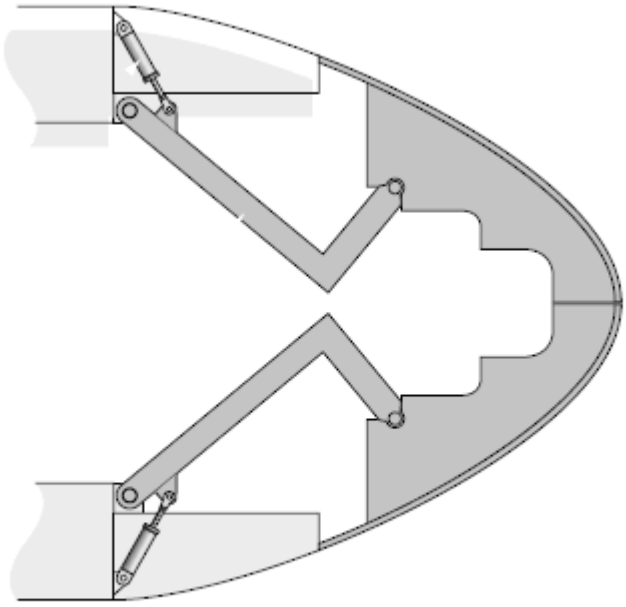

Illustration by courtesy of MacGREGOR Group

Z24
(cont)

Bow side opening door – door panel details

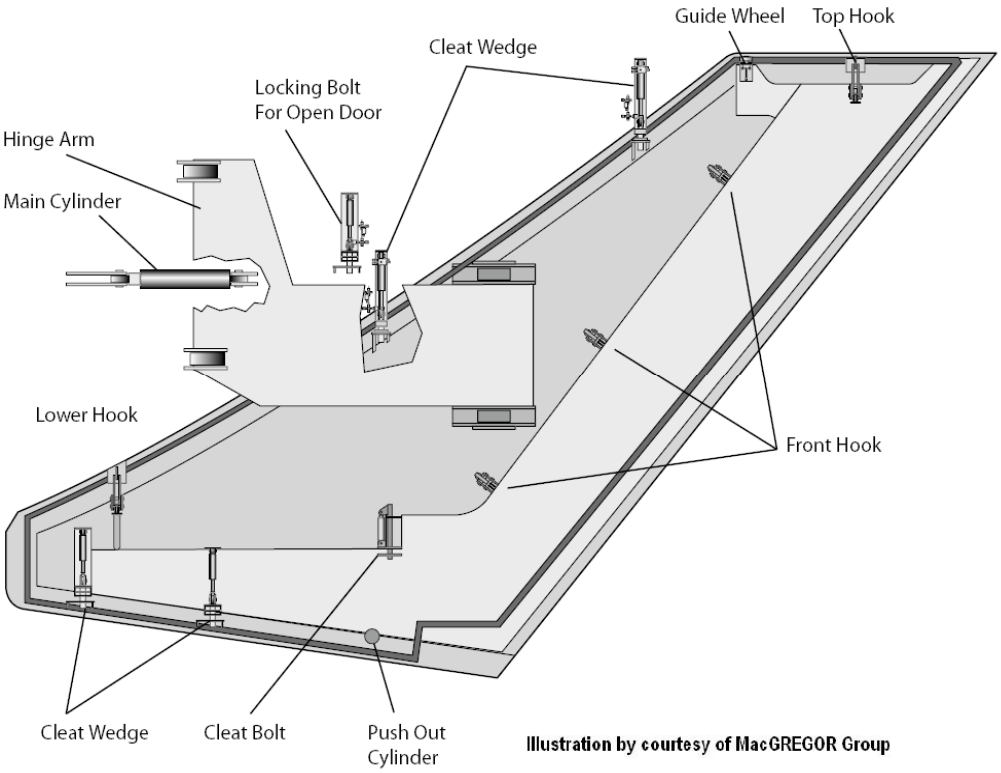

Illustration by courtesy of MacGREGOR Group

Bow side opening door – open, top view

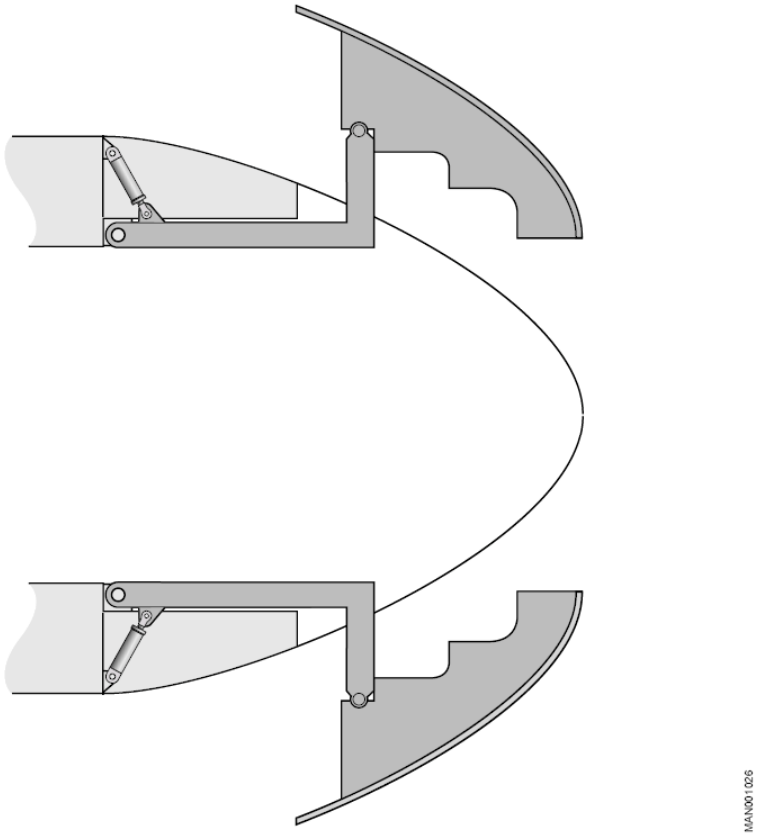

Illustration by courtesy of MacGREGOR Group

Z24
(cont)

Bow Loading Ramp – visor type bow doors, general arrangement

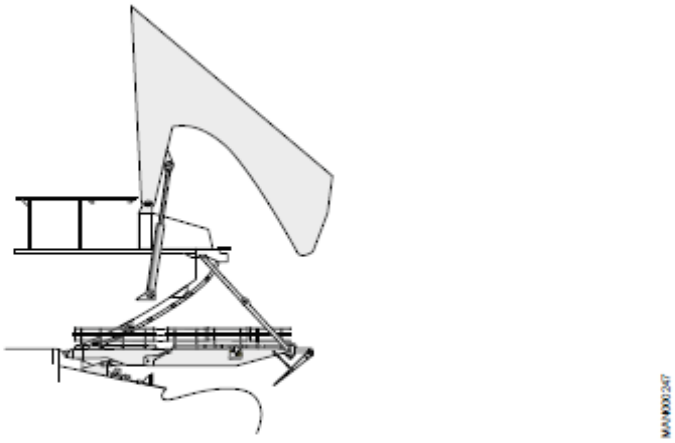

Illustration by courtesy of MacGREGOR Group

Bow Visor Door – general arrangement

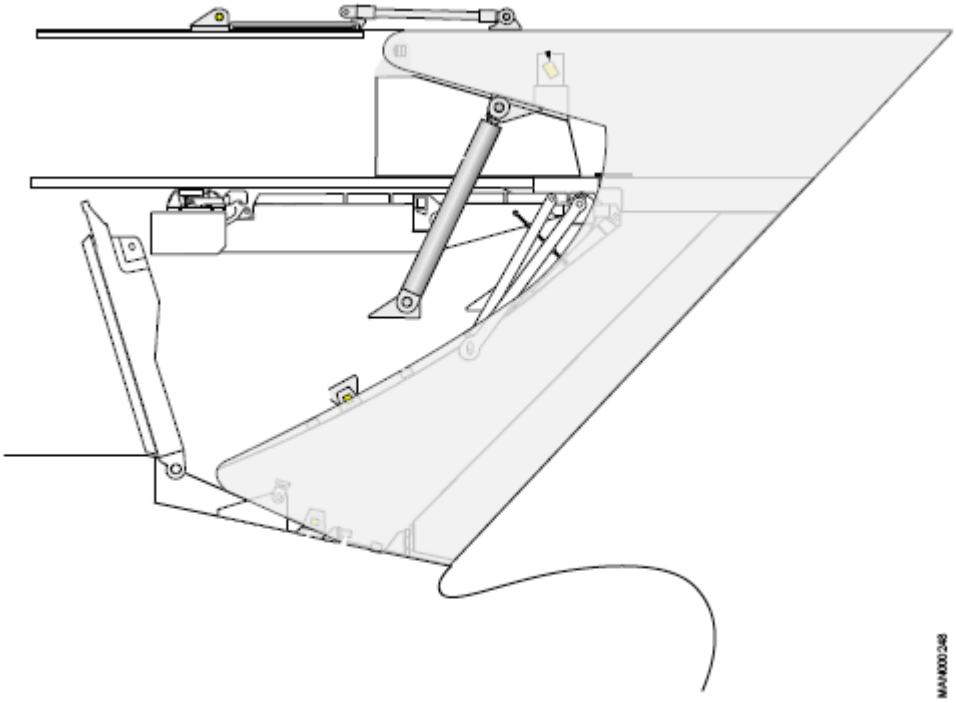

Illustration by courtesy of MacGREGOR Group

Z24
(cont)

Cleating Hook 1

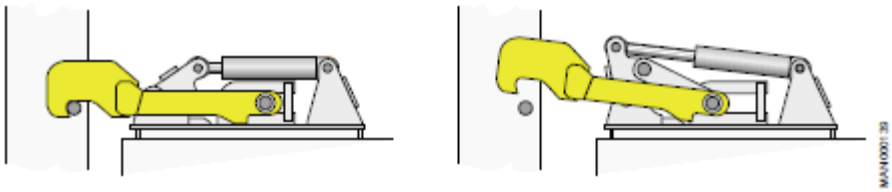

Illustration by courtesy of MacGREGOR Group

Cleating Hook 2

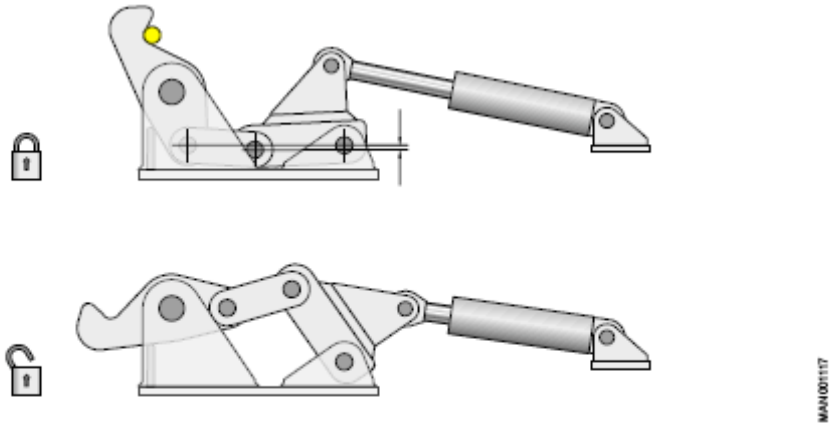

Illustration by courtesy of MacGREGOR Group

Cleating Wedge

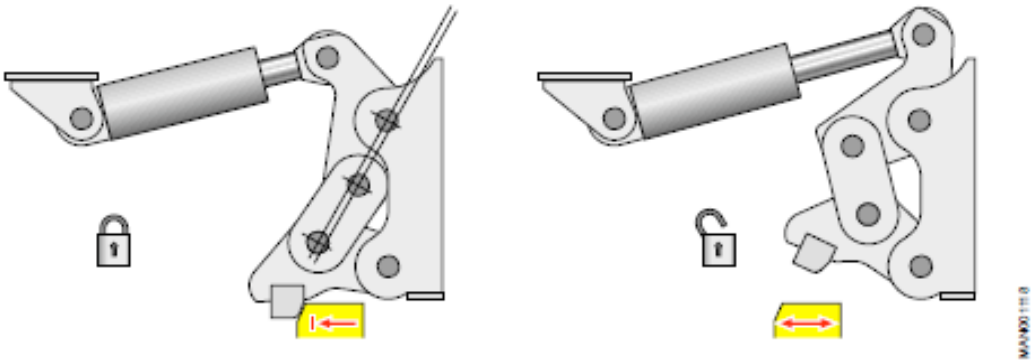

Illustration by courtesy of MacGREGOR Group

Z24
(cont)

Hydraulic Actuators 1

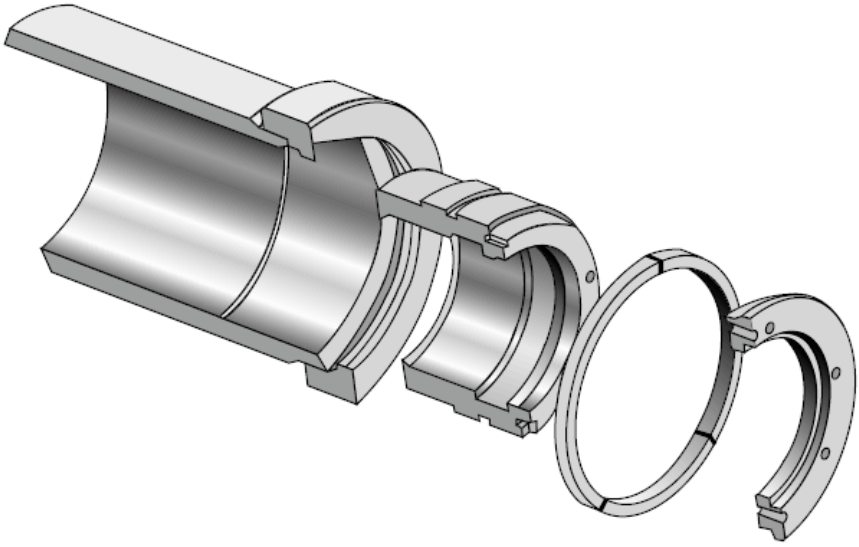

Illustration by courtesy of MacGREGOR Group

MAN000020

Hydraulic Actuators 2

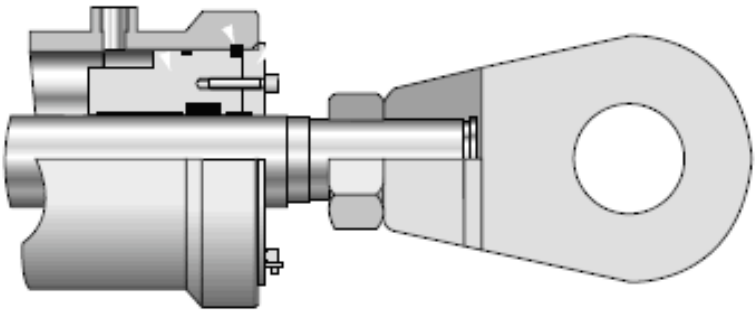

Illustration by courtesy of MacGREGOR Group

MAN000021

Z24
(cont)

Hydraulic Actuators 3

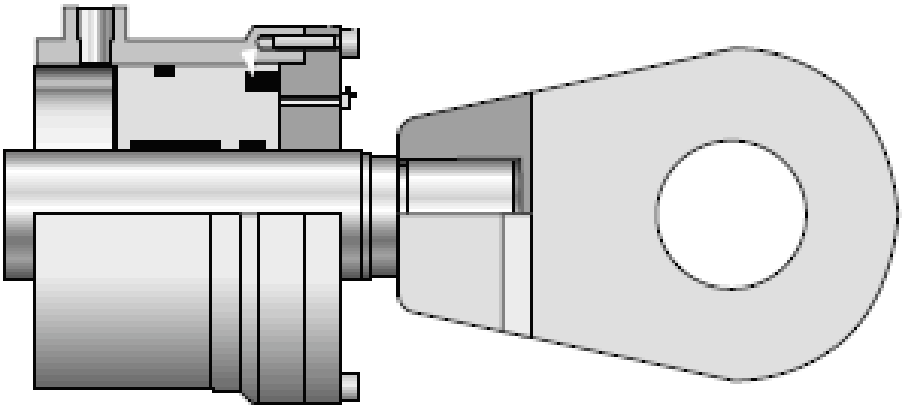

MAN000022

Illustration by courtesy of MacGREGOR Group

Hydraulic Actuators 4

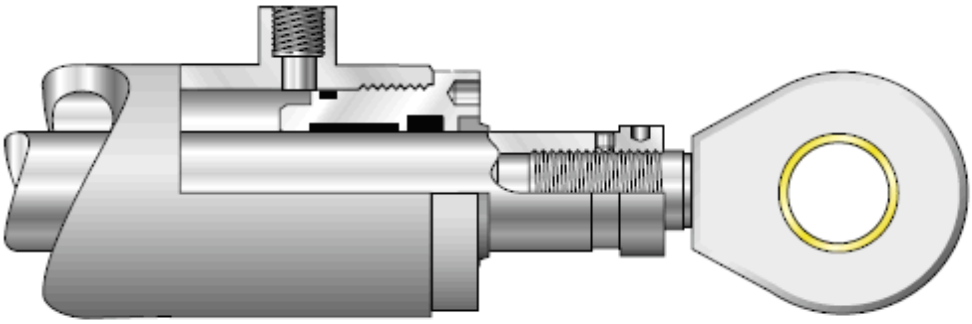

MAN000023

Illustration by courtesy of MacGREGOR Group

Z24
(cont)

Control Panel – closing door

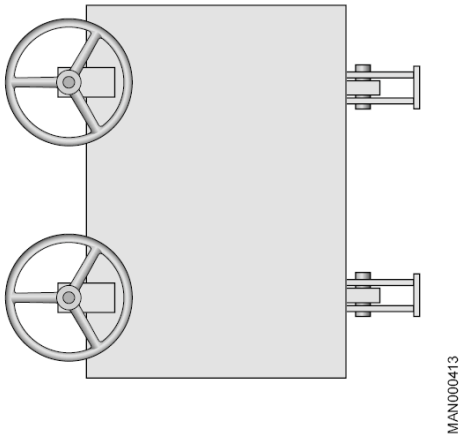

Illustration by courtesy of MacGREGOR Group

Bunker Door – closed, inside view

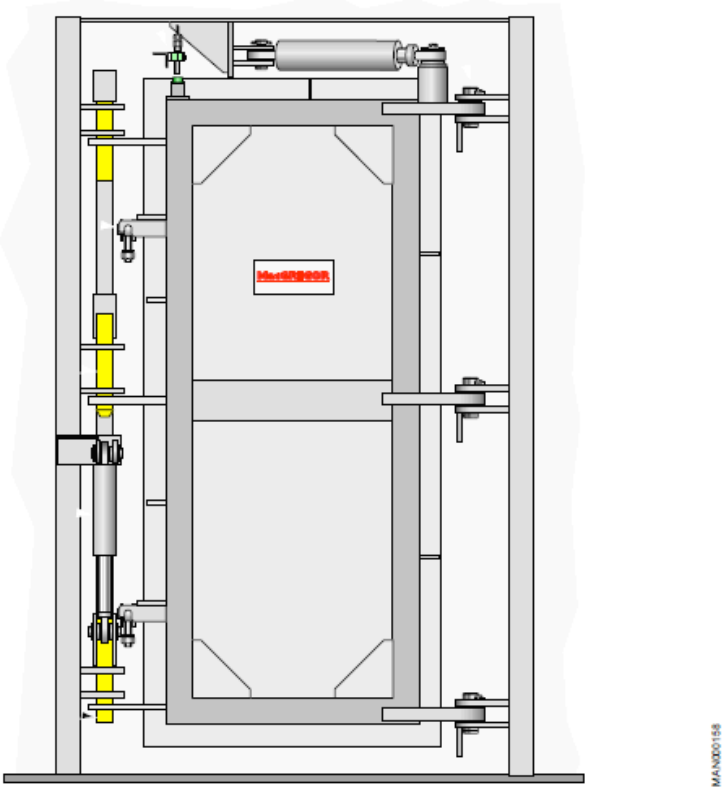

Illustration by courtesy of MacGREGOR Group

Z24
(cont)

Bunker Door – Emergency Cleat

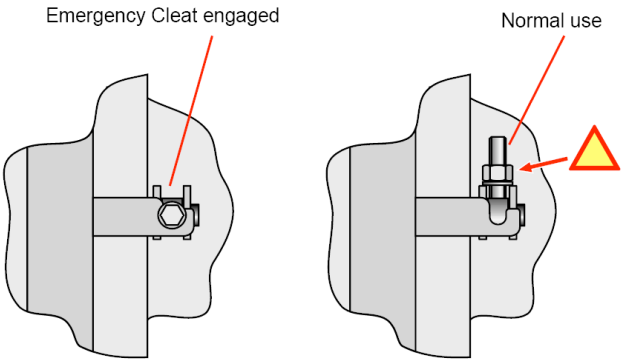

Illustration by courtesy of MacGREGOR Group

Bunker Port – type 1, closed, inside view

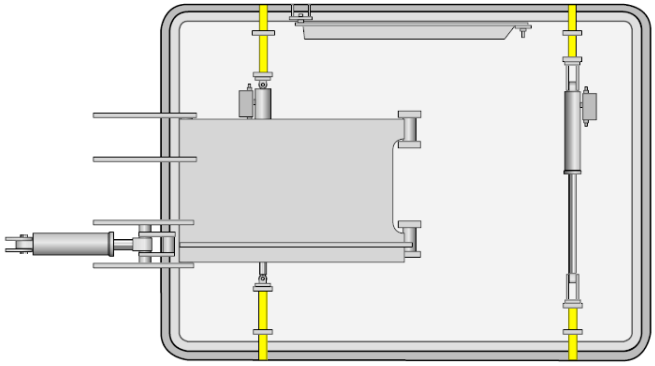

MAN000412

Illustration by courtesy of MacGREGOR Group

Bunker Port – type 2, closed, inside view

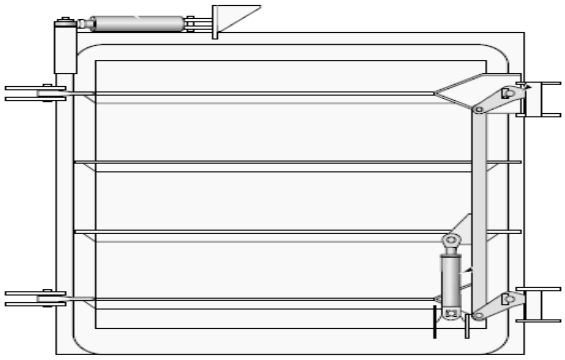

Illustration by courtesy of MacGREGOR Group

Z24
(cont)

Cargo Door – closed, inside

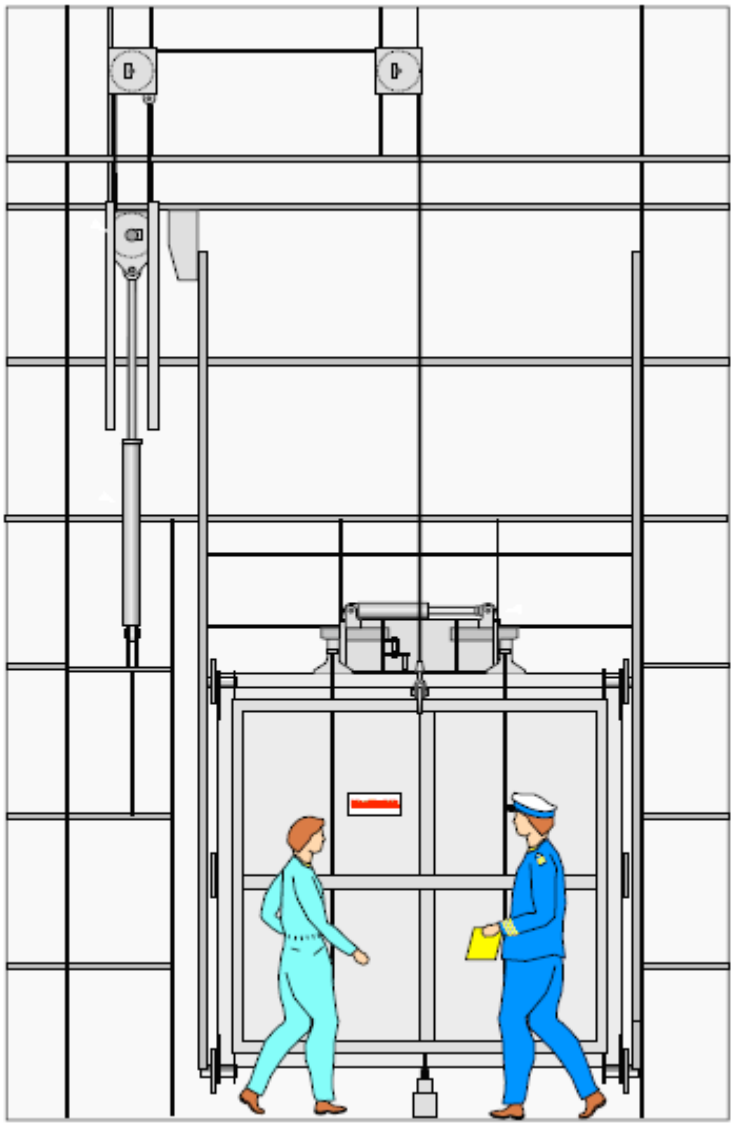

Illustration by courtesy of MacGREGOR Group

Z24
(cont)

Cargo Door – open, inside

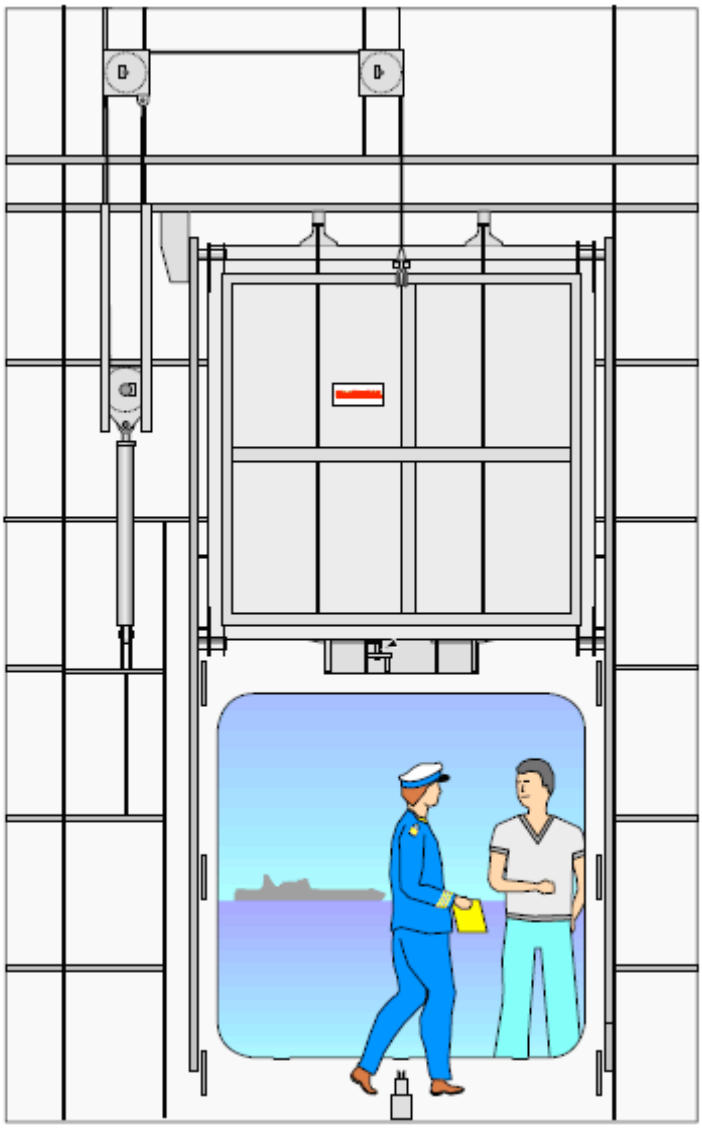

Illustration by courtesy of MacGREGOR Group

Z24
(cont)

Cargo Door – principle function

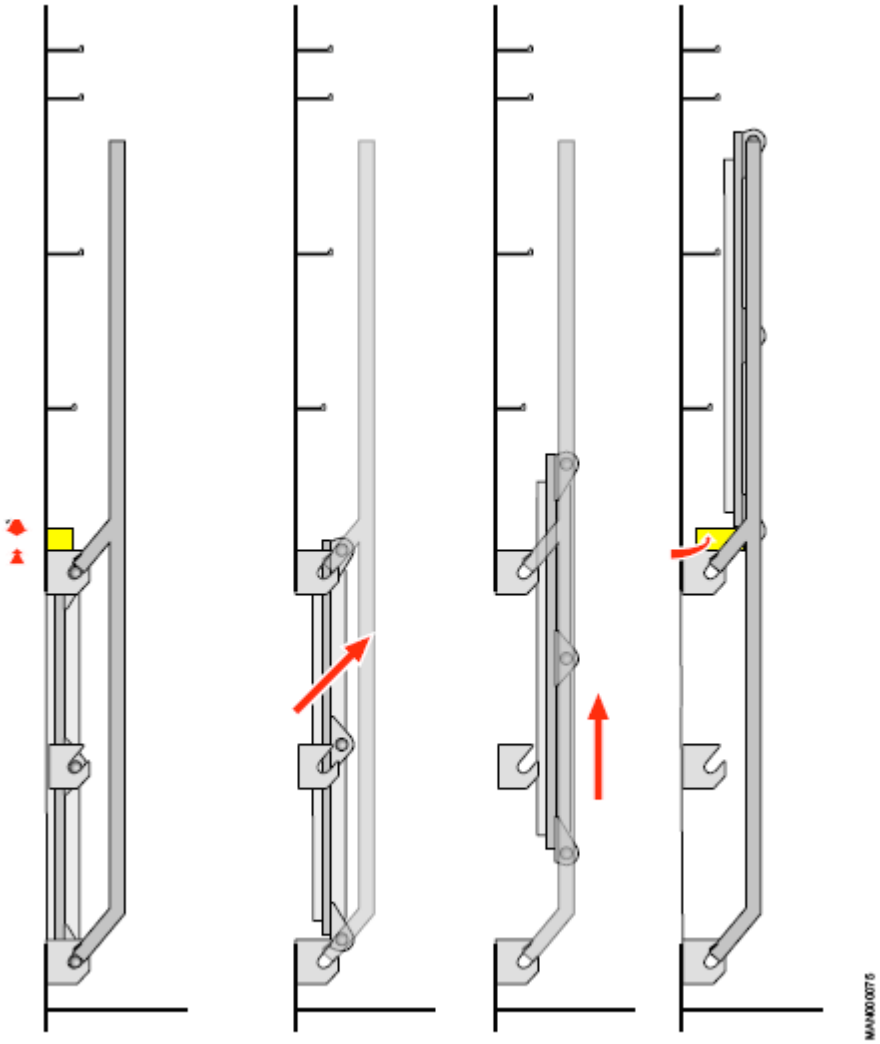

Illustration by courtesy of MacGREGOR Group

Z24
(cont)

Cargo Door – type side hydraulic securing device disengaged

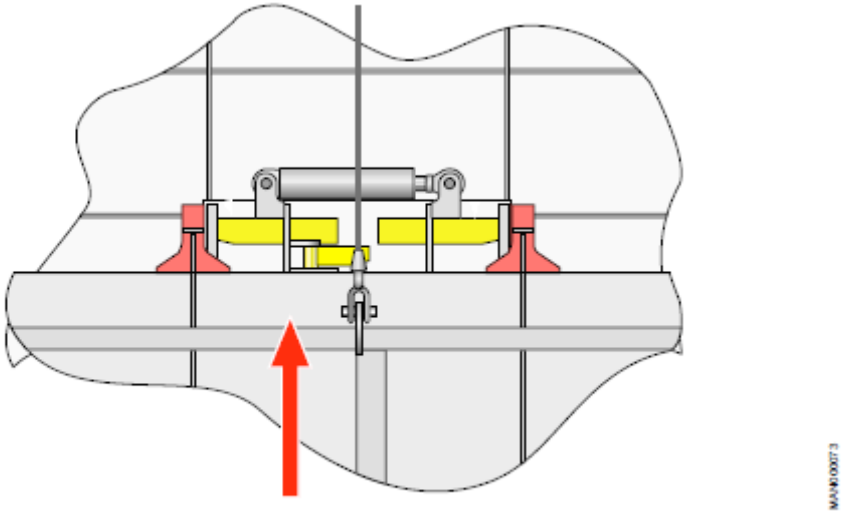

Illustration by courtesy of MacGREGOR Group

Cargo Door – top side hydraulic securing device engaged

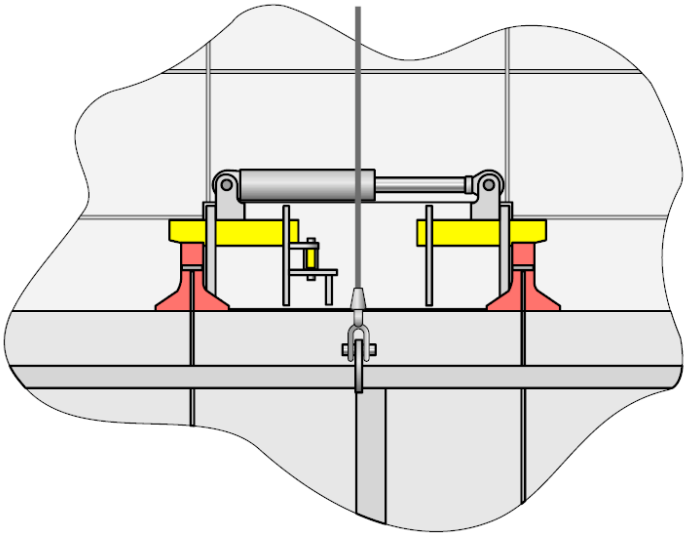

Illustration by courtesy of MacGREGOR Group

Z24
(cont)

Side Shell Door – double leaf, closed, inside view

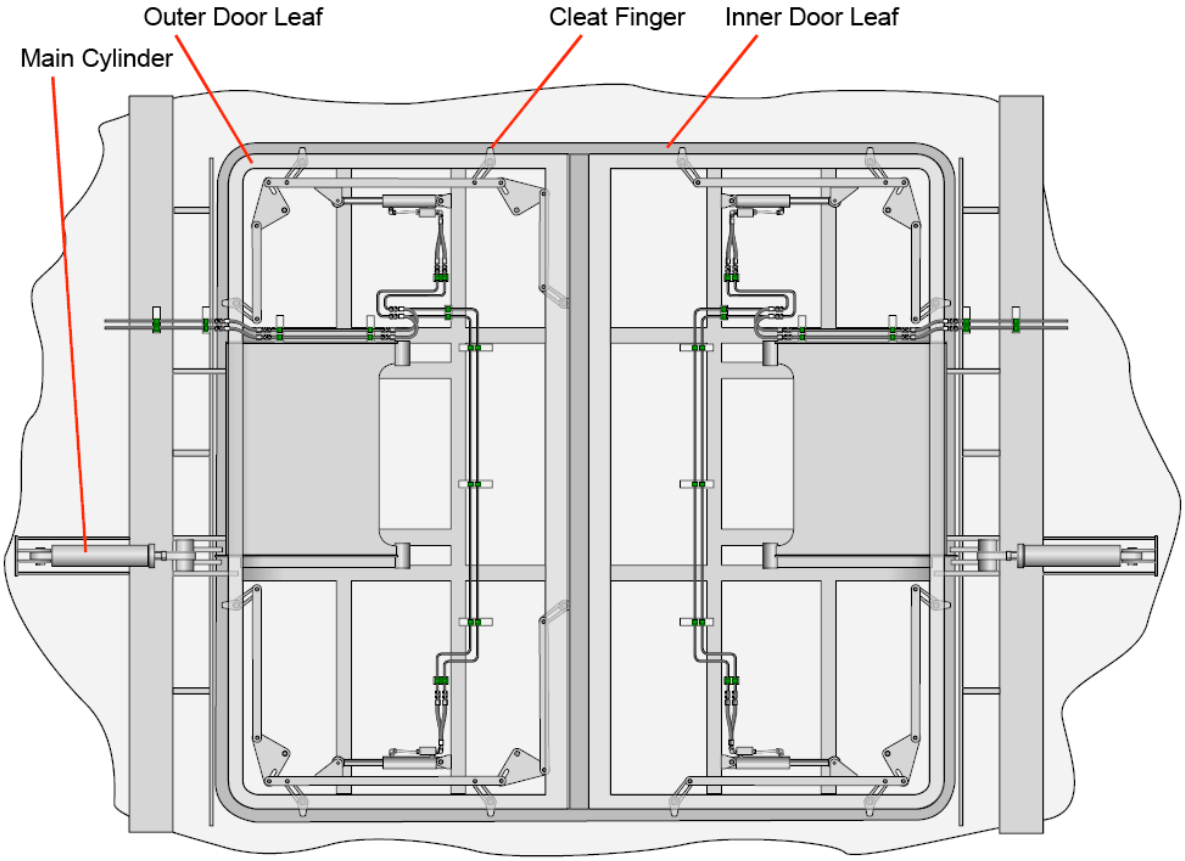

Illustration by courtesy of MacGREGOR Group

Z24
(cont)

Side Shell Door – double leaf, closed, top view

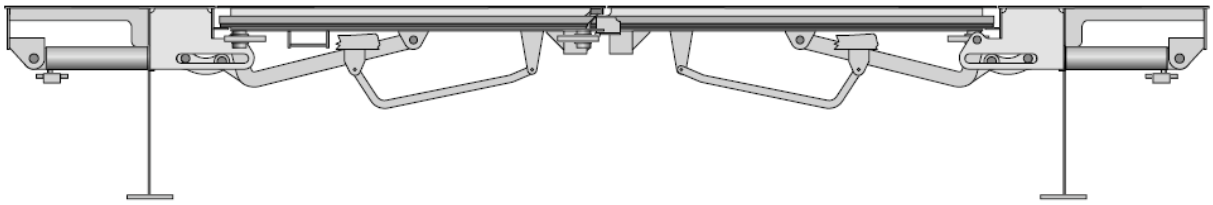

Illustration by courtesy of MacGREGOR Group

Side Shell Door – double leaf, fully opened, top view

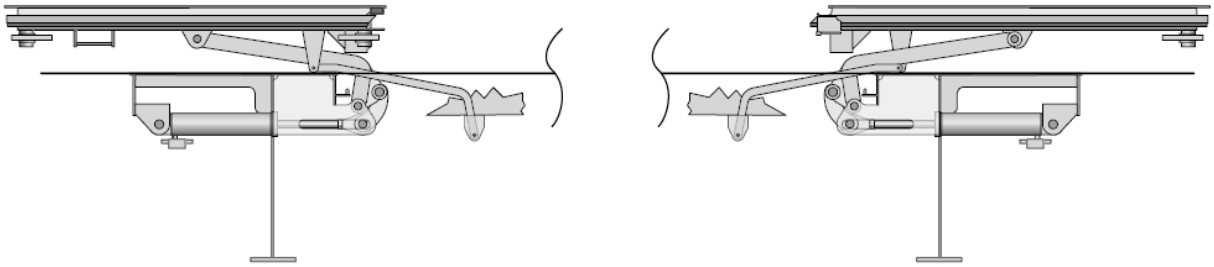

Illustration by courtesy of MacGREGOR Group

Side Shell Door – double leaf, half opened, top view

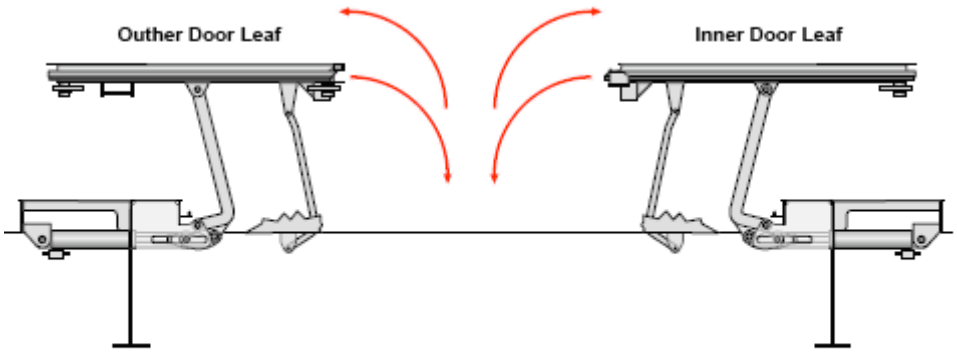

Illustration by courtesy of MacGREGOR Group

Z24
(cont)

Pilot Door – inside view

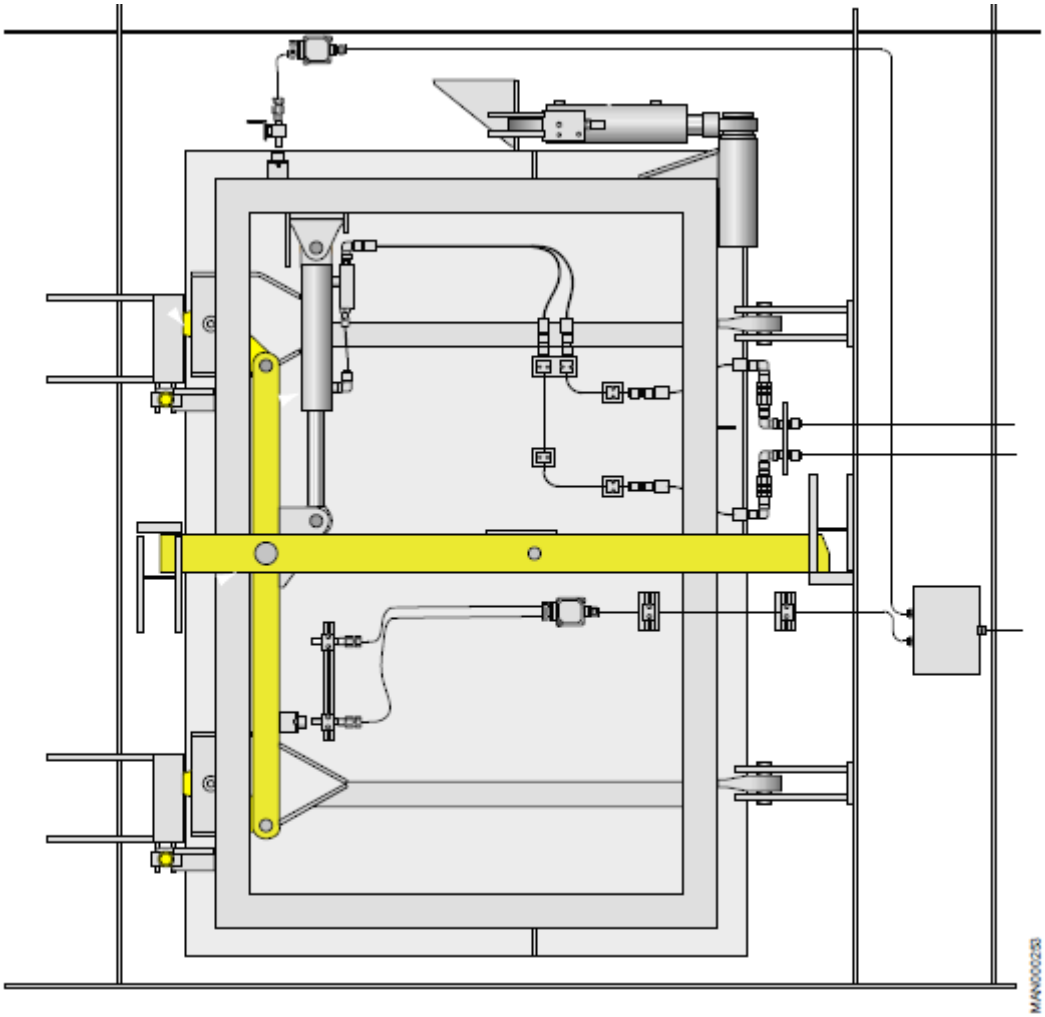

Illustration by courtesy of MacGREGOR Group

Z24
(cont)

Side Ramp – front view

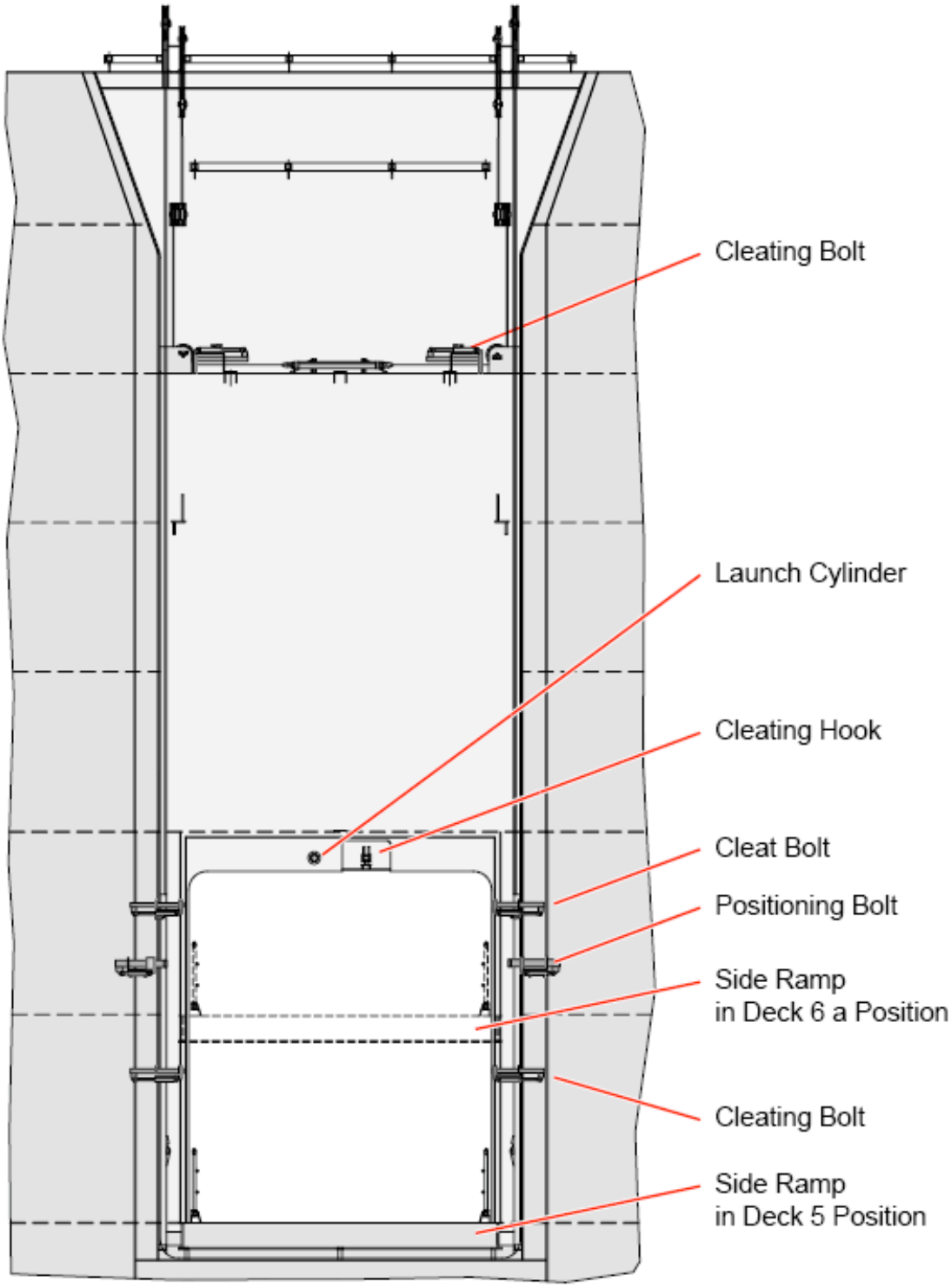

Illustration by courtesy of MacGREGOR Group

Z24
(cont)

Side Ramp – side view

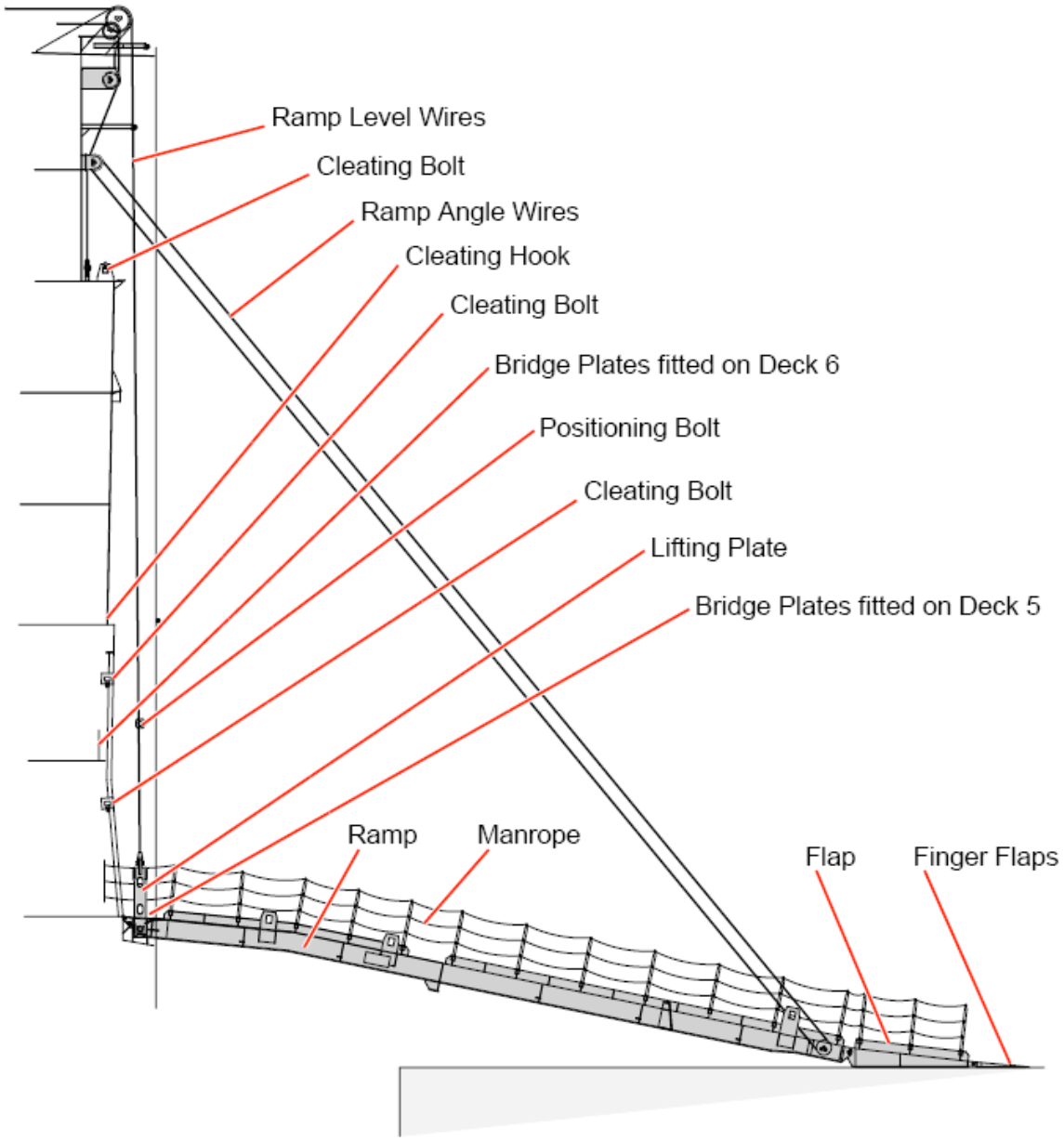

Illustration by courtesy of MacGREGOR Group

Z24
(cont)

Side Ramp – top view

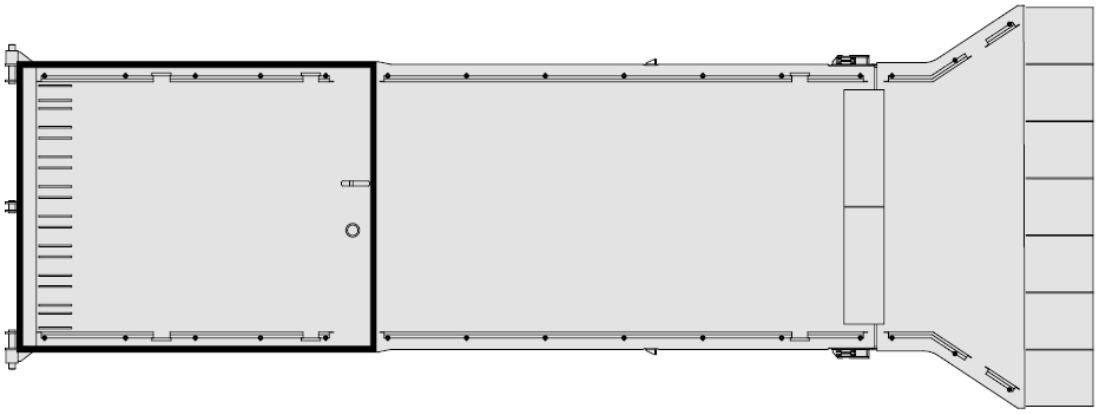

Illustration by courtesy of MacGREGOR Group

Stern Door – single leaf, closed, car carrier type

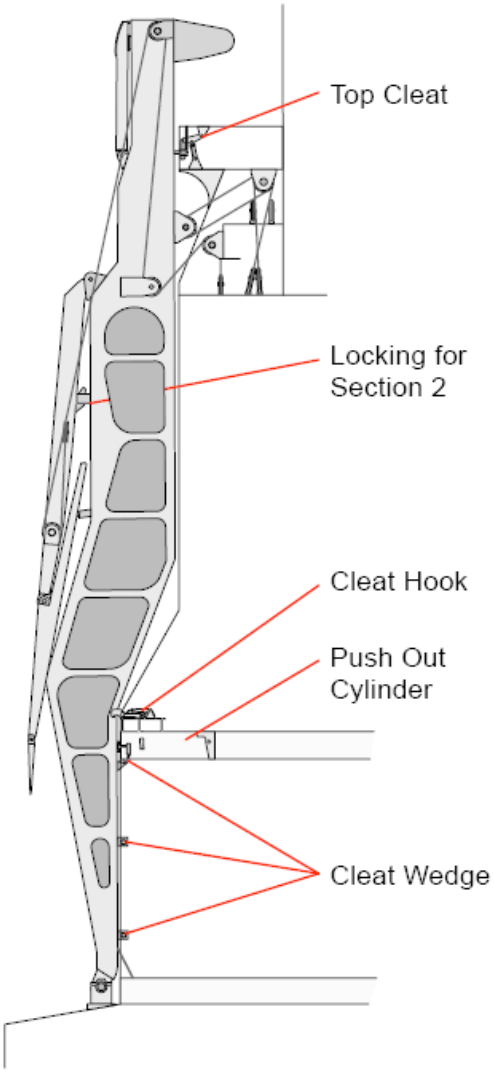

Illustration by courtesy of MacGREGOR Group

Z24
(cont)

Stern Door – single leaf, open, car carrier type, top view

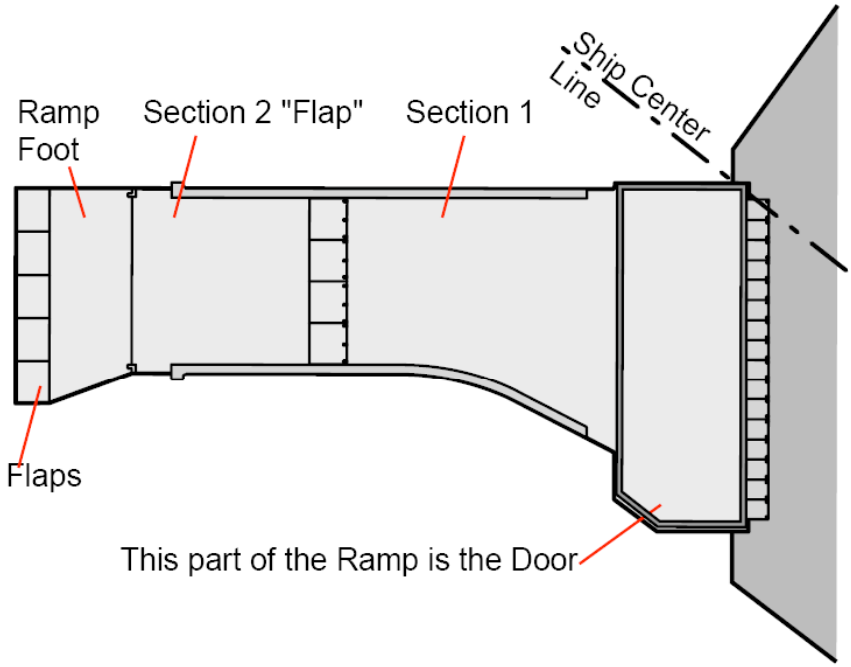

Illustration by courtesy of MacGREGOR Group

Stern Door – single leaf, open, car carrier type

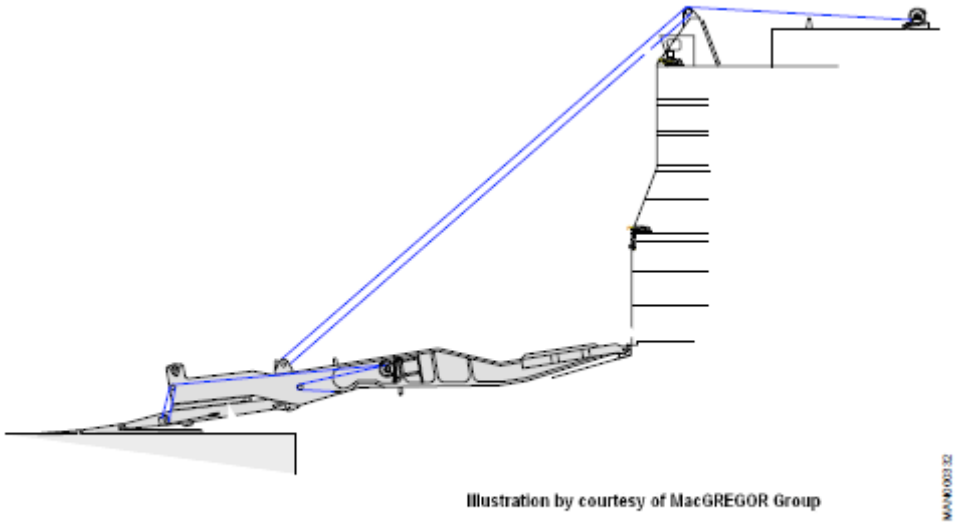

Z24
(cont)

Stern Door – double leaf, open, typical cleating arrangement

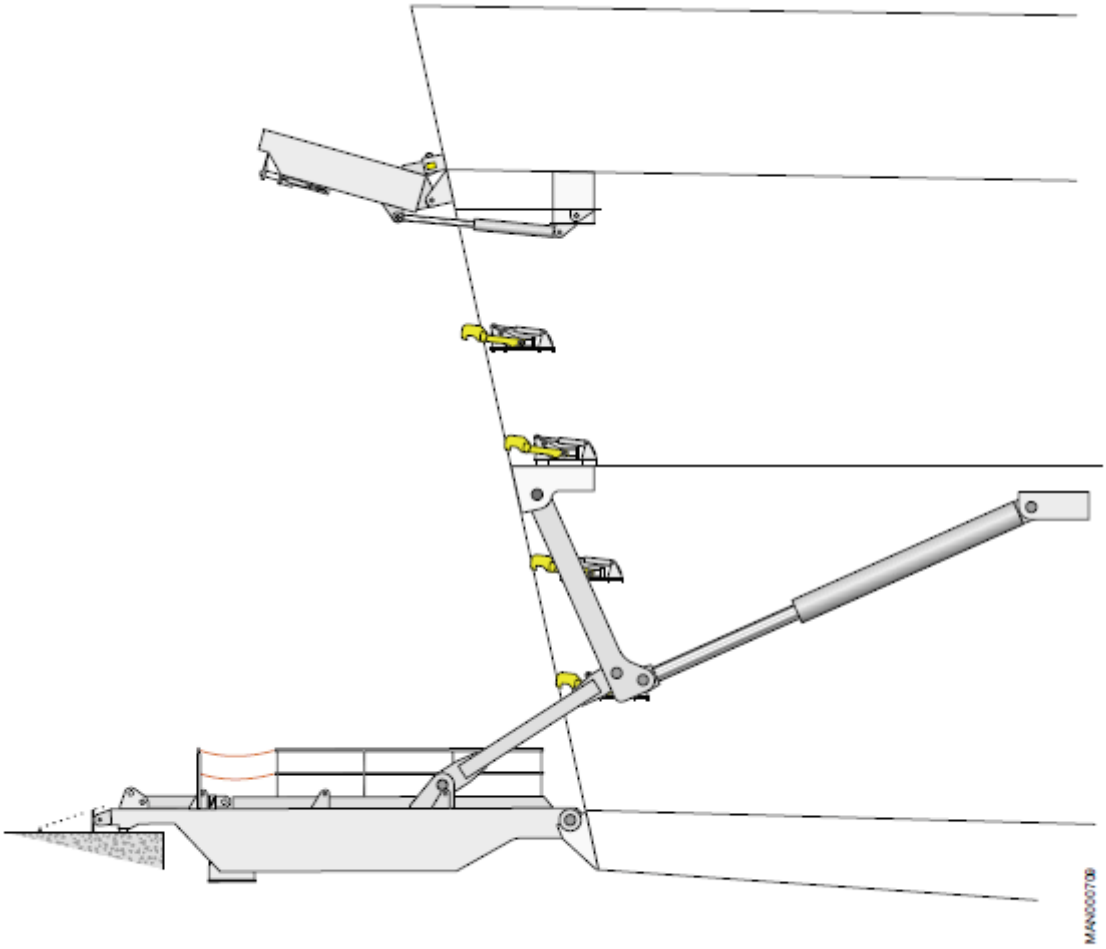

Illustration by courtesy of MacGREGOR Group

Z24
(cont)

Stern Door – single leaf, open typical cleating arrangement, type 1

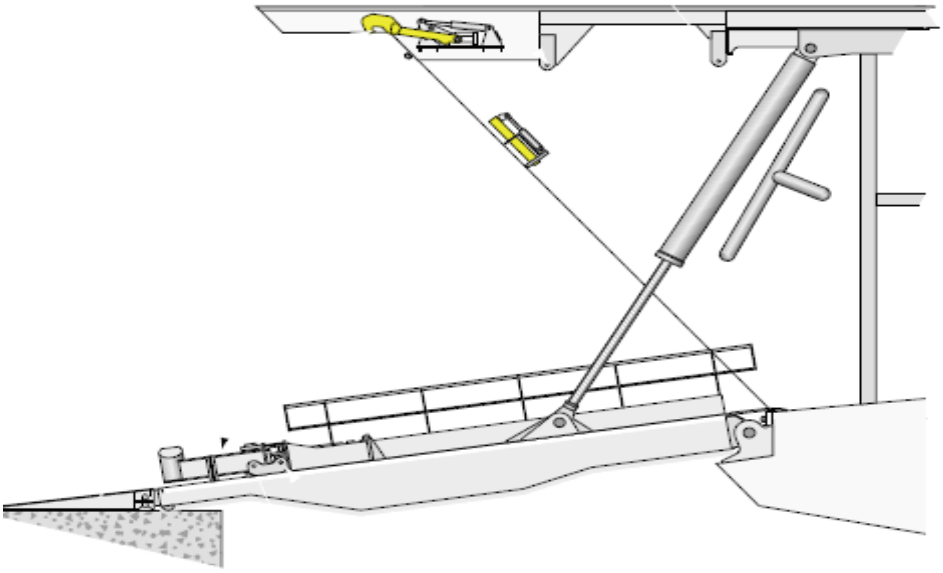

Illustration by courtesy of MacGREGOR Group

MAN00028

Stern Door – single leaf, open, typical cleating arrangement, type 2

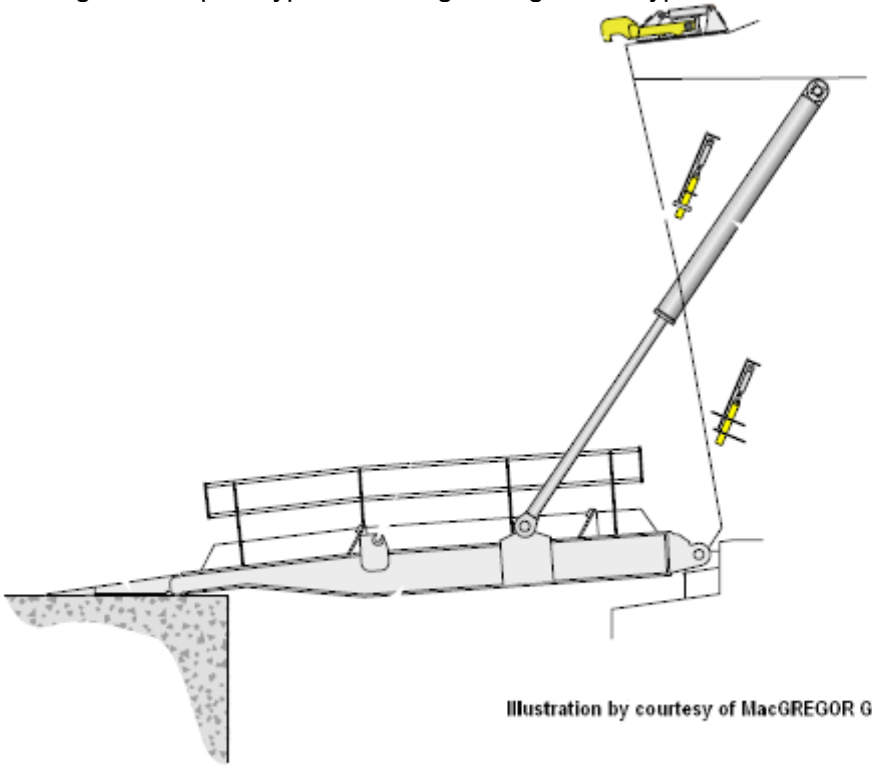

Illustration by courtesy of MacGREGOR Group

MAN001038

Z24
(cont)

Stern Door – single leaf, closed, inside view, typical cleating arrangement, type 3

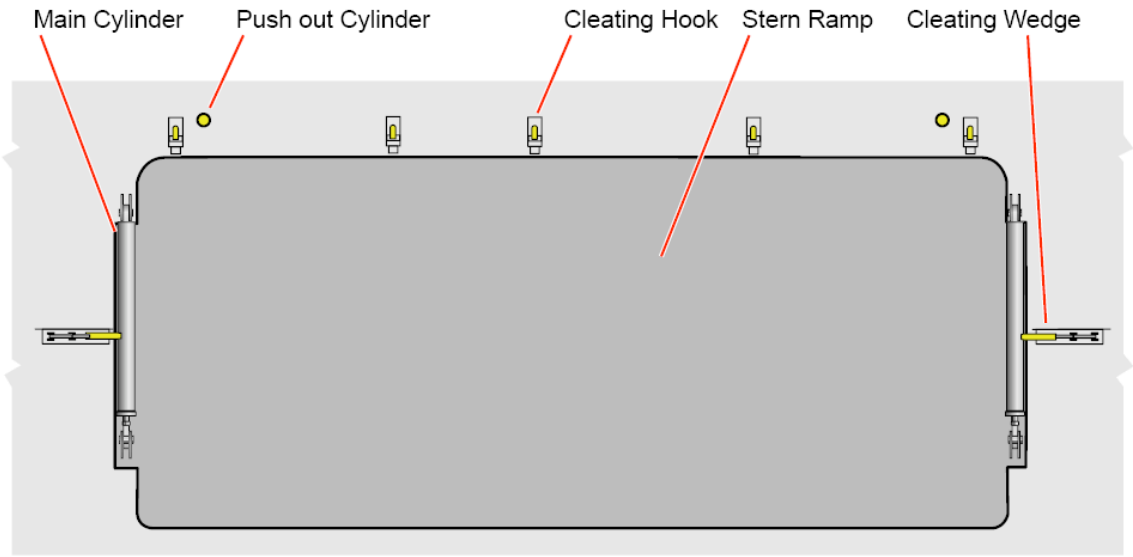

Illustration by courtesy of MacGREGOR Group

Z24
(cont)

Stern Door – single leaf, closed, typical cleating arrangement, type 3

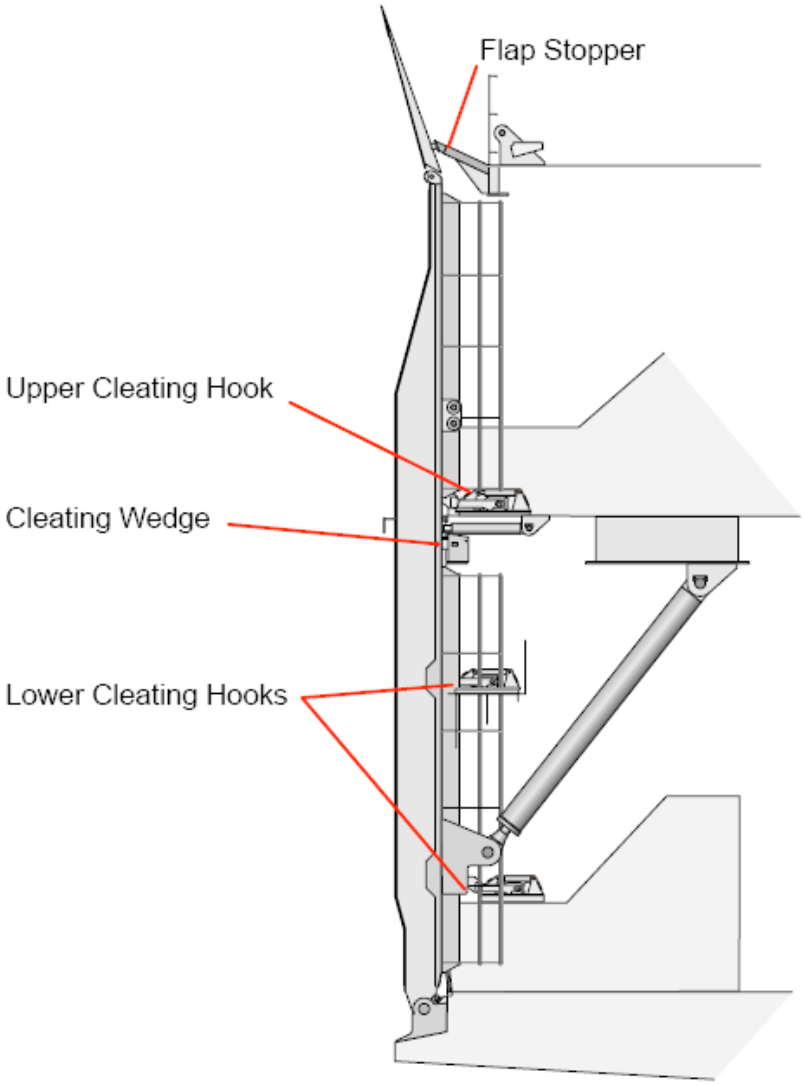

Illustration by courtesy of MacGREGOR Group

Z24
(cont)

Stern Door – single leaf, open, push-out cylinder arrangement

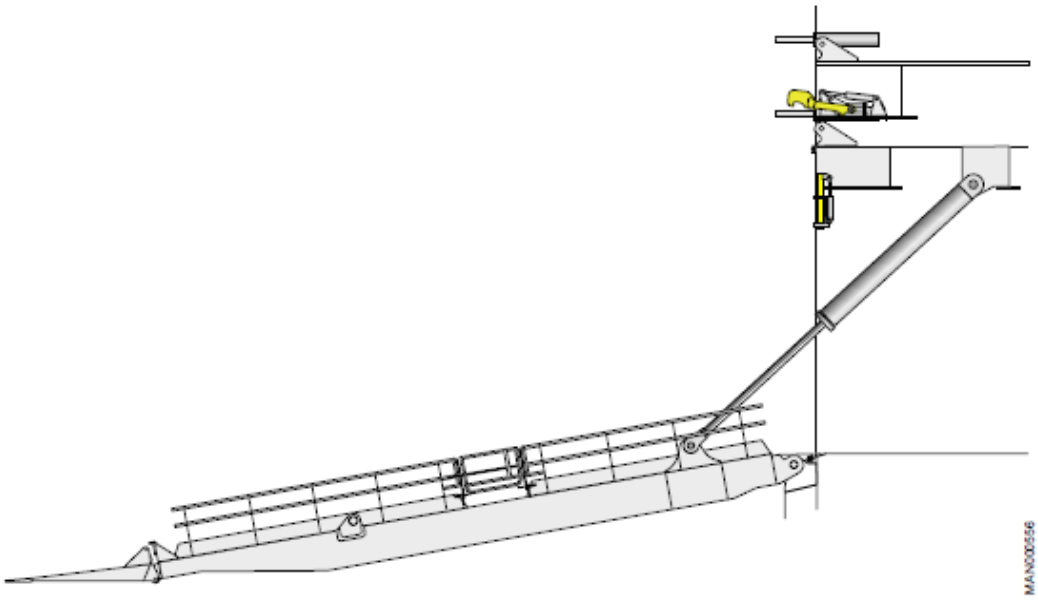

Illustration by courtesy of MacGREGOR Group

Stern Door – single leaf, open, typical cleating arrangement, type 3

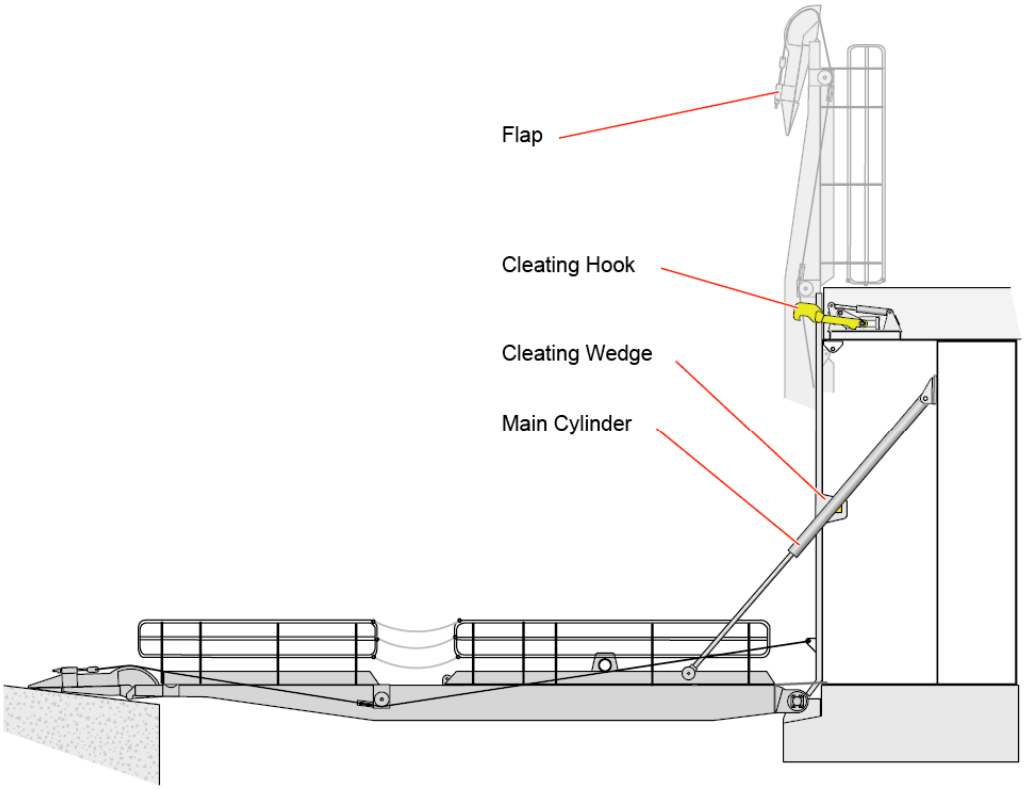

Illustration by courtesy of MacGREGOR Group

End of Document