Homework #3

ME551 Linear Vibration 2026

(Due date: 2026. 04. 10. Fri., 23:59)

T.A: Hyunwoo Song (songever5696@kaist.ac.kr)

1 (25 pts.) The support of the mass–damper–spring system shown in **Fig. 1** undergoes the harmonic motion $y(t) = A\sin\omega t$. Derive the system response of the magnitude and phase angle. (Gravity is neglected)

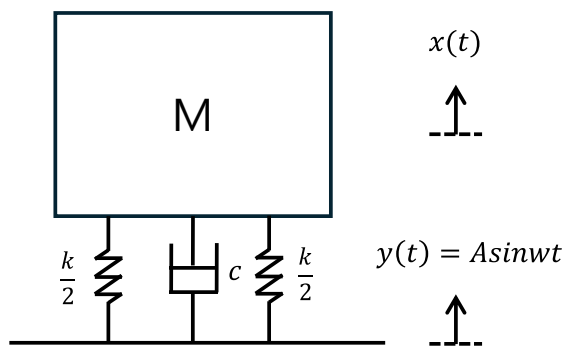

Figure 1. Mass–damper–spring system with base excitation

The equation of motion is:

$$M\ddot{x} + c(\dot{x} - \dot{y}) + k(x - y) = 0$$

$$M\ddot{x} + c\dot{x} + k\mathrm{x} = c\dot{y} + ky$$

$$M\ddot{x} + c\dot{x} + k\mathrm{x} = Acw\cos\omega t + Ak\sin\omega t$$

Letting $\sqrt{\frac{k}{m}} = \omega_n$ and $\zeta = \frac{c}{2m\omega_n}$,

$$\ddot{x} + 2\zeta\omega_n\dot{x} + \omega_n^2 x = 2\zeta\omega_n A\omega\cos\omega t + A\omega_n^2\sin\omega t$$

The right-hand side can be combined into a single harmonic:

$$2\zeta\omega_n A\omega\cos\omega t + A\omega_n^2\sin\omega t = A\omega_n^2\sqrt{1 + (2\zeta r)^2}\cos(\omega t - \alpha)$$

Where $r = \frac{\omega}{\omega_n}$, $\tan\alpha = \frac{1}{2\zeta r}$.

The solution of equation has the general form:

$x(t) = A|G(j\omega)|e^{j(\omega t-\varphi)}$

$x(t) = \frac{A\sqrt{1+(2\zeta r)^2}}{\sqrt{(1-r^2)^2+(2\zeta r)^2}}\cos(\omega t - \alpha - \varphi)$, $\tan\varphi = \frac{-ImG(j\omega)}{ReG(j\omega)} = \frac{2\zeta r}{1-r^2}$

(Magnitude) = $\frac{A\sqrt{1+(2\zeta r)^2}}{\sqrt{(1-r^2)^2+(2\zeta r)^2}}$

(Phase angle) = $\tan^{-1}(\frac{1}{2\zeta r}) + \tan^{-1}(\frac{2\zeta r}{1-r^2}) = \tan^{-1}(-\frac{(2\zeta r)^2+1-r^2}{2\zeta r^3})$

2 (25 pts.) Derive the response of a first-order system ($c\dot{x} + kx = f(t)$) to the periodic square-wave excitation shown in **Fig. 2**.

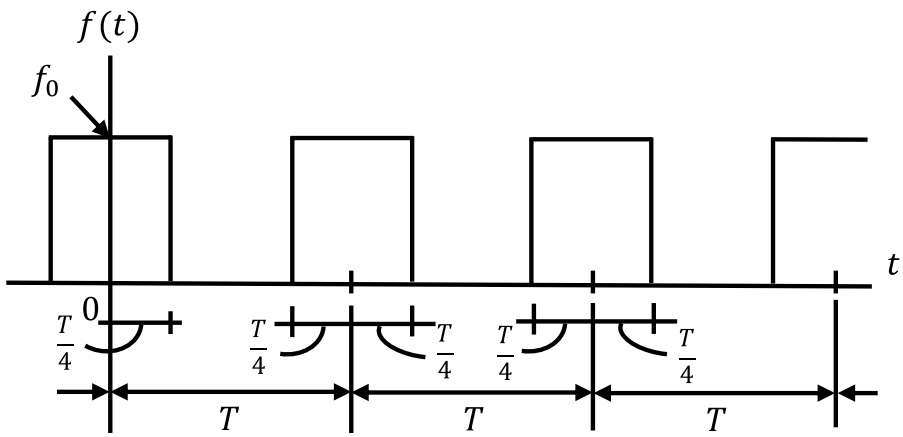

Figure 2. Periodic square-wave excitation

Periodic excitation in equations,

$$f(t) = \begin{cases} f_0, & -\frac{T}{4} < t < \frac{T}{4} \\ 0, & -\frac{T}{2} < t < -\frac{T}{4},\ \frac{T}{4} < t < \frac{T}{2} \end{cases}, f(t) = f(t+T)$$

Using a Fourier series,

$$f(t) = \frac{1}{2}A_0 + Re\sum_{p=1}^{\infty} A_p e^{jp\omega_0 t}, \omega_0 = \frac{2\pi}{T}$$

$$A_0 = \frac{2}{T}\int_{-T/2}^{T/2} f(t)dt = f_0$$

$$A_p = \frac{2}{T}\int_{-\frac{T}{2}}^{\frac{T}{2}} f(t)e^{-jp\omega_0 t}dt = \frac{2}{T}\int_{-\frac{T}{4}}^{\frac{T}{4}} f_0 e^{-jp\omega_0 t}dt$$

$$= \frac{2f_0}{T}\left\{\frac{1}{-jp\omega_0}\left(e^{\frac{-jp\omega_0 T}{4}} - e^{\frac{jp\omega_0 T}{4}}\right)\right\}$$

$$= \frac{2f_0}{T}\left(\frac{1}{jp\omega_0} * 2j * sin\frac{p\omega_0 T}{4}\right)$$

$$= \frac{2f_0}{p\pi} sin\frac{p\pi}{2}, \qquad p = 1,2,3 \ldots$$

The response $x(t) = |G(j\omega)|e^{j(\omega t - \varphi)}$ corresponds to the excitation in the complex form $f(t) = ke^{j\omega t}$

$$G(j\omega) = \frac{1}{1 + j\omega\tau}, \qquad |G(j\omega)| = \frac{1}{\sqrt{1 + (\omega\tau)^2}}, \qquad \varphi(\omega) = tan^{-1}\,\omega\tau\,, \qquad \tau = \frac{c}{k}$$

Thus, the response is

$$x(t) = \frac{f_0}{2k} + Re\sum_{p=1}^{\infty}\frac{A_p}{k}|G_p(jp\omega_0)|e^{j(p\omega_0 t - \varphi_p)}$$

$$x(t) = \frac{f_0}{2k} + \sum_{p=1}^{\infty}\frac{2f_0}{kp\pi}sin\frac{p\pi}{2}\frac{1}{\sqrt{1 + (2\pi p\tau/T)^2}}cos(pt\frac{2\pi p}{T}t - tan^{-1}(\frac{2\pi p\tau}{T}))$$

3 (25 pts.) Using the convolution integral, derive the response of the underdamped second-order system ($\zeta < 1$) with zero initial conditions, as described by Eq. (3.1), to the input shown in **Fig. 3.**

$$m\ddot{x} + c\dot{x} + kx = f(t) \tag{3.1}$$

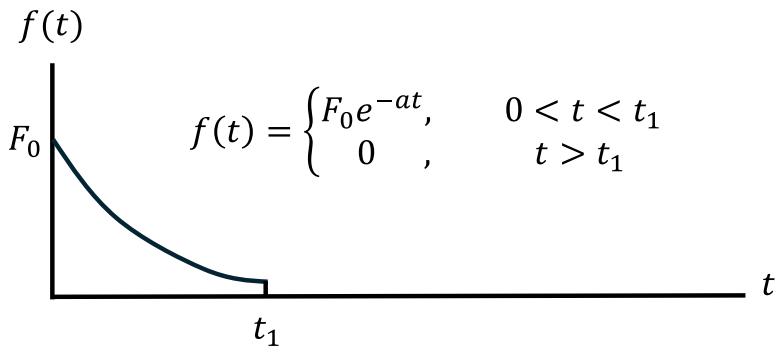

Figure 3. Input f(t)

For a second-order system, the unit impulse response $g(t)$ is

$$g(t) = \frac{1}{m\omega_d} e^{-\zeta\omega_n t} \sin \omega_d t \, u(t), \qquad \omega_d = \sqrt{1-\zeta^2}\omega_n$$

The convolution integral gives:

$$x(t) = \int_0^t f(\tau)h(t-\tau)d\tau = \frac{1}{m\omega_d}\int_0^t f(\tau)e^{-\zeta\omega_n(t-\tau)} sin\omega_d(t-\tau)d\tau$$

From a table of integrals,

$$\int_0^t e^{a\tau} \sin(b\tau)\, d\tau = \frac{e^{at}(a\sin bt - b\cos bt) + b}{a^2 + b^2}$$

i) $\quad 0 < t < t_1$

$$x(t) = \frac{1}{m\omega_d}\int_0^t f(\tau)e^{-\zeta\omega_n(t-\tau)} sin\omega_d(t-\tau)d\tau$$

$$= \frac{F_0}{m\omega_d} e^{-at}\int_0^t e^{-(\zeta\omega_n - a)(t-\tau)} sin\omega_d(t-\tau)d\tau$$

$$= \frac{F_0}{m\omega_d} e^{-at} * \frac{e^{-(\zeta\omega_n - a)t}(-(\zeta\omega_n - a)\sin\omega_d t - \omega_d \cos\omega_d t) + \omega_d}{(\zeta\omega_n - a)^2 + {\omega_d}^2}$$

$$= \frac{F_0}{m\omega_d((\zeta\omega_n - a)^2 + {\omega_d}^2)}\left[e^{-\zeta\omega_n t}(-(\zeta\omega_n - a)\sin\omega_d t - \omega_d\cos\omega_d t) + e^{-at}\omega_d\right]$$

ii) $t > t_1$

$$x(t) = \frac{1}{m\omega_d}\int_0^t f(\tau)e^{-\zeta\omega_n(t-\tau)}sin\omega_d(t-\tau)d\tau$$

$$= \frac{F_0}{m\omega_d}e^{-at}\int_0^{t_1} e^{-(\zeta\omega_n-a)(t-\tau)}sin\omega_d(t-\tau)d\tau$$

$$= \frac{F_0}{m\omega_d}e^{-at} * \left[\frac{e^{-(\zeta\omega_n-a)t}(-(\zeta\omega_n-a)\sin\omega_d t-\omega_d\cos\omega_d t)}{(\zeta\omega_n-a)^2+{\omega_d}^2}\right.$$

$$\left. -\frac{e^{-(\zeta\omega_n-a)(t-t_1)}\left(-(\zeta\omega_n-a)\sin\omega_d(t-t_1)-\omega_d\cos\omega_d(t-t_1)\right)}{(\zeta\omega_n-a)^2+{\omega_d}^2}\right]$$

4 (25 pts.) Derive the state vector for the system of **Problem 3** by the approach based on the transition matrix.

$$m\ddot{x} + c\dot{x} + kx = f(t)$$

$$\ddot{x} = -2\zeta\omega_n\dot{x} - \omega_n^2 x + f(t)/m$$

Converting to the state equation,

$$\frac{d}{dx}\begin{Bmatrix} x \\ \dot{x} \end{Bmatrix} = \begin{bmatrix} 0 & 1 \\ -\omega_n^2 & -2\zeta\omega_n \end{bmatrix}\begin{Bmatrix} x \\ \dot{x} \end{Bmatrix} + \begin{bmatrix} 0 \\ 1/m \end{bmatrix} f(t)$$

$$\mathbf{x} = \begin{Bmatrix} x \\ \dot{x} \end{Bmatrix}, \qquad \mathbf{A} = \begin{bmatrix} 0 & 1 \\ -\omega_n^2 & -2\zeta\omega_n \end{bmatrix}, \qquad \mathbf{b} = \begin{bmatrix} 0 \\ 1/m \end{bmatrix}$$

$$\dot{\mathbf{x}} = \mathbf{A}\mathbf{x}(t) + \mathbf{b}f(t)$$

The state response is given by

$$\mathbf{x}(\mathrm{t}) = \Phi(\mathrm{t})\mathbf{x}(0) + \int_0^t \Phi(\mathrm{t}-\tau)\mathbf{b}f(\tau)d\tau$$

Where $\Phi(\mathrm{t})$ is the state transition matrix, which can be obtained as follows:

$$\Phi(\mathrm{t}) = \mathcal{L}^{-1}(s\mathbf{I} - \mathbf{A})^{-1} = \mathcal{L}^{-1}\begin{bmatrix} s & -1 \\ \omega_n^2 & \mathrm{s} + 2\zeta\omega_n \end{bmatrix}^{-1}$$

$$= \mathcal{L}^{-1}\frac{1}{s^2 + 2\zeta\omega_n \mathrm{s} + \omega_n^2}\begin{bmatrix} s + 2\zeta\omega_n & 1 \\ -\omega_n^2 & \mathrm{s} \end{bmatrix}$$

$$= e^{\boldsymbol{A}t} = \frac{e^{-\zeta\omega_n t}}{\omega_d}\begin{bmatrix} \omega_d cos\omega_d t + \zeta\omega_n sin\omega_d t & sin\omega_d t \\ -\omega_n^2 sin\omega_d t & \omega_d cos\omega_d t - \zeta\omega_n sin\omega_d t \end{bmatrix}$$

Letting $\mathbf{x}(0) = \mathbf{0}$, the response $x(t)$ for the exponential input has the same integral as in **Problem 3**.

$$\mathbf{x}(\mathrm{t}) = \frac{e^{-\zeta\omega_n t}}{m\omega_d}\int_0^t e^{-\zeta\omega_n(\mathrm{t}-\tau)}\begin{bmatrix} sin\omega_d(\mathrm{t}-\tau) \\ \omega_d cos\omega_d(\mathrm{t}-\tau) - \zeta\omega_n sin\omega_d(\mathrm{t}-\tau) \end{bmatrix} f(\tau)d\tau$$

$$x(\mathrm{t}) = \frac{1}{m\omega_d}\int_0^t f(\tau)e^{-\zeta\omega_n(t-\tau)}sin\omega_d(t-\tau)d\tau$$

The remaining integration steps are the same as in **Problem 3**.