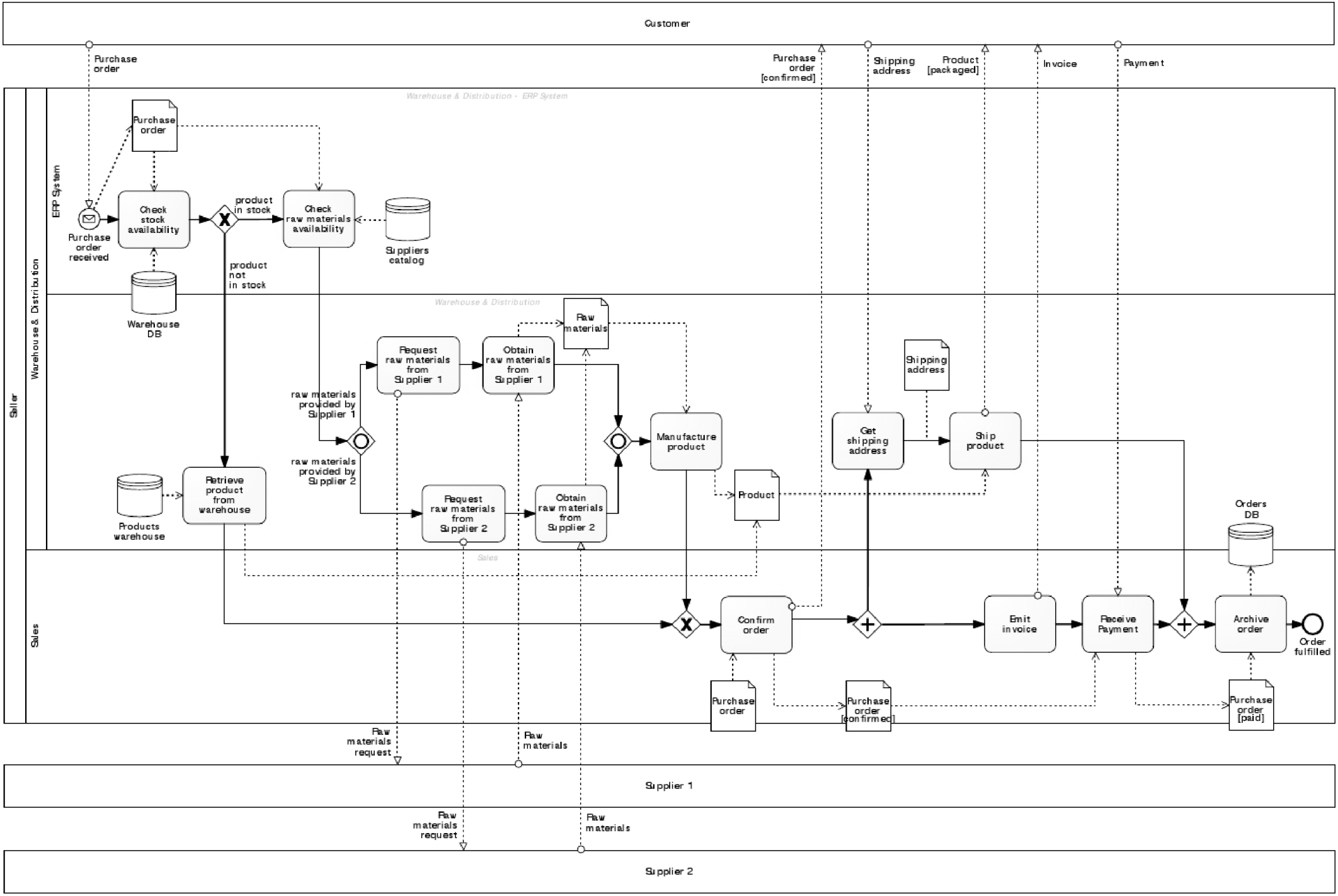
Customer
Purchase order
Purchase order [confirmed]
Shipping address
Product [packaged]
Invoice
Payment
Seller
Warehouse & Distribution
ERP System
Warehouse & Distribution - ERP System
Purchase order
Purchase order received
Check stock availability
product in stock
product not in stock
Check raw materials availability
Suppliers catalog
Warehouse DB
Warehouse & Distribution
Raw materials
Request raw materials from Supplier 1
Obtain raw materials from Supplier 1
raw materials provided by Supplier 1
raw materials provided by Supplier 2
Request raw materials from Supplier 2
Obtain raw materials from Supplier 2
Manufacture product
Product
Shipping address
Get shipping address
Ship product
Retrieve product from warehouse
Products warehouse
Sales
Orders DB
Confirm order
Emit invoice
Receive Payment
Archive order
Order fulfilled
Purchase order
Purchase order [confirmed]
Purchase order [paid]
Raw materials request
Raw materials
Supplier 1
Raw materials request
Raw materials
Supplier 2